Public Service Commission of South Carolina
Tariff Summary Sheet as of November 27, 2013

Horry Telephone Cooperative, Inc.

Tariff Service: Access (formerly HTC Communications, Inc.)

This document is the complete version of the tariff on file and contains the following approved revisions. Detailed information is available for each revision on the Commission's E Tariff website (http://etariff.psc.sc.gov).

Revision	Date Filed	Effective Date	# of Pages
E2013-418	11/18/13	12/10/13	63
Summary: Amend pages to delete any reference to Common Language or Common Language data elements.			
E2013-289	7/26/13	8/15/13	88
Summary: This tariff filing cancels and replaces E2013-287 filed on 7/23/13. This tariff filing removes specific Network Channel (NC) and Network Channel Interface (NCI) codes in Section 9 and Section 11 and replaces with applicable technical reference document identification numbers. This tariff filing also removes Frame Relay service and its applicable terms and conditions in Section 10, Section 12, and the Price List.			
E2012-215	6/15/12	7/5/12	9
Summary: This filing proposes the addition of tariff language for implementation of the intercarrier compensation regime for certain VoIP-PSTN traffic as mandated in the Federal Communications Commission's November 18, 2011 Report and Order and Further Notice of Proposed Rulemaking in WC Docket Nos. 10-90, etc. (FCC 11-161). This filing also proposes intrastate access tariff reductions, to be effective July 3, 2012, pursuant to the FCC's November 18, 2011 Report and Order and Further Notice of Proposed Rulemaking in WC Docket Nos. 10-90, etc. (FCC 11-161). The Transitional Intrastate Access Service reductions proposed herein are as required by 47 C.F.R. §51.907(b).			

ACCESS SERVICE

Rates, Terms and Conditions
applying to the provision of intrastate access
and point to point service within the State of South Carolina
by HTC Communications, Inc.

Access Services are provided by means of wire, fiber optics, radio or any other suitable technology or a combination thereof.

This Tariff contains regulations and rates applicable for the furnishing of Access Services associated with the above services offered by Horry Telephone Cooperative, Inc., hereinafter referred to as HTC Communications, Inc. ("Company"), within this State. This Tariff is on file with the Public Service Commission of South Carolina. (C)

ACCESS SERVICE

CHECK SHEET

The title page and pages 1 through 12-23 and Price Sheet 1 through Price Sheet 9 inclusive of this Tariff are effective as of the dates shown. Original and revised pages, as named below, comprise all changes from the original Tariff in effect on the date indicated.

Page	Revision	Page	Revision	Page	Revision	Page	Revision
1	2nd*	1-1	1st*	3-2	1st*	7-4	Original
2	2nd*	1-2	1st*	3-3	1st*	7-5	Original
3	5th*	1-3	1st*	3-4	1st*	7-6	Original
4	Original	1-4	1st*	3-5	1st*	7-7	Original
5	Original	1-5	1st*	3-6	1st*	7-8	Original
6	Original	2-1	Original	3-7	1st*	7-9	Original
7	Original	2-2	Original	3-8	Original	7-10	Original
8	Original	2-3	Original	4-1	Original	7-11	Original
9	Original	2-4	Original	4-2	Original	8-1	Original
10	2nd*	2-5	Original	4-3	Original	8-2	Original
11	1st	2-6	Original	4-4	Original	8-3	Original
12	1st	2-7	Original	4-5	1st	8-4	Original
13	Original	2-8	Original	4-6	Original	8-5	Original
14	Original	2-9	Original	4-7	Original	8-6	Original
		2-10	Original	4-8	Original	8-7	Original
		2-11	Original	4-9	Original	8-8	Original
		2-12	Original	4-10	Original	8-9	Original
		2-13	Original	4-11	Original	8-10	Original
		2-14	Original	4-12	Original	8-11	Original
		2-15	Original	4-13	Original	8-12	Original
		2-16	Original	4-14	Original	8-13	Original
		2-17	Original	4-15	Original	8-14	Original
		2-18	Original	4-16	Original	8-15	Original
		2-19	Original	4-17	Original	8-16	Original
		2-20	Original	4-18	1st*	8-17	Original
		2-21	Original	4-18.1	Original	8-18	Original
		2-22	Original	4-19	Original	8-19	Original
		2-23	Original	4-20	1st*	8-20	Original
		2-24	Original	4-21	Original	8-21	Original
		2-25	Original	5-1	Original	8-22	Original
		2-26	Original	6-1	Original	8-23	Original
		2-27	Original	6-2	Original	8-24	Original
		2-28	Original	7-1	Original	8-25	Original
		3-1	1st*	7-2	Original	8-26	Original
				7-3	Original		

ACCESS SERVICE

CHECK SHEET (Cont'd)

Page	Revision	Page	Revision	Page	Revision
8-27	Original	8-61	Original	9-27	Original
8-28	Original	8-62	Original	9-28	Original
8-29	Original	8-63	Original	9-29	Original
8-30	Original	8-64	Original	9-30	Original
8-31	Original	8-65	Original	9-31	2nd*
8-32	Original	8-66	Original	9-32	2nd*
8-33	Original	8-67	Original	9-33	2nd*
8-34	Original	8-68	Original	9-34	Original
8-35	Original	9-1	Original	9-35	Original
8-36	Original	9-2	Original	9-36	Original
8-37	Original	9-3	Original	9-37	Original
8-38	Original	9-4	1st	9-38	2nd*
8-39	Original	9-5	1st	9-39	1st*
8-40	Original	9-6	Original	9-40	Original
8-41	Original	9-7	Original	9-41	2nd*
8-42	Original	9-8	Original	9-42	1st
8-43	Original	9-9	1st	9-43	2nd
8-44	Original	9-10	Original	9-44	2nd*
8-45	Original	9-11	Original	9-45	1st
8-46	Original	9-12	Original	9-46	1st
8-47	Original	9-13	Original	9-47	Original
8-48	Original	9-14	Original	9-48	2nd*
8-49	Original	9-15	Original	9-49	Original
8-50	Original	9-16	Original	9-50	Original
8-51	Original	9-17	Original	9-51	1st*
8-52	Original	9-18	Original	9-52	1st*
8-53	Original	9-19	Original	9-53	Original
8-54	Original	9-20	Original	9-54	2nd*
8-55	Original	9-21	Original	9-55	Original
8-56	Original	9-22	Original	9-56	Original
8-57	Original	9-23	Original	9-57	Original
8-58	Original	9-24	Original	9-58	Original
8-59	Original	9-25	Original		
8-60	Original	9-26	Original		

ACCESS SERVICE

CHECK SHEET (Cont'd)

Page	Revision	Page	Revision	Page	Revision	Page	Revision
10-1	1st	11-15	Original	11-49	2nd*	Price Sheet 1	Original
10-2	1st	11-16	Original	11-50	2nd*	Price Sheet 2	Original
10-3	1st	11-17	Original	11-51	2nd*	Price Sheet 3	Original
10-4	1st	11-18	Original	11-52	2nd*	Price Sheet 4	Original
10-5	1st	11-19	Original	11-53	2nd*	Price Sheet 5	Original
10-6	1st	11-20	1st	11-54	2nd*	Price Sheet 6	Original
10-7	1st	11-21	Original	11-55	2nd*	Price Sheet 7	Original
10-8	1st	11-22	Original	11-56	2nd*	Price Sheet 8	1st
10-9	1st	11-23	Original	11-57	2nd*	Price Sheet 9	1st
10-10	1st	11-24	2nd*	11-58	1st		
10-11	1st	11-25	1st	11-59	Original		
10-12	1st	11-26	1st	12-1	1st		
10-13	1st	11-27	2nd*	12-2	2nd		
10-14	1st	11-28	2nd*	12-3	1st		
10-15	1st	11-29	2nd*	12-4	2nd		
10-16	1st	11-30	2nd*	12-5	1st		
10-17	1st	11-31	2nd*	12-6	1st		
10-18	1st	11-32	2nd*	12-7	1st		
10-19	1st	11-33	2nd*	12-8	1st		
10-20	1st	11-34	2nd*	12-9	1st		
11-1	1st	11-35	2nd*	12-10	1st		
11-2	Original	11-36	2nd*	12-11	1st		
11-3	Original	11-37	2nd*	12-12	1st		
11-4	Original	11-38	2nd*	12-13	1st		
11-5	Original	11-39	2nd*	12-14	1st		
11-6	Original	11-40	2nd*	12-15	1st		
11-7	1st	11-41	2nd*	12-16	1st		
11-8	1st	11-42	2nd*	12-17	1st		
11-9	1st	11-43	2nd*	12-18	1st		
11-10	1st	11-44	2nd*	12-19	1st		
11-11	1st	11-45	2nd*	12-20	1st		
11-12	1st	11-46	2nd*	12-21	2nd*		
11-13	1st	11-47	2nd*	12-22	2nd*		
11-14	Original	11-48	2nd*	12-23	2nd*		

*Issued November 19, 2013

ACCESS SERVICE

TABLE OF CONTENTS

CHECK SHEET 1

CONCURRING CARRIERS 13

CONNECTING CARRIERS 13

OTHER PARTICIPATING CARRIERS 13

REGISTERED SERVICEMARKS 13

REGISTERED TRADEMARKS 13

EXPLANATION OF SYMBOLS 13

APPLICATION OF TARIFF 12

1. DEFINITIONS 1-1

2. REGULATIONS 2-1

2.1 Undertaking of the Company 2-1

2.1.1 Scope 2-1
2.1.2 Shortage of Equipment or Facilities 2-1
2.1.3 Terms and Conditions 2-1
2.1.4 Liability of the Company 2-2
2.1.5 Notification of Service-Affecting Activities 2-6
2.1.6 Provision of Equipment & Facilities 2-6
2.1.7 Non-Routine Installation 2-8
2.1.8 Special Construction 2-8
2.1.9 Ownership of Facilities 2-9

2.2 Prohibited Uses 2-9

2.3 Obligations of the Customer 2-9

2.3.1 The Customer shall be responsible for 2-9
2.3.2 Claims 2-11
2.3.3 Jurisdictional Reporting 2-11

2.4 Customer Equipment and Channels 2-14

2.4.1 In General 2-14
2.4.2 Interconnection of Facilities 2-14

ACCESS SERVICE

TABLE OF CONTENTS (Cont'd)

2.5 Payment Arrangements....2-14

2.5.1 Payment for Service....2-14
2.5.2 Billing and Collection of Charges....2-15
2.5.3 Deposits....2-20
2.5.4 Refusal and Discontinuance of Service....2-21
2.5.5 Cancellation of Application for Service....2-25

2.6 Allowances for Interruptions in Service....2-25

2.6.1 Credit for Interruptions....2-25
2.6.2 Limitations on Allowances....2-26
2.6.3 Cancellation for Service Interruption....2-27

2.7 Cancellation of Service....2-27
2.8 Transfers and Assignments....2-27
2.9 Notices and Communications....2-28
2.10 Unlawful and Abusive Use....2-28

3. ORDERING OPTIONS FOR SWITCHED AND SPECIAL ACCESS SERVICE....3-1

3.1 General....3-1

3.1.1 Ordering Conditions....3-1
3.1.2 Provision of Other Services....3-2

3.2 Access Order....3-2

3.2.1 Access Service Date Intervals....3-3
3.2.2 Access Service Request Modifications....3-4
3.2.3 Cancellation of an Access Service Request....3-7
3.2.4 Minimum Period of Service....3-7

4. SWITCHED ACCESS SERVICE....4-1

4.1 General....4-1
4.2 Provision and Description of Switched Access Service Arrangements....4-1

4.2.1 Feature Group D (FGD) Access....4-1
4.2.2 Manner of Revision....4-3
4.2.3 Rate Categories....4-3
4.2.4 Descriptions & Application of Rate....4-18
4.2.5 Billing Validation Service....4-20
4.2.6 Acceptance Testing....4-20
4.2.7 Ordering Options and Conditions....4-20

ACCESS SERVICE

TABLE OF CONTENTS (Cont'd)

4.3 Obligations of the Company....4-21

4.3.1 Network Management....4-21

5. SPECIAL CONSTRUCTION 5-1

5.1 Special Construction....5-1

5.1.1 Basis for Rates and Charges 5-1
5.1.2 Termination Liability 5-1

5.2 Individual Case Basis Arrangement 5-1

6. BILLING NAME AND ADDRESS....6-1

6.1 Undertaking of the Company 6-1
6.2 Obligations of the Customer....6-1

7. DIRECTORY ASSISTANCE SERVICE 7-1

7.1 General Description 7-1

7.1.1 Description and Provision of Directory Assistance Service 7-1
7.1.2 Rate Categories 7-2
7.1.3 Special Facilities Routing 7-4
7.1.4 Design Layout Report 7-4

7.2 Undertaking of the Telephone Company 7-5

7.2.1 Number of Telephone Requests....7-5
7.2.2 Telephone Number Availability....7-5
7.2.3 Selection of DA Locations....7-5
7.2.4 Transmission Specifications 7-5
7.2.5 Testing 7-6
7.2.6 Determination of Number of Transmission Paths....7-6
7.2.7 Supervisory Signaling....7-6

7.3 Obligations of the Customer....7-7

7.3.1 Jurisdictional Reports 7-7
7.3.2 Supervisory Signaling....7-7
7.3.3 Ordering of Separate Trunk Groups 7-7
7.3.4 Notice of Discontinuance of Service 7-7

ACCESS SERVICE

TABLE OF CONTENTS (Cont'd)

7.4 Rate Regulations 7-8

7.4.1 Non Recurring Charges 7-8
7.4.2 Directory Assistance Service Call Charge 7-8
7.4.3 Transport Service 7-9
7.4.4 Minimum Periods 7-9
7.4.5 Minimum Monthly Charge 7-10
7.4.6 DA Service Rearrangements 7-10
7.4.7 Moves 7-10
7.4.8 Credit Allowance for Service Outages and Incorrect Numbers 7-11

8. BILLING AND COLLECTIONS SERVICES 8-1

8.1 Recording Service 8-2

8.1.1 General Description 8-3
8.1.2 Undertaking of the Company 8-4
8.1.3 Liability of the Company 8-6
8.1.4 Obligations of the IC 8-7
8.1.5 Payment Arrangements and Audit Provision 8-8
8.1.6 Rate Regulations 8-10

8.2 Billing Service 8-10

8.2.1 Message Billing Service 8-11
8.2.2 Purchase of Accounts Receivable 8-45

8.3 Billing Information Service 8-58

8.3.1 General Description 8-58
8.3.2 Undertaking of the Company 8-58
8.3.3 Liability of the Company 8-65
8.3.4 Obligations of the IC 8-65
8.3.5 Payment Arrangements 8-66
8.3.6 Rate Regulations 8-67

ACCESS SERVICE

TABLE OF CONTENTS (Cont'd)

9. SPECIAL ACCESS SERVICE 9-1

9.1 General 9-1

9.1.1 Channel Types 9-1
9.1.2 Service Descriptions 9-4
9.1.3 Service Configurations 9-6
9.1.4 Alternate Use 9-13
9.1.5 Special Facilities Routing 9-13
9.1.6 Design Layout Report 9-13
9.1.7 Acceptance Testing 9-14
9.1.8 Ordering Options and Conditions 9-14

9.2 Rate Regulations 9-15

9.2.1 Rate Categories 9-15
9.2.2 Types of Rates and Charges 9-20
9.2.3 Moves 9-24
9.2.4 Minimum Periods 9-25
9.2.5 Mileage Measurement 9-26
9.2.6 Facility Hubs 9-27

9.3 Surcharge For Special Access Service 9-30

9.3.1 General 9-30

9.4 Metallic Service 9-31

9.4.1 Basic Channel Description 9-31
9.4.2 Technical Specifications Packages and Network Channel Interfaces 9-31
9.4.3 Optional Features and Functions 9-31

9.5 Telegraph Grade Service 9-32

9.5.1 Basic Channel Description 9-32
9.5.2 Technical Specifications Packages and Network Channel Interfaces 9-32
9.5.3 Optional Features and Functions 9-32

ACCESS SERVICE

TABLE OF CONTENTS (Cont'd)

9.6 Voice Grade Service 9-33

9.6.1 Basic Channel Description 9-33
9.6.2 Technical Specifications Packages and Network Channel Interfaces 9-33
9.6.3 Optional Features and Functions 9-33

9.7 Program Audio Service 9-41

9.7.1 Basic Channel Description 9-41
9.7.2 Technical Specifications Packages and Network Channel Interfaces 9-41
9.7.3 Optional Features and Functions 9-41

9.8 Video Service 9-43

9.8.1 Basic Channel Description 9-43
9.8.2 Technical Specifications Packages and Network Channel Interfaces 9-43

9.9 Digital Data Service 9-44

9.9.1 Basic Channel Description 9-44
9.9.2 Technical Specifications Packages and Network Channel Interfaces 9-44
9.9.3 Optional Features and Functions 9-45

9.10 High Capacity Service 9-47

9.10.1 Basic Channel Description 9-47
9.10.2 Technical Specifications Packages and Network Channel Interfaces 9-48
9.10.3 Optional Features and Functions 9-49

9.11 Synchronous Optical Channel Service 9-53

9.11.1 Basic Channel Description 9-53
9.11.2 Network Channel Interfaces 9-54
9.11.3 Optional Features and Functions 9-55

9.12 Individual Case Filings 9-58

ACCESS SERVICE

TABLE OF CONTENTS (Cont'd)

10. RESERVED FOR FUTURE USE 10-1

10.1 (D)

10.1.1
10.1.2
10.1.3 (D)

11. ACCESS SERVICE INTERFACES AND TRANSMISSION SPECIFICATIONS 11-1

11.1 Switched Access Service 11-1

11.1.1 Local Transport Interface Groups 11-1
11.1.2 Standard Transmission Specifications 11-11
11.1.3 Data Transmission Parameters 11-20

11.2 Special Access Service 11-24

11.2.1 Network Channel Codes ..... 11-27 (T)
11.2.2 Network Channel Interface Codes 11-37

11.3 Directory Access Service 11-58

11.3.1 Interface Group and Premise Interface Codes 11-58
11.3.2 Standard Transmission Specifications 11-59

ACCESS SERVICE

TABLE OF CONTENTS (Cont'd)

12. RATES AND CHARGES 12-1

12.1 Access Ordering 12-1

12.1.1 Access Order Charge 12-1
12.1.2 Service Date Change Charge 12-1
12.1.3 Design Change Charge 12-1
12.1.4 Expedited Order Charge 12-1
12.1.5 Cancellation Charge 12-1
12.1.6 Miscellaneous Service Order Charge 12-1

12.2 Switched Access Service 12-2

12.2.1 Local Transport 12-2
12.2.2 End Office 12-3
12.2.3 Nonrecurring Charges ..... 12-4 (Z)
12.2.4 Common Channel Signaling Network Connection 12-5

12.3 Billing Name and Address 12-6

12.3.1 Usage Rates 12-6

12.4 Directory Assistance Service 12-7

12.4.1 Directory Assistance Service 12-7
12.4.2 Directory Access Service Per Call 12-7
12.4.3 Credit Allowance for Uncompleted DA Calls 12-7

ACCESS SERVICE

TABLE OF CONTENTS (Cont'd)

12.5 Billing and Collection Services 12-8

12.5.1 Recording, per message recorded 12-8
12.5.2 Message Processing (Rating), per message processed 12-8
12.5.3 Message-Billed Processing, per message processed for billing 12-8
12.5.4 Message Billed Inquiry, per message processed for billing 12-8
12.5.5 Message-Billed Investigation of Bill Charges, per message processed for billing 12-8
12.5.6 Message-Billed Message Investigation, per message processed for billing 12-8
12.5.7 Message-Billed Processing per bill rendered 12-8
12.5.8 Data Transmission, per message transmitted or received 12-8
12.5.9 CMDS Sampling, per record processed 12-8

12.6 Special Access Service 12-9

12.6.1 Surcharge for Special Access Service 12-9
12.6.2 Metallic Service 12-9
12.6.3 Telegraph Grade Service 12-10
12.6.4 Voice Grade Service 12-10
12.6.5 Program Audio Service 12-13
12.6.6 Video Service 12-14
12.6.7 Digital Data Service 12-15
12.6.8 High Capacity Service 12-16
12.6.9 Synchronous Optical Channel Service 12-19

12.7 Other Services 12-21

12.7.1 Public Packet Data Network 12-21

PRICE LIST ..... **1** (N)

ACCESS SERVICE

CONCURRING CARRIERS

None

CONNECTING CARRIERS

None

OTHER PARTICIPATING CARRIERS

None

REGISTERED SERVICE MARKS

None

REGISTERED TRADEMARKS

None

EXPLANATION OF SYMBOLS

The following symbols shall be used in this tariff for the purpose indicated below:

(C) - To signify changed regulation
(D) - To signify discontinued rate or regulation
(I) - To signify increase
(M) - To signify matter relocated without change
(N) - To signify new rate or regulation
(R) - To signify reduction
(S) - To signify reissued matter
(T) - To signify a change in text but no change in rate or regulation
(Z) - To signify a correction

ACCESS SERVICE

APPLICATION OF TARIFF

This tariff sets forth the service offerings, rates, terms and conditions applicable to the furnishing of intrastate access and point to point service by HTC Communications, Inc. (hereinafter "Company").

The provision of such services by the Telephone Company as set forth in this tariff does not constitute a joint undertaking with the customer for the furnishing of any service.

ACCESS SERVICE

1. DEFINITIONS

Defined below are certain terms that are used throughout this tariff in conjunction with access services provided by this Company.

Access Code: A seven-digit dialing sequence designated by 101XXXX or 950XXXX, where XXXX represents the uniform four-digit carrier identification code. (T)

Access Minutes: For the purpose of calculating chargeable usage, the term "Access Minutes" denotes customer usage of exchange facilities in the provision of interstate or foreign service. On the originating end of an interstate or foreign call, usage is measured from the time the originating end user's call is delivered by the Telephone Company to and acknowledged as received by the customer's facilities connected with the originating exchange. On the terminating end of an interstate or foreign call, usage is measured from the time the call is received by the end user in the terminating exchange. Timing of usage at both originating and terminating ends of an interstate or foreign call shall terminating when the calling or called party disconnects, whichever event is recognized first in the originating and terminating exchanges, as applicable.

Access Service: Switched Access to the network of an Interexchange Carrier for the purpose of originating or terminating communications.

Access Service Request: The industry Service Order format used by Access Service customers and access providers, as agreed to by the Ordering and Billing Forum. (T)

Access Tandem: An Exchange Carrier's switching system that provides a concentration and distribution function for originating and/or terminating traffic between local switching centers and customers' premises.

Advance Payment: Payment for all or part of a charge required before the start of service.

Alternate Access: Alternate Access has the same meaning as Local Access except that the provider of the service is an entity other than the Local Exchange Carrier authorized or permitted to provide such service. The charges for Alternate Access may be specified in a private agreement rather than in a published or special tariff if private agreements are permitted by applicable governmental rules.

Authorized User: A person, firm, corporation or other entity that is either authorized by the Customer to use Access Service or is placed in a position by the Customer, either through acts or omissions, to use Access Services.

Bit: The smallest unit of information in the binary system of notation.

Carrier or Common Carrier: see Interexchange Carrier or Exchange Carrier.

Channel(s): An electrical, or in the case of fiber optic-based transmission system, a photonic, communications path between two or more points of termination.

Common Channel Signaling: A high speed packet switched communications network which is separate (out of band) from the public packets switched and message networks. It is used to carry addressed signaling messages for individual trunk circuits and/or database related services between signaling points in the Common Channel Signaling network. (T)

ACCESS SERVICE

1. DEFINITIONS (Cont'd)

Common Line: The term "Common Line" denotes a line, trunk, pay telephone line or other facility provided under the general and/or local exchange service tariffs of the Telephone Company, terminated on a central office switch. A common line-residence is a line or trunk provided under the residence regulations of the general and/or local exchange service tariffs. A common line-business is a line provided under the business regulations of the general and/or local exchange service tariffs.

Company: HTC Communications, Inc., which is the issuer of this tariff.

Conventional Signaling: The inter-machine signaling system has been traditionally used in North America for the purpose of transmitting the called number's address digits from the originating Local Switching Center which terminates the call. In this system, all of the dialed digits are received by the originating switching machine, a path is selected, and the sequence of supervisory signals and outpulsed digits is initiated. No overlap outpulsing ten digit ANI, ANI information digits, or acknowledgment link are included in this signaling sequence.

Customer: The person, firm, corporation or other entity which orders Service and is responsible for the payment of charges and for compliance with the Company's tariff regulations.

Dedicated: A facility or equipment system or subsystem set aside for the sole use of a specific customer.

Duplex Service: Service which provides for simultaneous transmission in both directions.

800/888 Data Base Access Service: The term "800/888 Data Base Access Service" denotes a toll-free originating Trunkside Access Service where the 8XX service Access Code (i.e. 800, 822, 833, 844, 855, 866, 877 or 888 as available) is used. The term 8XX is used interchangeably with 800/888 Data Base Service throughout this tariff to describe this service.

End-user: Any individual, association, corporation, governmental agency or any other entity other than an Interexchange Carrier which subscribes to intrastate service provided by an Exchange Carrier.

Exchange Carrier: Any individual, partnership, association, joint-stock company, trust, governmental entity or corporation engaged in the provision of local exchange telephone service.

Fiber Optic Cable: A thin filament of glass with a protective outer coating through which a light beam carrying communications signals may be transmitted by means of multiple internal reflections to a receiver, which translates the message.

Firm Order Confirmation: Acknowledgment by the Company of receipt of an Access Service Request from the Customer, and commitment by the Company of a Service Date. (T)

Frame: The term Frame denotes a group of data bits in a specific format, which enables network equipment to recognize the meaning and purpose of the specific bits.

Frame Relay Access Connection: The Term Frame Relay Access Connection denotes the physical facility, including the associated port, between the end user's data terminal equipment and the Telephone Company's frame relay switch.

ACCESS SERVICE

1. DEFINITIONS (Cont'd)

Frame Relay Access Service: The term Frame Relay Access Service denotes a medium-speed, connection-oriented packet-switched data service that allows for the interconnection of Local Area Networks or other compatible customer premises equipment for the purpose of connecting to an interstate frame relay network.

Frame Relay End User Port: The term Frame Relay End User Port denotes the physical location in the Telephone Company switching office where the Special Access facility of the customer connects to the Frame Relay Access Service network. It specifies how a frame relay switch sends and receives data from a frame relay end user customer's LAN or other compatible CPE devices.

Frame Relay Inter-network Connection: The term Frame Relay Inter-network Connection denotes the physical facility, including the associated port, between the access customer's frame relay network and the Telephone Company's frame relay switch.

Frame Relay Inter-network Customer Port: The term Frame Relay Inter-network Customer Port denotes the physical location in the Telephone Company switching office where the access customer's Special Access facility connects to the Telephone Company's Frame Relay Access Service Network. It specifies how a frame relay switch sends and receives data from a frame relay access customer's network.

Hub: The Company office where all customer facilities are terminated for purposes of interconnection to trunks and/or cross-connection to distant ends.

Individual Case Basis: A service arrangement in which the regulations, rates and charges are developed based on the specific circumstances of the Customer's situation.

Interexchange Carrier or Interexchange Common Carrier: Any individual, partnership, association, joint-stock company, trust governmental entity or corporation engaged in state or foreign communication for hire by wire or radio, between two or more exchanges. (T)

Joint User: A person, firm or corporation designated by the Customer as a user of access facilities furnished to the Customer by the Company, and to whom a portion of the charges for such facilities are billed under a joint use arrangement.

Kbps: Kilobits, or thousands of Bits, per second.

LATA: A local access and transport area established pursuant to the Modification of Final Judgment entered by the United States District Court for the District of Columbia in Civil Action No. 82-0192 for the provision and administration of communications services.

Line Information Data Base: The data base which contains billing information such as telephone numbers, calling card numbers and associated billed number restriction data used in connection with the validation and billing of calls. (T)

Local Access: The connection between a customer's premises and a point of presence of the Exchange Carrier.

Local Switching Center: The switching center where telephone exchange service customer station Channels are terminated for purposes of interconnection to each other and to interoffice Trunks.

ACCESS SERVICE

1. DEFINITIONS (Cont'd)

Mbps: Megabits, or millions of bits, per second.

Meet Point Billing: The arrangement through which multiple Exchange Carriers involved in providing Access Services, divide the ordering, rating, and billing of such services on a proportional basis, so that each Exchange Carrier involved in providing a portion of the Access Service agrees to bill under its respective tariff.

Network: The Company's digital fiber optics-based network located in the Continental United States.

Network Services: The Company's telecommunications Access Services offered on the Company's network.

Non-Recurring Charges: The one-time initial charges for services or facilities, including, but not limited to charges for construction, installation, or specific fees, for which the Customer becomes liable at the time the Service Order is executed.

Off-Hook: The active condition of Switched Access or a telephone exchange service line.

On-Hook: The idle condition of Switched Access or a telephone exchange service line.

Out of Band Signaling: An exchange access signaling feature which allows customers to exchange call control and signaling information over a communications path which is separate from the message path.

Point of Presence: Location where the Customer maintains a facility for purposes of interconnecting to the Company's network.

Point to Point Service: An unswitched full time transmission service utilizing the Company's facilities to connect two or more Customer designated locations.

Premises: The space occupied by a Customer or Authorized User in a building or buildings or on contiguous property (except railroad rights-of-way, etc.).

Presubscription: An arrangement whereby an end user may select and designate to the Company an Interexchange Carrier or Carriers it wishes to access by dialing 1+ or 0+, in order to complete interLATA calls. The selected Interexchange Carrier(s) is/are referred to as the end user's Primary Interexchange Carrier(s). The end user may select any Interexchange Carrier that orders FGD Switched Access Service at the Local Switching Center that serves the end user. (T)

Recurring Charges: The monthly charges to the Customer for services, facilities and equipment, which continue to be assessed for the agreed upon duration of the service.

ACCESS SERVICE

1. DEFINITIONS (Cont'd)

Service Commencement Date: For Direct Connect Switched Access Service, the first day following the date on which the Company notifies the Customer that the requested service or facility is available for use, unless extended by the Customer's refusal to accept service which does not conform to standards set forth in the Service Order or this tariff, in which case the Service Commencement Date is the date of the Customer's acceptance of service. The parties may mutually agree on a substitute Service Commencement Date. If the Company does not have an executed service Order from a Customer, the Service Commencement Date will be the first date on which the service or facility was used by the Customer. For Tandem Connect Customers, the Service Commencement Date will be the first date on which the service or facility was used by the Customer.

Service Order: The written request for network services executed by the Customer and the Company in a format devised by the Company; or, in the alternative, the submission of an Access Service Request by the Customer in the manner specified in this tariff. The signing of a Service Order to submission of an Access Service Request by the Customer and acceptance thereof by the Company initiates the respective obligations of the parties as set forth therein and pursuant to this tariff, but the duration of the service is calculated from the Service Commencement Date. (T)

Service(s): The Company's telecommunications Access Services offered on the Company's network.

Shared Facilities: A facility or equipment system or subsystem which can be used simultaneously by several customers.

Signaling Point of Interface: The customer designated location where the SS7 signaling information is exchanged between the Company and the Customer.

Signaling System 7 (SS7): The common Channel Out of Band Signaling protocol developed by the Consultative Committee for International Telephone and Telegraph (CCITT) and the American National Standards Institute (ANSI).

Signaling Transfer Point Access: Allows the Customer to access a specialized switch which provides SS7 network access and performs SS7 messaging routing and screening.

Special Access Service: Dedicated access between a Customer's premises and another Point of Presence for the purpose of originating or terminating communications. Special Access is available to both carriers and end-users, as defined in this tariff.

Switched Access Service: Access to the switched network of an Exchange Carrier for the purpose of originating or terminating communications. Switched Access is available to carriers, as defined in this tariff.

Trunk: A communications path connecting two switching systems in a network, used in the establishment of an end-to-end connection.

ACCESS SERVICE

2. REGULATIONS

2.1 Undertaking of the Company

2.1.1 Scope

Access Services consist of furnishing communications service in connection with one-way or two-way information transmission between points within the State of South Carolina under the terms of this tariff.

2.1.2 Shortage of Equipment or Facilities

2.1.2.A The Company reserves the right to limit or to allocate the use of existing facilities, or of additional facilities offered by the Company when necessary because of lack of facilities or due to some other cause beyond the Company's control.

2.1.2.B The furnishing of service under this tariff is subject to the availability on a continuing basis of all the necessary facilities and is limited to the capacity of the Company's Fiber Optic Cable facilities as well as facilities the Company may obtain from other carriers from time to time, to furnish service as required at the sole discretion of the Company.

2.1.2.C The provisioning and restoration of service in emergencies shall be in accordance with Part 64, Subpart D, Appendix A of the Federal Communication Commission's Rules and Regulations, which specifies the priority system for such activities.

2.1.3 Terms and Conditions

2.1.3.A Except as otherwise provided herein, service is provided and billed on the basis of a minimum period of at least one month, and shall continue to be provided until canceled by the Customer, in writing, in not less than 30 days notice. Unless otherwise specified herein, for the purpose of computing charges in this tariff, a month is considered to have 30 days.

ACCESS SERVICE

2. REGULATIONS (Cont'd)

2.1 Undertaking of the Company (Cont'd)

2.1.3.B Customers may be required to enter in written Service Orders which shall contain or reference the name of the Customer, a specific description of the Service Ordered; the rates to be charged, the duration of the services, and the terms and conditions in this tariff. The Customer will also be required to execute any other documents as may be reasonably requested by the Company.

2.1.3.C At the expiration of the initial term specified in each Service Order, or in any extension thereof, service shall continue on a month to month basis at the then current rates unless terminated by either party upon 30 days written notice. Any termination shall not relieve the Customer of its obligation to pay any charges incurred under the Service Order and this tariff prior to termination. The rights and obligations which by their nature extend beyond the termination of the term of the Service Order shall survive such termination.

2.1.3.D This tariff shall be interpreted and governed by the laws of the State of South Carolina without regard for the State's choice of laws provisions.

2.1.4 Liability of the Company

2.1.4.A The liability of the Company for damages arising out of the furnishing of its Services, including but not limited to mistakes, omissions, interruptions, delays, errors, other defects, or representations by the Company, or use of these services or damages arising out of the failure to furnish the service whether caused by act or omission, shall be limited to the extension of allowances for interruption as set forth in 2.6 below. The extension of such allowances for interruption shall be the sole remedy of the Customer and the sole liability of the Company. The Company will not be liable for any direct, indirect, incidental, special, consequential, exemplary or punitive damages to Customer as a result of any Company service, equipment or facilities, or the sets or omissions or negligence of the Company’s employees or agents.

ACCESS SERVICE

2. REGULATIONS (Cont'd)

2.1 Undertaking of the Company (Cont'd)

2.1.4.B The Company shall not be liable for any delay or failure of performance or equipment due to causes beyond its control, including but not limited to: acts of God, fire, flood, explosion or other catastrophes; any law, order, regulation, direction action, or request of The United States government or of any other government, including state and local governments having or claiming jurisdiction over the Company, or of any department, agency, commission, bureau, corporation, or of any military authority; preemption of existing service in compliance with national emergencies; insurrections, riots; wars; unavailability of rights-of-way or materials; or strikes, lockouts work stoppages, or other labor difficulties.

2.1.4.C The Company shall not be liable for (a) any act or omission of any entity furnishing the Company or the Company's Customers facilities or equipment used for the interconnection with Access Services; or (b) for the acts or omissions of other Common Carrier or warehousemen.

2.1.4.D The Company shall not be liable for any damages or losses due to the fault or negligence of the Customer or due to the failure or malfunction of Customer-provided equipment or facilities.

2.1.4.E The Customer shall indemnify and hold the Company harmless from any and all losses, claims, demands, suits, or other actions, or any liabilities whatsoever, whether suffered, made instituted, or asserted by any other party or person(s), and for any loss, damage, or destruction of any property, whether owned by the Customer or others, caused or claimed to have been caused directly or indirectly by the installation, operation, failure to operate, maintenance, removal, condition, location, or use of any installation or equipment provided by the Company. The Company reserves the right to require each Customer to sign an agreement acknowledging acceptance of the provisions of this Section 2.1.4.F as a condition precedent to such installations.

ACCESS SERVICE

2. REGULATIONS (Cont'd)

2.1 Undertaking of the Company (Cont'd)

2.1.4.F The Company shall not be liable for any defacement of or damage to Customer's premises resulting from the furnishing of services or equipment on such premises or the installation or removal thereof, unless such defacement or damage is caused by the gross negligence or willful misconduct of the Company's agents or employees. No agents or employees of other participating Carriers shall be deemed to be agents or employees of the Company.

2.1.4.G The Company shall be indemnified and held harmless by the end user against any claim, loss or damage arising from the end user's use of services offered under this tariff including: claims for libel, slander, invasion of privacy or infringement of copyright arising from the end user's own communications; patent infringement claims arising from the end user's combining or connecting the service offered by the Company with facilities or equipment furnished by the end user of another Interexchange carrier; or all other claims arising out of any act or omission of the end user in connection with any service provided pursuant to this tariff.

2.1.4.H The entire liability of the Company for any claim, loss, damage or expense from any cause whatsoever shall in no event exceed sums actually paid to the Company by the Customer for the specific services giving rise to the claim, and no action or proceeding against the Company shall be commenced more than one (1) year after the service is rendered.

2.1.4.I The Company makes no warranties or representation, express or implied, including warranties or merchantability or fitness for a particular use, except those expressly set forth herein.

2.1.4.J The Company shall not be liable for any act or omission of any other company or companies furnishing a portion of the service, or for damages associated with service, Channels, or equipment which result from the operation of Customer-provided systems, equipment, facilities or services which are interconnected with Company services.

ACCESS SERVICE

2. REGULATIONS (Cont'd)

2.1 Undertaking of the Company (Cont'd)

2.1.4.K The Company does not guarantee nor make any warranty with respect to service installations at locations at which there is present an atmosphere that is explosive, prone to fire, dangerous or otherwise unsuitable for such installations. The Customer and end user shall indemnify and hold the Company harmless from any and all losses, claims, demands, suits, or other actions, or any liability whatsoever, whether suffered, made, instituted or asserted by the Customer or by another party, for any personal injury, to , or death of, any person or persons, or for any loss, damage or destruction of any property, whether owned by the Customer or others, caused or claimed to have been caused directly or indirectly, by the installation, operation, failure to operate, maintenance, removal, presence, condition, locations or use of service furnished by the Company at such locations.

2.1.4.L The Company shall not be liable for the Customer's failure to fulfill its obligations to take all necessary steps including, without limitation, obtaining, installing and maintaining all necessary equipment, materials and supplies, for interconnecting the terminal equipment or communications system of the Customer, or any third party acting as its agent, to the Company's network. The Customer shall secure all licenses, permits, rights-of-way, and other arrangements necessary for such interconnection. In addition, the Customer shall ensure that its equipment and/or system or that of its agent is properly interfaced with the Company's service, that the signals emitted into the Company's network are of the proper mode, bandwidth, power, data speed, and signal level for the intended use of the Customer and in compliance with the criteria set forth in Section 2.1.6 following, and that the signals do not damage Company equipment, insure its personnel or degrade service to other Customers. If the Customer or its agent fails to maintain and operate its equipment and/or system or that of its agent properly, with resulting imminent harm to Company equipment, personnel, or the quality of service to other Customer, the Company, may, upon written notice require the use of protective equipment at the Customer's expense. If this fails to produce satisfactory quality and safety, the Company may, upon written notice, terminate the Customer's service without liability.

ACCESS SERVICE

2. REGULATIONS (Cont'd)

2.1 Undertaking of the Company (Cont'd)

2.1.4.M The Company shall not be liable for any act or omission concerning the implementation of Presubscription, as defined herein.

2.1.4.N With respect to Telecommunications Relay Service (TRS), any service provided by the Company which involves receiving, translating, transmitting or delivering messages by telephone, text telephone, a telecommunications device for the deaf, or any other instrument over the facilities of Company or any connecting Carrier, Company's liability for the interruption or failure of the service shall not exceed an amount equal to the Company's charge for a one minute call to the called station at the time the affected call was made.

2.1.5 Notification of Service-Affecting Activities

The Company will provide the Customer reasonable notification of service-affecting activities that may occur in normal operation of its business. Such activities may include, but are not limited to, equipment or facilities additions, removals or rearrangements and routine preventative maintenance. Generally, such activities are not specific to an individual Customer but affect many Customer's services. No specific advance notification period is applicable to all service activities. The Company will work cooperatively with the Customer to determine the reasonable notification requirements. With some emergency or unplanned service-affecting conditions, such as an outage resulting from cable damage, notification to the Customer may not be possible.

2.1.6 Provision of Equipment & Facilities

2.1.6.A The Company shall use reasonable efforts to make available services to a Customer on or before a particular date, subject to the provisions of and compliance by the Customers with, the regulations contained in this tariff. The Company does not guarantee availability by any such date and shall not be liable for any delays in commencing service to any Customer.

2.1.6.B The Company shall use reasonable efforts to maintain facilities and equipment that it furnishes to the Customer. The Customer may not, nor may the Customer permit others to, rearrange, disconnect, remove, attempt to repair or otherwise interfere with any of the facilities or equipment installed by the Company, except upon the written consent of the Company.

ACCESS SERVICE

2. REGULATIONS (Cont'd)

2.1 Undertaking of the Company (Cont'd)

2.1.6.C The Company may substitute, change or rearrange any equipment or facility at any time and from time to time, but shall not thereby alter the technical parameters of the service provided to the Customer.

2.1.6.D Equipment the Company provides or installs at the Customer's premises for use in connection with the services the Company offers shall not be used for any purpose other than that for which the Company provided it.

2.1.6.E The Customer shall be responsible for the payment of service charges imposed on the Company by another entity, for visits to the Customer's premises when the service difficulty or trouble report results from the use of equipment or facilities provided by any party other than the Company, including, but not limited to the Customer.

2.1.6.F The Company shall not be responsible for the installation, operation, or maintenance of any Customer-provided communications equipment. Where such equipment is connected to the facilities furnished pursuant to this tariff, the responsibility of the Company shall be limited to the furnishing of facilities offered under this tariff and to the maintenance and operation of such facilities. Notwithstanding the above, the Company shall not be responsible for:

2.1.6.F.(1) the transmission of signals by Customer-provided equipment or for the quality of, or defects in, such transmission;

2.1.6.F.(2) the reception of signals by Customer-provided equipment; or

2.1.6.F.(3) network control signaling where such signaling is performed by Customer-provided network control signaling equipment.

2.1.6.G The Company intends to work cooperatively with the Customer to develop network contingency plans in order to maintain maximum network capability following natural or man-made disasters which affect telecommunications services.

ACCESS SERVICE

2. REGULATIONS (Cont'd)

2.1 Undertaking of the Company (Cont'd)

2.1.6.H The Company reserves the reasonable right to assign, designate or change telephone numbers, any other call number designations associated with Access Services, or the Company serving central office prefixes associated with such numbers, when necessary in the conduct of its business.

2.1.7 Non-Routine Installation

At the Customer's request, installation and/or maintenance may be performed outside the Company's regular business hours or in unusual locations. In such cases, charges based on cost of the actual labor, material, or other costs incurred by or charged to the Company will apply. If installation is started during regular business hours, but at the Customer's request, extends beyond regular business hours into time periods including, but not limited, to, weekends, holidays, and/or night hours, additional charges may apply.

2.1.8 Special Construction

Subject to the arrangement of the Company and to all of the regulations contained in this tariff, special construction of facilities may be undertaken on a reasonable efforts basis at the request of the Customer. Special construction is that construction undertaken and characterized by one or more of the following:

2.1.8.A where facilities are not presently available and there is no other requirement for the facilities so constructed;

2.1.8.B of a type other than that which the Company would normally utilize in the furnishing of its services;

2.1.8.C where facilities are to be installed over a route other than that which the Company would normally utilize in the furnishing of its services;

2.1.8.D where facilities are requested in a quantity greater than that which the Company would normally construct;

2.1.8.E where installation is on an expedited basis;

2.1.8.F on a temporary basis until permanent facilities are available;

ACCESS SERVICE

2. REGULATIONS (Cont'd)

2.1 Undertaking of the Company (Cont'd)

2.1.8.G installation involving abnormal costs; or

2.1.8.H in advance of its normal construction schedules.

Special construction charges for Switched Access Services will be determined on a time and expense basis, based on the company's current hourly charges.

2.1.9 Ownership of Facilities

Title to all facilities provided in accordance with this tariff remains in the Company, its agents, contractors or suppliers.

2.2 Prohibited Uses

2.2.1 The services the Company offers shall not be used for any unlawful purpose or for any use as to which the Customer has not obtained all required governmental approvals, authorizations, licenses, consents and permits.

2.2.2 The Company may require applicants for service who intend to use the Company's offerings for resale and/or for shared use to file a request with the Company confirming that their use of the Company's offerings complies with relevant laws and Federal Communications Commission regulations, policies, orders, and decisions; and if the reseller intends to provide intrastate services, is certified with the State Regulatory Authority.

2.2.3 The Company may require a Customer to immediately shut down its transmission of signals if said transmission is causing interference to others.

2.3 Obligations of the Customer

2.3.1 The Customer shall be responsible for

2.3.1.A the payment of all applicable charges pursuant to this tariff;

ACCESS SERVICE

2. REGULATIONS (Cont'd)

2.3 Obligations of the Customer (Cont'd)

2.3.1.B reimbursing the Company for damage to, or loss of, the Company's facilities or equipment caused by the acts or omissions of the Customer; or the noncompliance by the Customer with these regulations; or by fire or theft or other casualty on the Customer's premises, unless caused by the negligence or willful misconduct of the employees or agents of the Company. The Company will, upon reimbursement for damages to its facilities or equipment, cooperate with the Customer in prosecuting a claim against the person causing such damage and the Customer shall be subrogated in the Company's right of recovery of damages to the extent of such payment;

2.3.1.C providing at no charge, as specified from time to time by the Company, as needed, personnel, equipment, space, and power to operate Company facilities and equipment installed on the Customer premises, and the level of heating and air conditioning necessary to maintain the proper operating environment on such premises;

2.3.1.D obtaining, maintaining, and otherwise having full responsibility for all rights-of-way and conduit necessary for installation of fiber optic cable and associated equipment used to provide Access Services to the Customer from the cable building entrance or property line to the location of the equipment space described in 2.3.1(C) above. Any costs associated with obtaining and maintaining the rights-of-way described herein, including the costs of altering the structure to permit installation of the Company-provided facilities, shall be borne entirely by, or may be charged by the Company, to the Customer. The Company may require the Customer to demonstrate its compliance with this subsection prior to accepting an order for service;

2.3.1.E providing a safe place to work and complying with all laws and regulations regarding the working conditions on the premises at which Company employees and agents shall be installing or maintaining Company facilities and equipment. The Customer may be required to install and maintain Company facilities and equipment within a hazardous area if, in the Company's opinion, injury or damage to the Company employees or property might result from installation or maintenance by the Company. The Customer shall be responsible for identifying, monitoring, removing, and disposing of any hazardous material (e.g. asbestos) prior to any construction or installation work.

ACCESS SERVICE

2. REGULATIONS (Cont'd)

2.3 Obligations of the Customer (Cont'd)

2.3.1.F complying with all laws and regulations applicable to, and obtaining all consents, approvals, licenses, and permits as may be required with respect to the location of Company facilities and equipment in any Customer premises or the rights-of-way for which the Customer is responsible for obtaining under Section 2.3.1(D) above; and granting or obtaining permission for Company agents or employees to enter the Customer premises at any time for the purpose of installing, inspecting, maintaining, repairing, or upon termination of service as stated herein, removing the facilities or equipment of the Company; and

2.3.1.G not creating or allowing to be placed or maintained any liens or other encumbrances on the Company's equipment or facilities.

2.3.2 Claims

With respect to any service or facility provided by the Company; Customer shall indemnify, defend and hold harmless the Company from all claims, actions, damages, liabilities, costs, and expenses, including reasonable attorneys' fees for:

2.3.2.A any loss, destruction or damage to property of the Company or any third party, or the death of or injury to persons, including, but not limited to employees or invitees of either the Company or the Customer, to the extent caused by or resulting from the negligent or intentional act or omission of the Customer, its employees, agents, representatives or invitees; and

2.3.2.B any claim, loss, damage, expense or liability for infringement of any copyright, patent, trade secret, or any proprietary or intellectual property right of any third party, arising from any act or omission by the Customer, including without limitation, use of the Company's services and facilities in a manner not contemplated by the agreement between the Customer and the Company.

2.3.3 Jurisdictional Reporting

The jurisdictional reporting requirements will be as specified below. When a Customer orders Access service, its projected Percent Interstate Usage (PIU) must be provided in whole numbers to the Company. These whole number percentages will be used by the Company to apportion the use and/or charges between interstate and intrastate until a revised report is received as set forth herein.

ACCESS SERVICE

2. REGULATIONS (Cont'd)

2.3 Obligations of the Customer (Cont'd)

2.3.3.A Originating Access: Originating access minutes may be based on traffic originating at the State, LATA or Local Switching Center level, provided that the traffic being measured is only traffic originating from the Company's Local Switching Center(s). The Customer must provide the Company with a projected PIU factor on a quarterly basis, as specified below. Originating access minutes will be measured as follows, based on type of access:

2.3.3.A.(1) For Feature Group C and D Switched Access Service(s), as defined in Section 4.2.1, where the Company can determine jurisdiction by its call detail, the projected Percent Interstate Usage (PIU) will be developed by the Company on a monthly basis by dividing the measured interstate originating access minutes by the total originating access minutes.

2.3.3.A.(2) For Feature Group C and D with 950 Access (Feature Group B), as defined in section 4.2, the Customer must provide the Company with a projected PIU factor by supplying the Company with an interstate percentage of originating access minutes.

2.3.3.A.(3) For 500, 700, 8XX, calling card and operator service access, the Customer must provide the Company with a projected PIU factor for each type of access. The Customer who provides a PIU factor shall supply the Company with an interstate percentage of originating access minutes.

2.3.3.A.(4) If no PIU for originating minutes is submitted as specified herein, then the projected PIU will be set on a default basis of 50 percent interstate traffic and 50 percent intrastate traffic.

2.3.3.B Terminating Access: For Feature Group C and D Switched Access Service(s), the Customer must provide the Company with a projected PIU factor by supplying the Company with an interstate percentage of terminating access minutes on a quarterly basis, as described in Sections 2.3.3.D below. If no projected PIU factor is submitted by the Customer, then the projected PIU will be set on a default basis of 50 percent interstate traffic and 50 percent intrastate traffic.

ACCESS SERVICE

2. REGULATIONS (Cont'd)

2.3 Obligations of the Customer (Cont'd)

2.3.3.C Except where the Company-measured access minutes are used as set forth in 2.3.3.A above, the Customer-reported projected PIU factor, as set forth above, will be used until the Customer reports a different projected PIU factor, as set forth below. The revised report will serve as the basis for future billing, and will be effective on the next bill date.

2.3.3.D Effective on the first of January, April, July and October of each year, the Customer shall update its interstate and intrastate jurisdictional report. The Customer shall forward to the Company, to be received no later than 15 days after the first of each such month, a revised report showing the interstate and intrastate percentage of use for the past three months ending the last day of December, March, June and September, respectively, for each service arranged for interstate use, based solely on the traffic originating from or terminating to the Company Local Switching Center. The revised report will serve as the basis for the next three months billing and will be effective on the bill date for that service. If the Customer does not supply the reports for those services where reports are needed, the Company will assume the percentage to be the same as provided previously. For those cases in which a quarterly report has never been received from the Customer, the Company will assume the percentages to be the same as those provided in the Access Service Request.

2.3.3.E Jurisdictional Report Verification: For Switched Access Service, if a billing dispute arises or a regulatory commission questions the projected PIU factor, the Customer will provide the data issued to determine the projected PIU factor. The Customer will supply the data within 30 days of the Company's request.

The Customer shall keep records of call detail from which the percentage of interstate and intrastate use can be ascertained and, upon request of the Company, shall make the records available for inspection as reasonably necessary for purposes of verification of the percentages. The Company reserves the right to conduct an audit at any time during the year. The Customer, at its own expense, has the right to retain an independent auditing firm.

ACCESS SERVICE

2. REGULATIONS (Cont'd)

2.4 Customer Equipment and Channels

2.4.1 In General

A Customer may transmit or receive information or signals via the facilities of the Company.

2.4.2 Interconnection of Facilities

2.4.2.A Any special interface equipment necessary to achieve compatibility between the facilities and equipment of the Company used for furnishing Access Services and the Channels, facilities, or equipment of others shall be provided at the Customer's expense.

2.4.2.B Access Services may be connected to the services or facilities of other communications carriers only when authorized by, and in accordance with, the terms and conditions of the tariffs of the other communications carriers which are applicable to such connections.

2.5 Payment Arrangements

2.5.1 Payment for Service

The Customer is responsible for payment of all charges for services and facilities furnished by the Company to the Customer or its Joint or Authorized Users.

2.5.1.A Taxes

The Customer is responsible for the payment of any sales, use, gross receipts, excise, access or other local, state and federal taxes, charges or surcharges (however designated) excluding taxes on the Company's net income imposed on or based upon the provision, sale or use of Access Services. All such taxes shall be separately designated on the Company's invoices. Any taxes imposed by a local jurisdiction (e.g. county and municipal taxes) will only be recovered from those Customers located in the affected jurisdictions. If an entity other than the Company (e.g. another carrier or a supplier) imposes charges on the Company, in addition to its own internal costs, in connection with a service for which the Company's Non-Recurring Charge is specified, those charges will be passed on to the Customer. It shall be the responsibility of the Customer to pay any such taxes that subsequently become applicable retroactively.

ACCESS SERVICE

2. REGULATIONS (Cont'd)

2.5 Payment Arrangements (Cont'd)

2.5.1.B A surcharge is imposed on all charges for service originating at addresses in states which levy, or assert a claim of right to levy, a gross receipts tax on the Company's operations in any such state, or a tax on interstate access charges incurred by the Company for originating access to telephone exchanges in that state. This surcharge is based on the particular state's receipts tax and other state taxes imposed directly or indirectly upon the Company by virtue of, and measured by, the gross receipts or revenues of the Company in that state and/or payment of interstate access charges in that state. The surcharge will be shown as a separate line item on the Customer's monthly invoice.

2.5.2 Billing and Collection of Charges

Unless otherwise specified herein, bills are due and payable upon receipt.

The Company shall bill on a current basis all charges incurred by, and credits due to, the Customer under this tariff attributable to services established, provided, or discontinued during the preceding billing period.

2.5.2.A Non-Recurring Charges are due and payable within 30 days after the invoice date. The Company shall present an invoice for Non-Recurring Charges monthly to the Customer.

2.5.2.B The Company shall present invoice for non-usage sensitive Recurring Charges monthly to the Customer, in advance of the month in which service is to be provided, and invoices for usage sensitive charges monthly to the Customer subsequent to the usage. Recurring and usage sensitive charges shall be due and payable within 30 days after the invoice date.

2.5.2.C When service does not begin on the first day of the month, or end on the last day of the month, the charge for the fraction of the month in which service was furnished will be calculated on a pro-rata basis, based on the actual calendar month.

ACCESS SERVICE

2. REGULATIONS (Cont'd)

2.5 Payment Arrangements (Cont'd)

2.5.2.D Billing of the Customer by the Company will begin on the Service Commencement Date. Billing accrues through and includes the day that the service, circuit, arrangement or component is discontinued.

2.5.2.E Amounts not paid within 30 days after the date of invoice will be considered past due. If the Company becomes concerned at any time about the ability of a Customer to pay its bills, the Company may require that the Customer pay its bills within a specified number of days and make such payments in cash or the equivalent of cash.

If a service is disconnected by the Company in accordance with section 2.5.5 following and later restored, restoration of service will be subject to all applicable installation charges.

2.5.2.F Payment Dates and Late Payment Penalties

(1) All bills dated as set forth herein are due 31 days (payment date) after the bill day or by the next bill date (i.e., same date in the following month as the bill date), whichever is the shortest interval, except as provided herein, and are payable in immediately available funds. If the customer does not receive a bill at least 20 days prior to the 31-day payment due date, then the bill shall be considered delayed. When the bill has been delayed, upon request of the customer the due date will be extended by the number of days the bill was delayed. Such request of the customer must be accompanied with proof of late bill receipt.

If such payment date would cause payment to be due on a Saturday, Sunday or Legal Holiday, payment for such bills will be due from the customer as follows:

— If the payment date falls on a Sunday or on a Legal Holiday, which is observed on a Monday, the payment date shall be the first non-Holiday day following such Sunday or Legal Holiday.

— If the payment date falls on a Saturday or on a Legal Holiday which is observed on Tuesday, Wednesday, Thursday or Friday, the payment date shall be the last non-Holiday day preceding such Saturday or Legal Holiday.

ACCESS SERVICE

2. REGULATIONS (Cont'd)

2.5 Payment Arrangements (Cont'd)

(2) Further, if no payment is received by the payment date or if a payment or any portion of a payment is received by the Telephone Company after the payment date as set forth in (1) preceding, or if a payment or any portion of a payment is received by the Telephone Company in funds which are not immediately available to the Telephone Company, then a late payment penalty shall be due to the Telephone Company. The late payment penalty shall be the payment or the portion of the payment not received by the payment date times a late factor. The late factor shall be the highest interest rate (in decimal value) which may be levied by law for commercial transactions, compounded daily for the number of days from the payment date to and including the date that the customer actually makes the payment to the Telephone Company.

2.5.2.G Billing Disputes Resolved in Favor of the Telephone Company

Late Payment charges will apply to amounts withheld pending settlement of the dispute. Late payment charges are calculated as set forth in (C)(2) preceding except that when the customer disputes the bill on or before the payment date and pays the undisputed amount on or before the payment date, the penalty interest period shall not begin until 10 days following the payment date.

ACCESS SERVICE

2. REGULATIONS (Cont'd)

2.5 Payment Arrangements (Cont'd)

2.5.2.H Billing Disputes Resolved in Favor of the Customer

If the customer pays the total billed amount and disputes all or part of the amount, the Telephone Company will refund any overpayment. In addition, the Telephone Company will pay to the customer penalty interest on the overpayment. When a claim is filed within 90 days of the due date, the penalty interest period shall begin on the payment date. When a claim is filed more than 90 days after the due date, the penalty interest period shall begin from the date of the claim or the date of overpayment, whichever is later.

The penalty interest period shall end on the date that the Telephone Company actually refunds the overpayment to the customer. The penalty interest rate shall be the highest interest rate (in decimal value) which may be levied by law for commercial transactions, compounded daily for the number of days from the first date to and including the last date of the period involved.

2.5.2.I The Customer shall notify the Company of any disputed items on an invoice within 90 days of receipt of the invoice. If the Customer and the Company are unable to resolve the dispute to their mutual satisfaction, the Customer may file a complaint with the South Carolina State Corporation Commission in accordance with the Commission's rules of procedures.

2.5.2.J Ordering, Rating and Billing of Access Services Where More Than One Exchange Carrier is Involved

Both Multiple bill and Single bill billing options are supported under this tariff. Under a Meet Point Billing arrangement, the Company will only bill for charges for traffic carried between the Company Local Switching Center and the end user.

The billing arrangements are subject to the provisions of the Multiple Exchange Carrier Access billing Guidelines (MECAB) and the Multiple Exchange Carrier Ordering and Design Guidelines (MECOD), except that the Company will not bill for local transport as described in MECAB. The Company will bill the Tandem Connect rate elements as specified in this Tariff.

ACCESS SERVICE

2. REGULATIONS (Cont'd)

2.5 Payment Arrangements (Cont'd)

The Company must notify the Customer of: 1) the meet point option that will be used; 2) the Carrier(s) that will render the bill(s); 3) the Carrier(s) to whom payment should be remitted; and 4) the Carrier(s) that will provide the bill inquiry function. The Company shall provide such notification at the time orders are placed for Access Service. Additionally, the Company shall provide this notice, in writing, 30 days in advance of any changes in the arrangement.

The Company will handle the ordering, rating and billing of Access Service under this tariff where more than one Exchange Carrier is involved in the provision of Access Services, as follows:

2.5.2.J.(1) The Company must receive an order for Feature Group D (FGD) Switched Access Service, as defined herein, ordered to the Company's Local Switching Center through a switch operated by another Exchange Carrier.

2.5.2.J.(2) In addition, for FGD Switched Access Service ordered to the Company's Local Switching Center through a switch operated by another Exchange Carrier with whom the Company has an agreement, the Customer may be required to submit an order as specified by the Exchange carrier which operates the switch.

2.5.2.J.(3) Separate bills will be rendered by the Exchange Carrier for FGD access service, if the multiple bill option is selected.

ACCESS SERVICE

2. REGULATIONS (Cont'd)

2.5 Payment Arrangements (Cont'd)

2.5.2.J.(4) Rating and Billing of Service: Each company will provide its portion of access service based on the regulations, rates and charges contained in its respective Access Service tariff, subject to the following rules, as appropriate:

2.5.2.J.(4).(a) The application of non-distance sensitive rate elements varies according to the rate structure and the location of the facilities involved:

2.5.2.J.(4).(a).(I) when rates and charges are listed on a per minute basis, the Company's rates and charges will apply to traffic originating from the Customer's premises and terminating at the end user's premises, and vice versa.

2.5.3 Deposits

2.5.3.A Before the service or facility is furnished to a Customer whose credit has not been duly established, the Company may require a Customer to make a deposit to be held as a guarantee for the payment of charges. A deposit does not relieve the Customer of the responsibility for the prompt payment of bills on presentation. The deposit will not exceed an amount equal to:

2.5.3.A.(1) an amount in excess of two twelfths of the estimated charge for the service for the ensuing twelve months; or

2.5.3.A.(2) one half of the estimated charge for the minimum payment for a service or facility which has a minimum payment period of more than one month; except that the deposit may include an additional amount in the event that a termination charge is applicable. In addition, the Company shall be entitled to require such an applicant or Customer to pay all its bills within a specified period of time, and to make such payments in cash or the equivalent of cash. At the Company's option, such deposit may be refunded to the Customer's account at any time. Also, the Company reserves the right to cease accepting and processing Service Orders after it has requested a security deposit and prior to the Customer's compliance with this request.

ACCESS SERVICE

2. REGULATIONS (Cont'd)

2.5 Payment Arrangements (Cont'd)

2.5.3.B A deposit may be required in addition to an advance payment.

2.5.3.C The charges set forth in this tariff for Channel terminations contemplate installations made in normal locations and under normal working conditions. Any installations to be made under other circumstances are subject to additional charges.

2.5.3.D When a service or facility is discontinued, the amount of a deposit, if any, will be applied to the Customer's account and any credit balance remaining will be refunded. Before the service or facility is discontinued, the Company may, at its option return the deposit, or credit the Customer's account.

2.5.4 Refusal and Discontinuance of Service

2.5.4.A Upon nonpayment of any amounts owing to the Company, the Company may, by giving requisite prior written notice to the Customer discontinue or suspend service without incurring any liability.

2.5.4.B Upon violation of any of the other material terms or conditions for furnishing service the Company may, by giving 30 days prior notice in writing to the Customer, discontinue or suspend service without incurring any liability if such violation continues during that period.

2.5.4.C Upon condemnation of any material portion of the facilities used by the Company to provide service to a Customer or if a casualty renders all or any material portion of such facilities inoperable beyond feasible repair, the Company, by notice to the Customer, may discontinue or suspend service without incurring any liability.

2.5.4.D Upon the Customer's insolvency, assignment for the benefit of creditors, filing for bankruptcy or reorganization, or failing to discharge an involuntary petition within the time permitted by law, the Company may immediately discontinue or suspend service without incurring any liability.

ACCESS SERVICE

2. REGULATIONS (Cont'd)

2.5 Payment Arrangements (Cont'd)

2.5.4.E Upon any governmental prohibition, or required alteration of the services to be provided or any violation of an applicable law or regulation, the Company may immediately discontinue service without incurring any liability.

2.5.4.F Upon the Company's discontinuance of service to the Customer under Section 2.5.4.A or 2.5.4.B above, the Company, in addition to all other remedies that may be available to the Company at law or in equity or under any other provision of this tariff, may declare all future monthly and other charges which would have been payable by the Customer during the remainder of the term for which such services would have otherwise been provided to the Customer to be immediately due and payable.

2.5.4.G When Access Service is provided by more than one Company, the companies involved in providing the joint service may individually or collectively deny service to a Customer for nonpayment. Where the Company(s) affected by the nonpayment is incapable of effecting discontinuance of service without cooperation from the other joint providers of Switched Access Service, such other Company(s) will, if technically feasible, assist in denying the joint service to the Customer. Service denial for such joint service will only include calls originating or terminating within, or transiting, the operating territory of the Company initiating the service denial for nonpayment. When more than one of the joint providers must deny service to effectuate termination for nonpayment, in cases where a conflict exists in the applicable tariff provisions, the tariff regulations of the Company whose Local Switching Center serves the Customer shall apply for joint service discontinuance.

2.5.4.H The Company may discontinue the furnishings of any and/or all service(s) to a Customer, without incurring any liability:

ACCESS SERVICE

2. REGULATIONS (Cont'd)

2.5 Payment Arrangements (Cont'd)

2.5.4.H.(1) Immediately and without notice if the Company deems that such action is necessary to prevent or protect against fraud or to otherwise protect its personnel, agents, facilities or services. The Company may discontinue service pursuant to this subsection 2.5.4.H.(1) (a-f) if:

2.5.4.H.(1).(a) The Customer refuses to furnish information to the Company regarding the Customer's credit-worthiness, its past or current use of Common Carrier communications service, or its planned use of service(s); or

2.5.4.H.(1).(b) The Customer provides false information to the Company regarding the Customer's identity, address, credit-worthiness, past or current use of Common Carrier communications services, or its planned use of the Company's service(s); or

2.5.4.H.(1).(c) The Customer states that it will not comply with a request of the Company for security for the payment for service(s) in accordance with Section 2.5.4.A above; or

2.5.4.H.(1).(d) The Customer has been given written notice by the Company of any past due amount (which remains unpaid in whole or in part) for any of the Company's other Common Carrier communications services to which the Customer either subscribes or had subscribed or used; or

2.5.4.H.(1).(e) The Customer uses service to transmit a message, locate a person or otherwise give or obtain information without payment for the service; or

ACCESS SERVICE

2. REGULATIONS (Cont'd)

2.5 Payment Arrangements (Cont'd)

2.5.4.H.(1).(f) The Customer uses, or attempts to use, service with the intent to void the payment, either in whole or in part, of the tariffed charges for the service by:

2.5.4.H.(1).(f).(i) Using or attempting to use service by rearranging, tampering with, or making connections to the Company's service not authorized by this tariff; or

2.5.4.H.(1).(f).(ii) Using tricks, schemes, fake or invalid numbers, false credit devices, electronic devices; or

2.5.4.H.(1).(f).(iii) Any other fraudulent means or devices; or

2.5.4.H.(2) Immediately upon written notice to the Customer of any sum thirty (30) days past due;

2.5.4.H.(3) Immediately upon written notice to the Customer, after failure of the Customer to comply with a request made by the Company for security for the payment of service in accordance with Section 2.5.4.A, above; or

2.5.4.H.(4) Seven (7) days after sending the Customer written notice of noncompliance with any provision of this tariff if the noncompliance is not corrected within that seven (7) day period. The discontinuance of service(s) by the Company pursuant to this Section does not relieve the Customer of any obligation to pay the Company for charges due and owing for service(s) furnished up to the time of discontinuance.

2.5.4.I In the event the Company incurs fees or expenses, including attorney's fees, in collecting, or attempting to collect, any charges owed the Company, the Customer will be liable to the Company for the payment of all such fees and expenses reasonably incurred.

ACCESS SERVICE

2. REGULATIONS (Cont'd)

2.5 Payment Arrangements (Cont'd)

2.5.5 Cancellation of Application for Service

2.5.5.A Applications for service are noncancellable unless the Company otherwise agrees. Where the Company permits the Customer to cancel an application for service prior to the start of service or prior to any special construction, no charges will be imposed except as may be specified in this Section and Section 3.2.3.

2.5.5.B Where, prior to cancellation by the Customer, the Company incurs any expenses in installing the service or in preparing to install the service that it otherwise would not have incurred, a charge equal to the costs the Company incurred, less net salvage, shall apply, but in no case shall this charge exceed the sum of the charge for the minimum period of services ordered, including installation charges, and all charges others levy against the Company that would have been chargeable to the Customer had service begun.

2.6 Allowances for Interruptions in Service

Interruptions in service which are not due to the negligence of or noncompliance with the provisions of this tariff by the Customer or the operation or malfunction of the facilities, power, or equipment provided by the Customer, will be credited to the Customer as set forth in 2.6.1 for the part of the service that the interruption affects.

2.6.1 Credit for Interruptions

2.6.1.A A credit allowance will be made when an interruption occurs because of a failure of any component furnished by the Company under this tariff. An interruption period begins when the Customer reports a service, facility or circuit, to be interrupted and releases it for testing and repair. An interruption period ends when the service, facility, or circuit is operative. If the Customer reports a service, facility, or circuit to be inoperative but declines to release it for testing and repair, it is considered to be impaired, but not interrupted.

ACCESS SERVICE

2. REGULATIONS (Cont'd)

2.6 Allowances for Interruptions in Service (Cont'd)

2.6.1.B For Switched Access Service, no credit will be allowed for an interruption of less than twenty-four hours. After the first twenty-four hour period, a credit equal to 1/30 of the Direct Connect facilities charges will be applied to each interruption which is in excess of twelve hours and up to twenty-four hours.

2.6.2 Limitations on Allowances

No credit allowance will be made for:

2.6.2.A interruptions due to the negligence of, or noncompliance with the provision of this tariff by the Customer, Authorized User, Joint-User, or other Common Carrier providing service connected to the service of Company;

2.6.2.B interruptions due to the negligence of any person other than the Company, including, but not limited to, the Customer or other Common Carriers connected to the Company's facilities;

2.6.2.C interruptions due to the failure or malfunction of non-Company equipment;

2.6.2.D interruptions of service during any period in which the Company is not given full and free access to its facilities and equipment for the purpose of investigating and correcting interruptions;

2.6.2.E interruptions of service during a period when the Customer has released service to the Company for maintenance purposes or for implementation of a Customer order for a change in service arrangements;

2.6.2.F interruptions of service during any period when the Customer has released service to the Company for maintenance purposes or for implementation of a Customer order for a change in service arrangements;

2.6.2.G interruption of service due to circumstances or causes beyond the control of the Company.

ACCESS SERVICE

2. REGULATIONS (Cont'd)

2.6 Allowances for Interruptions in Service (Cont'd)

2.6.2.H Use of Alternative Service Provided by the Company: Should the Customer elect to use an alternative service provided by the Company during the period that a service is interrupted, the Customer must pay the tariffed rates and charges for the alternative service used.

2.6.3 Cancellation for Service Interruption

Cancellation or termination for service interruption is permitted only if any circuit experiences a single continuous outage of eight (8) hours or more, or cumulative service credits equaling 16 hours in a continuous 12-month period. The right to cancel service under this provision applies only to the single circuit which has been subject to the outage or cumulative service credits.

2.7 Cancellation of Service

2.7.1 If a Customer cancels services before the completion of the term for any reason whatsoever other than a service interruption (as defined in Section 2.6.1 above), the Customer agrees to pay to the Company the following sums which shall become due and owing as of the effective date of the cancellation or termination, and shall be payable within the period set forth in Section 2.5.2: all costs, fees and expenses reasonably incurred in connection with 1) all Non-Recurring Charges reasonably expended by the Company to establish service to Customer, plus 2) any disconnection, early cancellation or termination charges reasonably incurred and paid to third parties by Company on behalf of Customer, plus 3) all Recurring Charges specified in the applicable tariff for the balance of the then current term.

2.8 Transfers and Assignments

Neither the Company nor the Customer may assign or transfer its rights or duties in connection with the services and facilities provided by the Company without the written consent of the other party, except that the Company may assign its rights and duties (a) to any subsidiary, parent Company or affiliate of the Company (b) pursuant to any sale or transfer of substantially all the assets of the Company; or pursuant to any financing, merger or reorganization of the Company.

ACCESS SERVICE

2. REGULATIONS (Cont'd)

2.9 Notices and Communications

2.9.1 The Customer shall designate on the Service Order an address to which the Company shall mail or deliver all notices and other communications, except that the Customer may also designate a separate address to which the Company's bills for service shall be mailed.

2.9.2 The Company shall designate on the Service Order an address to which the Customer shall mail or deliver all notices and other communications, except that the Company may designate a separate address, on each bill for service, to which the Customer shall mail payment on that bill.

2.9.3 All notices or other communications required to be given pursuant to this tariff shall be in writing. Notices and other communications of either party, and all bills mailed by the Company, shall be presumed to have been delivered to the other party on the third business day following deposit of the notice, communication, or bill with the U.S. Mail or a private delivery service, prepaid and properly addressed, or when actually received or refused by the addressee, whichever occurs first.

2.9.4 The Company or the Customer shall advise the other party of any changes to the addresses designated for notices, other communications or billing, by following the procedures for giving notice set forth herein

2.10 Unlawful and Abusive Use

The services provided under this tariff shall not be used for an unlawful purpose or used in an abusive manner.

Abusive use includes:

- The use of the service of the Telephone Company for a call or calls, anonymous or otherwise, in a manner reasonable expected to frighten, abuse, torment, or harass another;

- The use of the service in such a manner as to interfere unreasonably with the use of the service by one or more other customers.

ACCESS SERVICE

3. ORDERING OPTIONS FOR SWITCHED AND SPECIAL ACCESS SERVICE

3.1 General

This section sets forth the regulations and order related charges for Access Service Requests for Switched Access Service, as defined in this tariff. These charges are in addition to other applicable charges set forth in other sections of this tariff. (T)

3.1.1 Ordering Conditions

All services offered under this tariff will be ordered using an Access Service Request. The format and terms of the Access Service Request will be as specified in the industry Access Service Order Guidelines, unless otherwise specified herein. A Customer may order any number of services of the same type and between the same premises on a single Access Service Request. All details for services for a particular order must be identical. (T)

The Customer shall provide all information necessary for the Company to provide and bill for the requested service. When placing an order for Access Service, the Customer shall provide the following minimum information:

3.1.1.A Customer name and premises address(es);

3.1.1.B Billing name and address (when different from Customer name and address); and

3.1.1.C Customer contact name(s) and telephone number(s) for the following provisioning activities: order negotiation, order confirmation, interactive design, installation and billing.

The order date (Application Date) is the date on which the Company receives a firm commitment and sufficient information from the Customer to allow processing of the Access Service Request. The Customer is advised of the critical events in the provisioning process, the Application Date, the Plant Test Date and the Service Commencement Date, at the time the Company gives the Customer a Firm Order Confirmation. (T)

ACCESS SERVICE

3. ORDERING OPTIONS FOR SWITCHED AND SPECIAL ACCESS SERVICE (Cont'd)

3.1 General (Cont'd)

3.1.2 Provision of Other Services

Unless otherwise specified herein, all services offered under this tariff shall be ordered with an Access Service Request. (T)

With the agreement of the Company, other services may subsequently be added to the Access Service Request at any time, up to and including the service date for the Access Service. When added subsequently, charges for a Design Change charge will apply when an engineering review is required.

Additional Engineering is not an ordering option, but will be applied to an Access Service Request when the Company determines that Additional Engineering is necessary to accommodate a Customer request. Additional Engineering will be provided by the Company at the request of the Customer only when a Customer requests additional technical information after the Company has already provided the technical information included on the Design Layout Report as set forth herein. The Customer will be notified when Additional Engineering is required, and will be furnished with a written statement setting forth the justification for the Additional Engineering as well as an estimate of the charges. If the Customer agrees to the Additional Engineer, a firm order will be established. If the Customer does not want the service or facilities after being notified by the Company that Additional Engineering is required, the Customer may cancel the order and no charges will apply. Once a firm order has been established, the total charge to the Customer for the Additional Engineering may not exceed the original estimated amount by more than ten (10) percent. (T)

3.2 Access Order

An Access Service Request is required by the Company to provide a Customer Switched Access Service, as described herein. An Access Service Request will be required for each new similar service arrangement or group of common circuits. (T)

When a Customer requests new or additional Switched Access Service, one or more Access Service Requests may be required. The number of orders required is dependent on the type of services and/or facilities being requested. (T)

3. ORDERING OPTIONS FOR SWITCHED AND SPECIAL ACCESS SERVICE (Cont'd)

3.2 Access Order (Cont'd)

When placing an order for either Switched or Special Access Service, as described in sections 4 and 9, respectively, the Customer shall provide all standard Access Service Request ordering information as specified in industry guidelines. The Customer will also be required to provide this information to order additional service for an existing service type. For new Customers ordering Tandem Connect Service, the Customer will only be required to complete an Access Service Request for installation of new service. The Access Order charges are found in Section 12.1.1. (T)

3.2.1 Access Service Date Intervals

Access Service is provided with one of the following Service Date intervals:

-Standard Interval
-Negotiated Interval

The Company will provide an Firm Order Confirmation and the Service Commencement Date contingent on the Access Service Request being complete as received. To the extent the Access Service can be made available with reasonable effort, the Company will provide the Access Service in accordance with the Customer's requested interval, subject to the following conditions: (T)

3.2.1.A Standard Interval

The Standard Interval for Switched Service will be published.

3.2.1.B Negotiated Interval

The Company will negotiate a Service Date interval with the Customer when:

3.2.1.B.(1) The Customer requests a Service Date before or beyond the applicable Standard Interval Service Date; or

3.2.1.B.(2) There is no existing facility connecting the Customer premises with the Company; or

3.2.1.B.(3) The Customer requests a service that is not considered by the Company to be a standard service offering (for example, if Additional Engineering is required to complete the order); or

ACCESS SERVICE

3. ORDERING OPTIONS FOR SWITCHED AND SPECIAL ACCESS SERVICE (Cont'd)

3.2 Access Order (Cont'd)

3.2.1.B.(4) The Company determines that Access Service cannot be installed within the Standard Interval.

The Company will offer a Service Date based on the type and quantity of Access Service the Customer has requested. The Negotiated Interval may not exceed by more than six months the Standard Interval Service Date, or, when there is no Standard Interval, the Company offered Service Date.

3.2.2 Access Service Request Modifications

The Customer may request a modification of its Access Services Request prior to the Service Commencement Date. All modifications must be in writing using the industry Access Services Request process. The Company, in its sole discretion, may accept a verbal modification from the Customer. The Company will make every effort to accommodate a request modification when it is able to do so with the normal work force assigned to complete such an order within normal business hours. Charges for access Service Order modification will apply as set forth below, on a per occurrence basis. (T)

3.2.2.A Service Commencement Date Changes

Access Service Request service dates for the installation of new services or rearrangement of existing services may be changed, but the new service date may not exceed the original Service Commencement Date by more than 30 calendar days. When, for any reason, the Customer indicates that service cannot be accepted for a period not to exceed 30 calendar days, and the Company accordingly delays the start of service, a Service Date Change Charge will apply. In addition, when the Customer submits a request for a Service Date Change that is less than five (5) business days from the date of notification by the Customer, a Service Date Change Charge and an Expedite Charge will apply. No Expedite Charge will apply if the Customer requests a Service Date Change that is more than five (5) business days from the date of request by the Customer, but earlier than the original requested Service Commencement Date. (T)

ACCESS SERVICE

3. ORDERING OPTIONS FOR SWITCHED AND SPECIAL ACCESS SERVICE (Cont'd)

3.2 Access Order (Cont'd)

If the customer-requested service date is more than 30 calendar days after the original service date, the order will be canceled by the Company on the 31st day. Appropriate cancellation charges will be applied. If the Customer still requires the service, the Customer must place a new Access Services Request with the Company.

The Service Date Change Charge will apply on a per order, per occurrence basis for each service date change. The applicable charges are set forth in Section 12.1.2.

3.2.2.B Design Change Charge

The Customer may request a Design Change to the Service Ordered. A Design Change is any change to an Access Services Request which requires an Engineering Review. An Engineering Review is a review by Company personnel of the Service Ordered and the requested changes to determine what change(s) in the design, if any, are necessary to meet the Customer's request. Design Changes include such changes as the addition or deletion of optional features or functions, a change in the type of Transport Termination (Switched Access only) or type of Channel interface. Any other changes are not considered Design Changes for the purpose of this subsection, and will require issuance of a new Access Service Request and the cancellation of the original Access Services Request. The appropriate cancellation charges will apply in these instances. (T)

The Design Change Charge will apply on a per order, per occurrence basis, for each order requiring a Design Change. The applicable charges, as set forth in Section 12.1.3 are in addition to any Service Date Change Charges that may apply.

ACCESS SERVICE

3. ORDERING OPTIONS FOR SWITCHED AND SPECIAL ACCESS SERVICE (Cont'd)

3.2 Access Order (Cont'd)

3.2.2.C Expedited Order Charge

When placing an Access Order for service(s) for which a Standard Interval exists, a Customer may request a Service Commencement Date that is earlier than the Standard Interval Service Date, in which case an Expedite Charge will apply. The Expedite Charge will not apply if the new Service Commencement Date is more than five (5) days from the date of the request to the Company of the expedited order request. The request for an earlier service date may be received from the Customer prior to its issuance of an Access Service Request, or after the Access Service Request has been issued but prior to the service date. The Company has the exclusive right to accept or deny the Expedite Order request. However, if, upon reviewing availability of equipment and scheduled work load, the Company agrees to provide service on an expedited basis and the Customer accepts the Company's proposal, an Expedite Charge will apply. (T)

If the Company is subsequently unable to meet an agreed upon expedited service date, the Expedite Charge will not apply.

In the event the Company provides service on an expedited basis at the Customer's request, and the Customer delays service or is not ready for delivery of service at the time of installation, a Service Date Change Charge will apply in addition to the Expedite Charge.

In the event that the Customer cancels an expedite request, the Expedite Charge will be added to any applicable Cancellation Charge specified herein.

In the event that the Customer requests a Service Date Change after the Company has received the original expedite request, the Expedite Charge will still apply.

An Expedite Charge will not be applied to orders expedited for Company reasons.

ACCESS SERVICE

3. ORDERING OPTIONS FOR SWITCHED AND SPECIAL ACCESS SERVICE (Cont'd)

3.2 Access Order (Cont'd)

If costs other than additional administrative expenses are to be incurred when the Access Order is expedited, the regulations and charges for Special Construction as set forth in this tariff will apply.

The Expedited Order Charge will apply on a per order, per occurrence basis, as specified in Section 12.1.4.

3.2.3 Cancellation of an Access Service Request

A Customer may cancel an Access Services Request for the installation of Switched Access Service at any time prior to notification by the Company that service is available for the Customer's use. The cancellation date is the date the Company receives written or verbal notice from the Customer that the order is to be canceled. The verbal notice must be followed by written confirmation within ten (10) days. A Customer may negotiate an extension of a service date of an Access Service Request for installation of new service or rearrangement of existing service, in which case a Service Date Change Charge will apply. However, the new service date cannot exceed the originally established service date by more than 30 calendar days. On the 31st day beyond the original service date, the Access Services Request will be canceled and the appropriate Cancellation Charge will be applied. (T)

Except as specified herein, Cancellation Charges will apply as specified in Section 12.1.5.

If the cancellation occurs prior to the Company's receiving the Access Service Request, no charges shall apply. (T)

If the Company misses a service date for a Standard or Negotiated Interval Access Order by more than 30 days due to circumstances such as acts of God, governmental requirements, work stoppages and civil commotion, the Company shall not be liable for such delay and the Customer may cancel the Access Service Request without incurring cancellation charges. (T)

3.2.4 Minimum Period of Service

The minimum period for which Access Service is provided and for which charges are applicable is one month.

ACCESS SERVICE

3. ORDERING OPTIONS FOR SWITCHED AND SPECIAL ACCESS SERVICE (Cont'd)

3.2 Access Order (Cont'd)

3.2.4.A The following changes will be treated as a discontinuance of the existing service and a request for installation of a new service. All associated Non-Recurring Charges will apply for the new service, and a new minimum period will be established:

3.2.4.A.(1) A change in the identity of the Customer of record;
3.2.4.A.(2) A move by the Customer to a different building;
3.2.4.A.(3) A change in type of service;
3.2.4.A.(4) A change in Switched Access Service Interface (i.e., DS-1 or DS-3);
3.2.4.A.(5) A change in Switched Access Service Traffic Type.

3.2.4.B When Access Service is disconnected prior to the expiration of the minimum period, charges are applicable for the balance of the minimum period. The Minimum Period Charge for monthly billed services will be determined as follows:

For Switched Access Service, the charge for a month or fraction thereof is the applicable minimum monthly charge for the capacity made available to the Customer.

All applicable Non-Recurring Charges for the service will be billed in addition to the Minimum Period Charge.

When Access Service is disconnected prior to the expiration of the minimum period, charges are applicable for the balance of the minimum period. The Minimum Period Charge for monthly billed services will be determined as follows:

For Switched Access Service, the charge for a month or fraction thereof is the applicable minimum monthly charge for the capacity made available to the Customer.

All applicable Non-Recurring Charges for the service will be billed in addition to the Minimum Period Charge.

ACCESS SERVICE

4. SWITCHED ACCESS SERVICE

4.1 General

Switched Access Service, which is available to Customers for their use in furnishing their services to end users, provides a two-point communications path between a Customer's premises and an end user's premises. It provides for the use of common terminating, switching and transport facilities. Switched Access Service provides the ability to originate calls from an end user's premises to a Customer's premises, and to terminate calls from a Customer's premises location to an end user's premises.

4.2 Provision and Description of Switched Access Service Arrangements

Switched Access Service is provided in the following service types:

4.2.1 Feature Group Access

4.2.1.A Feature Group C (FGC) Access

FGC Access provides trunk side access to Telephone Company end office switches for the customer's use in originating and terminating communications. Existing FGC Access will be converted to Feature Group D Access when Feature Group D Access becomes available in an end office.

Feature Group C switching is provided at all end office switches unless Feature Group D end office switching is provided in the same office. When FGD switching is available, FGC switching will not be provided. FGC is provided at Telephone Company end office switches on a direct trunk basis or via Telephone Company designated access tandem switches.

FGC is provided as trunk side switching through the use of end office or access tandem switch trunk equipment. The switch trunk equipment is provided with answer and disconnect supervisory signaling. Wink start start-pulsing signals are provided in all offices where available. In those offices where wink start start-pulsing signals are not available, delay dial start-pulsing signals will be provided, unless immediate dial pulse signaling is provided, in which case no start-pulsing signals are provided.

FGC is provided with multifrequency address signaling except in certain electromechanical end office switches where multifrequency signaling is not available. In such switches, the address signaling will be dial pulse or immediate dial pulse signaling, whichever is available. Up to

ACCESS SERVICE

4. SWITCHED ACCESS SERVICE (Cont'd)

4.2 Provision and Description of Switched Access Service Arrangements (Cont'd)

4.2.1 Feature Group Access (Cont'd)

4.2.1.A Feature Group C (FGC) Access (Cont'd)

12 digits of the called party number dialed by the customer's end user using dual tone multifrequency or dial pulse address signals will be provided by Telephone Company equipment to the customer's premises where the Switched Access Service terminates. Such called party number signals will be subject to the ordinary transmission capabilities of the Local Transport provided.

4.2.1.B Feature Group D (FGD) Access

FGD Access, which is available to all Customers, is provisioned at the DS-1 level and provides trunk-side access to Company Local Switching center switches, with an associated uniform 101XXXX Access Code for the Customer's use in originating and terminating communications.

Basic FGD service will be provided with SS7 (Multi-Frequency In Band Signaling is also available as a Common Switching Option for Feature Group D). End users of the Customer's service may also originate calls to certain FGD Access Customers without dialing the 101XXXX Access Code if the end user is presubscribed, as described herein.

The Access Code for FGD switching is a uniform Access Code of the form 101XXXX. A single Access Code will be the assigned number of all FGD access provided to the Customer by the Company. No Access Code is required for calls to a Customer over FGD Switched Access Service if the end user's telephone exchange service is arranged for Presubscription to that Customer, as set forth herein.

Where no Access Code is required, the number dialed by the Customer's end user shall be a seven or ten digit number for calls in the North America Numbering Plan (NANP), except for 00-dialed calls which are routed to the predesignated Customer. For international calls outside the NANP, a seven- to twelve-digit number may be dialed. The form of the numbers dialed by the Customer's end user is NXX-XXXX, 0+ or 1 + NXX-XXXX, NPA + NXX-XXXX, 0+ or 1 + NPA + NXX-XYCXX, and, when the Local Switching Center is equipped for International Direct Distance Dialing (IDDD), 01 + CC +NN or 011 + CC + NN.

ACCESS SERVICE

4. SWITCHED ACCESS SERVICE (Cont'd)

4.2 Provision and Description of Switched Access Service Arrangements (Cont'd)

When the 101XXXX Access Code is used, FGD switching also provides for dialing the digit 0 (zero) for access to the Customer's operator, 911 for access to the Company's emergency service or the end-of-dialing digit (#) for cut-through access to the Customer's premises.

In addition, end users may originate calls by dialing the 950-XXXX Access Code specific to a particular Interexchange Carrier, provided that the Interexchange Carrier has subscribed to the Company's Feature Group D with 950 Access (Feature Group B) Common Switching Optional Feature. If the end user is presubscribed to that Interexchange Carrier, no Access Code is necessary.

4.2.2 Manner of Revision

Trunks used for Switched Access Service may be configured for one-way (either originating only or terminating only) or for two-way directionally. It is the Customer's responsibility to order a sufficient number of trunks of each type in order to meet its desired grade of service objective.

4.2.3 Rate Categories

Following is a description of the rate categories for the facilities required to provide Switched Access Services to the customer.

4.2.3.A Local Transport

The Local Transport rate category establishes the charges related to the transmission and tandem switching facilities between the customer-designated premises and the Company's Local Switching equipment, where the customer's traffic is switched to originate or terminate the customer's communications.

Local Transport is provided at the rates and charges set forth in 12.2.

The mileage rate element is determined by the Vertical, and Horizontal Coordinates (V&H) method, as set forth on the National Exchange Carrier Association Tariff, F.C.C. No. 4. When the calculation results in a fraction of a mile, the total is rounded up to the next whole mile before applying the rate.

ACCESS SERVICE

4. SWITCHED ACCESS SERVICE (Cont'd)

4.2 Provision and Description of Switched Access Service Arrangements (Cont'd)

4.2.3 Rate Categories (Cont'd)

4.2.3.A.(1) Network Blocking Charge

The customer will be notified by the Telephone Company to increase its capacity (busy hour minutes of capacity or quantities of trunks) when excessive trunk group blocking occurs on groups carrying Feature Group D traffic and the measured access minutes for that hour exceed the capacity purchased. Excessive trunk group blocking occurs when the blocking thresholds stated below are exceeded. They are predicated on time consistent, hourly measurements over a 30 day period excluding Saturdays, Sundays and national holidays. If the order for additional capacity has not been received by the Telephone Company within 15 days of the notification, the Telephone Company will bill the customer, at the rate set forth in Section 12 following, for each overflow in excess of the blocking threshold when (1) the average "30 days period" overflow exceeds the threshold level for any particular hour and (2) the "30 day period" overflow exceeds the threshold level for any particular hour and (2) the "30 days period" measured average originating or two-way usage for the same clock hour exceeds the capacity purchased.

Blocking Thresholds

Trunks in Service	1%	1/2%	
1-2		7.0%	4.5%
3-4		5.0%	3.5%
5-6		4.0%	2.5%
7 or greater	3.0%	2.0%	

The 1% blocking threshold is for transmission paths carrying traffic direct (without an alternate route) between an end office and a customer's premises. The 1/2% blocking threshold is for transmission paths carrying first routed traffic between an end office and a customer's premises via an access tandem.

4. SWITCHED ACCESS SERVICE (Cont'd)

4.2 Provision and Description of Switched Access Service Arrangements (Cont'd)

4.2.3 Rate Categories (Cont'd)

4.2.3.B. End Office

The End Office rate category includes the Local Switching and Information Surcharge rate elements.

4.2.3.B.(1) Local Switching

The Local Switching rate element establishes the charges related to the use of end office switching equipment, the terminations in the end office of end user lines, and the terminations of calls at the Company Intercept Operators or recordings.

Rates for Local Switching are set forth in 12.2.2.A following. (T)

4.2.3.B.(2) Information Surcharge

Information Surcharge rates are assessed to a Customer based on the total number of access minutes. Information Surcharge rates are as set forth in 12.2.2.D following.

4.2.3.B.(3) Carrier Common Line

The Telephone Company will provide Carrier Common Line Access Service (Carrier Common Line Access) to customers in conjunction with Switched Acess Service provided in Section 4 of this tariff.

(a) General Description

Carrier Common Line Access provides for the use of end users' Telephone Company provided common lines by customers for access to such end users to furnish Intrastate Communications.

Premium Access is (1) Switched Access Service provided to customers under this tariff which furnish intrastate MTS/WATS, and (2) Switched Access in an end office converted to equal access.

ACCESS SERVICE

4. SWITCHED ACCESS SERVICE (Cont'd)

4.2 Provision and Description of Switched Access Service Arrangements (Cont'd)

4.2.3 Rate Categories (Cont'd)

4.2.3.B. End Office (Cont'd)

4.2.3.B.(3) Carrier Common Line (Cont'd)

(a) General Description (Cont'd)

Non-Premium Access is Switched Access Service provided in an end office not yet converted to equal access to customers that do not furnish intrastate MTS/WATS.

(b) Limitations

(1) Exclusions

Neither a telephone number nor detail billing are provided with Carrier Common Line Access. Additionally, directory listings and intercept arrangements are not included in the rates and charges for Carrier Common Line Access.

(2) Access Groups

All line side connections provided in the same access group will be limited to the same features and operating characteristics.

All trunk side connections provided in the same access group will be limited to the same features and operating characteristics.

ACCESS SERVICE

4. SWITCHED ACCESS SERVICE (Cont'd)

4.2 Provision and Description of Switched Access Service Arrangements (Cont'd)

4.2.3 Rate Categories (Cont'd)

4.2.3.B. End Office (Cont'd)

4.2.3.B.(3) Carrier Common Line (Cont'd)

(b) Limitations (Cont'd)

(3) WATS Access Lines

Where Switched Access Services are connected with Special Access Services at Telephone Company Designated WATS Serving Offices for the provision of WATS or WATS-type Services, Switched Access Service minutes which are carried on that end of the service (i.e., originating minutes for outward WATS and WATS-type services and terminating minutes for inward WATS and WATS-type services) shall not be assessed Carrier Common Line Access per minute charges.

(c) Undertaking of the Telephone Company

(1) Provision of Service

Where the customer is provided Switched Access Service under other sections of this tariff, the Telephone Company will provide the use of Telephone Company common lines by a customer for access to end users at rates and charges set forth in 10.2.2 following.

ACCESS SERVICE

4. SWITCHED ACCESS SERVICE (Cont'd)

4.2 Provision and Description of Switched Access Service Arrangements (Cont'd)

4.2.3 Rate Categories (Cont'd)

4.2.3.B. End Office (Cont'd)

4.2.3.B.(3) Carrier Common Line (Cont'd)

(c) Undertaking of the Telephone Company (Cont'd)

(2) Interstate and Intrastate Use

The Switched Access Service provided by the Telephone Company includes the Switched Access Service provided for both interstate and intrastate communications. The Carrier Common Line Access rates and charges as set forth in 10.2.2 following apply to Intrastate Switched Access Service minutes in accordance with the rate regulations as set forth in 2.3.3 preceding (Percent Interstate Use – PIU).

(d) Obligations of the Customer

(1) Switched Access Service Requirement

The Switched Access Service associated with Carrier Common Line Access shall be ordered by the customer under other sections of this tariff.

(2) Supervision

The customer facilities at the premises of the ordering customer shall provide the necessary on-hook and off-hook supervision.

ACCESS SERVICE

4. SWITCHED ACCESS SERVICE (Cont'd)

4.2 Provision and Description of Switched Access Service Arrangements (Cont'd)

4.2.3 Rate Categories (Cont'd)

4.2.3.B. End Office (Cont'd)

4.2.3.B.(3) Carrier Common Line (Cont'd)

(e) Determination of Usage Subject to Carrier Common Line Access Charges

Except as set forth herein, all Switched Access Service provided to the customer will be subject to Carrier Common Line Access charges.

(1) Determination of Jurisdiction

When the customer reports interstate and intrastate use of Switched Access Service, the associated Carrier Common Line Access used by the customer for intrastate will be determined as set forth in 2.3.3 following (Percent Interstate Use – PIU).

(f) Rate Regulations

(1) Billing of Charges

Carrier Common Line charges will be billed to each Switched Access Service provided under this tariff in accordance with the regulations as set forth in 4.2.3.B.(3)(f)(4) following (Determination of Premium and Non-Premium Charges).

ACCESS SERVICE

4. SWITCHED ACCESS SERVICE (Cont'd)

4.2 Provision and Description of Switched Access Service Arrangements (Cont'd)

4.2.3 Rate Categories (Cont'd)

4.2.3.B. End Office (Cont'd)

4.2.3.B.(3) Carrier Common Line (Cont'd)

(f) Rate Regulations (Cont'd)

(2) Measuring and Recording of Call Detail

When access minutes are used to determine Carrier Common Line charges, they will be accumulated using call detail recorded by Telephone Company equipment except as set forth herein and Feature Group C operator and automated operatior services systems call detail such as pay telephone sent-paid, operator-DDD, operator-person, collect, credit-card, third number and/or other like calls recorded by the customer. The Telephone Company measuring and recording equipment, except as set forth herein will be associated with end office or local tandem switching equipment and will record each originating and terminating access minute where answer supervision is received. The accumulated access minutes will be summed on a line by line basis, by line group or by end office, whichever type of account is used by the Telephone Company, for each customer and then rounded to the nearest minute.

ACCESS SERVICE

4. SWITCHED ACCESS SERVICE (Cont'd)

4.2 Provision and Description of Switched Access Service Arrangements (Cont'd)

4.2.3 Rate Categories (Cont'd)

4.2.3.B. End Office (Cont'd)

4.2.3.B.(3) Carrier Common Line (Cont'd)

(f) Rate Regulations (Cont'd)

(3) Percent Interstate Use (PIU)

When the customer reports interstate and intrastate use of in-service Switched Access Service, Carrier Common Line charges will be billed only to intrastate Switched Access Service access minutes based on the data reported by the customer as set forth in 2.3.3 preceding (Jurisdictional Reports), except where the Telephone Company is billing according to actuals by jurisdiction. Intrastate Switched Access Service access minutes will, after adjustment, be used to determine Carrier Common Line Charges as set forth in 4.2.3.B.(3)(f)(4) (Determination of Premium and Non-Premium Charges) following.

(4) Determination of Premium and Non-Premium Charges

After the adjustments as set forth in 4.2.3.B.(3)(f)(3) Percent Interstate Use (PIU) preceding have been applied, when necessary, to Switched Access Service access minutes, charges for the involved customer account will be determined as follows:

ACCESS SERVICE

4. SWITCHED ACCESS SERVICE (Cont'd)

4.2 Provision and Description of Switched Access Service Arrangements (Cont'd)

4.2.3 Rate Categories (Cont'd)

4.2.3.B. End Office (Cont'd)

4.2.3.B.(3) Carrier Common Line (Cont'd)

(f) Rate Regulations (Cont'd)

(4) Determination of Premium and Non-Premium Charges (Cont'd)

(i) Access minutes for all premium rated Switched Access Service subject to Carrier Common Line charges will be multiplied by the Premium Access per minute rate as set forth in 10.2.2 following.

(ii) Access minutes for all non-premium rated Switched Access Service subject to Carrier Common Line charges will be multiplied by the Non-Premium Access per minute rate as set forth in 10.2.2 following.

(iii) Terminating Premium Access or Non-Premium Access, per minute charge(s) apply to:

- all terminating access minutes of use;

  - less those terminating access minutes of use associated with Wireless Switching Centers (WSCs).

- all originating access minutes of use associated with FGA Access Services where the off-hook supervisory signaling is forwarded by the customer's equipment when the called party answers;

ACCESS SERVICE

4. SWITCHED ACCESS SERVICE (Cont'd)

4.2 Provision and Description of Switched Access Service Arrangements (Cont'd)

4.2.3 Rate Categories (Cont'd)

4.2.3.B. End Office (Cont'd)

4.2.3.B.(3) Carrier Common Line (Cont'd)

(f) Rate Regulations (Cont'd)

(4) Determination of Premium and Non-Premium Charges (Cont'd)

(iii) Terminating Premium Access or Non-Premium Access, per minute charge(s) apply to: (Cont'd)

- all originating access minutes of use associated with calls placed to 700, 800 series and 900 numbers, less those originating access minutes of use associated with calls placed to 700, 800 series and 900 numbers for which the customer furnishes for each month a report of either the number of calls or minutes or a report of the percent of calls or minutes that terminate in a Switched Access Service that is assessed Carrier Common Line Charges.

When the customer makes this report available to the Telephone Company in advance of billing, these minutes of use will be charged on the current bill as originating minutes of use as set forth in 4.2.3.B.(3)(f)(4)(iv) following. If a billing dispute

ACCESS SERVICE

4. SWITCHED ACCESS SERVICE (Cont'd)

4.2 Provision and Description of Switched Access Service Arrangements (Cont'd)

4.2.3 Rate Categories (Cont'd)

4.2.3.B. End Office (Cont'd)

4.2.3.B.(3) Carrier Common Line (Cont'd)

(f) Rate Regulations (Cont'd)

(4) Determination of Premium and Non-Premium Charges (Cont'd)

(iii) Terminating Premium Access or Non-Premium Access, per minute charge(s) apply to: (Cont'd)

arises concerning the customer provided report, the Telephone Company will request the customer to provide the data the customer used to develop the report. The Telephone Company will not request such data more than once a year. The customer shall supply the data within 30 days of the Telephone Company request.

When this report is not available to the Telephone Company until after billing, it shall be used by the Telephone Company to calculate and post a credit to the customer's account. The credit shall be posted to the customer's account within 30 days of receipt of the report. The credit shall be calculated by multiplying the number of access minutes of use, for which a credit is determined to be applicable, times the difference between the terminating and originating Carrier Common Line charges in effect when the calls were completed.

ACCESS SERVICE

4. SWITCHED ACCESS SERVICE (Cont'd)

4.2 Provision and Description of Switched Access Service Arrangements (Cont'd)

4.2.3 Rate Categories (Cont'd)

4.2.3.B. End Office (Cont'd)

4.2.3.B.(3) Carrier Common Line (Cont'd)

(f) Rate Regulations (Cont'd)

(4) Determination of Premium and Non-Premium Charges (Cont'd)

(iv) The originating Premium Access or Non-Premium Access, per minute charge(s) apply to:

- all originating minutes of use;
  - less those originating access minutes of use associated with FGA Access Services where the off-hook supervisory signaling is forwarded by the customer's equipment when the called party answers;
  - less all originating access minutes of use associated with calls placed to 700, 800 and 900 numbers;
  - less those originating access minutes of use associated with Wireless Switching Centers (WSCs).

ACCESS SERVICE

4. SWITCHED ACCESS SERVICE (Cont'd)

4.2 Provision and Description of Switched Access Service Arrangements (Cont'd)

4.2.3 Rate Categories (Cont'd)

4.2.3.B. End Office (Cont'd)

4.2.3.B.(3) Carrier Common Line (Cont'd)

(f) Rate Regulations (Cont'd)

(4) Determination of Premium and Non-Premium Charges (Cont'd)

(iv) The originating Premium Access or Non-Premium Access, per minute charge(s) apply to: (Cont'd)

- all originating minutes of use; (Cont'd)

  - plus all originating access minutes of use associated with calls placed to 700, 800 series and 900 numbers for which the customer furnishes for each month a report of either the number of calls or minutes or a report of the percent of calls or minutes that terminate in a Switched Access Service that is assessed Carrier Common Line charges, and for which a corresponding reduction in the number of terminating access minutes of use has been made.

ACCESS SERVICE

4. SWITCHED ACCESS SERVICE (Cont'd)

4.2 Provision and Description of Switched Access Service Arrangements (Cont'd)

4.2.3.C. Where facilities permit, the Company will, at the option of the Customer, provide the following chargeable optional features.

4.2.3.C.(1) 800/888 Series Data Base Access Service

Series Data Base Access Service is provided to all customers in conjunction with FGD switched access service. When a 1+800+NXX-XXXX call is originated by an end user, the Company will utilize the Signaling System 7 (SS7) network to query an 800/888 series data base to identify the customer to whom the call will be delivered and provide vertical features based on the dialed ten digits. The call will then be routed to the identified customer over FGD switched access.

A Basic or Vertical Feature Query charge, as set forth in 12.2.2.F following, is assessed for each query launched to the data base which identifies the customer to whom the call will be delivered. The Basic Query provides the identification of the customer to whom the call will be delivered and includes area of service routing which allows routing of 800/888 series type calls by companies to different interexchange carriers based on the Local Access Transport Area (LATA) in which the call originates. The Vertical Feature Query provides the same customer identification as the basic query and vertical features which may include: (1) call validation, (ensuring that calls originate from subscribed service areas); (2) POTS translation of 800/888 series numbers; (3) alternate POTS translation (which allows subscribers to vary the routing of 800/888 series type calls based on factors such as time of day, place or origination of the call, etc.); and (4) multiple carrier routing [which allows subscribers to route to different carriers based on factors similar to those in (3)].

ACCESS SERVICE

4. SWITCHED ACCESS SERVICE (Cont'd)

4.2 Provision and Description of Switched Access Service Arrangements (Cont'd)

4.2.3.D. Common Channel Signaling/Signaling System 7 Network Connection Service

Common Channel Signaling/Signaling System 7 Network Connection Service, which is available with Feature Group C and D, where technically feasible provides a signaling path between a customer's designated Signaling Point of Interface and a Signaling Transfer Point. This service provides customers with the use of a two-way signaling path for accessing information necessary for the completion of their end user's calls. (T)

Common Channel Signaling/Signaling System 7 Networks Connection Service is comprised of two parts; a Signaling Network Access Link (consisting of Signaling Mileage Facility, Signaling Mileage Termination and Signaling Entrance Facility) and a Signaling Transfer Point Port. The Signaling Network Access Link is provided as a dedicated 56 kbps out-of-band signaling connection between the customer's Signaling Point of Interface and the Signaling Transfer Point Port on the Signaling Transfer Point. (T)

The Common Channel Signaling/Signaling System 7 Networks Connection Service is provisioned by a mated pair of Signaling Transfer Points as described in Technical Reference TR-TSV 000905 in order to ensure networks availability and reliability. The Telephone Company shall not be held liable for service outages if the customer employs technology related to the interconnection of signaling networks that do not adhere to generally accepted industry technical standards.

When Common Channel Signaling/Signaling System 7 Network Connection service is provisioned for use with SS7 Signaling, interconnection between signaling networks must occur at an Signaling Transfer Point.

Rates and charges for the Common Channel Signaling/Signaling System 7 Network Connection Signaling Transfer Point Ports and Signaling Network Access Links are contained in 12.2.4 following.

ACCESS SERVICE

4. SWITCHED ACCESS SERVICE (Cont'd)

4.2 Provision and Description of Switched Access Service Arrangements (Cont'd)

4.2.4 Descriptions and Application of Rate

4.2.4.A Recurring Rates

4.2.4.A.(1) Usage Rates for Switched Access Service are rates that apply on a per access minute or a per call basis. Access minute charges and per call charges are accumulated over a monthly period.

4.2.4.A.(2) Flat Rates for Switched Access Service are rates that apply on a per month per rate element basis.

ACCESS SERVICE

4. SWITCHED ACCESS SERVICE (Cont'd)

4.2 Provision and Description of Switched Access Service Arrangements (Cont'd)

4.2.4.B Nonrecurring Charges

Nonrecurring charges are one-time charges that apply for a specific work activity (i.e., installation or change to an existing service). The types of nonrecurring charges that apply for Switched Access Service are: installation of service and service rearrangements. These charges are in addition to the Access Order Charge as specified in 12.1.1 following.

4.2.4.B.(1) Installation of Service

A Local Transport nonrecurring installation charge, as set forth in 12.2.3.A following, will be applied per line or trunk installed.

A non-recurring Directory Access installation charge, as set forth in 12.2.3.B following, will apply per line or trunk ordered.

A non-recurring Interim NXX translation charge, as set forth in 12.2.3.C following, will apply per order.

Service Rearrangements

All changes to existing services other than changes involving administrative will be treated as a discontinuance of the existing service and an installation of a new service. The nonrecurring charge described in (1) preceding will apply for this work activity.

For conversion of FGD trunks from multifrequency address signaling to SS7 signaling or from SS7 signaling to multifrequency address signaling, nonrecurring charges will apply as set forth in 12.2.2.D.

4. SWITCHED ACCESS SERVICE (Cont'd)

4.2 Provision and Description of Switched Access Service Arrangements (Cont'd)

4.2.5 Billing Validation Service

The Company shall arrange to have its billing validation data stored in one of the existing Line Information Databases. It will be the responsibility of the Customer to identify this database through established industry procedures, and to query the billing validation data in the Line Information Databases. Based on the received query information, the Line Information Databases will respond with an SS7 formatted confirmation of validity or denial for the requested billing option. Access in Line Information Databases provides Customers with potential toll fraud detection. (T)

The Line Information Databases will contain a record for every working line number and Billed Number Group served by the Company. (T)

The Company will update the Line Information Databases information on a daily basis. (T)

Line Information Databases service is provided on an on-line, call-by-call basis. Company data accessed from the Line Information Databases shall remain the sole property of the Company, and may not be stored or reproduced by the Customer for any reason.

The Company will have procedures in place to deactivate billing validation data in the event that it is being used fraudulently.

4.2.6 Acceptance Testing

At no additional charge, the Company will, at the Customer's request, cooperatively test, at the time of the installation, the following parameters: loss, C-notched noise, C-message noise, 3-tone slope, d.c. continuity and operational signaling.

4.2.7 Ordering Options and Conditions

Access Service is ordered under the Access Order provisions set forth in Section 3.2.

ACCESS SERVICE

4. SWITCHED ACCESS SERVICE (Cont'd)

4.3 Obligations of the Company

In addition to the obligations of the Company set forth in other sections of this tariff, the Company has certain other obligations concerning the provision of Switched Access service. These obligations are as follows:

4.3.1 Network Management

The Company will administer its network to ensure the provision of acceptable service levels to all telecommunications users of the Company's network Services. Generally, service levels are considered acceptable only when both end users and Customers are able to establish connections with little or no delay encountered within the Company network. The Company reserves the right to apply protective controls, (i.e., those actions, such as call gapping, which selectively cancel the completion of traffic), over any traffic carried over its network, including that associated with a Customer's Switched Access Service. Generally such protective measures would only be taken as a result of occurrences such as failure or overload of Company or Customer facilities, natural disasters, mass calling or national security demands. The Customer will notify the Company of anticipated peaked services as stated below. Based on the information provided, the Company will work cooperatively with the Customer to determine the appropriate level of control. In the event that the protective controls applied by the Company result in the complete loss of service by the Customer, the Customer will be granted a credit allowance for service interruption as set forth in 2.6.

When a Customer uses the Company's facilities to offer services for which a substantial call volume or peaked service is expected during a short period of time, the Customer must notify the Company at least 24 hours in advance of each peak period. For events scheduled during weekends or holidays, the Company must be notified no later than 5:00 p.m. local time the prior business day. Notification should include the nature, time, duration, and frequency of the event, an estimated call volume, and the NPA NXX and line number(s) to be used. On the basis of the information provided, the Company may invoke network management controls if required to reduce the probability of excessive network congestion. The Company will work cooperatively with the Customer to determine the appropriate level of such control. Failure to provide prescribed notification may result in Customer caused network congestion, which could result in discontinuance of service.

ACCESS SERVICE

5. SPECIAL CONSTRUCTION

5.1 Special Construction

5.1.1 Basis for Rates and Charges

Rates and charges for special construction will be determined by the Company on an Individual Case Basis and based, in part, on the costs incurred by the Company and may include (1) non-recurring type charges, (2) recurring type charges, (3) termination liabilities, or (4) combinations thereof.

5.1.2 Termination Liability

To the extent that there is no other requirement for use by the Company, a termination liability may apply for facilities specially constructed at the request of the Customer.

5.1.2.A The termination liability period is the initial service term with respect to said specially constructed facilities.

5.1.2.B The amount of maximum termination liability is equal to the rates and charges established pursuant to 5.1.1 above.

5.1.2.C The applicable termination liability charge is based on the normal method for calculating the unpaid balance of a term obligation. The amount of such charge is obtained by multiplying the sum of the amounts determined as set forth in Section 6 by a factor related to the unexpired period of liability and the discount rate for return and contingencies. This product is adjusted to reflect applicable taxes.

5.2 Individual Case Basis Arrangement

When the Company furnishes a facility or service for which a rate or charge is not specified in the Company's tariffs, charges will be determined on an Individual Case Basis. Specialized rates or charges will be made available to similarly situated Customers on a nondiscriminatory basis.

ACCESS SERVICE

6. BILLING NAME AND ADDRESS

Billing Name and Address (BNA) provides the billing name and address of an end-user who has an Automatic Number Identification recorded by the Customer (interexchange carriers, operative service providers, enhanced service providers and any other provider of interstate telecommunication services) for telecommunications services rendered by the Customer to its end-user. The receipt of this information will allow the Customer to provide its own billing to end-users who may have not have established a formal relationship with the Customer.

BNA is provided for the sole purpose of permitting the Customer to bill its telephone communications services to its end-users and may not be resold or used for any other purpose, including marketing activity such as market surveys or direct marketing by mail or by telephone. The Customer may not use BNA information to bill for merchandise, gift certificates, catalogs or other services or products.

6.1 Undertaking of the Company

6.1.1 All requests for information will be by facsimile.

6.1.2 The Company will specify the format in which requests are to be submitted.

6.1.3 The BNA information will be provided for the calling number furnished to the extent a billing name and address exists in the Company's records. BNA information will not be provided for those end-users who have requested that their BNA not be disclosed for collect and bill to third party calls.

6.1.4 The Company will provide the most current BNA information resident in its data base. Due to normal end-user account activity, there may be instances where the BNA information provided is not the BNA that was applicable at the time the message originated.

6.2 Obligations of the Customer

6.2.1 With each order for BNA Service, the Customer shall identify the authorized individual, the address, and/or the facsimile to receive the BNA information.

ACCESS SERVICE

6. BILLING NAME AND ADDRESS (Cont'd)

6.2 Obligations of the Customer (Cont'd)

6.2.2 The Customer shall institute adequate internal procedures to insure that BNA information, including that related to "confidential" non-published and non-listed telephone numbers, is used only for the purpose set forth in this tariff and that BNA information is available only to those Customer personnel or agents with a need to know the information.

6.2.3 The Customer shall not publicize or represent to others that the Company jointly participates with the Customer in the development of the Customer's end-user records, accounts, data bases or market data, records files and data bases or other systems it assembles through the use of BNA Service.

ACCESS SERVICE

7. DIRECTORY ASSISTANCE SERVICE

The Telephone Company will provide Directory Assistance (DA) Service to a customer from Directory Assistance Service locations (DA locations). DA locations are either primary or subtending. Primary DA locations are those to which terminating DA calls for the NPA first complete. Primary DA locations either process the telephone number request or, if necessary, forward the call to a subtending DA location for processing, DA service rates are assessed by the primary DA location only. Subtending DA locations are compensated by contractual arrangements between Telephone Companies.

7.1 General Description

Telephone Company provided DA Service is available to customers for their use in furnishing DA services to end users. It provides for the use of Directory Access Service between the premises of the ordering customer and the DA location(s), use of DA access equipment, and use of DA operators to provide telephone numbers.

Directory Access Service will be provided between the customer designated premises and the DA location by the Telephone Company. Rates and charges for Directory Assistance Service are set forth in 12.4 following.

7.1.1 Description and Provision of Directory Assistance Service

A Telephone Company DA operator, when furnished a name and locality, will provide or attempt to provide the telephone number listed in the Telephone Company DA records associated with the name given, at the rates and charges as set forth in 12.4 following. The Telephone Company's contact with the customer's end user shall be limited to that effort necessary to process a customer's end user's request for a telephone number; and the Telephone Company will not transfer, forward or redial a customer's end user call to any other location for any purpose other than the provision of DA Service.

ACCESS SERVICE

7. DIRECTORY ASSISTANCE SERVICE (Cont'd)

7.1 General Description (Cont'd)

7.1.2 Rate Categories

There are two rate categories which apply to Directory Assistance Service; - Directory Assistance Service Call

7.1.2.A Directory Assistance Service Call

The Directory Assistance Semite Call rate category provides for the use of general DA Services such as operators and DA access equipment necessary to provide DA Service to a customer.

7.1.2.B Directory Transport Service

Directory Transport Service provides the transmission facilities and transport termination between the premises of the ordering customer and the DA location. For purposes of determining Directory Transport Mileage, distance will be measured from the wire center that normally serves the customer premises to the DA location(s).

Directory Transport is a two-way voice frequency transmission path composed of Switched Access Local Transport facilities as set forth herein. The two-way voice frequency path transports calls in the terminating direction (from the premises of the ordering customer to the DA location). The following rate elements, which are more fully described herein, are applicable.

ACCESS SERVICE

7. DIRECTORY ASSISTANCE SERVICE (Cont'd)

7.1 General Description (Cont'd)

7.1.2.B Directory Transport Service (Cont'd)

- Entrance Facility for the transport of the DA call from the customer's premises to the serving wire center of that premises.

- Direct Trunked Transport (i.e., Direct Trunked Facility and Direct Trunked Termination) for the transport of the DA call from the customer's serving wire center to the DA location without switching at a tandem or from the serving wire center to the tandem.

- Tandem Switched Transport (i.e., Tandem Switched Facility, Tandem Switched Termination, and Tandem Switching) for the transport of the DA call from the tandem to the DA location.

- Transport Interconnection Charge for the Local Transport costs that are not recovered by the Entrance Facility, Direct Trunked Transport, Tandem Switched Transport, Multiplexing, or dedicated signaling (i.e., SS7) rates.

- Multiplexing DS3 to DS1 Multiplexing charges apply when a High Capacity DS3 Entrance Facility or Direct Trunked Facility is connected with High Capacity DS1 Direct Trunked Transport. The DS3 to DS1 multiplexer will convert a 44.736 Mbps channel to 28 DS1 channels using digital time division multiplexing.

DS1 to Voice Grade Multiplexing charges apply when a High Capacity DS1 Entrance Facility or Direct Trunked Facility is connected with Voice Grade Direct Trunked Transport. A DS1 to Voice Grade Multiplexing charge does not apply when a High Capacity DS1 Direct Trunked Facility is terminated at an electronic end office and only Switched Access Service is provided over the DS1 facility (i.e., Voice Grade Special Access channels are not derived). The DS1 to voice multiplexer will convert a 1.544 Mbps channel to 24 Voice Grade channels.

ACCESS SERVICE

7. DIRECTORY ASSISTANCE SERVICE (Cont'd)

7.1 General Description (Cont'd)

7.1.2 Rate Categories (Cont'd)

7.1.2.B Directory Transport Service (Cont'd)

Multiplexing is only available at wire centers that are so equipped.

The customer will specify whether the Directory Access Service is to be routed directly to a DA location or through an access tandem switch appropriately equipped for DA measurement and served by DA trunks to the DA location when such an access tandem switch is available. The combination of Feature Group B, C or D Switched Access Service with DA Service will only be provided at such available and appropriately equipped access tandem switches.

When Directory Transport is provided using a Direct Trunked Transport to the DA location, no address signaling is provided. When Directory Transport is provided with the use of an access tandem switch, wink start-start pulsing signaling is provided at the access tandem switch. When access tandem routing is provided, the customer shall address each call to the DA location using NPA + 555 + 1212 or when required by the Telephone Company, 555-1212. Only NPA codes handled by the DA location served by the access tandem switch will be processed.

Directory Transport is provided with one of the Local Transport Interface Groups as set forth herein.

7.1.3 Special Facilities Routing

A customer may request that Directory Access Service be provided via Special Facilities Routing. The regulations, rates and charges for Special Facility Routing (Avoidance, Diversity and Cable Only) are as set forth herein.

7.1.4 Design Layout Report

The Telephone Company will provide to the customer the makeup of the facilities and services provided under this section as Directory Access Service. This information will be provided in the form of a Design Layout Report similar to that set forth herein. Design Layout Reports for Directory Access Service will be provided only when specifically requested by the customer. The Design Layout Report will be provided to the customer at no charge, and will be reissued or updated whenever the facilities provided for the customer's use are materially changed.

ACCESS SERVICE

7. DIRECTORY ASSISTANCE SERVICE (Cont'd)

7.2 Undertaking of the Telephone Company

7.2.1 Number of Telephone Number Requests

A maximum of two (2) requests for telephone numbers will be accepted per call to Directory Assistance and DA operators will not transfer, forward or redial the call to another location for any purpose other than the provision of DA Service.

7.2.2 Telephone Number Availability

A telephone number which is not listed in DA records will not be available to the customer's end user.

7.2.3 Selection of DA Locations

The Telephone Company will specify the DA location which provides the DA Service for each numbering plan area code (NPA).

When it becomes necessary to change a DA location, as determined by the Telephone Company, the Telephone Company will notify the involved customers six months prior to the change. For such changes, the regulations as set forth herein apply.

7.2.4 Transmission Specifications

Each Directory Assistance Service transmission path is provided with standard transmission specifications, either Type A or B, as set forth respectively herein. The specifications associated with the parameters are guaranteed to the DA location. The standard for a particular transmission path is dependent upon the following:

Whether Directory Access Service is provided in combination with Feature Group B, C or D Switched Access Service, or

When not provided in combination with Switched Access Service, whether routed direct or via an access tandem switch.

The available transmission specifications are set forth herein.

ACCESS SERVICE

7. DIRECTORY ASSISTANCE SERVICE (Cont'd)

7.2 Undertaking of the Telephone Company (Cont'd)

7.2.5 Testing

7.2.5.A Acceptance Testing

The acceptance testing capabilities for Directory Access Service traffic routed through an access tandem are the same as those for the associated Feature Group C or D end office switching. The acceptance testing for Directory Access Service traffic routed directly, or routed in separate trunk groups through an access tandem, to the DA location, will be the same as that for Switched Access Service as set forth herein.

7.2.5.B Routine Testing

Routine testing capabilities for Directory Access Service traffic routed through an access tandem are the same as those for the associated Feature Group C or D end office switching. Routine testing capabilities for Directory Access Service traffic routed directly, or routed in a separate trunk group through an access tandem, to the DA location, will be as set forth herein (Additional Manual Testing).

7.2.6 Determination of Number of Transmission Paths

The number of Directory Transport transmission paths provided is based on the customer's order and is determined by the Telephone Company in a manner similar to Switched Access Service transmission paths as set forth herein.

7.2.7 Supervisory Signaling

Trunk side switching is provided at the DA Service access location. The DA Service access location will provide trunk answer and disconnect supervisory signaling.

ACCESS SERVICE

7. DIRECTORY ASSISTANCE SERVICE (Cont'd)

7.3 Obligations of the Customer

In addition to the obligations of the customer as set forth herein, the customer has certain specific obligations concerning the use of Directory Assistance Service. These obligations are as follows:

7.3.1 Jurisdictional Reports

Directory Transport may, at the option of the customer, be provided for both interstate and intrastate communications. When the customer requests such mixed access, the interstate Directory Transport charges will be determined by the Telephone Company using the data furnished by the customer as set forth herein.

7.3.2 Supervisory Signaling

The customer facilities at the premises of the ordering customer shall provide the necessary on-hook and off-hook supervision.

7.3.3 Ordering of Separate Trunk Groups

When requested by the Telephone Company, the customer shall order a separate trunk group for DA Service for each NPA. The conditions when the customer will be requested to order separate trunk groups for each NPA are set forth herein.

7.3.4 Notice of Discontinuance of Service

DA Service is ordered and renewed for a minimum period of six months at a time, as set forth herein. Not later than three months prior to the end of any six month period, the customer shall notify the Telephone Company if the service is to be discontinued at the end of that period.

ACCESS SERVICE

7. DIRECTORY ASSISTANCE SERVICE (Cont'd)

7.4 Rate Regulations

This section contains the specific regulations governing rates and charges that apply for Directory Assistance Service.

7.4.1 Nonrecurring Charges

Nonrecurring charges for DA Service are one-time charges that apply for a specific work activity (i.e., installation, change to an existing service and DA Service rearrangements).

7.4.1.A Installation of Service

Nonrecurring Local Transport Installation and Direct Trunked Transport Activation charges as set forth herein following are applied as set forth herein to each Directory Access Service installed.

7.4.1.B DA Service Rearrangements

All changes to existing services other than changes involving administrative activities will be treated as a discontinuance of the existing service and an installation of a new service.

7.4.2 Directory Assistance Service Call Charge

The Directory Assistance service call charge, as set forth in 12.4 following, applies for each call to DA Service. A call is a call which has been answered by a DA operator. The charge applies whether or not the DA operator provides the requested telephone number. The number of calls answered by DA operators will be accumulated by Telephone Company measuring equipment. A credit for the provision of an incorrect telephone number will be applied as set forth in 12.4 following.

ACCESS SERVICE

7. DIRECTORY ASSISTANCE SERVICE (Cont'd)

7.4 Rate Regulations (Cont'd)

7.4.3 Transport Service

The premium Local Transport charges set forth herein are also applicable to Directory Transport Service and will be assessed on the same basis as the Switched Access Local Transport rate elements set forth herein preceding:

Entrance Facility

Direct Trunked Transport

Tandem Switched Transport

Multiplexing

Transport Interconnection Charge

7.4.4 Minimum Periods

The minimum period for which DA Service and the Directory Access Service is provided and for which charges apply is six months. A minimum period of six months applies for each additional period of service ordered or extended.

If DA Service is discontinued prior to the end of each six month period, the charges that apply for the remaining months are the non-recoverable costs. Such costs include the non-recoverable cost of equipment and material ordered, provided or used, plus the non-recoverable cost of installation and removal including the costs of engineering, labor supervision, transportation, rights-of-way and other associated costs less estimated net salvage.

The minimum period for which High Capacity DS3 Entrance (C) Facilities or High Capacity DS3 Direct Trunked Transport is provided is twelve months.

ACCESS SERVICE

7. DIRECTORY ASSISTANCE SERVICE (Cont'd)

7.4 Rate Regulations (Cont'd)

7.4.5 Minimum Monthly Charge

DA service is subject to a minimum monthly charge. The minimum monthly charge is calculated as follows:

The minimum monthly charge for Directory Assistance Service calls is the charge as set forth herein following for the actual usage for the month.

For Directory Transport rate element, the minimum monthly charge the customer will be assessed will be the usage charges based on actual usage. For flat rated Directory Transport rate elements, the minimum monthly charge is the sum of the recurring charges prorated to the number of days or major fraction of days based on a 30 day month. Rates for Directory Transport are set forth in herein following.

7.4.6 DA Service Rearrangements

Nonrecurring charges apply for service rearrangements. Service rearrangements and the regulations concerning the application of associated nonrecurring charges are as set forth herein.

7.4.7 Moves

A move involves a change in the physical location of the point of termination at the customer designated premises or of the customer designated premises. Moves will be treated as set forth herein and all associated nonrecurring charges will apply. Minimum period requirements will be established at the new location as set herein. The customer will also remain responsible for satisfying all outstanding minimum period charges for the discontinued service.

ACCESS SERVICE

7. DIRECTORY ASSISTANCE SERVICE (Cont'd)

7.4 Rate Regulations (Cont'd)

7.4.8 Credit Allowance for Service Outages and Incorrect Numbers

7.4.8.A When the DA location or DA operator equipment or terminals are out of service due to a Telephone Company equipment failure a credit allowance is provided. When an incorrect number is provided and a customer DA call has been answered by a DA operator, a credit allowance is provided. The credit allowance provided is equal to the rate for a Directory Assistance Service Call as set forth in 12.4. The credit will be applied to the customer's charges.

7.4.8.B In addition to the credit as set forth in (A) preceding, when a DA operator or DA equipment provides an incorrect number for a call and the customer reports such occurrences to the Telephone Company, a credit allowance for the Switched Access portion of the call in the originating LATA of such DA call will apply. The credit will be as set forth in (C) following. When the customer reports such a call and the number requested, the number provided and the reason the number provided is incorrect, the number of calls for which a credit will apply will be developed by the Telephone Company in cooperation with the customer.

7.4.8.C When a DA call is not completed due to the failure of Directory Access Service to DA locations, DA access equipment or DA operator activities, a credit allowance for the Switched Access Service portion in the originating LATA of such DA call will apply. When the customer reports such a call and DA number dialed, time of the call and the date of the call, the number of calls for which a credit will apply will be developed by the Telephone Company in cooperation with the customer. The credit will be as set forth in 12.4. Credit allowances for other service interruptions will be provided as set forth herein.

ACCESS SERVICE

8. BILLING AND COLLECTION SERVICES

The Company, at the option of an IC, will provide the following Billing and Collection Services:

Recording Service, Billing Service, Billing Analysis Service, and Billing Information Service

For the purposes of Section 8. of this Tariff only, the Company will provide Billing and Collection Services to clearinghouse agents who are authorized to act as agents for certified ICs. The clearinghouse agent can obtain only billing and collection services from the Company for telecommunications services on behalf of certificated ICs. All other access services will be limited to those entities which have been certificated and authorized by the Commission to provide intrastate long distance telecommunication service. When a clearinghouse acts as an agent for ICs, the clearinghouse will comply with the same requirements and obligations that apply to ICs under this Tariff. In addition, specific requirements for clearinghouse agents have been specified under 8.2 Billing Service.

The Company will also provide billing and collection services to certified Customer Owned Coin Operated Telephone (COCOT) Providers, directly or through a clearinghouse, provided that the COCOT Providers comply with the following requirements:

- The Providers must apply for and receive specific authority from the Commission to provide InterLATA service;
- InterLATA toll messages only will be billed under this section of this Tariff;
- Collect calls will not be billed which have not been actively accepted by the called party (e.g., calls made from automated sets that default to billing to the called party if the called party does not disconnect within a given time period);
- All requirements and obligations that apply to ICs under this Tariff will apply; and
- All rules and regulations will apply that are required by the Commission for Alternate Operator Service (AOS) Providers which provide intrastate long distance telecommunications service.

The Company will also provide Billing and Collection Services to certified ICs or COCOT Providers providing service to confinement facilities provided that such Providers comply with the following:

- The providers must apply for and receive specific authority from the Commission to provide interLATA, intraLATA, and local "0+" collect service to confinement facilities;
- InterLATA, intraLATA and local collect only calls will be billed under this Section of this Tariff;
- Only automated collect calls may be billed. Automated collect calls are calls placed and billed to the called telephone number without the assistance or intervention of a human operator;

ACCESS SERVICE

8. BILLING AND COLLECTION SERVICES (Cont'd)

- Collect calls will not be billed which have not been actively accepted by the called party (e.g., calls made from automated sets that default to billing to the called party if the called party does not disconnect within a given time period);
- All requirements and obligations that apply to ICs under this Section of this Tariff will apply;
- All rules and regulations will apply that are required by the Commission for ICs or COCOTs which provide confinement facility service; and
- The IC or COCOT must provide a unique carrier identification code for messages sent from confinement facilities which will distinguish such messages from other types of service. Messages from confinement facilities may not be combined with an IC's or COCOT's other messages.

8.1 Recording Service

The Company will provide Recording Service in association with the offering of FGC and FGD, 3 for IC messages that can be recorded by Company provided automatic message accounting equipment. In addition, where the Company records the IC messages on manual tickets, the Company will provide Recording Service for the manual tickets.

The Company will provide Recording Service in its operating territory.

When answer supervision is provided by the IC, the term "IC Message" used herein denotes a completed intrastate call originated by an IC's end user. An IC message begins when answer supervision from the terminal location of the ordering IC is received by Company recording equipment indicating that the called party has answered. An IC message ends when disconnect supervision is received by Company recording equipment from either the IC terminal location or the IC's end user premises from which the call originated.

When answer supervision is not provided from the IC terminal location, the term "IC Message" used herein denotes an intrastate call originated by an IC's end user where a start time and a disconnect time are received by Company recording equipment. For purposes of measurement, the IC message begins when the wink supervisory signal is received and ends when disconnect supervision is received by Company recording equipment from either the terminal location of the ordering IC or the IC's end user premises from which the call originated.

Calls where the IC terminal location does not provide answer supervision are not permitted.

ACCESS SERVICE

8. BILLING AND COLLECTION SERVICES (Cont'd)

8.1 Recording Service (Cont'd)

An IC message begins in the originating direction when the off-hook supervision provided from the terminal location of the ordering IC is received by the Company recording equipment. An IC message begins in the terminating direction when answer supervision is received by the Company recording equipment indicating the called party has answered. An IC message ends in the originating direction when disconnect supervision is received by the Company recording equipment from the terminal location of the ordering IC. An IC message ends in the terminating direction when disconnect supervision is received by the Company recording equipment from either the terminal location of the ordering IC or the called party.

The IC may purchase recording for 101XXXX, and/or 1+ calls. In addition, the IC may purchase recording for either message-billed service, WATS or WATS-type service, and/or 800 Service where it is technically and economically feasible for the Company to provide such service.

8.1.1 General Description

8.1.1.A Recording Service is the recording of the details of an IC Message and, when requested by the IC, the provision of those details to the IC. Recording Service includes recording, assembly and editing, and provision of recorded IC message detail.

8.1.1.B Recording is the entering on magnetic tape or other acceptable media the details of IC messages originated through Switched Access for which answer and disconnect supervision has been received. Recording is provided twenty-four hours a day, seven days a week.

8.1.1.C Assembly and editing is the aggregation of the recorded IC message details to create individual messages and the verification that the data required for rating, in accordance with the standard format established by the Company, is present. Assembly and editing is performed at least once a week.

8.1.1.D Provision of IC message detail is the provision of magnetic tapes containing the assembled and edited IC message detail and, when requested by the IC, data-transmitting the assembled and edited IC message detail to the IC, sorting the message detail, and providing name and address information for the message detail. Except for lost or damaged records, the recorded detail will be available to the IC not more that five business days after the date all the detail requested by the IC was processed by the Company.

ACCESS SERVICE

8. BILLING AND COLLECTION SERVICES (Cont'd)

8.1 Recording Service (Cont'd)

8.1.2 Undertaking of the Company

8.1.2.A When answer supervision is provided from the IC terminal location, the Company will record all IC messages carried that are available to the Company provided recording equipment or operators. When answer supervision is not provided from the IC terminal location, the Company will record messages that are available to Company provided recording equipment or operators. Special arrangements must be made to provide these recordings, therefore the time necessary to implement the service and the charges to provide these recordings will be determined on an individual case basis. Unavailable IC messages will not be recorded. The recording equipment will be provided at locations selected by the Company. Assembly and editing will be performed on all IC messages recorded during the billing period established by the Company. Except as set forth in 8.1.2.F and 8.1.3 following, recorded message detail from previous billing periods will not be recovered and made available to the IC.

8.1.2.B A standard format for the provision of the recorded IC message detail will be established by the Company and provided to the IC. If, in the course of Company business, it is necessary to change the format, the Company will notify the involved ICs six months prior to the change.

8.1.2.C The recorded IC messages provided to the IC will, when requested by the IC, be sorted to furnish detail to meet the IC's need. Also name and address information will, when requested by the IC and to the extent the required names and addresses are available in the Company customer information data bases, be provided for the recorded IC message detail. The sorting will be provided in accordance with the specifications the IC provides when it orders recorded IC message detail with sorting. If the information necessary to sort the recorded message detail as requested by the IC is not available in the recorded message detail (i.e., a sort based on any other information other than calling number or called number), the Company will provide the sorting if (1) the information necessary to perform the sort is contained in its customer information data bases, or (2) the IC provides the necessary information. If the sorting is to be performed using information which is confidential due to legal, national security, end user or regulatory imposed requirements, the information will not be used unless the IC secures written

ACCESS SERVICE

8. BILLING AND COLLECTION SERVICES (Cont'd)

8.1 Recording Service (Cont'd)

8.1.2 Undertaking of the Company (Cont'd)

8.1.2.C (Cont'd)

permission from the end user for the Company to use such information as requested by the IC. The name and address information will be provided with the recorded IC message detail and included on the magnetic tapes containing the recorded IC message detail. The name and address information will be provided in a format in accordance with the specifications the IC provides when it orders recorded IC message detail. The name and address information will be obtained by the Company from its customer information data bases. The name and address information will be provided for the calling number shown in the recorded IC message detail to the extent a name and address exists in the Company customer information data bases (e.g., some calling number names and addresses may be confidential). If the name and address information for a specific calling number is confidential due to legal, national security, end user or regulatory imposed requirements, the name and address information will not be used unless the IC secures written permission from the end user for the Company to use the information as requested by the IC.

8.1.2.D Recorded IC message detail with or without sorting and names and addresses will be provided to an IC as set forth in E. following. The Company will determine the number of magnetic tapes or data files required to provide the recorded message detail to the IC.

8.1.2.E. At the request of an IC, magnetic tapes containing the recorded IC message details with or without sorting and names and addresses will be provided to the IC as part of Recording Service. The magnetic tapes will be provided without the return of previously supplied tapes. The Company will supply the magnetic tapes. Unless specified otherwise by the IC, the magnetic tapes will be sent to the IC via first class U.S. Mail service. However, the IC may pick up the magnetic tapes at a location designated by the Company or request that the detail on the Magnetic tapes or in a data file be data-transmitted to the IC. When the IC message details are data-transmitted to an

ACCESS SERVICE

8. BILLING AND COLLECTION SERVICES (Cont'd)

8.1 Recording Service (Cont'd)

8.1.2 Undertaking of the Company (Cont'd)

8.1.2.E (Cont'd)

IC location, the data transmission charges will be determined on an individual case basis. When the IC does not wish to receive the recorded IC message details except when sorting and name and address information is provided, and the Company receives notice from the IC at least two weeks prior to the date the details would be sent to the IC, the charge as set forth in 8.1.7 following does not apply. When sorting and name and address information is provided and the IC does not wish to receive the recorded IC message detail, the terms and conditions will be as set forth in the individual case basis agreement.

8.1.2.F Recorded IC message detail which is used at the request of the IC to provide Message Processing and Message Bill Processing Service is not retained by the Company for longer than 45 days. The rated but unbilled message detail and the billed message detail is retained for reference (i.e., on paper or microfiche) in place of the recorded IC message detail. For recorded IC message detail not used by Message Processing Service at the IC's request, the Company will make every reasonable effort to recover recorded IC message detail previously made available to the IC and make it available again for the IC. The charges as set forth in 8.1.7 following will apply for all such detail provided. When the recorded IC message details are data-transmitted to an IC location, the data transmission charges will be determined on an individual case basis. Such a request must be made within 30 days from the date the details were initially made available to the IC.

8.1.3 Liability of the Company

Not withstanding 2.1.3 preceding, the Company liability for Recording Service is as follows:

8.1.3.A If IC message detail is not available because the Company lost or damaged tapes or incurred recording system outages, the Company will estimate the volume of lost IC messages and associated revenue based on previously known values. This estimated IC message volume will be included along with the IC message detail provided to the IC and/or provided for Message Processing Service. In such events, the extent of the Company's liability for damages shall be limited to the granting of a corresponding credit adjustment to the IC amounts due to account for the unbillable revenue.

ACCESS SERVICE

8. BILLING AND COLLECTION SERVICES (Cont'd)

8.1 Recording Service (Cont'd)

8.1.3.B When the Company is notified that due to error or omission incomplete data has been provided to an IC, the Company will make every reasonable effort to locate and/or recover the data and provide new magnetic tapes to the IC at no additional charge. Such request to recover the data must be made within 30 days from the date the details were initially made available to the IC. If the data cannot be recovered, the extent of the Company's liability for damages shall be limited as set forth in 8.1.3.A preceding.

8.1.3.C In the absence of willful misconduct, no liability for damages to the IC, or other entity or person other than as set forth in 8.1.3.A and 8.1.3.B preceding shall attach to the Company for its action or the conduct of its employees in providing Recording Service.

8.1.4 Obligations of the IC

8.1.4.A The IC shall order Recording Service under a Special Order. The IC shall order Recording Service at least one month prior to the date when the IC message detail is to be recorded.

8.1.4.B The IC shall order provision of recorded IC message detail without sorting or name and address information at least one month prior to the date when it wishes to receive the recorded message detail. However, the IC may wish to receive magnetic tapes of the recorded detail without sorting or name and address information or have the recorded detail data-transmitted to an IC location at some times and not at others. Therefore, a change in the provision of recorded IC message detail without sorting or name and address information to the IC will be accommodated provided the IC gives two weeks advance written notification to the Company. For recorded IC message detail with sorting and/or name and address information, the IC shall order the detail in accordance with the terms and conditions of the individual case basis established and filed in this Tariff to cover the provision of recorded IC message detail with sorting and/or name and address information.

8.1.4.C The IC's terminal location shall provide such signals as may be required for the proper operation of the Company's automatic message accounting equipment used to perform the detail recordings.

ACCESS SERVICE

8. BILLING AND COLLECTION SERVICES (Cont'd)

8.1 Recording Service (Cont'd)

8.1.5 Payment Arrangements and Audit Provision

8.1.5.A Audit Provision

8.1.5.A.(1) Upon reasonable written notice by the IC to the Company, the IC shall have the right through its authorized representative to examine and audit, during normal business hours, and at reasonable intervals as determined by the Company, all such records and accounts as may under recognized accounting practices contain information bearing upon the recording of messages for which amounts may be payable to the IC. Adjustment shall be made by the proper party to compensate for any errors or omissions disclosed by such examination or audit. Neither such right to examine and audit nor the right to receive such adjustment shall be affected by any statement to the contrary, appearing on checks or otherwise, unless such statement expressly waiving such right appears in a letter signed by the authorized representative of the party having such right and delivered to the other party.

8.1.5.A.(2) All information received or reviewed by the IC or its authorized representative is to be considered confidential and is not to be distributed, provided or disclosed in any form to anyone not involved in the audit, nor is such information to be used for any other purpose.

8.1.5.B Minimum Period and Minimum Monthly Charge

8.1.5.B.(1) The minimum period for which Recording Service without sorting and/or name and address information is provided and for which charges apply is one month.

ACCESS SERVICE

8. BILLING AND COLLECTION SERVICES (Cont'd)

8.1 Recording Service (Cont'd)

8.1.5 Payment Arrangements and Audit Provision (Cont'd)

8.1.5.B.(2) The minimum monthly charges are the charges for IC messages recorded, IC messages assembled and edited, (except when Message Processing Service is ordered for the same monthly period), and when ordered by the IC, provision of IC message detail without sorting and/or name and address information on magnetic tapes or date files. If the service is cancelled or discontinued prior to entering the IC message detail on magnetic tapes or data files, the minimum monthly charge will be the charge for all IC messages recorded, assembled and edited for a 30 day period. The Company will use the most recent 30 day period for which data is available to determine the minimum charge.

8.1.5.C Cancellation of a Special Order

8.1.5.C.(1) An IC may cancel a Special Order for Recording Service on any date prior to the service date. The cancellation date is the date the Company receives written or verbal notice from the IC that the Special Order is to cancelled. The verbal notice must be followed by written confirmation within 30 days. The service date for Recording Service is the date the IC requests the recordings to start.

8.1.5.C.(2) When an IC cancels a Special Order for Recording Service after the order date but prior to the start of service, the minimum monthly charges will apply.

8.1.5.D Changes to Special Orders

When an IC requests material changes to a pending Special Order for Recording Service, the pending Special Order will be cancelled and the requested changes will be undertaken if they can be accommodated by the Company under a new Special Order. Material changes to a pending Special Order for Recording Service include changes in the location and/or number of Company recording locations, changes in sorting parameters, provision of end user phone number and address, provision of data transmission to an IC location of IC recorded message detail, and changes in schedules, dates or intervals for receipt of IC recorded message detail. Non-material changes to a pending Special Order include changes in IC name, IC address and IC requests to receive Recording Service output at the Company location instead of through U. S. Mail. All cancellation charges as set forth in C. preceding will apply for the cancelled Special Order.

ACCESS SERVICE

8. BILLING AND COLLECTION SERVICES (Cont'd)

8.1 Recording Service (Cont'd)

8.1.6 Rate Regulations

8.1.6.A For each IC message recorded, the recording and the assembling and editing charges apply except when the IC orders Message Processing Service. When Message Processing Service as set forth in 8.2.1 following is ordered for South Carolina and for the same month that Recording Service is ordered, the assembling and editing charge does not apply per IC message. The charges for recording and for assembly and editing apply per message recorded and per message assembled and edited whether or not the IC's schedule of rates specifies billing on a per message basis or any other basis.

8.1.6.B The per Special Order charge applies for each Special Order accepted by the Company for Recording Service.

8.1.6.C When message detail is entered on a data file or magnetic tape for provision of message detail to an IC, the per tape charge applies for each data file or magnetic tape prepared, and the per record charge applies for each record processed. A record is a logical grouping of information as described in the programs that process the information and load the magnetic tapes or data file. The Company will determine the charges based on the number of data files or magnetic tapes prepared and on its count of the records processed. The number of records processed will be determined using the number of records input to or the number of records output from the programs that process the information and load the magnetic tapes or data file, whichever number of records is higher.

8.1.6.D Program and Development charges as set forth in 12.5 following, apply for the hours required to design, develop, test and maintain the necessary program for recording service.

8.2 Billing Service

At the request of an IC, the Company with reasonable notice and reasonable effort, will provide Billing Service.

The Company will provide Billing Service in its operating territory. When the IC supplies the input records, the Company will process the input records supplied by the IC as set forth in 8.2.1 following.

ACCESS SERVICE

8. BILLING AND COLLECTION SERVICES (Cont'd)

8.2 Billing Service

The Company will provide Message Billing Service as set forth in 8.2.1.

The Company will provide Bill Processing Service only on the condition that it purchases the accounts receivable, if any, from the IC as set forth in 8.2.2 following.

The Company will not render bills under this Tariff for the provision and/or delivery of telegrams, flowers, gifts, wine, and other products or for non-telecommunications services offered by an IC.

8.2.1 Message Billing Service

Message Billing Service consists of Message Processing Service and Bill Processing Service.

8.2.1.A General Description

8.2.1.A(1) Message Processing Service

(a) Message Processing Service is the transforming of the recorded IC call details into rated messages in preparation for billing. Message Processing Service includes initial data entry and rating of messages.

(b) Initial data entry is the assembly of recorded IC call details into IC messages. This function includes editing and verification of recorded details to assure that the data required for rating are present.

(c) Rating of IC messages is the computing of applicable charges for each IC message based on the IC provided schedule of rates. Rating also includes the preparation of IC message detail for input to Bill Processing Service, the IC, or other entities.

(d) Further, rating is always performed and editing may be performed coincident with the implementation of a change in the IC's schedule of rates.

ACCESS SERVICE

8. BILLING AND COLLECTION SERVICES (Cont'd)

8.2 Billing Service (Cont'd)

8.2.1 Message Billing Service (Cont'd)

8.2.1.A General Description (Cont'd)

8.2.1.A(2) Bill Processing Service

(a) Bill Processing Service is the preparation of bills for message-billed service and bulk-billed service, mailing of statements of the amounts due for service received from the IC and the collection of deposits and monies due from the end users. Bill Processing Service includes message-billed (when necessary) and bulk-billed account establishment, posting of rated messages and rate elements, rendering of bills, collection of deposits, receiving payments, maintenance of accounts, treatment of accounts, message investigation, and inquiry (when ordered by the IC).

(b) Bulk-billed service is a billing service for an end user account with a WATS access line or WATS type service access line where individual IC messages are not posted to the account and are not listed on the bill rendered to the end user.

(c) Message-billed service is a billing service as set forth in (1), (2), or (3) following.

(1) An end user account with an end user common line where individual IC messages are posted to the account and are listed on the bill rendered to the end user. Message-billed service is also a billing service for an IC's credit card end user account without an end user common line or WATS access line or WATS-type service access line where individual messages or groups of messages are posted to the account and listed on the bill rendered to the end user.

ACCESS SERVICE

8. BILLING AND COLLECTION SERVICES (Cont'd)

8.2 Billing Service (Cont'd)

8.2.1 Message Billing Service (Cont'd)

8.2.1.A General Description (Cont'd)

8.2.1.A(2) Bill Processing Service

(2) A billing service for end user accounts without a WATS access line or WATS-type service access line where billing data is accumulated per account as incurred at the rate set forth in 8.2.1.G.7 following as appropriate for Bulk-billed Processing. Individual IC messages are not listed on the bill rendered to the end user.

(3) A billing service for end user accounts without a WATS access line or WATS-type service access line where billing data is accumulated per account at the billing date at the rate as set forth in 8.2.1.G.7. following as appropriate for Message Billed Processing for accounts with over 600 messages per month. Individual IC messages are not listed on the bill rendered to the end user.

(d) Account establishment is the preparation of an IC end user record so that a bill can be sent to that end user.

(e) Posting of rated messages is the processing for billing of rated messages. Posting also is the examination and identification of all the rateable elements specified by the IC to be billed to an end user. Application of appropriate IC rates and charges to all such rate elements is also included when requested by the IC. The rating may be performed by the Company, another entity or the IC. Editing and rating of rate elements is performed when IC services are established or changed. Rating is always performed and editing may be performed coincident with the implementation of a change in the IC's schedule of rates.

ACCESS SERVICE

8. BILLING AND COLLECTION SERVICES (Cont'd)

8.2 Billing Service

8.2.1 Message Billing Service (Cont'd)

8.2.1.A General Description (Cont'd)

8.2.1.A(2) Bill Processing Service (Cont'd)

(f) Rendering of bills is the preparation and mailing of statements of the deposits and amounts due from the end user for IC message-billed and bulk-billed services. These statements may, at Company choice, be included with the regular monthly bill for local Exchange Service mailed to the end user.

(g) Receiving payment and maintenance of accounts is the collecting of monies from end users for services furnished by the IC and maintenance of records of all transactions.

(h) Treatment of accounts is the forwarding of notices of delinquent or unpaid end user accounts, posting of credits and adjustments, and when necessary as determined by the Company, denial of the IC's services and/or local Exchange Services to an end user. Where local Exchange Service access is denied, access to the IC service will also be denied.

(i) Message investigation is that activity undertaken by the Company to secure, or attempt to secure, proper billing information for IC messages.

(j) Inquiry is the answering of end user questions about charges billed for IC services and application of credits and adjustments to end user accounts and review of IC messages removed from an end user's bill.

(k) Marketing Messages are IC provided information that is printed on the IC's end user's bill.

ACCESS SERVICE

8. BILLING AND COLLECTION SERVICES (Cont'd)

8.2 Billing Service

8.2.1 Message Billing Service (Cont'd)

8.2.1.A General Description (Cont'd)

8.2.1.A(2) Bill Processing Service (Cont'd)

(l) Expanded inquiry is the answering of end user questions about charges billed for IC services which are above and beyond the scope of standard IC message inquiries. This would also include the application of credits and adjustments to end user accounts. Following are some of the IC services which would be included in expanded inquiry: IC promotions, volume discounts, rate calculations and verifications, 900 service and 800 service. This list of services is not all inclusive. Other IC services could be included based upon an IC's inquiry requirements.

8.2.1.B Undertaking of the Company

8.2.1.B.(1) Message Processing Service

(a) When Message Processing is ordered by an IC, the Company will process all of the IC messages it possesses in South Carolina as set forth following.

(b) The Company will provide Message Processing Service only for IC messages originating or recorded within the operating territory of the Company. The IC messages which the Company will process may be IC Messages from Recording Service as set forth in 8.1 preceding or, at the direction of the IC, other IC messages which are chargeable in accordance with the rate schedule furnished by the IC. Any sent-paid coin IC messages provided as input by the IC will be processed unless the IC specifies in writing that such IC messages are not to be processed. When such IC messages are processed, Message Processing charges will apply. When such messages are not processed, they may not be included in any IC message detail provided to the IC.

ACCESS SERVICE

8. BILLING AND COLLECTION SERVICES (Cont'd)

8.2 Billing Service (Cont'd)

8.2.1 Message Billing Service (Cont'd)

8.2.1.B Undertaking of the Company (Cont'd)

8.2.1.B.(1) Message Processing Service (Cont'd)

(c) A record of IC call details is required to provide Message Processing Service. Where an IC subscribes to Recording Service as set forth in 8.1 preceding, those recorded details may be used as the input. Where the IC provides the call details, the records must be in the standard format established by the Company and delivered to the location specified by the Company. The charges as set forth in Section 12. following will apply if the IC data-transmits its call details to the Company. If the IC provided records must be converted by the Company to the standard format, and the Company agrees to make the conversion, program development charges as set forth in Section 12. following apply for the hours required to design, develop, test, and maintain the necessary programs. The assembling and editing charge, as set forth in 8.1.7 preceding, applies in addition to all other charges for all such details converted by the Company. The Company will provide to the IC the precise details of the required standard format. If, in the course of Company business, it is necessary to change the standard format, the Company will provide notification to the involved ICs six months prior to the change. If the IC requests the IC provided call details be reprocessed by the Company because of an IC error, the Company will reprocess the IC provided call details, and the appropriate charges as set forth in Section 12. following will apply.

ACCESS SERVICE

8. BILLING AND COLLECTION SERVICES (Cont'd)

8.2 Billing Service (Cont'd)

8.2.1 Message Billing Service (Cont'd)

8.2.1.B Undertaking of the Company Cont'd)

8.2.1.B.(1) Message Processing Service (Cont'd)

(d) The Company will develop the IC's schedule of rates into a rating program. Program development charges, as set forth in Section 12. following, apply for the hours required to design, develop, test, and maintain the necessary programs.

(e) Upon acceptance by the Company of a Special Order for Message Processing Service from an IC, the Company will determine the period of time to implement such service on an individual order basis.

(f) Changes in the rate levels of IC charges to be billed will normally be implemented within 30 days after receipt of a Special Order from the IC requesting such changes. Such changes will require modifications of the rating program. Program development charges, as set forth in Section 12. following, apply for the hours required to design, develop, test, and maintain the necessary program changes. If any IC message detail must be reprocessed in order to apply the rate changes, the appropriate message processing charges as set forth in Section 12. following apply for all IC messages reprocessed.

ACCESS SERVICE

8. BILLING AND COLLECTION SERVICES (Cont'd)

8.2 Billing Service

8.2.1 Message Billing Service (Cont'd)

8.2.1.B Undertaking of the Company Cont'd)

8.2.1.B.(1) Message Processing Service (Cont'd)

(g) Changes in the rate structure for IC services to be billed also require a change in the rating program. When the Company determines that it can accommodate the changes, the conditions and the period of time required to make such changes will be determined on an individual order basis. Program development charges as set forth in Section 12. following apply for the hours required to design, develop, test, and maintain the necessary program changes. If any IC message detail must be reprocessed in order to apply the rate structure changes, the appropriate message processing charges as set forth in Section 12. following apply for all IC messages reprocessed.

(h) Where the Company has rated IC messages which are to be billed to an end user by another Exchange Telephone Company, the Company will enter the IC messages on a magnetic tape or data file which can be used for data transmission of the details. When the IC has so arranged with an involved Exchange Telephone Company, the Company will transmit the rated IC message details to such other Exchange Telephone Company for billing to end users in its operating territories. When the IC does not have billing arrangements with an Exchange Telephone Company, rated messages for such an Exchange Telephone Company will be delivered to the IC. The charges as set forth in Section 12. following apply to rated IC messages that are data-transmitted to the other Exchange Telephone

ACCESS SERVICE

8. BILLING AND COLLECTION SERVICES (Cont'd)

8.2 Billing Service

8.2.1 Message Billing Service (Cont'd)

8.2.1.B Undertaking of the Company (Cont'd)

8.2.1.B.(1) Message Processing Service (Cont'd)

(h) (Cont'd)

Companies. The charges as set forth in Section 12. following apply to rated IC messages that are delivered to the IC. When the IC message details are data-transmitted to the IC location, the data transmission charges will be determined on an individual case basis. Program development charges as set forth in Section 12. following apply for the hours required to design, develop, test and maintain the necessary programs.

(i) Where the rates for IC services have been implemented under an accounting order pending final approval from a regulatory agency, the Company will upon written request from the IC, keep such records as may be required to make any adjustments to the end users as may be ordered by the regulatory agency. The charges for such a service will be determined on an individual case basis.

(j) The Company will, upon request, provide the IC the rated IC message detail. The rated IC message detail will be provided on a request by request basis in a format similar to that used by the Company as input to Bill Processing Service. All rated IC message detail available to the Company will be provided to the IC. The rated IC message detail will not be sorted to furnish detail by specific end users, groups of end users, by office or by location.

ACCESS SERVICE

8. BILLING AND COLLECTION SERVICES (Cont'd)

8.2 Billing Service (Cont'd)

8.2.1 Message Billing Service (Cont'd)

8.2.1.B Undertaking of the Company (Cont'd)

8.2.1.B.(1) Message Processing Service (Cont'd)

(j) Cont'd)

The Company will provide the IC detail on a magnetic tape. The magnetic tapes will be provided without the return of previously supplied tapes. The Company will supply the magnetic tapes. Program development charges, as set forth in Section 12. following, apply for the hours required to design, develop, test and maintain the necessary programs. When a magnetic tape is provided, the charges as set forth in Section 12. following also apply.

Unless specified otherwise by the IC, the magnetic tapes will be sent to the IC using first class U.S. Mail service. However, the IC may pick up the magnetic tapes at a location designated by the Company or request the information on the magnetic tapes be data-transmitted to the IC. When the information is data-transmitted to an IC location, the data transmission charges will be determined on an individual case basis.

(k) If the IC makes a request within 30 days of the date the IC details were initially made available to the IC, the Company will make every reasonable effort to recover the IC detail and make it available again to the IC. The charges as set forth in Section 12. will apply for all such IC detail provided. When the IC details are data-transmitted to an IC location, the data transmission charges will be determined on an individual case basis.

ACCESS SERVICE

8. BILLING AND COLLECTION SERVICES (Cont'd)

8.2 Billing Service

8.2.1 Message Billing Service (Cont'd)

8.2.1.B Undertaking of the Company Cont'd)

8.2.1.B.(1) Message Processing Service (Cont'd)

(l) IC messages which the Company processes that cannot be rated in accordance with the IC rate schedule will be reviewed by Company message investigation groups. Upon completion of the review, rated IC messages will be delivered to the IC when the IC orders such service or to Bill Processing Service when the IC orders such service. Unrated messages will be handled in accordance with instructions that have been mutually determined by the Company and the IC. At the request of the IC, the unrated IC messages will be reviewed for unauthorized use of the IC service by Company message investigation groups for a period of up to 90 days after the IC message was processed. The appropriate charges, as set forth in Section 12. following, will apply.

8.2.1.B.(2) Bill Processing Service

(a) When Bill Processing Service is ordered by an IC, the Company will establish and maintain end user accounts and prepare and render bills for all IC messages, bulk-billed messages and related rate elements it possesses for South Carolina as set forth in B. through s. following at the rates and charges as set forth in herein. The Company will not establish an end user account with any IC balance due. In addition, the Company will , in accordance with Company deposit regulations, determine and collect a deposit from the end user for the IC service. The Company will, when necessary in accordance with the Company deposit regulations, determine and collect the service deposit when an end user account is established or for established accounts when the first IC message is posted to the end user account. The Company

ACCESS SERVICE

8. BILLING AND COLLECTION SERVICES (Cont'd)

8.2 Billing Service

8.2.1 Message Billing Service (Cont'd)

8.2.1.B Undertaking of the Company (Cont'd)

8.2.1.B.(2) Bill Processing Service (Cont'd)

(a) (Cont'd)

will, when necessary in accordance with Company deposit regulations, maintain a service deposit balance for each end user account. Service deposits will not be maintained by individual IC accounts but will be maintained for the end user account in general. The Company will provide the IC a copy of its service deposit regulations upon request from the IC.

(b) The Company will provide Bill Processing Service for message-billed service, bulk-billed service and related rate elements which are posted to end user accounts located within the operating territory of the Company only. The Company will separate the rated IC messages into a message-billed group and a bulk-billed group for application of rates as set forth in Section 12 following.

(c) The Company will mark its records and files to show that an end user has been issued an IC credit card. When it becomes necessary as determined by the Company, to change the credit card number or discontinue the billing of credit card calls to an end user account because of nonpayment of charges or unauthorized use of Company and IC service offerings, the Company will provide the IC the credit card number, associated end user account name and billing address for the credit card number change or billing discontinued. All charges for calls associated with such a discontinued credit card after the IC has been notified will become the responsibility of the IC. End user questions concerning the issuing of IC credit cards will not be handled by the Company.

ACCESS SERVICE

8. BILLING AND COLLECTION SERVICES (Cont'd)

8.2 Billing Service (Cont'd)

8.2.1 Message Billing Service (Cont'd)

8.2.1.B Undertaking of the Company (Cont'd)

8.2.1.B.(2) Bill Processing Service (Cont'd)

(d) Rated IC messages are required to provide Bill Processing Service. If the IC subscribes to Message Processing Service as set forth herein the rated IC messages may be used as the input. If the IC provides the rated IC messages, those IC messages must be in the standard format established by the Company and delivered to the location specified by the Company. The charges as set forth in Section 12. following apply if the IC data-transmits its rated message data to the Company.

Such IC provided rated message data must identify the end user account to be billed. If the IC provided rated messages must be converted by the Company to the standard format, and the Company agrees to make the conversion, program development charges as set forth in Section 12. following apply for the hours required to design, develop, test and maintain the necessary programs. The assembling and editing charge, as set forth in 8.1.7 preceding, applies in addition to all other charges for all such rated IC messages converted by the Company. The Company will provide to the IC the precise details of the required format. If, in the course of Company business, it is necessary to change the format, the Company will notify the involved ICs six months prior to the change.

If the IC requests the IC provided rated IC messages be reprocessed by the Company because of an IC error, the Company will reprocess the IC provided rated IC messages and the appropriate charges as set forth in Section 12 following will apply.

ACCESS SERVICE

8. BILLING AND COLLECTION SERVICES (Cont'd)

8.2 Billing Service (Cont'd)

8.2.1 Message Billing Service (Cont'd)

8.2.1.B Undertaking of the Company (Cont'd)

8.2.1.B.(2) Bill Processing Service (Cont'd)

(e) For end user accounts in its operating territory, where the IC has ordered Bill Processing Service, the Company will bill the rated IC messages provided by the IC. The bill format will be determined by the Company.

(f) Upon acceptance by the Company of a Special Order for Bill Processing Service from an IC, the Company will determine the conditions and the period of time to implement such service on an individual order basis. Program development charges, as set forth in Section 12. following, apply for the hours required to design, develop, test and maintain the necessary programs including any programs to rate, change the rates of or change the rate structure of any rate elements associated with the IC services.

(g) The Company will provide Bill Processing Service only on the condition that it purchase the accounts receivable from the IC as set forth in 8.2.2 following.

(h) The Company will, at the option of the IC, provide Message-Billed Bill Processing Service with or without inquiry and Bulk-Billed Bill Processing Service with or without inquiry. The Company will not become involved in disputes between an IC and its end users. Consequently, utilizing Company guidelines previously established for the collection process for its own accounts, the Company may remove a disputed IC's charge from an end user's bill and deduct that amount from the IC's accounts receivable. It will be the IC's responsibility to pursue the collection of that amount.

ACCESS SERVICE

8. BILLING AND COLLECTION SERVICES (Cont'd)

8.2 Billing Service (Cont'd)

8.2.1 Message Billing Service (Cont'd)

8.2.1.B Undertaking of the Company (Cont'd)

8.2.1.B.(2) Bill Processing Service (Cont'd)

(h) (Cont'd)

When the Company provides inquiry or expanded inquiry, the Company will be responsible for contacts and arrangements with the IC's end users concerning the billing, collecting, crediting and adjusting of the IC service charges, except prior IC balances due from end users, in accordance with written instructions mutually agreed upon by the IC and the Company. At the request of the IC when the IC has ordered inquiry, the billed IC messages which are removed from an end user's bill in accordance with IC inquiry instructions, will be reviewed for unauthorized use of IC service by Company message investigation groups for a period of up to 90 days after the billed IC message has been removed from an end user's bill in accordance with IC inquiry instructions, the Company will make appropriate adjustments to the IC's accounts receivable.

When the Company provides Bill Processing Service without inquiry, all contacts from IC end users concerning the IC billed amounts will be referred to the IC, and the Company will only be responsible for contacts with IC's end users concerning the collection of IC service deposits and charges, except prior IC balances due from end users. The IC will notify the Company when there is a dispute with an end user's account. Pending resolution, or if resolution is not reached, the Company may remove an IC's disputed charge from an end user's bill and deduct that amount from the IC's accounts receivable. The IC will

ACCESS SERVICE

8. BILLING AND COLLECTION SERVICES (Cont'd)

8.2 Billing Service (Cont'd)

8.2.1 Message Billing Service (Cont'd)

8.2.1.B Undertaking of the Company (Cont'd)

8.2.1.B.(2) Bill Processing Service (Cont'd)

(h) (Cont'd)

indemnify and hold harmless the Company for damages arising in any manner in which the IC fails to properly notify the Company concerning the existence of a dispute. Inquiry will only be provided when the IC has ordered Bill Processing Service for the South Carolina operating area.

(i) When the Company does not provide inquiry but does provide Bill Processing Service, the Company will provide Investigation of Bill charges at the rate as set forth in Section 12 following. Investigation of Bill charges includes provision of information about the charges and deposits where IC information can be obtained (i.e., the Company will not have CNA information for called parties outside the state operating territory), whether the service is properly installed and operating, and the amount of unpaid and/or unbilled toll. It also includes processing the request for an additional copy of a bill and providing the address to which the bill was sent. It does not include the name and address of the called party (CNA) and/or a non-billed calling party. It also does not include activities or responses on charges removed from bills at the IC's request. Adjustments to an end user's account will be made at the IC's request and the charges as set forth in Section 12 following will apply.

ACCESS SERVICE

8. BILLING AND COLLECTION SERVICES (Cont'd)

8.2 Billing Service (Cont'd)

8.2.1 Message Billing Service (Cont'd)

8.2.1.B Undertaking of the Company (Cont'd)

8.2.1.B.(2) Bill Processing Service (Cont'd)

(j) When the Company provides Bill Processing Service and does not provide inquiry, the Company will at the option of the IC provide Message Investigation at the rate as set forth in Section 12 following. Message Investigation includes the review of billed customer's messages and is performed to identify suspected unauthorized use of IC service or to determine proper billing. IC messages removed from an end user's bill will be reviewed for a period of up to 90 days.

(k) The Company will accept IC gift certificates for payment from end users if the IC agrees in writing to redeem all such gift certificates. The format of the gift certificate must be acceptable to the Company.

(l) Rated IC messages input to Bill Processing Service which the Company cannot bill for any reason, will be reviewed by the Company's message investigation groups. Upon completion of the review, the billable messages will be posted and the appropriate charges as set forth in Section 12 following will apply. Unbillable messages will be handled in accordance with instructions that have been mutually determined by the Company and the IC. At the request of the IC, the rated IC messages which cannot be billed to an end user will be reviewed for unauthorized use of IC service by Company message investigation groups for a period of up to 90 days after the rated IC message was processed.

ACCESS SERVICE

8. BILLING AND COLLECTION SERVICES (Cont'd)

8.2 Billing Service (Cont'd)

8.2.1 Message Billing Service (Cont'd)

8.2.1.B Undertaking of the Company (Cont'd)

8.2.1.B.(2) Bill Processing Service (Cont'd)

(m) The Company will post rated IC messages to the appropriate end user account when it identifies an IC message to be billed to an end user. The Company will bill to an end user other IC message-billed service charges, such as blocking of third number billing, time and rate charges, and subscription charges when it receives an order for such services from an IC. Other IC message-related charges, such as directory assistance and 900 charges, will be billed to the end user based on IC message data received from Message Processing Service or from the IC. The Company will make adjustments to end user balances due, to account for application of credits authorized by IC inquiry instructions and IC furnished statements.

(n) The Company will establish an end user account for IC bulk-billed service when it receives an order from an IC to perform such activity for a specific end user and will bill IC bulk-billed charges to the end user. The Company will bill other IC bulk-billed rate elements, such as provision of a bulk-billed service access line, installation of an access line and provision of an access line extension, when it receives a Special Order for such services from an IC. Other IC message-related charges for bulk-billed service, such as directory assistance and 900 charges, will be billed to the end user based on IC message data received from Message Processing Service or from the IC. The Company will make adjustments to end user balances due, to account for application of credits authorized by IC inquiry instructions and IC furnished statements.

ACCESS SERVICE

8. BILLING AND COLLECTION SERVICES (Cont'd)

8.2 Billing Service (Cont'd)

8.2.1 Message Billing Service (Cont'd)

8.2.1.B Undertaking of the Company (Cont'd)

8.2.1.B.(2) Bill Processing Service (Cont'd)

(o) Where the rates for IC services have been implemented under an accounting order pending final approval from a regulatory agency, the Company will, upon written request from the IC, keep such records as may be required to make any adjustments to the end users as may be ordered by the regulatory agency. The charges for such a service will be determined on an individual case basis. The final disposition of an accounting order shall be provided at rates determined on an individual case basis.

(p) At the IC's request and when the IC has ordered Bill Processing Service, the Company will print an IC provided Marketing Message in the available space on an end user's bill. The Company shall not be required to print for the IC any Marketing Message which in any manner, either directly or indirectly, by name or otherwise, refers to the Company. The Company shall not be required to print any Marketing Message which, in its opinion, would be confusing to its end users or would result in liability of any kind to any person or entity for the Company. The Company liability for Marketing Messages is as set forth in 8.2.1.C.5. Specifications for the Marketing Message will be provided to the IC by the Company. The Company shall have the right to review and approve Marketing Messages prior to enclosing.

(q) When a clearinghouse agent acts as the agent for certified ICs with respect to the provision of billing and collection for telecommunication services, the name of the certified IC which transported the call (as provided to the Company by the clearinghouse agent) must appear on the end user's bill, in addition to that of the clearinghouse agent.

ACCESS SERVICE

8. BILLING AND COLLECTION SERVICES (Cont'd)

8.2 Billing Service (Cont'd)

8.2.1 Message Billing Service (Cont'd)

8.2.1.B Undertaking of the Company (Cont'd)

8.2.1.B.(3) Message Billing Service Ordering

(a) The Company will provide Message Billing Services under a Special Order. For all Message Billing Service, other than establishment of or changes to end user account data, establishment of or changes to end user account rate elements and changes to end user balances due, the Message Billing Service Special Order charge will be determined on an individual case basis. The format of this Special Order will be specified by the Company.

(b) The Company will arrange with the IC to accept under a Special Order end user account information to establish and change end user account data, establish and change end user account rate elements and change end user balances due. The methods, procedures and manner in which the end user account data and changes are forwarded to the Company must be agreeable to the Company. The charges to handle such Special Orders will be determined on an individual case basis.

8.2.1.C Liability of the Company

Not withstanding 2.1.4 preceding, the Company liability for Message Billing Service is as follows:

8.2.1.C.(1) If Bill Processing Service detail is not available because the Company lost or damaged records or incurred processing system outages, the Company will attempt to recover the lost IC detail. If the lost IC detail cannot be recovered, and the Company recorded the details, the IC detail and the extent of the Company's liability for damages will be as set forth in 8.1.3.A. preceding. If the lost IC detail cannot be recovered and the IC provided the detail, the IC will be

ACCESS SERVICE

8. BILLING AND COLLECTION SERVICES (Cont'd)

8.2 Billing Service (Cont'd)

8.2.1 Message Billing Service (Cont'd)

8.2.1.C Liability of the Company

8.2.1.C.(1) (Cont'd)

requested to resupply the detail. If the IC cannot resupply the detail, the detail and the extent of the Company's liability for damages will be as set forth in 8.1.3.A. preceding. This recovered detail will be included in message detail provided to the IC when the IC orders such service and any recovered IC messages will be billed.

8.2.1.C.(2) When the Company is notified that due to its error or omission, incomplete IC detail has been provided as set forth in 8.2.1.B.1.j. preceding to an IC, the Company will make every reasonable effort to recover and provide the IC detail to the IC at no additional charge. Such request to recover the IC details must be made within 30 days from the date the IC detail was initially made available to the IC. If the detail cannot be recovered, the extent of the Company's liability for damages shall be limited as set forth in 8.1.3.A. preceding.

8.2.1.C.(3) If the Company finds an error or is notified of an error in billing to an end user, it will make a reasonable effort to correct the error and bill the appropriate end user accordingly within the limits permitted by the laws of South Carolina. If the error is caused by the Company and the Company cannot timely bill the proper end user, the extent of the Company's liability for damages will be the known amount misbilled or when the amount misbilled is unknown as set forth in 8.1.3.A. preceding. If the error is caused by information or direction provided by the IC, the IC will be liable for all appropriate charges for Message Billing Service as set forth in G. and any other cost and expenses incurred by the Company to correct the error.

ACCESS SERVICE

8. BILLING AND COLLECTION SERVICES (Cont'd)

8.2 Billing Service (Cont'd)

8.2.1 Message Billing Service (Cont'd)

8.2.1.C Liability of the Company

8.2.1.C.(4) In the absence of willful misconduct, no liability for damages to the IC, or other entity or person other than that as set forth in 1., 2., and 3. preceding shall attach to the Company for its action or the conduct of its employees in providing Message Billing Service.

8.2.1.C.(5) The Company's liability to the IC for any errors or omissions in printing or distributing Marketing Messages shall be limited either to reprinting and distributing at no additional charge to the IC a correct copy of the Marketing Message in the Company's next billing cycle, or to granting of a corresponding credit adjustment to the IC for amounts billed for the affected Marketing Message.

ACCESS SERVICE

8. BILLING AND COLLECTION SERVICES (Cont'd)

8.2 Billing Service (Cont'd)

8.2.1 Message Billing Service (Cont'd)

8.2.1.D Obligations of the IC

8.2.1.D.(1) The IC shall order Message Billing Services under a Special Order for the State of South Carolina where service is desired. The IC shall be responsible for all balances due from end users that exist prior to ordering Bill Processing Service.

8.2.1.D.(2) The IC shall not order Inquiry, Expanded Inquiry, Investigation of Bill Charges or Message Investigation unless it also has ordered Bill Processing service for the South Carolina operating area. The IC shall notify the Company in writing if any service is to be discontinued.

8.2.1.D.(3) The IC shall furnish all information necessary for the Company to provide the Message Billing Service, including any per month service charges applicable to an end user. When IC messages are to be billed by an entity other than the Company, the IC shall furnish written instructions as to how the rated IC messages are to be provided to that other entity. If the IC does not furnish complete instructions, all resulting unbillable messages will be delivered to the IC. The information shall be furnished by the IC in a timely manner.

The procedures utilized and the application of Federal, State or Local sales, use, excise, gross receipts or other taxes or tax-like fees to be imposed on an IC's charge applicable to its end user shall be performed by the Company if mutually agreed to by the Company and the IC. When the IC is required to provide the Company with notification of tax changes or new taxes applicable to service provided by the IC or with any direction, information, or advice concerning performance of any tax related service, the IC will indemnify the Company and hold it harmless from and against liability or loss of whatever kind which may result from the IC's failure to comply with such requirements.

ACCESS SERVICE

8. BILLING AND COLLECTION SERVICES (Cont'd)

8.2 Billing Service (Cont'd)

8.2.1 Message Billing Service (Cont'd)

8.2.1.D Obligations of the IC (Cont'd)

8.2.1.D.(3) (Cont'd)

The Company will indemnify the IC for tax assessments, penalties, and surcharges due to delay in implementing a tax change, loss of a tax exemption certificate or erroneous grant of exempt status when the IC has challenged exempt status which results from gross negligence or willful misconduct of the Company.

8.2.1.D.(4) The IC shall furnish, to the Company, a written schedule of its rates and charges in sufficient time to allow the Company to establish a rating program. The IC's rate structure must be consistent with established Company rating methodologies. The interval required to establish a rating program must be mutually agreeable to the Company and the IC.

8.2.1.D.(5) When the IC orders Bill Processing Service, it shall authorize the Company in writing to deny service to end users for nonpayment. If that authorization is not received, Bill Processing Service will not be provided.

8.2.1.D.(6) The IC shall be responsible for all its end user contacts and arrangements, including prior IC balances due from end users, concerning the provision and maintenance of the IC's service.

8.2.1.D.(7) When the IC orders message-billed or bulk-billed Bill Processing Service with inquiry, the IC shall furnish to the Company written instructions, which are agreeable to the Company, for the handling of IC end user questions about bills. When the IC orders message-billed or bulk-billed Bill Processing Service without inquiry, the IC shall furnish the Company with written instructions as to where inquiries are to be referred. When the IC does not order inquiry service and desires credit adjustments be made to the end user balance due, the IC shall furnish a statement for each end user account where the credit is desired. These statements

ACCESS SERVICE

8. BILLING AND COLLECTION SERVICES (Cont'd)

8.2 Billing Service (Cont'd)

8.2.1 Message Billing Service (Cont'd)

8.2.1.D Obligations of the IC (Cont'd)

8.2.1.D.(7) (Cont'd)

shall show the IC message, the date the IC message was billed and the amount of the credit. These statements shall be furnished to the Company under a Special Order as set forth in 8.2.1.B.3 preceding. The IC shall notify its end users through its tariff or other appropriate means when the IC handles the bill inquiries. The IC shall furnish the Company all end user bill adjustment statements in writing.

8.2.1.D.(8) When a clearinghouse agent orders inquiry service, the clearinghouse agent must provide the Company with the telephone number of the IC so that the end user may directly contact the IC if that end user is not satisfied with the response of the Company, provided, however, that if the clearinghouse agent will provide the IC's number upon request of the end user, the inquiry will be routed by the Company to the clearinghouse agent for handling.

When the clearinghouse agent does not order inquiry service from the Company, the telephone number of the IC must be stated on the end user's bill to enable the end user to directly contact the IC, provided, however, that if the clearinghouse agent will provide the telephone number of the IC upon request of the end user, the telephone number of the clearinghouse agent may appear on the bill instead of that of the IC.

8.2.1.D.(9) The IC will immediately redeem all IC gift certificates the Company receives in payment for end user charges. The IC agrees to use a gift certificate format that is agreeable to the Company.

ACCESS SERVICE

8. BILLING AND COLLECTION SERVICES (Cont'd)

8.2 Billing Service (Cont'd)

8.2.1 Message Billing Service (Cont'd)

8.2.1.D Obligations of the IC (Cont'd)

8.2.1.D.(10) The IC agrees to permit the Company in accordance with Company regulations, to determine and collect IC service deposits from all end users of the IC's services for which the Company provides billing for the IC.The IC will notify its end users through its tariffs or other means that the Company will, when necessary in accordance with Company deposit regulations, determine and collect IC service deposits. The IC will also include in its tariff and service arrangements and obtain regulatory concurrence if required for the Company deposit regulations that the Company will use to determine and collect end user service deposits.

8.2.1.D.(11) A clearinghouse agent may act as a clearinghouse agent for certificated ICs with respect to the provision of billing and collection for telecommunications services provided the following conditions are complied with:

(a) Prior to the provision of intrastate billing and collection service by the Company to a clearinghouse agent, the clearinghouse agent must provide to the Company the name, address, telephone number, and contact person for each IC on whose behalf the clearinghouse agent is receiving billing and collection services.

(b) Prior to the provision of intrastate billing and collection service by the Company to a clearinghouse agent, the clearinghouse agent must provide to the Company a copy of the intrastate certification for each IC on whose behalf the clearinghouse agent is receiving billing and collection service.

(c) Prior to the provision of intrastate billing and collection services by the Company to a clearinghouse agent, the clearinghouse agent must provide to the Company a copy of its agency agreement with each IC on whose behalf the clearinghouse agent is receiving billing and collection services.

ACCESS SERVICE

8. BILLING AND COLLECTION SERVICES (Cont'd)

8.2 Billing Service (Cont'd)

8.2.1 Message Billing Service (Cont'd)

8.2.1.D Obligations of the IC (Cont'd)

8.2.1.D.(11) (Cont'd)

(d) Each message sent to the Company by the clearinghouse agent must be identified by the appropriate IC's Carrier Identification Code (CIC); additionally, the clearinghouse agent must supply its own identifying CIC.

(e) In the event that a clearinghouse agent ceases to provide intrastate billing and collection services to an IC, the clearinghouse agent must inform the Company immediately.

8.2.1.D.(12) When the IC furnishes recorded IC detail for Message Processing Service and/or rated IC message detail for Bill Processing Service, it shall be responsible to deliver the detail to the location specified by the Company and it shall retain a copy of the detail furnished for at least 90 days.

8.2.1.D.(13) It is the Company's practice to bill messages on a current basis. Therefore, the IC will not furnish any messages and/or charges for input to Message Processing Service and/or Bill Processing Service which are older than six months (i.e., date the call was placed or charge incurred by the end user).

8.2.1.D.(14) When the IC requests Marketing Messages, the IC shall be responsible for delivering the Marketing Message information in the form in which it will be printed to the location specified by the Company.

ACCESS SERVICE

8. BILLING AND COLLECTION SERVICES (Cont'd)

8.2 Billing Service (Cont'd)

8.2.1 Message Billing Service (Cont'd)

8.2.1.D Obligations of the IC (Cont'd)

8.2.1.D.(15) The IC shall furnish all information necessary for the Company to provide expanded inquiry. This would include a detailed product/service description, schedule of rates and charges, any per month service charges applicable to an end user, limitations and/or restrictions of the service and any additional information needed to adequately handle end user contacts. The IC and the Company will develop mutually agreeable written instructions for the handling of end user questions about bills and adjustment guidelines. The interval required to develop the written instructions before implementation of the service must be mutually agreeable to the Company and the IC.

8.2.1.E.(1) Audit Provision

Upon written notice by the IC to the Company, the IC shall have the right through its authorized representative to examine and audit, during normal business hours and at reasonable intervals determined by the Company, all such records and accounts as may under recognized accounting practices contain information bearing upon the amount payable to the IC. Adjustment shall be made by the proper party to compensate for any errors or omissions disclosed by such examination or audit. Neither such right to examine and audit nor the right to receive such adjustment shall be affected by any statement to the contrary, appearing on checks or otherwise, unless such statement expressly waiving such right appears in a letter signed by the authorized representative of the party having such right and delivered to the other party.

ACCESS SERVICE

8. BILLING AND COLLECTION SERVICES (Cont'd)

8.2 Billing Service (Cont'd)

8.2.1 Message Billing Service (Cont'd)

8.2.1.E Payment Arrangements and Audit Provision

8.2.1.E.(1) Audit Provision (Cont'd)

Any information received or reviewed by the IC or its authorized representative during the audit is to be considered confidential and not to be distributed, provided or disclosed in any form to anyone not involved in the audit, nor is such information to be used for any other purpose.

8.2.1.E.(2) Discontinuance of Service

If the service is discontinued prior to the end of the period ordered, the IC will be responsible for all non-recoverable cost and expenses incurred by the Company.

8.2.1.E.(3) Cancellation of a Special Order

An IC may cancel a Special Order for Message Billing Service on any date prior to the Service date. The cancellation date is the date the Company receives written or verbal notice from the IC that the Special Order is to be cancelled. The verbal notice must be followed by written confirmation within 10 days. The service date for Message Billing Service is the date the IC and the Company mutually agree the service is to start. When an IC cancels a Special Order for Message Billing Service after the order date, but prior to the start of service, a charge equal to the Special Order charges, program development costs and any nonrecoverable capital costs incurred by the Company will apply to the IC.

8.2.1.E.(4) Changes to Special Orders

When an IC requests changes to a pending Special Order for Message Billing Service, such changes will be undertaken if they can be accommodated by the Company. A charge equal to any costs incurred by the Company because of the change will apply.

ACCESS SERVICE

8. BILLING AND COLLECTION SERVICES (Cont'd)

8.2 Billing Service (Cont'd)

8.2.1 Message Billing Service (Cont'd)

8.2.1.E Payment Arrangements and Audit Provision (Cont'd)

8.2.1.E.(5) Nonrecoverable Costs and Expenses

When a clearinghouse agent acts as agent for certified ICs in the provision of billing and collection for telecommunication services, any nonrecoverable capital costs and expenses incurred by the Company will be provided under an Individual Case Basis arrangement.

8.2.1.F. Rate Regulations

8.2.1.F.(1) The Message-Billed Bill Processing per bill charge applies each month that one or more messages or related rate elements are billed to an end user. When both interstate and intrastate IC messages are billed by the Company to the end user on the same bill for the IC, the Message-Billed Bill Processing per bill charge times 0.5 applies each month. When more than one copy of the end user bill is provided to the end user, the Message-Billed Bill Processing per bill charge applies for each additional copy of the end user bill provided.

8.2.1.F.(2) A Bulk-Billed Bill Processing per bill charge applies each month that one or more bulk-billed charges are billed to an end user. When both interstate and intrastate IC messages are billed by the Company to the end user on the same bill for the IC, the Bulk-billed Bill Processing per bill charge times 0.5 applies each month. When more than one copy of the end user bill is provided to the end user, the Bulk-billed Bill Processing per bill charge applies for each additional copy of the end user bill provided.

8.2.1.F.(3) When message detail is data-transmitted to or received from an Exchange Telephone Company location by the Company, a charge as set forth in G. following, on a per record basis will apply. A record is a logical grouping of information as described in the program that processes the information and loads the magnetic tape or data file used to supply the message detail which is data-transmitted. The Company will determine this charge based on its count of the records transmitted.

ACCESS SERVICE

8. BILLING AND COLLECTION SERVICES (Cont'd)

8.2 Billing Service (Cont'd)

8.2.1 Message Billing Service (Cont'd)

8.2.1.F. Rate Regulations (Cont'd)

8.2.1.F.(4) When message detail is data-transmitted to or transferred from an IC location by the Company, a charge as set forth in Section 12 following, on a per record basis will apply. A record is a logical grouping of information as described in the program that processes the information and loads the magnetic tape or data file used to supply the message detail which is data-transmitted. The Company will determine this charge based on its count of the records transmitted to and/or transferred from an IC location.

8.2.1.F.(5) The Message Billing Service Special Order charge applies for each Special Order for Message Processing Service and/or Bill Processing Service, other than establishment of or changes to end user account data, (including credit card data), establishment of or changes to end user account rate elements and changes to end user balances due, accepted by the Company.

The End User account activity charges apply whenever an IC Special Order requests end user account data be established or changed, nonrecurring or recurring IC rate element be added or changed in an end user account and/or an end user balance due be changed.

An end user account is a record for message-billed service or a bulk-billed service which has a unique name and address and billing identification number, assigned by the Company, to which a bill is rendered. One of the End User Account Activity Special Order charges as defined in a. or b. following always applies and the end user account establishment and change charge, end user account rate element rate level change charge or the end user account rate element rate structure change charge may apply depending on the activity ordered by the IC as set forth in 8.2.1.F.(5)(c),(d) and (e) following.

ACCESS SERVICE

8. BILLING AND COLLECTION SERVICES (Cont'd)

8.2 Billing Service (Cont'd)

8.2.1 Message Billing Service (Cont'd)

8.2.1.F. Rate Regulations (Cont'd)

8.2.1.F.(5) (Cont'd)

(a) The end user account activity Special Order charge applies whenever the IC furnishes to the Company end user account information using standard procedures that establishes or changes the information or rates associated with an end user account, and for which a company residence or business service order is required. Whenever the IC furnishes the Company end user account information not using standard procedures, the charges will be determined on an individual case basis.

(b) The End User Account Balance Due Special Order Charge applies whenever the IC furnishes the Company information using standard procedures that is used by the Company to change an end user's balance due. Whenever the IC furnishes the Company information not using standard procedures that is used by the Company, the charge will be determined to change the balance due associated with an end user account on an individual case basis.

ACCESS SERVICE

8. BILLING AND COLLECTION SERVICES (Cont'd)

8.2 Billing Service (Cont'd)

8.2.1 Message Billing Service (Cont'd)

8.2.1.F. Rate Regulations (Cont'd)

8.2.1.F.(5) (Cont'd)

(c) The end user account establishment and change charge applies whenever IC furnished information is used by the Company to establish or change end user account data or rate elements, or balances due, except for information to change end user account rate element rate levels or rate structure. End user account rate element rate level and rate structure change charges are applied as set forth in d. and e. following. In addition, the end user account establishment and change charge does not apply when rated IC messages are posted to a message-billed account associated with an end user common line. The end user account establishment and change charge does apply when the Company, at the request of an IC, establishes or changes a message-billed account with a credit card but without an associated end user common line. The end user account establishment and change charge applies for each account established, rate element established, account changed, rate element changed and balance due changed.

(d) The end user account rate element rate level change charge applies whenever IC furnished information is used by the Company to change an end user account rate element rate level. The charge applies for each end user account rate element rate level changed.

(e) The end user account rate element rate structure change charge applies whenever IC furnished information is used by the Company to change an end user account rate element rate structure. The charges to make the end user account rate element rate structure changes will be determined on an individual case basis.

ACCESS SERVICE

8. BILLING AND COLLECTION SERVICES (Cont'd)

8.2 Billing Service (Cont'd)

8.2.1 Message Billing Service (Cont'd)

8.2.1.F. Rate Regulations (Cont'd)

8.2.1.F.(6) When message detail is entered on a data file or magnetic tape to be provided to an IC, the per tape charge applies for each data file or tape prepared and the per record charge applies for each record processed. A record is a logical grouping of information as described in the programs that process the information and load the magnetic tapes or data file. The Company will determine the charges based on the number of data files or tapes prepared and on its count of the records processed. The number of records processed will be determined using the number of records input to or the number of records output from the programs that process the information and load the magnetic tapes or data file, whichever number of records is higher.

8.2.1.F.(7) The rates as set forth in Section 12 following apply for Bill Processing Service for an IC message-billed service depending on the total (i.e., sum of interstate and intrastate IC messages) number of messages billed to an end user account per month. The rate groups are 1 to 10 messages per month, 11 to 100 messages per month, 101 to 600 messages per month and over 600 messages per month. The rate for the largest number of IC messages billed for the end user account in a month will be used to determine the Bill Processing Service charges for that end user account for the month. The Company will determine the charges based on its count of IC messages billed each bill day to an end user account.

8.2.1.F.(8) The basic per hour rate and the premium per hour rate for program development is for the use of one hour of one Company programmer's time.

8.2.1.F.(9) The Company will keep a count of the hours and fraction thereof used by the Company personnel to provide program development and will bill the IC in accordance with these records. The hours for each service ordered will be summed and then rounded to the nearest hour, except that when the total is less than one hour, one hour will be used to determine the charges.

ACCESS SERVICE

8. BILLING AND COLLECTION SERVICES (Cont'd)

8.2 Billing Service (Cont'd)

8.2.1 Message Billing Service (Cont'd)

8.2.1.F. Rate Regulations (Cont'd)

8.2.1.F.(10) The charges for Marketing Messages are as set forth in Section 12. following. Program and Development charges as set forth in Section 12 following apply for the hours required to design, develop, test and maintain for Marketing Messages. If the IC desires the Marketing Message to be printed on the bill of end users who have previously used the IC's services but have no current charges for that IC's services. The following conditions and charges will apply in addition to those as set forth in Section 12 following:

(a) The IC must subscribe to Billing Information Service, and

(b) The IC must order marking and maintenance of mark as set forth in 8.4.7.G.

(c) For such bills rendered the Bill Processing per bill rate applies as set forth in Section 12 following.

8.2.1.F.(11) The rates for Expanded Inquiry apply per message for the messages covered by the Expanded Inquiry purchase (i.e., if Expanded Inquiry is purchased for 900 Service only, the charge will apply per 900 message billed). This rate is always applied in addition to the basic Inquiry rate.

8.2.2 Purchase of Accounts Receivable

8.2.2.A The Company will purchase from the IC its accounts receivable that arise from bills rendered by the Company to that IC's end users as described in 1. through 3. following. When an IC does not subscribe to Message Processing Service but does subscribe to Bill Processing Service the Company may purchase accounts receivable for an IC who provides the Company with files of rated messages as described in 8.2.2.A.(5) and 8.2.2.A.(6) following.

ACCESS SERVICE

8. BILLING AND COLLECTION SERVICES (CONT'D)

8.2 Billing Service (Cont'd)

8.2.2 Purchase of Accounts Receivable (Cont'd)

8.2.2.A (Cont'd)

The purchase of accounts receivable will be limited to amounts due the IC when the Company provides Bill Processing Service for that IC. After an IC orders Bill Processing Service and the Company is purchasing the IC's accounts receivable, the IC is prohibited from assigning, transferring, selling, exchanging or giving these accounts receivable to any other entity or person. The IC will provide a written assurance to the Company as to such forbearance and any such assignment, transfer, sale, exchange or gift is null and void and will subject the IC to all liabilities, expenses, costs including attorney fees expended and incurred by the Company in pursuing exclusive ownership to the accounts receivable.

The Company's purchase of an IC's accounts receivable shall be with recourse adjustments as set forth in 8.2.2.A.(2) following to account for amounts due the IC that the Company is unable to collect from the end users which use the IC's services. The amounts due the IC for the purchase of its accounts receivable will be determined as follows:

8.2.2.A.(1) Total Current Amount Billed.

The Company for each end user bill day (i.e., the billing date on a bill for an end user of an IC's service) will determine from its records the total current amount lawfully billed to the IC's end users for IC services, including all taxes applicable to such services. A total current amount billed will be determined for each IC for each end user bill day.

8.2.2.A.(2) Recourse Adjustments.

For each bill day, the Company will make recourse adjustments to the total current amount billed as follows:

ACCESS SERVICE

8. BILLING AND COLLECTION SERVICES (Cont'd)

8.2 Billing Service (Cont'd)

8.2.2 Purchase of Accounts Receivable (Cont'd)

8.2.2.A (Cont'd)

8.2.2.A.(2) Recourse Adjustments. (Cont'd)

(a) End User Adjustments

For each bill day, the Company will subtract from the total current amount billed the lawfully billed amounts which the Company removes from end users balances due in accordance with IC inquiry instructions. In addition, for each bill day, the Company will subtract from the total current amount billed an amount that equals the face value of any IC gift certificates (or its predecessor Company's gift certificates) the Company has in its possession. The IC gift certificates the Company possesses will be returned to the IC.

(b) Company and IC Adjustments

For each bill day, the Company will subtract from the total current amount billed bill amounts for end user bills which the Company delivers to the IC in accordance with 8.2.1.B.2.(i) preceding. In addition, for each bill day, the Company may make adjustments to the total current amount billed to account for amounts on statements received from the IC for additions or subtractions to an end user balance due for services billed in prior periods. Also, each bill day, the Company may make adjustments to the total current amount billed to account for additions and subtractions for IC or Company prior billing period errors.

ACCESS SERVICE

8. BILLING AND COLLECTION SERVICES (Cont'd)

8.2 Billing Service (Cont'd)

8.2.2 Purchase of Accounts Receivable (Cont'd)

8.2.2.A (Cont'd)

8.2.2.A.(2) Recourse Adjustments. (Cont'd)

(c) Uncollectible Adjustments

For each settlement period, the Company will subtract the amount of realized uncollectibles. This realized uncollectible amount is the IC amount billed by the Company to end users on final bills that are unpaid. The Company will determine the IC amount for realized uncollectibles for each purchase.

(1) Upon establishment of Bill Processing Service, the Company will withhold the percentage set forth in the operating contract of this Agreement of the customer's Purchase of Accounts Receivable (PAR) net settlement each month for the first nine (9) months of live End User billing as a Bad Debt Allowance Reserve. If one customer receives transfer of the interest of an established customer with verifiable credit, and/or the new customer has a proven history of prompt payment, the Company may, in its sole waive the Bad Debt Allowance Reserve.

For renewed Agreements, or at any time during the life of this Agreement for Bill Processing Service, the Company may withhold a percentage of the customer's Purchase of Accounts Receivable (PAR) net settlement. This percentage and the number of months withheld will be developed on an individual case basis.

ACCESS SERVICE

8. BILLING AND COLLECTION SERVICES (Cont'd)

8.2 Billing Service (Cont'd)

8.2.2 Purchase of Accounts Receivable (Cont'd)

8.2.2.A (Cont'd)

8.2.2.A.(2) Recourse Adjustments. (Cont'd)

(c) Uncollectible Adjustments (Cont'd)

The sole purpose of this Bad Debt Allowance Reserve is to guarantee payment for any customer bad debt. It does not relieve the customer of complying with the Company's conditions regarding prompt payment of any oustanding amounts due. The customer's Bad Debt Allowance Reserve will be retained by the Company up to twelve (12) months after the termination of this Agreement to assure all outstanding bad debt amounts are paid.

ACCESS SERVICE

8. BILLING AND COLLECTION SERVICES (Cont'd)

8.2 Billing Service (Cont'd)

8.2.2 Purchase of Accounts Receivable (Cont'd)

8.2.2.A (Cont'd)

8.2.2.A.(3) Payments of Net Purchase Amount to the IC

(a) The Company will purchase accounts receivable from the IC on each end user bill day for an amount (purchase amount) which equals the total current amount billed as set forth in 8.2.2.A.(1). preceding after known adjustments as set forth in 8.2.2.A.(2) preceding have been made. On the date (payment date) determined by adding 31 days to the end user bill day or on the next bill date (i.e., same date in the following month as the bill date), whichever is the shortest interval, the Company will remit payment to the IC for the purchase amount received by the Company prior to the payment date. Payment will be made in immediately available funds. If such payment date would cause payment to be due on a Saturday, Sunday or Holiday (i.e., New Year's Day, Independence Day, Labor Day, Thanksgiving Day, Christmas Day, the Second Tuesday in November and a day when Washington's Birthday, Memorial Day or Columbus Day is legally observed), payment for the net purchase amount will be due to the IC as follows:

If such payment date falls on a Sunday or on a Holiday which is observed on a Monday, the payment date shall be the first non-Holiday day following such Sunday or Holiday. If such payment date falls on a Saturday or on a Holiday which is observed on Tuesday, Wednesday, Thursday or Friday, the payment date shall be the last non-Holiday day preceding such Saturday or Holiday.

ACCESS SERVICE

8. BILLING AND COLLECTION SERVICES (Cont'd)

8.2 Billing Service (Cont'd)

8.2.2 Purchase of Accounts Receivable (Cont'd)

8.2.2.A (Cont'd)

8.2.2.A.(3) Payments of Net Purchase Amount to the IC

(b) Further, if any portion of the net purchase amount is not received by the IC by the payment date as set forth in a. preceding, or if any portion of the net purchase amount is received by the IC in funds which are not immediately available to the IC, then a late payment penalty shall be due the IC. The late payment penalty shall be the portion of the net purchase amount not received by the payment date times a late factor. The late factor shall not exceed the rate of one and one half percent per month.

Any late payment penalty will be included with the next Company payment to the IC.

(c) Also, if any adjustment that reduces an end user balance due is received by the Company from the IC after the date the Company billed the charges to be adjusted to the end user plus 45 days (billed plus date), then a late payment penalty may be due the Company. The late payment penalty shall be the adjustment amount times a late factor. The late factor shall not exceed the rate of one and one half percent per month.

Any late payment penalty will be included with the adjustment made by the Company to the IC's total current amount billed.

ACCESS SERVICE

8. BILLING AND COLLECTION SERVICES (Cont'd)

8.2 Billing Service (Cont'd)

8.2.2 Purchase of Accounts Receivable (Cont'd)

8.2.2.A (Cont'd)

8.2.2.A.(4) Amounts Due the IC Providing Files of Rated Records

For ICs providing the Company with files of rated records, the amount due for the purchase of its accounts receivable will be determined at the option of the Company as described in 8.2.2.A.(1) through 8.2.2.A.(4) preceding or as follows:

(a) Total Amount of Billable Revenue

The Company will, upon receipt of files of rated records, determine from its records the total amount lawfully billable to the IC's end users for the IC or its predecessor IC's services. A total amount of billable revenue will be determined for each file receipt date. The bill date for this revenue will be extended by 15 calendar days to provide an "averaged" bill date. This extension will make allowances for the time period existing between the receipt of the file and the actual billing of the end users for charges appearing on the file. This revenue, will serve as the base for that which is hereinafter referred to as the "file receipt" purchase of the accounts receivable.

ACCESS SERVICE

8. BILLING AND COLLECTION SERVICES (Cont'd)

8.2 Billing Service (Cont'd)

8.2.2 Purchase of Accounts Receivable (Cont'd)

8.2.2.A (Cont'd)

8.2.2.A.(4) Amounts Due the IC Providing Files of Rated Records (Cont'd)

(b) Recourse Adjustment

For each Settlement period, the Company will determine the taxes and adjustments associated with the total current amount billed.

This Settlement period activity will serve as the base for what is here and after referred to as the "billing" purchase of accounts receivable. The amounts due the IC for the settlement of the "billing" purchase of the accounts receivable will be determined as follows:

(1) Taxes

A total current amount for all directly billed taxes or any additional taxes applicable to such services will be determined for each IC for each settlement period.

(2) End User Adjustments

For each settlement period, the Company will determine lawfully billed amounts which the Company removes from end user's balances due in accordance with Company inquiry operations and/or with IC inquiry instructions to correct charges.

ACCESS SERVICE

8. BILLING AND COLLECTION SERVICES (Cont'd)

8.2 Billing Service (Cont'd)

8.2.2 Purchase of Accounts Receivable (Cont'd)

8.2.2.A (Cont'd)

8.2.2.A.(4) Amounts Due the IC Providing Files of Rated Records (Cont'd)

(b) Recourse Adjustment (Cont'd)

(3) Company and IC Adjustments

For each settlement period, the Company will subtract bill amounts which the Company has requested recourse from the IC in conjunction with end user disputes related specifically to the IC's services, charges, taxes, or prior recourse adjustments. In addition, for each settlement period, the Company may make adjustments to the total current amount billed to account for amounts on statements received from the IC for additions or subtractions to an end user balance due for the IC's services billed in prior periods where the IC performs inquiry. Also, each settlement period, the Company may make adjustments to the total current amount billed to account for additions and subtractions for IC or Company prior period errors.

(4) Uncollectible Adjustments

For each settlement period, the Company will subtract the amount of realized uncollectibles. This realized uncollectible amount is the IC amount billed by the Company to end users on final bills that are unpaid. The Company will determine the IC amount for realized uncollectibles for each purchase.

ACCESS SERVICE

8. BILLING AND COLLECTION SERVICES (Cont'd)

8.2 Billing Service (Cont'd)

8.2.2 Purchase of Accounts Receivable (Cont'd)

8.2.2.A (Cont'd)

8.2.2.A.(5) Settlement for Amounts Due to the IC Who Provides Files of Rated Records

The Company may purchase accounts receivable for an IC who provides the Company with files of rated records. Settlements will occur once a month as set forth in 8.2.2.A.(5)(a) following.

(a) Determination of Settlement Date

The settlement date for the aggregated purchase will be determined by adding the number of days determined to be the average IC payment availability period to the averaged bill day of the "file receipt" purchase. Except as provided herein, the Company will remit settlement to the IC on said settlement dates. Settlement will be made by electronic funds transfer or other means of transferring funds or by check or draft postmarked two days prior to the payment date for amounts not to exceed $100,000.

If such settlement date would cause settlement to be due on a Saturday, Sunday, or holiday observed by the IC or the Company, or on any other day when the Company is prohibited by local bank or Federal Reserve Bank closing from making payment by electronic funds transfer, settlement for the net settlement amount will be due to the IC as follows:

ACCESS SERVICE

8. BILLING AND COLLECTION SERVICES (Cont'd)

8.2 Billing Service (Cont'd)

8.2.2 Purchase of Accounts Receivable (Cont'd)

8.2.2.A (Cont'd)

8.2.2.A.(5) Settlement for Amounts Due to the IC Who Provides Files of Rated Records (Cont'd)

(a) Determination of Settlement Date (Cont'd)

If such settlement date falls on a Sunday or a Monday on which payment cannot be made (as described preceding), the settlement date shall be the first workday following the Sunday or Monday. If such settlement date falls on a Saturday or on a Tuesday, Wednesday, Thursday or Friday, on which payment cannot be made (as described preceding), the settlement date shall be the last workday preceding such Saturday, Tuesday, Wednesday, Thursday, or Friday.

(b) Late Payment Charges Further, if any portion of the net settlement amount is received by the IC after the settlement date as set forth herein, then a late payment penalty shall be due the IC. The IC will have the responsibility of billing the Company for any applicable late payment charge.

The Company will remit the agreed upon late payment charge within 30 days of the receipt of the invoice. The late payment penalty shall be the portion of the net purchase amount not received by the payment date times a late factor. The late factor shall not exceed the rate of one and one half percent per month.

ACCESS SERVICE

8. BILLING AND COLLECTION SERVICES (Cont'd)

8.2 Billing Service (Cont'd)

8.2.2 Purchase of Accounts Receivable (Cont'd)

8.2.2.A (Cont'd)

8.2.2.A.(5) Settlement for Amounts Due to the IC Who Provides Files of Rated Records (Cont'd)

(c) Penalties Applicable to End User Balance Adjustments

Also, if any adjustment to an end user balance due is received by the Company from the IC forty-five days after the date the Company billed the charges to be adjusted to the end user (billed plus date), then a late payment penalty shall be due the Company. The late payment penalty shall be the adjustment amount times the late factor. The late factor shall not exceed the rate of one and one half percent per month.

8.2.2.A.(6) Tax Liability

Should any federal, state or local jurisdiction determine that sales, use, gross receipts or any other taxes (including interest, penalties and surcharges thereon) are due by the Company as a result of the Company's purchase of accounts receivable, the Company will advise the IC and the IC shall be liable for any such tax, interest, penalties and surcharge, and the IC shall immediately reimburse the Company the amount of such tax, interest, penalties and surcharge paid by the Company. If the IC disagrees with the Company's determination that any taxes are due by the Company or disagrees with an assessment of any tax, penalty, surcharge and interest due by the Company as a result of the Company's purchase of accounts receivable, the IC shall, at its option and expense (including immediate payment of any such assessment), have the right to seek a ruling as to the inapplicability of any such tax or to protest any assessment and participate in any legal challenge to such assessment, but shall be liable for any tax, penalty, surcharge and interest ultimately determined to be due.

ACCESS SERVICE

8. BILLING AND COLLECTION SERVICES (Cont'd)

8.2 Billing Service (Cont'd)

8.2.2 Purchase of Accounts Receivable (Cont'd)

8.2.2.B Upon request from the IC, the Company will provide a copy of its methods and procedures used to determine the amounts named in this section (i.e., 8.2.2 Purchase of Accounts Receivable) to the authorized representative of the IC who is responsible for auditing these amounts.

8.3 Billing Information Service

8.3.1 General Description

8.3.1.A At the request of the IC, the Company will provide information to the IC from its end user records, billing files and account data base.

8.3.1.B Billing Information Service is the provision of information to the IC from Company record systems labeled as Customer Records Information System (CRIS), Non-Sent-Paid Indicator Data Base (DBAS) and Customer Name and Address Bureau (CNA). Such Billing Information Service will be limited to the provision of information to an IC relating exclusively to end user services provided by that IC. Information relating to services provided by any other entity will not be provided.

8.3.1.C Information is defined as any entry in the records, data base or bureau listings which is not listed as confidential and proprietary to the Company. Any entry listed as confidential and proprietary to the Company will not be provided.

8.3.2 Undertaking of the Company

8.3.2.A When Billing Information Service is ordered by the IC, the Company will provide information on a request by request basis as follows in 8.3.2.B through 8.3.2.L following at the rates and charges as set forth in 8.3.7 following.

ACCESS SERVICE

8. BILLING AND COLLECTION SERVICES (Cont'd)

8.3 Billing Information Service (Cont'd)

8.3.2 Undertaking of the Company (Cont'd)

8.3.2.B Upon request from an IC and when the IC has ordered Message Billing Service Bill Processing Service, the Company will provide information from its CRIS records as follows:

8.3.2.B.(1) Message detail for a message end user

Message detail is message-billed records in exchange message record (EMR) format in the CRIS file.

8.3.2.B.(2) Account detail for a message end user

Account detail is data that furnishes the end user name, billing address and billing parameters other than message detail and/or service and equipment detail.

8.3.2.B.(3) Service and equipment detail for a message end user. Service and equipment detail is data associated with the IC's rate elements. A message end user is an account with IC message or bulk-billed detail (for a bill period) or an account which is marked, as set forth in 8.3.2.E following, or established as an end user of the IC's bulk-billed services.

Message detail, account detail and/or service and equipment detail which is confidential due to legal, national security, end user or other appropriate requirements will not be provided. If the IC requires this information in order to bill its services, it shall secure written permission from the end user to obtain the information from the Company. The IC shall furnish the Company the end user's written permission for the information to be released.

8.3.2.C Upon request from an authorized supervisor of the IC for end user information when automatic number identification (ANI) service is provided to the IC by the Company or when the IC offers a telecommunications service for which the billing is based on authorized calling or called parties, the Company will provide information from its DBAS records. Only current information which resides in the data base will be provided.

ACCESS SERVICE

8. BILLING AND COLLECTION SERVICES (Cont'd)

8.3 Billing Information Service (Cont'd)

8.3.2 Undertaking of the Company (Cont'd)

8.3.2.D Where Company facilities are available and subject to the agreement of the Company, CRIS and/or DBAS information may be provided on an interrogation basis at the request of the IC. The interrogation basis will permit the IC to access a data file which contains the data base information from a data processing terminal at the IC location, furnish an end user telephone number and, after verification that the information is authorized for the IC's use, receive the end user information. The interrogation file will be provided during normal Company business hours. The DBAS interrogation file will be updated each business day to reflect current end user information. The CRIS interrogation file will be updated each bill day (day bills are prepared and dated for an end user for an IC's service) and will be updated daily when information is available and when the Company updates the file on a daily basis to reflect current end user information. The Company will develop the IC's CRIS and DBAS information order into a retrieval and interrogation program. Program development charges, as set forth in 8.3.7 following, apply for the hours required to design, develop, test and maintain the necessary programs.

ACCESS SERVICE

8. BILLING AND COLLECTION SERVICES (Cont'd)

8.3 Billing Information Service (Cont'd)

8.3.2 Undertaking of the Company (Cont'd)

8.3.2.E CRIS and/or DBAS information will be provided on a total file and/or file update basis as follows:

8.3.2.E.(1) The total file basis will permit the IC to receive, at the IC's option, all the end user information that is authorized for the IC's use on paper printout, magnetic tape or fiche. The total file output will contain end user information for the current billing period. The billing period will be set by the Company. The magnetic tapes will be provided without the return of previously supplied tapes. The Company will supply the magnetic tapes. After the information system ordered by the IC is in service, the paper printout, magnetic tape or fiche will be available from the Company within 10 working days of the IC request. Program development charges as set forth in 8.3.7 following, apply for the hours required to design, develop, test and maintain the necessary programs that are used to provide the paper output, magnetic tape or fiche. Once available, the paper printout, magnetic tape or fiche will be sent to the IC via first class U.S. Mail service. At the option of the IC, the IC may pick up the paper printout, magnetic tape or fiche at a location designated by the Company or request the information be data-transmitted to the IC. When the information is data-transmitted to the IC, the data transmission charges will be determined on an individual case basis.

ACCESS SERVICE

8. BILLING AND COLLECTION SERVICES (Cont'd)

8.3 Billing Information Service (Cont'd)

8.3.2 Undertaking of the Company (Cont'd)

8.3.2.E (Cont'd)

8.3.2.E.(2) The file update basis will permit the IC to receive, at the IC option, all the end user information that is authorized for the IC's use on paper printout, fiche or magnetic tape. The file update output will contain end user information for the current billing period only. The current billing period is the period associated with the most recent bill rendered to an end user. The magnetic tapes will be provided without the return of previously supplied tapes. The Company will supply magnetic tapes. The file updates will include those records added and those deleted, if any (deleted records may not be retained by the Company). For CRIS information, the file updates will be provided on a monthly interval. For DBAS information, the file updates will be provided for each business day. Program development charges as set forth in 8.3.7 following, apply for the hours required to design, develop, test and maintain the necessary programs that are used to provide the paper output, fiche or magnetic tape. Once available, the file update paper printout, fiche or magnetic tape will be sent to the IC via first class U.S. Mail service. At the option of the IC, the IC may pick up the paper output, fiche or magnetic tape at a location designated by the Company or request the information be data-transmitted to the IC. When the information is data-transmitted to the IC, the data transmission charges will be determined on an individual case basis.

ACCESS SERVICE

8. BILLING AND COLLECTION SERVICES (Cont'd)

8.3 Billing Information Service (Cont'd)

8.3.2 Undertaking of the Company (Cont'd)

8.3.2.E (Cont'd)

8.3.2.E.(3) The total file output and the file update output will, at the option of the IC, be provided on a quick turnaround basis. Such quick turnaround output will be provided one working day after the information that the IC ordered is available. Once available, the output will be provided on paper printout, fiche or magnetic tape and will be sent to the IC via first class U.S. Mail service. At the option of the IC, the IC may pick up the paper output, fiche or magnetic tape at a location designated by the Company or request the information be data-transmitted to the IC. When the information is data-transmitted to the IC, the data transmission charges will be determined on an individual case basis.

8.3.2.F The Company will, at the request of the IC, mark any message-billed message end user account as a user of the IC message services**.** After marking is ordered, the end user account will be marked as an IC end user account at the time the first message is posted to the end user account. If not marked at the request of the IC, such an end user account will not be identified as an IC account unless there are IC message details associated with the account for the bill period for which message detail is ordered by the IC. The mark will be removed at the request of the IC. Charges to mark the account and maintain the mark in future months as set forth in 8.3.7.G. following apply. IC bulk-billed end user accounts though not marked are counted as IC accounts.

8.3.2.G Upon acceptance by the Company of a Special Order for Billing Information Service from an IC, the Company will determine the period of time to implement such service on an individual order basis.

8.3.2.H The Company will provide the format for interrogation of its data files and the format of any printed, magnetic tape or fiche output from its CRIS and DBAS files.

ACCESS SERVICE

8. BILLING AND COLLECTION SERVICES (Cont'd)

8.3 Billing Information Service (Cont'd)

8.3.2 Undertaking of the Company (Cont'd)

8.3.2.I Upon request from an authorized supervisor of the IC who furnishes the account code assigned by the Company, the Company will provide name and town information from its CNA bureau. The CNA name and town data, but not street address, will be provided only when the IC needs the information to authorize a call, to bill a call, or to handle an emergency situation. The information will be provided on a request by request basis by voice telecommunications. Name, town and state will be provided for a telephone number. A request includes the handling of one call and providing the data for one telephone number. The Company will specify the location where requests are to be received and the format in which the request is to be made. If the name and address associated with the telephone number is restricted due to the request of the end user, legal authority or law enforcement agency, no name or town location will be provided. At the request of the IC, written confirmation of the name and town location will be sent to the authorized supervisor making the request by first class U.S. Mail service.

8.3.2.J If the IC requests the information ordered by the IC be resupplied by the Company because of incorrect IC specifications or errors, the Company will resupply the information in accordance with a new IC order and all appropriate charges as set forth in 8.3.7 following will apply.

8.3.2.K Where facilities are available and subject to the agreement of the Company, updating of IC data bases or files from Company data processing terminals or equipment in Company locations may be undertaken at the request of the IC. The charges for such a service will be determined on an individual case basis.

8.3.2.L The Company will provide Billing Information Service under a Special Order. For all Billing Information Services, the Billing Information Service Special Order charge as set forth in 8.3.7.I. following applies.

ACCESS SERVICE

8. BILLING AND COLLECTION SERVICES (Cont'd)

8.3 Billing Information Service (Cont'd)

8.3.3 Liability of the Company

Notwithstanding 2.1.3 preceding, in the absence of willful misconduct, no liability for damages to the IC or other person or entity shall attach to the Company for its action or the conduct of its employees in providing Billing Information Service.

8.3.4 Obligations of the IC

8.3.4.A The IC shall order Billing Information Service under a Special Order. The IC shall order those Billing Information Services for this state where it wishes to receive the services and shall specify how often it wishes the service to be provided.

8.3.4.B With each order, the IC shall identify the authorized individual and address to receive the Billing Information Service output. When interrogation is ordered, the IC shall identify the data processing terminals authorized to receive the information and the authorized individual who will be responsible for all terminal activities. When CNA service is ordered, the IC will identify in writing and include the account codes assigned by the Company of all authorized individuals who will contact the CNA bureau.

8.3.4.C Except for message detail, account detail, and/or service and equipment detail which is confidential due to legal, national security, end user, or other appropriate requirements, Billing Information outputs transferred to the IC from the Company may be used by the IC for any legitimate business purpose. The IC will indemnify and hold harmless the Company for damages arising in any manner in instances in which the IC fails to maintain confidentiality of any of the previously mentioned detail or information.

8.3.4.D The IC shall furnish, to the Company, when interrogation service is ordered all information necessary to allow the Company to establish an interrogation program. In addition, the IC shall furnish the Company, for each data base and file where the interrogation is ordered, an estimate of the number of requests per business day that the Company data bases and file will be asked to handle. The IC's terminals used to interrogate the Company data bases and files must be capable of working with Company equipment and software.

ACCESS SERVICE

8. BILLING AND COLLECTION SERVICES (Cont'd)

8.3 Billing Information Service (Cont'd)

8.3.4 Obligations of the IC (Cont'd)

8.3.4.E The IC shall be responsible for all contacts and inquiries from its end users concerning Billing Information Service.

8.3.4.F The IC shall not publicize or represent to others that the Company jointly participates with the IC in the development of the ICs end user records, accounts, data bases or market data, records, files and data bases or other systems it assembles through the use of Billing Information Service.

8.3.4.G When the IC orders marking of message-billed message end user accounts, all accounts containing that IC's messages will be marked starting with the next bill period and marking will continue until the IC orders marking discontinued. The IC shall, when it orders marking removed, furnish the telephone number of each end user account for which the mark is to be removed. The mark will be removed prior to the next bill period.

8.3.5 Payment Arrangements

8.3.5.A Cancellation of a Special Order

8.3.5.A.(1) An IC may cancel a Special Order for Billing Information Service on any date prior to the service date. The cancellation date is the date the Company receives written or verbal notice from the IC that the Special Order is to be cancelled. The verbal notice must be followed by written confirmation within 10 days. The service date for a Billing Information Service is the date the Company notifies the IC that the Company is ready to provide Billing Information Service reports or receive interrogation requests.

8.3.5.A.(2) When an IC cancels a Special Order for Billing Information Service after the order date but prior to the start of service, charges as listed following shall apply:

(a) For any service, the appropriate per hour rate for all hours expended by the Company to provide the service.

(b) For any service, any expense for equipment obtained for the service where such equipment cannot be reused within six months.

ACCESS SERVICE

8. BILLING AND COLLECTION SERVICES (Cont'd)

8.3 Billing Information Service (Cont'd)

8.3.5 Payment Arrangements (Cont'd)

8.3.5.B Changes to Special Orders

When an IC requests changes for a pending Special Order for Billing Information Service, they will be undertaken if they can be accommodated by the Company. Any additional time required on the part of Company personnel will be billed to the IC at the appropriate hourly charges.

8.3.6 Rate Regulations

8.3.6.A The number and type of records for which charges apply as set forth in 8.3.7 following will be accumulated by the Company and the Company will bill the IC in accordance with these accumulations. A record is a logical grouping of information as described in the programs that process the information, print the paper output, and load the magnetic tape or data file used to supply the detail which is data-transmitted or put on fiche. For each service and type of output ordered, the number of records processed by the Company to prepare the output will be used to determine the charges. The number of records processed will be determined using the number of records input to or the number of records output from the programs that process the information, print the paper output and load the magnetic tape or data file, whichever number of records is higher.

8.3.6.B The number of hours and fraction thereof for which charges apply as set forth in 8.3.7 following will be accumulated by the Company. The per hour rate is for the use of one hour of one Company programmer. The Company will bill the IC for hourly charges in accordance with these accumulations. The accumulated hours for each order will be summed and rounded to the nearest hour, except that when the total is less than one hour, one hour will be used to determine the charges.

8.3.6.C When a CNA request is received, the Company will keep a count of the requests. The Company will bill the IC in accordance with these records even though the Company was not able to provide a name and town location for all requests.

ACCESS SERVICE

8. BILLING AND COLLECTION SERVICES (Cont'd)

8.3 Billing Information Service (Cont'd)

8.3.6 Rate Regulations (Cont'd)

8.3.6.D When records are entered on a data file or magnetic tape in order to provide information to an IC, the per tape charge applies for each data file or tape ordered. In addition, the per record charge applies for each record entered on the data file or tape. The Company will determine the charges based on the number of data files or tapes prepared and on its count of the records entered on the data file or tape.

8.3.6.E When marking of message end user accounts is ordered, the marking charge applies for each end user account marked. Once an account is marked, the maintenance of mark charge applies for each month following the month the account is marked until the IC requests the mark be removed. No charges apply to remove the mark.

8.3.6.F The Provision of Billing Information Service per Special Order Charge applies for each Special Order accepted by the Company for any Billing Information Service.

8.3.6.G Customized reports will be provided to IC upon request and the rate will be calculated on an individual case basis.

ACCESS SERVICE

9. SPECIAL ACCESS SERVICE

9.1 General

Special Access Service provides a transmission path to connect customer designated premises*, directly, or through a Telephone Company hub or hubs where bridging or multiplexing functions are performed, or to connect a customer designated premises and a WATS Serving Office, or to connect a customer designated premises to a Public Packet Data Network Service. Special Access Service includes all exchange access not utilizing Telephone Company end office switches.

The connections provided by Special Access Service can be either analog or digital. Analog connections are differentiated by spectrum and bandwidth. Digital connections are differentiated by bit rate.

9.1.1 Channel Types

There are eight types of channels used to provide
Special Access Services. Each type has its own characteristics. All are subdivided by one or more of the following:

- Transmission specifications,
- Bandwidth,
- Speed (i.e., bit rate),
- Spectrum

Customers can order a basic channel and select from a list of those available transmission parameters and channel interfaces that they desire in order to meet specific communications requirements.

For purposes of ordering channels, each has been identified as a type of Special Access Service. However, such identification is not intended to limit a customer's use of the channel nor to imply that the channel is limited to a particular use. For example, if a customer's equipment is capable of transmitting voice over a channel that is identified as a Metallic Service in this tariff, there is no restriction against doing so.

* Telephone Company Centrex CO and CO-like switches and packet switches included in Public Packet Switching Network (PPSN) Service are considered to be a customer designated premises for purposes of this tariff.

ACCESS SERVICE

9. SPECIAL ACCESS SERVICE (Cont'd)

9.1 General (Cont'd)

9.1.1 Channel Types (Cont'd)

Following is a brief description of each type of channel:

Metallic - a channel for the transmission of low speed varying signals at rates up to 30 baud.

Telegraph Grade - a channel for the transmission of binary signals at rates of 0 to 75 baud or 0 to 150 baud.

Voice Grade - a channel for the transmission of analog signals within an approximate bandwidth of 300 to
3000 Hz.

Program Audio - a channel for the transmission of audio signals. The nominal frequency bandwidths are from 200 to 3500 Hz, from 100 to 5000 Hz, from 50 to 8000 Hz, or from 50 to 15000 Hz.

Video - a channel for the transmission of standard 525 line 60 field monochrome or National Television Systems Committee color video signal and one or two associated 5 or 15 kHz audio signals. The bandwidth is either 30 Hz to 4.5 MHz or 30 Hz to 6.6 MHz.

Digital Data - a channel for the digital transmission of synchronous serial data at rates of 2.4, 4.8, 9.6,
19.2, 56.0 or 64.0 Kbps.

High Capacity - a channel for the transmission of isochronous serial digital data at rates of 1.544, 3.152, 6.312, 44.736 or 274.176 Mbps.

Synchronous Optical - a high speed channel for the transmission of synchronous full duplex data over optical fiber at rates of 155.52 or 622.08 Mbps.

ACCESS SERVICE

9. SPECIAL ACCESS SERVICE (Cont'd)

9.1 General (Cont'd)

9.1.1 Channel Types (Cont'd)

Detailed descriptions of each of the channel types are provided in 9.4 through 9.11 following.

The customer also has the option of ordering Voice Grade and High Capacity facilities (i.e., 1.544 Mbps, 3.152 Mbps, 6.312 Mbps, 44.736 Mbps and 274.176 Mbps) to Telephone Company hubs for multiplexing to individual channels of a lower capacity or bandwidth. Descriptions of the types of multiplexing available at the hubs, as well as the number of individual channels which may be derived from each type of facility, are set forth in 9.6 and 9.10 following. Additionally, the customer may specify optional features for the individual channels derived from the facility to further tailor the channel to meet specific communications requirements. Descriptions of the optional features and functions available are set forth in 9.2.1 following.

For example, a customer may order a 3.152 Mbps High Capacity channel from a customer designated premises to a Telephone Company hub for multiplexing to two 1.544 Mbps channels. The 1.544 Mbps channels may be further multiplexed at the same or a different hub to Voice Grade channels or may be extended to other customer designated premises or hubs. Optional features may be added to either the 1.544 Mbps or the Voice Grade channels.

Synchronous Optical Channel Service provides the customer with the option of ordering Add/Drop Multiplexing at a suitably equipped wire center. This allows lower level signals to be added or dropped from a high speed optical carrier channel for delivery to a customer premises. A description of Add/Drop Multiplexing is set forth in 9.11.3(B) following.

9. SPECIAL ACCESS SERVICE (Cont'd)

9.1 General (Cont'd)

9.1.2 Service Descriptions

For the purposes of ordering, there are eight categories of Special Access Service. These are:

Service Designator Codes (C)

Metallic
Telegraph Grade
Voice
Program Audio
Video
Digital Data
High Capacity
Synchronous Optical (C)

Each service consists of a basic channel to which a technical specifications package (customized or predefined), channel interface(s) and, when desired, optional features and functions are added to construct the service desired by the customer. (C)

Customized technical specifications packages will be provided where technically feasible. If the Telephone Company determines that the requested parameter specifications are not compatible, the customer will be advised and given the opportunity to change the order.

When a customized channel is ordered the customer will be notified whether Additional Engineering Charges apply. In such cases, the customer will be advised and given the opportunity to change the order.

The channel descriptions provided in 9.4 through 9.11 following, specify the characteristics of the basic channel and indicate whether the channel is provided between customer designated premises, between a customer designated premises and a Telephone Company hub where bridging or multiplexing functions are performed, between hubs, between a customer designated premises and a WATS Serving Office, or between a customer designated premises and a wire center equipped for Frame Relay Access Service.

9. SPECIAL ACCESS SERVICE (Cont'd)

9.1 General (Cont'd)

9.1.2 Service Descriptions (Cont'd)

9.1.2.A Information pertaining to the technical specifications packages indicates the transmission parameters that are available with each package. Applicable Technical References are set forth in 9.1.2.E following. (C)

9.1.2.B Channel interfaces at each Point of Termination on a two-point service may be symetrical or asymetrical. On a multipoint service they may also be symetrical or asymetrical, but communications can only be provided between compatible channel interfaces. Only certain channel interfaces are compatible. (C)

9.1.2.C Only certain channel interface combinations are available with the predefined technical specifications packages. These are delineated in the Technical References set forth in 9.1.2.E following. When a customized channel is requested, all channel interface combinations available with the specified type of service are available with the customized channel.

9.1.2.D The optional features and functions available with each type of Special Access Service are described in this section. The optional features and functions information also indicates with which technical specifications packages they are available. Applicable Technical References are set forth in 9.1.2.E following. (C)

ACCESS SERVICE

9. SPECIAL ACCESS SERVICE (Cont'd)

9.1 General (Cont'd)

9.1.2 Service Descriptions (Cont'd)

9.1.2.E All services installed will conform to the transmission specifications standards contained in this tariff or in the following Technical References for each category of service:

Metallic	TR-NPL-000336
Telegraph Grade	TR-NPL-000336
Voice Grade	TR-TSY-000335
	PUB 41004, Table 4
Program Audio	TR-NPL-000337
and associated Addendum	
Video	TR-NPL-000338
Digital Data	TR-NWT-000341
For 2.4,4.8,9.6&56.0 Kbps	BellCore Pub 62310
	(MDP-326-726)
For 19.2 Kbps	INC Bulletin CB-INC-100
For 64.0 Kbps	AT&T PUB 62310
High Capacity	TR-INS-000342
	TR-NPL-000054
	PUB 62411
Synchronous Optical	GR-253-CORE
For OC3, OC3c and OC12	GR-1374-CORE
	ANSI T1.105
	ANSI T1.102

9.1.3 Service Configurations

There are three types of service configurations over which Special Access Services are provided: two-point service, multipoint service and Synchronous Optical Channel Service.

9.1.3.A Two-Point Service

A two-point service connects two customer designated premises, either on a directly connected basis or through a hub where multiplexing functions are performed, or a customer designated premises and a wire center equipped for Frame Relay Access Service, or a customer designated premises and a WATS Serving Office (WSO).

ACCESS SERVICE

9. SPECIAL ACCESS SERVICE (Cont'd)

9.1 General (Cont'd)

9.1.3 Service Configurations (Cont'd)

9.1.3.A Two-Point Service (Cont'd)

Applicable rate elements are:
- Channel Terminations
- Channel Mileage (as applicable)
- Optional Features and Functions (when applicable)

The following diagram depicts a two-point Voice Grade service connecting two Customer Designated Premises (CDP). The service is provided with
C-Type conditioning.

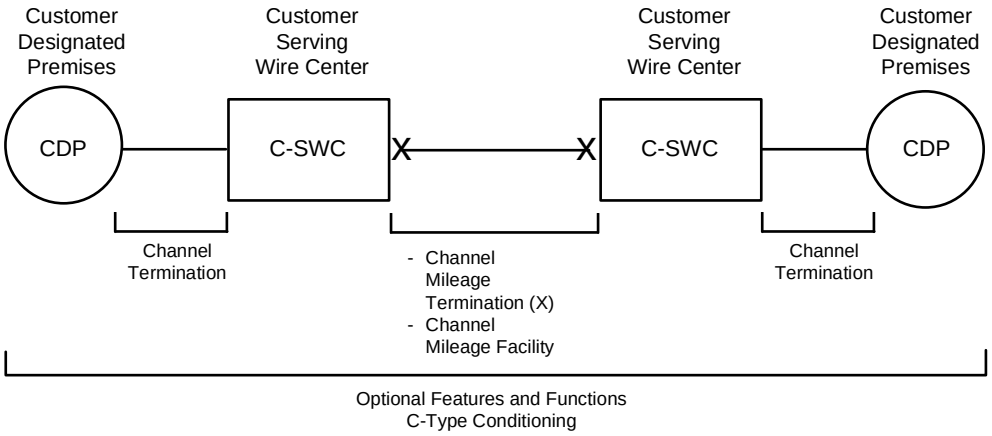

Applicable rate elements are:

- Channel Terminations (applicable one (1) per CDP)
- Channel Mileage
  - 2 Channel Mileage Terminations plus
  - 1 section, Channel Mileage Facility per mile
- C-Type Conditioning Optional Feature

ACCESS SERVICE

9. SPECIAL ACCESS SERVICE (Cont'd)

9.1 General (Cont'd)

9.1.3 Service Configurations (Cont'd)

9.1.3.A Two-Point Service (Cont'd)

The following diagram depicts a two-point Voice Grade service connecting a customer designated premises to a WATS serving office.

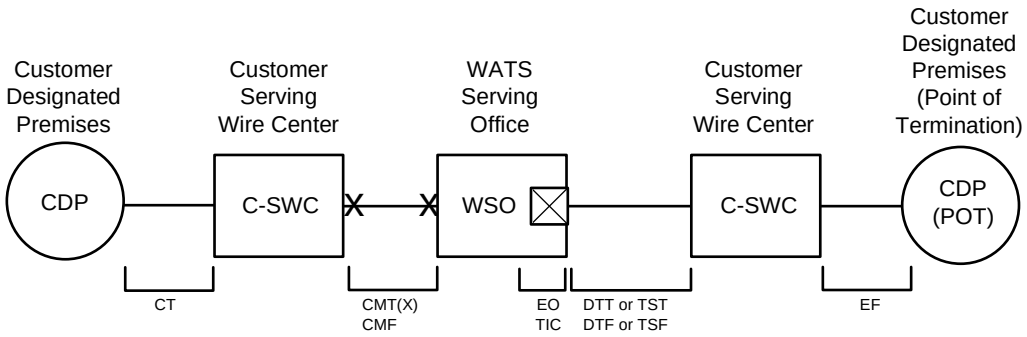

Special Access

CT - Channel Termination
CMT - Channel Mileage Termination
CMF - Channel Mileage Facility

Switched Access

EO - End Office Elements
TIC - Transport Interconnection Charge
DTT - Direct Trunked Termination
TST - Tandem Switched Termination
DTF - Direct Trunked Facility
TSF - Tandem Switched Facility
EF - Entrance Facility

Applicable rate elements for Special Access are:

- Channel Termination
- Channel Mileage
  . 2 Channel Mileage Terminations plus
  . 1 section, Channel Mileage Facility per mile
- Special Access Surcharge*

* May not apply if exemption certification is provided.

ACCESS SERVICE

9. SPECIAL ACCESS SERVICE (Cont'd)

9.1 General (Cont'd)

9.1.3 Service Configurations (Cont'd)

9.1.3.B Multipoint Service

Multipoint service connects three or more customer designated premises through one or more Telephone Company hubs. Only certain types of Special Access Service are provided as multipoint service. These are so designated in the descriptions for the appropriate channel.

The channel between hubs (i.e., bridging locations) on a multipoint service is a mid-link. There is no limitation on the number of mid-links available with a multipoint service. However, when more than three mid-links in tandem are provided the quality of the overall service may be degraded.

Multipoint service utilizing a customized technical specifications package, as set forth in 9.1.2 preceding will be provided when technically possible. If the Telephone Company determines that the requested characteristics for a multipoint service are not compatible, the customer will be advised and given the opportunity to change the order. (C)

When ordering, the customer will specify the desired bridging hub(s). NATIONAL EXCHANGE CARRIER ASSOCIATION TARIFF F.C.C. NO. 4 identifies serving wire centers, hub locations and the type of bridging functions available.

Applicable Rate Elements are:

- Channel Terminations (one per customer designated premises)
- Channel Mileage (as applicable between the serving wire center for each customer designated premises and the hub and between hubs).
- Bridging
- Additional Optional Features and Functions (when applicable).

ACCESS SERVICE

9. SPECIAL ACCESS SERVICE (Cont'd)

9.1 General (Cont'd)

9.1.3 Service Configurations (Cont'd)

9.1.3.B Multipoint Service

Example: Voice Grade multipoint service connecting four customer designated premises (CDP) via two customer specified bridging hubs.

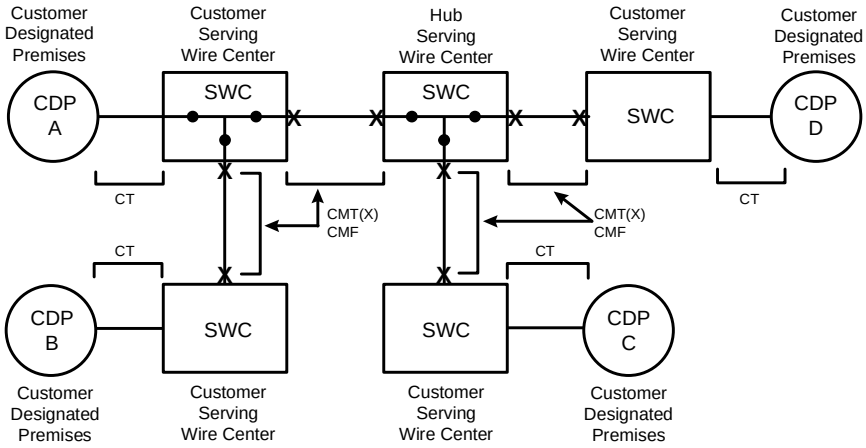

CT - Channel Termination
CMT - Channel Mileage Termination
CMF - Channel Mileage Facility
o - Bridging Port

Applicable rate elements are:

- Channel Terminations (4 applicable)
- Channel Mileage
  - o 2 Channel Mileage Terminations per Channel Mileage Facility section for a total of 8, plus
  - o 4 sections, Channel Mileage Facility per mile
- Bridging Optional Feature (6 applicable, i.e., each bridge port)

ACCESS SERVICE

9. SPECIAL ACCESS SERVICE (Cont'd)

9.1 General (Cont'd)

9.1.3 Service Configurations (Cont'd)

9.1.3.C Synchronous Optical Channel Service

A Synchronous Optical Channel Service connects two customer designated premises via a high speed optical carrier communications path delivering an optical handoff.

Applicable rate elements are:
- Channel Terminations
- Channel Mileage (as applicable)
- Optional Features and Functions (when applicable)

9.1.3.C(1) The following diagram depicts a synchronous optical channel service connecting two Customer Designated Premises (CDP). The Optional Feature and Function of a Customer Node was ordered at one CDP.

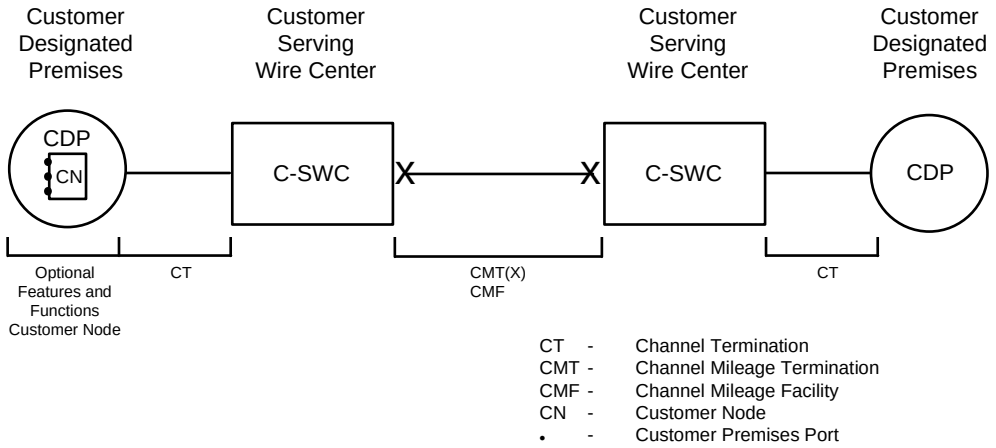

Applicable rate elements are:

- Channel Terminations (applicable one (1) per CDP)
- Channel Mileage
  - 2 Channel Mileage Terminations plus
  - 1 Section, Channel Mileage Facility per mile
- Customer Node Optional Feature
  (1 Customer Node applicable and 3 Customer Premises Ports applicable, i.e., each port)

ACCESS SERVICE

9. SPECIAL ACCESS SERVICE (Cont'd)

9.1 General (Cont'd)

9.1.3 Service Configurations (Cont'd)

9.1.3.C Synchronous Optical Channel Service

9.1.3.C(2) The following diagram depicts a Synchronous Optical Channel Service connecting three Customer Designated Premises. CDP-A and CDP-B are connected using an Add/Drop Multiplexer. At the Add/Drop Multiplexer, the customer may drop off lower speed special access services. Rates and charges are as set forth in 10.6.11 following.

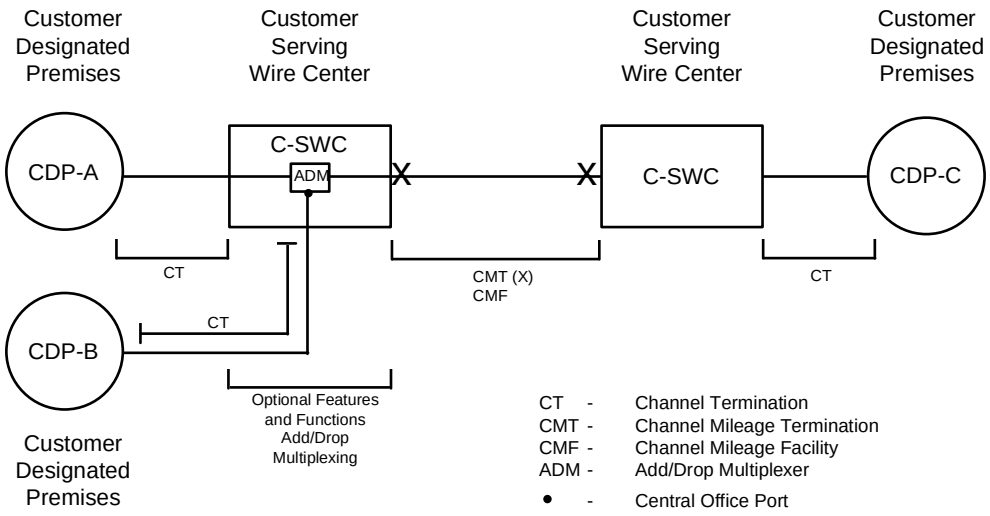

Applicable rate elements are:

- Channel Terminations (applicable one (1) per CDP)
- Channel Mileage
  - Channel Mileage Termination (2 applicable)
  - 1 Section, Channel Mileage Facility per mile
- Add/Drop Multiplexing Optional Feature (1 Central Office Port applicable, i.e., each port)

ACCESS SERVICE

9. SPECIAL ACCESS SERVICE (Cont'd)

9.1 General (Cont'd)

9.1.4 Alternate Use

Alternate Use occurs when a service is arranged by the Telephone Company so that the customer can select different types of transmission at different times. A customer may use a service in any privately beneficial manner. However, where technical or engineering changes are required to effectuate an alternate use, the Telephone Company will make such special arrangements available on an individual case basis.

The arrangement required to transfer the service from one operation to the other (i.e., the transfer relay and control leads) will be rated and provided on an individual case basis and filed in Section 12. following, Specialized Service or Arrangements. The customer will pay the stated tariff rates for the Access Service rate elements for the service ordered [i.e., Channel Terminations, Channel Mileage (as applicable) and Optional Features and Functions (if any)].

9.1.5 Special Facilities Routing

A customer may request that the facilities used to provide Special Access Service be specially routed. The regulations, rates and charges for Special Facilities Routing (i.e., Avoidance, Diversity and Cable-Only) are set forth in Section 12. following.

9.1.6 Design Layout Report

At the request of the customer, the Telephone Company will provide to the customer the make-up of the facilities and services provided under this tariff as Special Access Service to aid the customer in designing its overall service. This information will be provided in the form of a Design Layout Report.

ACCESS SERVICE

9. SPECIAL ACCESS SERVICE (Cont'd)

9.1 General (Cont'd)

9.1.7 Acceptance Testing

At no additional charge, the Telephone Company will, at the customer's request, cooperatively test the following at the time of installation:

9.1.7.A For Voice Grade analog services, the acceptance test will include tests for loss, 3-tone slope, DC continuity, operational signaling, C-notched noise, and C-message noise when these parameters are applicable and specified in the order of service. Additionally, for Voice Grade services, a balance (improved loss) test will be made if the customer has ordered the improved loss optional feature.

9.1.7.B For other analog services (i.e., Metallic, Telegraph, Program Audio, and Video) and for digital services (i.e., Digital Data and High Capacity), acceptance tests will include tests applicable to the service as specified by the customer in the order for service.

In addition to the above tests, Additional Cooperative Acceptance Testing for Voice Grade service to test other parameters is available at the customer's request. All test results will be made available to the customer upon request.

9.1.8 Ordering Options and Conditions

Special Access Service is ordered under the Access Order provisions set forth in Section 3. preceding. Also included in that section are other charges which may be associated with ordering Special Access Service (e.g., Service Date Change Charges, Cancellation Charges, etc.).

ACCESS SERVICE

9. SPECIAL ACCESS SERVICE (Cont'd)

9.2 Rate Regulations

This section contains the specific regulations governing the rates and charges that apply for Special Access.

9.2.1 Rate Categories

There are three basic rate categories which apply to Special Access Service:
- Channel Terminations (described in 9.2.1(A) following)
- Channel Mileage (described in 9.2.1(B) following)
- Optional Features and Functions (described in 9.2.1(C) following).

9.2.1.A Channel Terminations

The Channel Termination rate category recovers the costs associated with the communications path between a customer designated premises and the serving wire center of that premises. Included as part of the Channel Termination is a standard channel interface arrangement which defines the technical characteristics associated with the type of facilities to which the access service is to be connected at the Point of Termination and the type of signaling capability, if any. The signaling capability is provided as an optional feature as set forth in 9.2.1.C following.

For Synchronous Optical Channel Service the high speed optical communications path is between the Optical Line Termination at the customer designated premises and the serving wire center of that premises.

One Channel Termination charge applies per customer designated premises at which the channel is terminated. This charge will apply even if the customer designated premises and the serving wire center are collocated in a Telephone Company building. For a Special Access Digital Data Service 56.0 or 64.0 Kbps Bit Rate or High Capacity Service Connecting a customer designated premises to a Public Packet Data Network Service as described in Section 10, following, there will be a charge for only one Channel Termination.

ACCESS SERVICE

9. SPECIAL ACCESS SERVICE (Cont'd)

9.2 Rate Regulations (Cont'd)

9.2.1 Rate Categories (Con'td)

9.2.1.A Channel Terminations (Cont'd)

For DS3 High Capacity Service, the Channel Termination rates are made up of the DS3 Capacity Interface rate and the DS3 Channel Installed rate. The Capacity Interface rate is dependent upon the capacity ordered (i.e., Capacity Interface of 1, 3, 6 or 12) and is applicable at each customer designated premises. The capacity ordered is the maximum number of DS3 services that can be terminated on a given service at the customer designated premises (e.g., a capacity of 3 can terminate 1, 2, or 3 DS3 services). One DS3 Channel Installed rate applies per customer designated premises at which the channel is terminated for each DS3 channel that is ordered. These charges will apply even if the customer designated premises and the serving wire center are collocated in a Telephone Company building.

ACCESS SERVICE

9. SPECIAL ACCESS SERVICE (Cont'd)

9.2 Rate Regulations (Cont'd)

9.2.1 Rate Categories (Con'td)

9.2.1.B Channel Mileage

The Channel Mileage rate category recovers the costs associated with the end office equipment and the transmission facilities between the serving wire centers associated with two customer designated premises, between a serving wire center associated with a customer designated premises and a Telephone Company hub, between two Telephone Company hubs, between a serving wire center associated with a customer designated premises and a wire center equipped for Add/Drop Multiplexing (ADM) or between two ADM equipped wire centers. Channel Mileage rates are made up of the Channel Mileage Facility rate and the Channel Mileage Termination rate.

9.2.1.B(1) Channel Mileage Facility

The Channel Mileage Facility rate recovers the per mile cost for the transmission path which extends between the Telephone Company serving wire centers and/or hub(s) or between the Telephone Company serving wire center and another wire center equipped for Frame Relay Access Service.

The Synchronous Optical Channel Service Channel Mileage Facility provides high speed transmission facilities between the Telephone Company serving wire centers or between a Telephone Company serving wire center and another wire center equipped for Add/Drop Multiplexing (ADM) or between two ADM equipped wire centers.

9.2.1.B(2) Channel Mileage Termination

The Channel Mileage Termination rate recovers the cost for end office equipment associated with terminating the facility (i.e., basic circuit equipment and terminations at serving wire centers and hubs). The Channel Mileage Termination rate will apply at the serving wire center(s) for each customer designated premises and Telephone Company hub where the channel is terminated. If the Channel Mileage is between Telephone Company bridging hubs, the Channel Mileage Termination rate will apply per Telephone Company designated hub. If the Channel

ACCESS SERVICE

9. SPECIAL ACCESS SERVICE (Cont'd)

9.2 Rate Regulations (Cont'd)

9.2.1 Rate Categories (Con'td)

9.2.1.B Channel Mileage (Cont'd)

9.2.1.B(2) Channel Mileage Termination (Cont'd)

Mileage is between the serving wire center for a customer designated premises and a WATS Serving Office, the Channel Mileage Termination rate will apply at both the serving wire center associated with the customer designated premises and the WATS Serving Office. If the Channel Mileage is between the serving wire center for a customer designated premises and another wire center equipped for Frame Relay Access Service, the Channel Mileage Termination Rate will apply only at the serving wire center for the customer designated premises.

If the Channel Mileage for Synchronous Optical Channel Service is between the serving wire center for a customer designated premises and a wire center equipped for Add/Drop Multiplexing, the Channel Mileage Termination Rate will apply at both the serving wire center associated with the Customer Designated Premises and the wire center equipped for Add/Drop Multiplexing. If the Channel Mileage is between two wire centers equipped for Add/Drop Multiplexing, the Channel Mileage Termination rate will apply at both wire centers equipped for Add/Drop Multiplexing.

When the Channel Mileage Facility is zero (i.e., collocated serving wire centers), neither the Channel Mileage Facility rate nor the Channel Mileage Termination rate will apply.

ACCESS SERVICE

9. SPECIAL ACCESS SERVICE (Cont'd)

9.2 Rate Regulations (Cont'd)

9.2.1 Rate Categories (Con'td)

9.2.1.C Optional Features and Functions

The Optional Features and Functions rate category recovers the costs associated with optional features and functions which may be added to a Special Access Service to improve its quality or utility to meet specific communications requirements. These are not necessarily identifiable with specific equipment, but rather represent the end result in terms of performance characteristics which may be obtained. These characteristics may be obtained by using various combinations of equipment. Although the equipment necessary to perform a specified function may be installed at various locations along the path of the service, they will be charged for as a single rate element.

Examples of Optional Features and Functions that are available include, but are not limited to, the following:

- Signaling Capability
- Hubbing Functions
- Conditioning
- Transfer Arrangements

Descriptions for each of the available Optional Features and Functions are set forth in 9.4 through 9.11 following.

A hub is a Telephone Company designated serving wire center at which bridging or multiplexing functions are performed. The bridging functions performed are to connect three or more customer designated premises in a multipoint arrangement. The multiplexing functions are to channelize analog or digital facilities to individual services requiring a lower capacity or bandwidth.

NATIONAL EXCHANGE CARRIER ASSOCIATION, INC. TARIFF F.C.C. NO. 4 identifies serving wire centers, hub locations, hub level (i.e., Hub, Terminus Hub, Intermediate Hub, or Super-Intermediate Hub) and the type of bridging or multiplexing functions available. Additionally, subtending wire centers are identified for Intermediate and Super-Intermediate Hubs.

ACCESS SERVICE

9. SPECIAL ACCESS SERVICE (Cont'd)

9.2 Rate Regulations (Cont'd)

9.2.2 Types of Rates and Charges

There are three types of rates and charges. These are monthly rates, daily rates and nonrecurring charges. The rates and charges are described as follows:

9.2.2.A Monthly Rates

Monthly rates are recurring rates that apply each month or fraction thereof that a Special Access Service is provided. For billing purposes, each month is considered to have 30 days.

9.2.2.B Daily Rates

Daily rates are recurring rates that apply to each 24 hour period or fraction thereof that a Program Audio or Video Special Access Service is provided for part-time use. For purposes of applying daily rates, the 24 hour period is not limited to a calendar day.

Part-time Video or Program Audio Service provided within a consecutive 30 day period will be charged the daily rate, not to exceed the monthly rate. For each day or partial day after a consecutive 30 day period of service, a charge equal to 1/30th of the monthly rate shall apply.

ACCESS SERVICE

9. SPECIAL ACCESS SERVICE (Cont'd)

9.2 Rate Regulations (Cont'd)

9.2.2 Types of Rates and Charges (Cont'd)

9.2.2.C Nonrecurring Charges

Nonrecurring charges are one-time charges that apply for specific work activity (i.e., installation or change to an existing service). The types of nonrecurring charges that apply for Special Access Service are: installation of service, installation of optional features and functions, and service rearrangements. These charges are in addition to the Access Order Charge as specified in 12.1.1 following.

9.2.2.C(1) Installation of Service

Nonrecurring charges apply to each service installed. The nonrecurring charges for the installation of service are set for each channel type as a nonrecurring charge for the Channel Termination.

9.2.2.C(2) Installation of Optional Features and Functions

When optional features and functions are installed coincident with the initial installation of service, no separate nonrecurring charge is applicable. When optional features and functions are installed or changed subsequent to the installation of service, an Access Order Charge as specified in 12.1.1 following will apply per order.

ACCESS SERVICE

9. SPECIAL ACCESS SERVICE (Cont'd)

9.2 Rate Regulations (Cont'd)

9.2.2 Types of Rates and Charges (Cont'd)

9.2.2.C Nonrecurring Charges (Cont'd)

9.2.2.C(3) Service Rearrangements

Service rearrangements are changes to existing (installed) services which may be administrative only in nature, as set forth following, or that involve actual physical change to the service. Changes to pending orders are set forth in 5.4 preceding.

Changes in the physical location of the point of termination or customer designated premises are moves as set forth in 9.2.3 following.

Changes in the type of Service or Channel Termination which result in a change of the minimum period requirement will be treated as a discontinuance of the service and an installation of a new service.

Changes in ownership or transfer of responsibility from one customer to another will be treated as a discontinuance of the service and an installation of a new service. In the event the change in ownership or transfer of responsibility is as set forth in 2.1.2(A) preceding where there is no change in facilities or arrangements, the change will be treated as an administrative change.

ACCESS SERVICE

9. SPECIAL ACCESS SERVICE (Cont'd)

9.2 Rate Regulations (Cont'd)

9.2.2 Types of Rates and Charges (Cont'd)

9.2.2.C Nonrecurring Charges (Cont'd)

9.2.2.C(3) Service Rearrangements (Cont'd)

Administrative changes will be made without charge(s) to the customer. Administrative changes are as follows:

- Change of customer name,
- Change of customer or customer's end user premises address when the change of address is not a result of physical relocation of equipment,
- Change in billing data (name, address, or contact name or telephone number),
- Change of agency authorization,
- Change of customer circuit identification,
- Change of billing account number,
- Change of customer test line number,
- Change of customer or customer's end user contact name or telephone number, and
- Change of jurisdiction.

All other service rearrangements will be charged as follows:

- If the change involves the addition of other customer designated premises to an existing service, the nonrecurring charge for the channel termination rate element will apply. The charge(s) will apply only for the location(s) that is being added. The charge(s) will be in addition to an Access Order Charge as set forth in 12.1.1 following.

ACCESS SERVICE

9. SPECIAL ACCESS SERVICE (Cont'd)

9.2 Rate Regulations (Cont'd)

9.2.2 Types of Rates and Charges (Cont'd)

9.2.2.C Nonrecurring Charges (Cont'd)

9.2.2.C(3) Service Rearrangements (Cont'd)

- If the change involves the addition of an optional feature or function (with the exception of the addition of Clear Channel Capability to an existing service), or if the change involves changing the type of signaling on a Voice Grade service, and for all other changes the Access Order Charge as set forth in 12.1.1 following will apply.

- When the Clear Channel Capability optional feature is installed on an existing facility, the addition will be treated as a discontinuance and start of service and all associated non-recurring charges will apply.

9.2.3 Moves

A move involves a change in the physical location of one of the following:

- The Point of Termination at the customer's premises

- The customer's premises

The charges for the move are dependent on whether the move is to a new location within the same building or to a different building.

9.2.3.A Moves Within the Same Building

When the move is to a new location within the same building, the charge for the move will be an amount equal to one half of the nonrecurring (i.e., installation) charge for the service termination affected. There will be no change in the minimum period requirements. This charge is in addition to the Access Order Charge as specified in 12.1.1 following.

ACCESS SERVICE

9. SPECIAL ACCESS SERVICE (Cont'd)

9.2 Rate Regulations (Cont'd)

9.2.3 Moves (Cont'd)

9.2.3.B Moves To a Different Building

Moves to a different building will be treated as a discontinuance and start of service and all associated nonrecurring charges will apply. New minimum period requirements will be established for the new services. The customer will also remain responsible for satisfying all outstanding minimum period charges for the discontinued service.

9.2.4 Minimum Periods

The minimum service period for all services except part-time Video and Program Audio services, DS3 High Capacity Service and Synchronous Optical Channel Service is one month and the full monthly rate will apply to the first month. Adjustments for the quantities of services established or discontinued in any billing period beyond the minimum period are as set forth in 2.4.1(F) preceding. The minimum service period for part-time Video and Program Audio services is a continuous 24-hour period, not limited to a calendar day. The minimum service period for DS3 High Capacity Service and Synchronous Optical Channel Service is twelve months.

ACCESS SERVICE

9. SPECIAL ACCESS SERVICE (Cont'd)

9.2 Rate Regulations (Cont'd)

9.2.5 Mileage Measurement

The mileage to be used to determine the monthly rate for the Channel Mileage Facility is calculated on the airline distance between the locations involved, i.e.,

- the serving wire centers associated with two customer designated premises,
- a serving wire center associated with a customer designated premises and a Telephone Company hub,
- a serving wire center associated with a customer designated premises and a wire center equipped for Frame Relay Access Service,
- two Telephone Company hubs,
- a serving wire center associated with a customer designated premises and a wire center equipped for Add/Drop Multiplexing,
- two wire centers equipped for Add/Drop Multiplexing,
- or between the serving wire center associated with a customer designated premises and a WATS Serving Office.

The serving wire center associated with a customer designated premises is the serving wire center from which this customer designated premises would normally obtain dial tone.

Mileage charges are shown with each channel type. To determine the rate to be billed, first compute the mileage using the V&H coordinates method, as set forth in the NATIONAL EXCHANGE CARRIER ASSOCIATION, INC. TARIFF F.C.C. NO. 4, then multiply the resulting number of miles times the Channel Mileage Facility per mile rate, and add the Channel Mileage Termination rate for each termination. When the calculation results in a fraction of a mile, always round up to the next whole mile before determining the mileage and applying the rates. When more than one Telephone Company is involved in the provision of service, billing will be accomplished as set forth in 2.4.7 preceding.

ACCESS SERVICE

9. SPECIAL ACCESS SERVICE (Cont'd)

9.2 Rate Regulations (Cont'd)

9.2.5 Mileage Measurement

When hubs are involved, mileage is computed and rates applied separately for each section of the Channel Mileage, i.e.,

- customer designated premises serving wire center to hub,
- hub to hub and/or
- hub to customer designated premises serving wire center.

However, when any service is routed through a hub for purposes other than customer specified bridging or multiplexing (e.g., the Telephone Company chooses to so route for test access purposes), rates will be applied only to the distance calculated between the serving wire centers associated with the customer designated premises.

See the service configuration example for multipoint service as set forth in 9.1.3(B) preceding.

When Add/Drop Multiplexing is offered in connection with Synchronous Optical Channel Service, mileage is computed and rates applied separately for each section of the Channel Mileage, i.e.,

- customer designated premises serving wire center to an Add/Drop Multiplexing (ADM) equipped wire center,
- ADM equipped wire center to ADM equipped wire center,
- ADM equipped wire center to a customer designated premises serving wire center.

9.2.6 Facility Hubs

A customer has the option of ordering Voice Grade service or High Capacity services (i.e., DS1, DS1C, DS2, DS3 or DS4) to a facility hub for channelizing to individual services requiring lower capacity facilities (e.g., Telegraph, Voice, Program Audio, etc.).

ACCESS SERVICE

9. SPECIAL ACCESS SERVICE (Cont'd)

9.2 Rate Regulations (Cont'd)

9.2.6 Facility Hubs (Cont'd)

Different locations may be designated as hubs for different facility capacities, e.g., multiplexing from digital to digital may occur at one location while multiplexing from digital to analog may occur at a different location. When placing an Access Order the customer will specify the desired hub.

NATIONAL EXCHANGE CARRIER ASSOCIATION, INC. TARIFF F.C.C. NO. 4 identifies serving wire centers, hub locations, hub level (i.e., Hub, Terminus Hub, Intermediate Hub, or Super-Intermediate Hub) and the type of multiplexing functions available. Additionally, subtending wire centers are identified for Intermediate and Super-Intermediate Hubs.

Some of the types of multiplexing available include the following:

- from higher to lower bit rate
- from higher to lower bandwidth
- from high capacity to voice frequency channels.

Point to point services may be provided on channels of these services to a hub. The transmission performance for the point to point service provided between customer designated premises will be that of the lower capacity or bit rate. For example, when a 1.544 Mbps channel is multiplexed to voice frequency channels, the transmission performance of the channelized services will be Voice Grade, not High Capacity.

The Telephone Company will commence billing the monthly rate for the service to the hub on the date specified by the customer on the Access Order. Individual channels utilizing these services may be installed coincident with the installation of the service to the hub or may be ordered and/or installed at a later date, at the option of the customer. The customer will be billed for a Voice Grade or a High Capacity Channel Termination, Channel Mileage (when applicable), and the multiplexer at the time the service is installed. Individual service rates (by service type) will apply for a Channel Termination and additional Channel Mileage (as required) for each channelized service. These will be billed to the customer as each individual service is installed.

ACCESS SERVICE

9. SPECIAL ACCESS SERVICE (Cont'd)

9.2 Rate Regulations (Cont'd)

9.2.6 Facility Hubs (Cont'd)

Cascading multiplexing occurs when a High Capacity service is de-multiplexed to provide channels with a lesser capacity and one of the lesser capacity channels is further de-multiplexed. For example, a 6.312 Mbps High Capacity service is de-multiplexed to four DS1 channels and then one of the DS1 channels is further de-multiplexed to 24 individual Voice Grade channels.

When cascading multiplexing is performed, whether in the same or a different hub, a charge for the additional multiplexing unit also applies. When cascading multiplexing is performed at different hubbing locations, Channel Mileage charges also apply between the hubs.

The Telephone Company will designate hubs for Program Audio and Video Services. Full-time or part-time service may be provided between customer designated premises or between a customer designated premises and a hub and billed accordingly at the monthly rates set forth in 12.6.5 and 12.6.6 following for a Channel Termination, Channel Mileage and Optional Features and Functions, as applicable. When the service is ordered to a hub, the customer may order full-time or part-time Video and Program Audio services as needed between that hub and additional customer designated premises. The rate elements required to provide the part-time service (i.e., Channel Termination, Channel Mileage and Optional Features and Functions, as applicable) will be billed at daily rates for the duration of the service requested.

ACCESS SERVICE

9. SPECIAL ACCESS SERVICE (Cont'd)

9.3 Surcharge for Special Access Service

9.3.1 General

This tariff does not contemplate a surcharge for Special Access Services.

9. SPECIAL ACCESS SERVICE (Cont'd)

9.4 Metallic Service

9.4.1 Basic Channel Description

A Metallic channel is an unconditioned two-wire channel arranged to transmit direct current and capable of transmitting low speed varying signals at rates up to 30 baud. This channel is provided by metallic or equivalent facilities. Metallic channels are provided between customer designated premises or between a customer designated premises and a Telephone Company hub or hubs where bridging functions are performed. Interoffice metallic facilities will be limited in length to a total of five miles per channel.

Metallic Special Access Services are typically used for applications such as alarm, pilot wire protective relaying, and dc tripping protective relaying. These examples of applications are not intended to limit a customer's use of the channel nor to imply that the channel is limited to a particular use.

Rates and charges for Special Access Metallic Service are as set forth in 12.6.2 following.

9.4.2 Technical Specifications Packages and Network Channel Interfaces

Technical Specifications Packages are set forth in Technical Publication TR-NPL-000336 and a comprehensive list of Network Channel Interface codes can be obtained from Telcordia Technologies Inc. (T)

9.4.3 Optional Features and Functions

Central Office Bridging Capability

9.4.3.A Three Premises Bridging - Provision of tip-to-tip and ring-to-ring connection in a central office of a metallic pair to a third customer designated premises.

9.4.3.B Series Bridging of up to 26 customer designated premises.

Technical Publication TR-NPL-000336 sets forth the technical specifications packages with which the optional features and functions are available.

9. SPECIAL ACCESS SERVICE (Cont'd)

9.5 Telegraph Grade Service

9.5.1 Basic Channel Description

Telegraph Grade channel is an unconditioned channel capable of transmitting binary signals at rates of 0-75 baud or 0-150 baud. This channel is furnished for half- duplex or duplex operation. Telegraph Grade channels are provided between customer designated premises or between a customer designated premises and a Telephone Company hub or hubs.

Telegraph Grade Special Access Services are typically Used for applications such as teletypewriter, telegraph grade control/remote metering, telegraph grade channel, telegraph grade extension, and telegraph grade entrance facilities. These examples of applications are not intended to limit a customer's use of the channel nor to imply that the channel is limited to a particular use.

Rates and charges for Special Access Telegraph Grade Service are as set forth in 12.6.3 following.

9.5.2 Technical Specifications Packages and Network Channel Interfaces

Technical Specifications Packages are set forth in Technical Publication TR-NPL-000336 and a comprehensive list of Network Channel Interface codes can be obtained from Telcordia Technologies, Inc. (T)

9.5.3 Optional Features and Functions

Telegraph Bridging (two-wire and four-wire)

Technical Publication TR-NPL-000336 sets forth the technical specifications packages with which the optional features and functions are available.

9. SPECIAL ACCESS SERVICE (Cont'd)

9.6 Voice Grade Service

9.6.1 Basic Channel Description

A Voice Grade channel is a channel which provides voice frequency transmission capability in the nominal frequency range of 300 to 3000 Hz and may be terminated as two-wire or four-wire. Voice Grade channels are provided between customer designated premises, between a customer designated premises and a Telephone Company hub or hubs, or between a customer designated premises and a WATS Serving Office (WSO).

Voice Grade Special Access Services are typically used For voice and voiceband data applications. Typical examples of voice grade circuits are Foreign Exchange lines (station end only), multipoint private line, voice trunk type, two-point voice grade data (one-way or simultaneous two-way), multipoint voice grade data, and voice grade telephoto or facsimile. These examples of applications are not intended to limit a customer's use of the channel nor to imply that the channel is limited to a particular use.

Rates and charges for Special Access Voice Grade Service are as set forth in 12.6.4 following.

9.6.2 Technical Specifications Packages and Network Channel Interfaces

Technical Specifications Packages are set forth in Technical Publication TR-TSY-000335 and a comprehensive list of Network Channel Interface codes can be obtained from Telcordia Technologies, Inc. (T)

9.6.3 Optional Features and Functions

9.6.3.A Central Office Bridging Capability

9.6.3.A(1) Voice Bridging (two-wire and four-wire)

9.6.3.A(2) Data Bridging (two-wire and four-wire)

9.6.3.A(3) Telephoto Bridging (two-wire and four-wire)

9.6.3.A.(4) DATAPHONE Select-A-Station Bridging with sequential arrangement ports or addressable arrangement ports

ACCESS SERVICE

9. SPECIAL ACCESS SERVICE (Cont'd)

9.6 Voice Grade Service (Cont'd)

9.6.3 Optional Features and Functions (Cont'd)

9.6.3.A Central Office Bridging Capability (Cont'd)

9.6.3.A(5) Telemetry and Alarm Bridging

Split Band, Active Bridging
Passive Bridging
Summation, Active Bridging

The rates for these options are set forth in 12.6.4.C following.

9.6.3.B Central Office Multiplexing

Voice to Telegraph Grade. An arrangement that converts a Voice Grade channel to Telegraph Grade channels using frequency division multiplexing.

The rate for this option is set forth in 12.6.4.C following.

9.6.3.C Conditioning

Conditioning provides more specific transmission characteristics for Voice Grade services. The rates for these options are set forth in 12.6.4.C following.

For two-point services, the parameters apply to each service as measured end-to-end. For multipoint services, the parameters apply as measured on each mid-link or as measured on each end link. C-Type conditioning and Data Capability may be combined on the same service.

ACCESS SERVICE

9. SPECIAL ACCESS SERVICE (Cont'd)

9.6 Voice Grade Service (Cont'd)

9.6.3 Optional Features and Functions (Cont'd)

9.6.3.C Conditioning

9.6.3.C(1) C-Type Conditioning

C-Type Conditioning is provided for the additional control of attenuation distortion and envelope delay distortion on data services. The attenuation distortion and envelope delay distortion specifications for C-Type Conditioning are delineated in Technical Reference TR-TSY-000335.

9.6.3.C(2) Data Capability (D Conditioning)

Data Capability provides transmission characteristics suitable for data communications. Specifically, Data Capability provides for the control of Signal to C-Notched Noise Ratio and intermodulation distortion. It is available for two-point services or three-point multipoint services.

The Signal to C-Notched Noise Ratio and intermodulation distortion parameter for Data Capability are delineated in Technical Reference TR-TSY-000335. The rate for this option is set forth in 12.6.4(C)(2) following.

When a service equipped with Data Capability is used for voice communications, the quality of the voice transmission may not be satisfactory.

ACCESS SERVICE

9. SPECIAL ACCESS SERVICE (Cont'd)

9.6 Voice Grade Service (Cont'd)

9.6.3 Optional Features and Functions (Cont'd)

9.6.3.C Conditioning (Cont'd)

9.6.3.C(3) Telephoto Capability

Telephoto Capability provides transmission characteristics suitable for telephotographic communications. Specifically, Telephoto Capability is provided for the control of attenuation distortion and envelope delay distortion on telephotographic services. The attenuation distortion and envelope delay distortion parameters for Telephoto Capability are delineated in Technical Reference TR-TSY-000335. The rate for this option is set forth in 12.6.4(C)(2) following.

9.6.3.C(4) Sealing Current Conditioning

Sealing Current Conditioning is provided to help maintain continuity on dry metallic loops. It is usually associated with four-wire DA or NO type network channel interfaces.

9.6.3.D Customer Specified Premises Receive Level

This option allows the customer to specify the receive level at the Point of Termination. The level must be within a specific range on effective four-wire transmission. The ranges are delineated in Technical Reference TR-TSY-000335. The rate for this option is set forth in 12.6.4(C)(4) following.

ACCESS SERVICE

9. SPECIAL ACCESS SERVICE (Cont'd)

9.6 Voice Grade Service (Cont'd)

9.6.3 Optional Features and Functions (Cont'd)

9.6.3.E Improved Return Loss

9.6.3.E(1) On Effective Four-Wire Transmission at Four-Wire Point of Termination (applicable to each two-wire port): Provides for a fixed 600 ohm impedance, variable level range and simplex reversal. Telephone Company equipment is required at the customer's premises where this option is ordered. The Improved Return Loss parameters are delineated in Technical Reference TR-TSY-000335. The rate for this option is set forth in 12.6.4(C)(3) following.

9.6.3.E(2) On Effective Two-Wire Transmission at Two-Wire Point of Termination: Provides for more stringent Echo Control specifications. In order for this option to be applicable, the transmission path must be four-wire at one POT and two-wire at the other POT. Placement of Telephone Company equipment may be required at the customer's premises with the two-wire POT. The Improved Return Loss parameters are delineated in Technical Reference TR-TSY-000335. The rate for this option is set forth in 12.6.4(C)(3) following.

9. SPECIAL ACCESS SERVICE (Cont'd)

9.6 Voice Grade Service (Cont'd)

9.6.3 Optional Features and Functions (Cont'd)

9.6.3.F Signaling Capability

Signaling Capability provides for the ability to transmit signals from one customer premises to another customer premises on the same service. The rate for this option is set forth in 12.6.4(C)(6) following.

Technical Publication TR-TSY-000335 contains network channel interfaces for which Voice Grade service do not require signaling capability. A comprehensive list of specific Network Channel Interface codes can be obtained from Telcordia Technologies, Inc. (T)

Technical Publication TR-TSY-000335 contains network channel interfaces for which Voice Grade service require signaling capability. The signaling capability charge will not apply when used in the provision of WATS access service.

9.6.3.G Selective Signaling Arrangement

An arrangement that permits code selective ringing for up to ten codes on a multipoint service. The rate for this option is set forth in 12.6.4(C)(7) following.

ACCESS SERVICE

9. SPECIAL ACCESS SERVICE (Cont'd)

9.6 Voice Grade Service (Cont'd)

9.6.3 Optional Features and Functions (Cont'd)

9.6.3.H Transfer Arrangement

An arrangement that affords the customer an additional measure of flexibility in the use of an access channel(s). The arrangement can be utilized to transfer a leg of a Special Access Service to another channel that terminates in either the same or a different customer premises. A key activated or dial-up control service is required to operate the transfer arrangement. A spare channel, if required, is not included as part of the option. The rate for this option is set forth in 12.6.4(C)(8) following.

9.6.3.I Public Packet Switching Network Interface Arrangement (T)

An arrangement that provides the interface requirements that permit a Voice Grade service to interface with a Public Packet Switching Network packet switch located in a Telephone Company premises. The interface is compatible with X.25 and X.75 packet switching protocols as defined by the CCITT. This option is provided on an Individual Case Basis as set forth in 12.6.4(C)(9) following.

9.6.3.J Four-Wire/Two-Wire Conversions

When a customer requests that an effective four-wire channel be terminated with a two-wire channel interface at the customer designated premises, a four-wire to two-wire conversion is required. The customer will be charged the four-wire Channel Termination rate as set forth in 12.6.4(A) following when an effective four-wire is specified in the order for service. The rate for the conversion is included as part of the basic four-wire Channel Termination rate.

ACCESS SERVICE

9. SPECIAL ACCESS SERVICE (Cont'd)

9.6 Voice Grade Service (Cont'd)

9.6.3 Optional Features and Functions (Cont'd)

9.6.3.K Improved Two-Wire Voice Transmission

9.6.3.K(1) Loss Deviation

The maximum Loss Deviation of the 1004 Hz loss relative to the Expected Measured Loss (EML) is -4.0 dB to +4.0 dB.

9.6.3.K(2) Attenuation Distortion

The maximum Attenuation Distortion in the 404 to 280 Hz frequency band relative to loss at 1004 Hz is -2.0 dB to +6.0 dB.

9.6.3.K(3) C-Message Noise

The maximum C-Message Noise for the transmission path at the route miles listed is less than:

Route Miles	C-Message Noise
less than 50	35 dBrnco
51 to 100	37 dBrnco
101 to 200	40 dBrnco
201 to 400	43 dBrnco
401 to 1000	45 dBrnco

9.6.3.K(4) Return Loss

The Return Loss, expressed as Echo Return Loss (ERL) and Singing Return Loss (SRL), is equal to or greater than:

ERL	13.0 dB
SRL	6.0 dB

The rate for the provision of Improved Two-Wire Voice Transmission is included as part of the basic Channel Termination rate.

9. SPECIAL ACCESS SERVICE (Cont'd)

9.7 Program Audio Service

9.7.1 Basic Channel Description

A Program Audio channel is a channel with bandwidth measured in Hz for the transmission of a complex signal voltage. The actual bandwidth is a function of the channel interface selected by the customer. Only one-way transmission is provided. Program Audio channels are provided between customer designated premises or between a customer designated premises and a Telephone Company hub or hubs.

Program Audio Special Access services are typically used in full-time and part-time applications for radio broadcasting, noncommercial educational audio, and wired music. These examples of applications are not intended to limit a customer's use of the channel nor to imply that the channel is limited to a particular use.

Rates and charges for Special Access Program Audio Service are as set forth in 12.6.5 following.

9.7.2 Technical Specifications Packages and Network Channel Interfaces

Technical Specifications Packages are set forth in Technical Publication TR-NPL-000336 and a comprehensive list of Network Channel Interface codes can be obtained from Telcordia Technologies, Inc. (T)

9.7.3 Optional Features and Functions

9.7.3.A Central Office Bridging Capability

Distribution Amplifier

9.7.3.B Gain Conditioning

Control of 1004 Hz AML at initiation of service to 0 dB □ 0.5 dB.

9. SPECIAL ACCESS SERVICE (Cont'd)

9.7 Program Audio Service

9.7.3 Optional Features and Functions (Cont'd)

9.7.3.C Stereo

Provision of a pair of gain/phase equalized channels for stereo applications. (An additional Program Audio channel must be ordered separately.)

Technical Specifications Packages as set forth in Technical Publication TR-NPL-000337 shows the technical specifications packages with which the optional features and functions are available. (C)

9. SPECIAL ACCESS SERVICE (Cont'd)

9.8 Video Service

9.8.1 Basic Channel Description

A Video channel is a channel with one-way transmission capability for a standard 525 line/60 field monochrome, or National Television Systems Committee color, video signal and one or two associated 5 or 15 kHz audio signal(s). The associated audio signal(s) may be either diplexed or provided as one or two separate channels. The provision and the bandwidth of the associated audio signal(s) is a function of the channel interface selected by the customer. Video channels are provided between customer designated premises or between a customer designated premises and a Telephone Company hub or hubs.

Rates and charges for Special Access Video Service are as set forth in 12.6.6 following.

9.8.2 Technical Specifications Packages and Network Channel Interfaces

Technical Specifications Packages are set forth in Technical Publication TR-NPL-000336 and a comprehensive list of Network Channel Interface codes can be obtained from Telcordia Technologies, Inc. (T)

(D)

(D)

9. SPECIAL ACCESS SERVICE (Cont'd)

9.9 Digital Data Service

9.9.1 Basic Channel Description

A Digital Data channel is a channel for duplex four-wire transmission of synchronous serial data at the rate of 2.4, 4.8, 9.6, 19.2, 56.0 or 64.0* Kbps. The actual bit rate is a function of the channel interface selected by the customer. The channel provides a synchronous service with timing provided by the Telephone Company through the Telephone Company's facilities to the customer in the received bit stream. Digital Data channels are provided as either hubbed or non-hubbed services between customer designated premises or between a customer designated premises and a Telephone Company hub or hubs. The hubs providing hubbed digital service and the wire centers providing non-hubbed digital service are identified in NATIONAL EXCHANGE CARRIER ASSOCIATION, INC., WIRE CENTER INFORMATION, TARIFF F.C.C. NO. 4.

The customer may provide the Channel Service Unit-type equipment or other Network Channel Terminating Equipment associated with the Digital Data channel at the customer premises.

The Telephone Company will provide a channel capable of meeting a monthly average performance equal to or greater than 99.875% error-free seconds (if provided through a Digital Data hub) while the channel is in service, if it is measured through a CSU equivalent which is designed, manufactured, and maintained to conform with the specifications contained in Technical Reference PUB 62310.

Rates and charges for Special Access Digital Data Service are as set forth in 12.6.7 following.

9.9.2 Technical Specifications Packages and Network Channel Interfaces

Technical Specifications Packages are set forth in Technical Publication TR-NPL-000336 and a comprehensive list of Network Channel Interface codes can be obtained from Telcordia Technologies, Inc. (T)

* When 64.0 Kbps service is multiplexed on a DS1 High Capacity service, the DS1 must be equipped to provide Clear Channel Capability.

9. SPECIAL ACCESS SERVICE (Cont'd)

9.9 Digital Data Service

9.9.2 Technical Specifications Packages and Network Channel Interfaces (Cont'd)

(D)

(D)

9.9.3 Optional Features and Functions

The Optional Features and Functions described in (A), (B), and (C) following are only available where Digital Data Service is provided via a hub. The Optional Features and Functions described in (D) following are available where Digital Data Service is provided on a non-hubbed basis.

9.9.3.A Central Office Bridging Capability

Bridging is not available on a 64.0 Kbps channel.

9.9.3.B Transfer Arrangement

An arrangement that affords the customer an additional measure of protection and/or flexibility in the use of their access channel(s) on a 1xN basis. The arrangement can be utilized to transfer a leg of a Special Access Service to either a spare or working channel that terminates in either the same or a different customer designated premises. This arrangement is only available at a Telephone Company designated hub. A key activated or dial-up control service is required to operate the transfer arrangement. A spare channel, if required, is not included as a part of the option.

9. SPECIAL ACCESS SERVICE (Cont'd)

9.9 Digital Data Service

9.9.3 Optional Features and Functions (Cont'd)

9.9.3.C Public Packet Switching Network (PPSN) Interface Arrangement

An arrangement that provides the interface requirements that permit a Digital Data Service to interface with a Public Packet Switching Network packet switch located in a Telephone Company premises. The interface is compatible with X.25 and X.75 packet switching protocols as defined by the CCITT.

Technical Specifications Packages as set forth in Technical Publication TR-NPL-000341 shows the technical specifications packages with which the optional features and functions are available. (C)

9.9.3.D Public Packet Data Service Interface Arrangement

An arrangement that provides for the interface requirements that permit a Digital Data Service to interface with a Public Packet Data switch located in a Telephone Company premises. The interface is compatible with Frame Relay packet switching protocols. The interface is only available for 56.0 kbps and 64.0 kbps rates.

Technical Specifications Packages as set forth in Technical Publication TR-NPL-000341 shows the technical specifications packages with which the optional features and functions are available. (C)

ACCESS SERVICE

9. SPECIAL ACCESS SERVICE (Cont'd)

9.10 High Capacity Service

9.10.1 Basic Channel Description

A High Capacity channel is a channel for the transmission of nominal 64.0 Kbps* or 1.544, 3.152, 6.312, 44.736, or 274.176 Mbps isochronous serial data. The actual bit rate is a function of the channel interface selected by the customer. High Capacity channels are provided between customer designated premises or between a customer designated premises and a Telephone Company hub or hubs.

The customer may provide the Network Channel Terminating Equipment associated with the High Capacity channel at the customer's premises.

A channel with technical specifications package HC1 will be capable of an error-free second performance of 98.75% over a continuous 24 hour period as measured at the 1.544 Mbps rate through a CSU equivalent which is designed, manufactured, and maintained to conform with the specifications contained in Technical Reference PUB 62411.

Rates and charges for Special Access High Capacity Service are as set forth in 12.6.8 following.

* Available only as a channel of a 1.544 Mbps facility to a Telephone Company Digital Data hub or as a cross connect of two 2.4, 4.8, 9.6, 56.0 or 64.0 Kbps channels of two 1.544 Mbps facilities to a Digital Data hub(s). The customer must provide system and channel assignment data.

9. SPECIAL ACCESS SERVICE (Cont'd)

9.10 High Capacity Service (Cont'd)

9.10.2 Technical Specifications Packages and Network Channel Interfaces

Technical Specifications Packages are set forth in Technical Publication TR-NPL-000336 and a comprehensive list of Network Channel Interface codes can be obtained from Telcordia Technologies, Inc. (T)

The following bit rates are available for a High Capacity channel:

Bit Rate
1.544 Mbps
274.176 Mbps
3.152 Mbps
44.736 Mbps
6.312 Mbps

* A 64.0 Kbps channel is available as a channel(s) of a 1.544 Mbps channel to a Telephone Company hub.

ACCESS SERVICE

9. SPECIAL ACCESS SERVICE (Cont'd)

9.10 High Capacity Service (Cont'd)

9.10.3 Optional Features and Functions

9.10.3.A Automatic Loop Transfer

The Automatic Loop Transfer provides protection on a 1xN basis against failure of the facilities between a customer designated premises and the wire center serving that premises. Protection is furnished through the use of a switching arrangement that automatically switches to a spare channel line when a working line fails. The spare channel is not included as a part of the option. This option requires compatible equipment at both the serving wire center and the customer designated premises. The customer is responsible for providing the equipment at its designated premises.

9.10.3.B Transfer Arrangement

An arrangement that affords the customer an additional measure of flexibility in the use of their access channel(s). The arrangement can be utilized to transfer a leg of a Special Access Service to either a spare or working channel that terminates in either the same or a different customer designated premises. A key activated or dial-up control service is required to operate the transfer arrangement. A spare channel, if required, is not included as part of the option.

ACCESS SERVICE

9. SPECIAL ACCESS SERVICE (Cont'd)

9.10 High Capacity Service (Cont'd)

9.10.3 Optional Features and Functions (Cont'd)

9.10.3.C Central Office Multiplexing

9.10.3.C.(1) DS4 to DS1

An arrangement that converts a 274.176 Mbps channel to 168 DS1 channels using digital time division multiplexing.

9.10.3.C(2) DS3 to DS1

An arrangement that converts a 44.736 Mbps channel to 28 DS1 channels using digital time division multiplexing.

9.10.3.C(3) DS2 to DS1

An arrangement that converts a 6.312 Mbps channel to four DS1 channels using digital time division multiplexing.

9.10.3.C(4) DS1C to DS1

An arrangement that converts a 3.152 Mbps channel to two DS1 channels using digital time division multiplexing.

9.10.3.C(5) DS1 to Voice

An arrangement that converts a 1.544 Mbps channel to 24 channels for use with Voice Grade Services. A channel(s) of this DS1 to the Hub can also be used for a Digital Data Service.

9.10.3.C(6) DS1 to DS0

An arrangement that converts a 1.544 Mbps channel to 23 64.0 Kbps channels utilizing digital time division multiplexing.

ACCESS SERVICE

9. SPECIAL ACCESS SERVICE (Cont'd)

9.10 High Capacity Service (Cont'd)

9.10.3 Optional Features and Functions (Cont'd)

9.10.3.C Central Office Multiplexing (Cont'd)

9.10.3.C(7) DS0 to Subrate

An arrangement that converts a 64.0 Kbps channel to subspeeds of up to twenty 2.4 Kbps, ten 4.8 Kbps, or five 9.6 Kbps channels using digital time division multiplexing.

The table set forth in 15.2.1(G) following shows the technical specifications packages with which the optional features and functions are available.

9.10.3.D Clear Channel Capability

9.10.3.D(1) Clear Channel Capability is an arrangement that allows a customer to transport 1.536 Mbps information rate signals over a 1.544 Mbps High Capacity channel or over a 1.544 Mbps High Capacity channel derived from a multiplexed 44.736 Mbps High Capacity channel with no constraint on the quantity or sequence of one and zero bits. This arrangement requires the customer signal at the channel interface to conform to Bipolar with Eight Zero Substitution (B8ZS) line code as described in Technical Reference TR-NPL-000054 and Technical Reference TR-INS-000342. (T)

9.10.3.D(2) Clear Channel Capability is provided, subject to availability of facilities, on DS1/1.544 Mbps High Capacity channels between two customer designated premises and on multiplexed DS3/44.736 Mbps High Capacity channels or multiplexed DS1/1.544 Mbps High Capacity channels* between a Telephone Company hub office and a customer designated premises. The wire centers providing CCC are identified in NATIONAL EXCHANGE CARRIER ASSOCIATION, INC., WIRE CENTER INFORMATION, TARIFF F.C.C. NO. 4. (T)

* Available only on a DS1-to-Digital multiplexed configuration.

ACCESS SERVICE

9. SPECIAL ACCESS SERVICE (Cont'd)

9.10 High Capacity Service (Cont'd)

9.10.3 Optional Features and Functions (Cont'd)

9.10.3.E Shared SONET Ring Interoffice Transport

9.10.3.D(3) The Clear Channel Capability optional feature may be ordered at the same time the High Capacity service is ordered or it may be ordered as an addition to an existing High Capacity Service. The customer must agree to out-of-service periods required to add this feature to an existing High Capacity Service. The charges for the Clear Channel Capability optional feature are as set forth in 9.2.2(C)(3) preceding. (M)

9.10.3.E(1) Shared SONET Ring Interoffice Transport (SSRIT) is a non-chargeable optional feature which provides interoffice transmission of a DS3 High Capacity Service over a SONET-based facility deployed in a ring configuration. Shared SONET Ring Interoffice Transport provides increased reliability and functionality using a self-healing ring topology designed to continually monitor service quality, detect any failure within the system, and automatically self-heal within 50 milliseconds around the point of failure by switching to a protect path to ensure the flow of services between locations within the self-healing ring. (T)

9.10.3.E(2) Shared SONET Ring Interoffice Transport is provided for the interoffice portion of DS3 High Capacity Service, subject to availability of SONET ring facilities. The wire centers offering Shared SONET Ring Interoffice Transport are identified in NATIONAL EXCHANGE CARRIER ASSOCIATION, INC., WIRE CENTER INFORMATION, TARIFF F.C.C. NO. 4.

9.10.3.E(3) The Shared SONET Ring Interoffice Transport optional feature may be ordered at the same time the DS3 High Capacity service is ordered or it may be ordered as an addition to an existing DS3 High Capacity Service. The customer must agree to out-of-service periods required to add this feature to an existing DS3 High Capacity Service. The charges for the Shared SONET Ring Interoffice Transport optional feature are as set forth in 9.2.2.(C)(3) preceding.

ACCESS SERVICE

9. SPECIAL ACCESS SERVICE (Cont'd)

9.11 Synchronous Optical Channel Service

9.11.1 Basic Channel Description

A Synchronous Optical Channel Service channel provides dedicated transport utilizing Synchronous Optical Network (SONET) transmission standards. Synchronous Optical Channel Service provides optical network capability to customers requiring connections at transmission rates of 155.52 Mbps (OC3) and 622.08 Mbps (OC12). Synchronous Optical Channel Service is provided between two customer designated premises (CDP) through one or more Telephone Company wire centers. In addition, customers at an ADM equipped wire center may add or drop bandwidth capacity from the synchronous optical channel for delivery to a customer premises.

Each channel will be configured with one working and one protect fiber pair within the same sheath between the CDP and the serving wire center of the CDP which provides redundancy to protect the customer's service. Should a failure occur, the SONET technology will automatically switch the customer's transmission to the dedicated protect fiber pair.

The customer may provide node and port equipment at the CDP which allows the high speed optical carrier channel to be converted to an electrical signal at a lower speed. The provision of such equipment by the customer is subject to compatibility with the Telephone Company's equipment in the serving wire center and must comply with the standards specified in GR-253-CORE.

The OC3 channel is available in a non-concatenated format (OC3) which provides three individual signals or in a concatenated format (OC3c) which provides a single signal.

9. SPECIAL ACCESS SERVICE (Cont'd)

9.11 Synchronous Optical Channel Service

9.11.1 Basic Channel Description (Cont'd)

Synchronous Optical Channel Service is available at the wire centers as identified in National Exchange Carrier Association, Inc. Tariff F.C.C. No. 4.

Rates and charges for Synchronous Optical Channel Service are as set forth in 12.6.9 following.

9.11.2 Network Channel Interfaces

Compatible channel interfaces for Synchronous Optical Channel Service are as set forth in Technical Publication GR-253-CORE. A comprehensive list of specific Network Channel Interface codes can be obtained from Telcordia Technologies, Inc. (T)

.

The following bit rates are available for a synchronous optical channel:

Bit Rate
155.52 Mbps (OC3, OC3c)
622.08 Mbps (OC12)

ACCESS SERVICE

9. SPECIAL ACCESS SERVICE (Cont'd)

9.11 Synchronous Optical Channel Service

9.11.3 Optional Features and Functions

9.11.3.A Customer Node

The Customer Node is Telephone Company provided equipment located at the customer designated premises that terminates a high speed optical service (OC3, OC3c or OC12).

The Customer Node may be configured in the following ways:

OC3 - one to three STS-1 channels or one to three DS3 channels or up to 28 DS1 channels per DS3 or any combination of the three or one OC3 channel.

OC3c - one OC3c channel.

OC12 - up to four OC3/OC3c channels or up to twelve DS3 channels or up to 28 DS1 channels per DS3 or any combination of the three.

Rates and charges for the Customer Node are as set forth in 12.6.9(E)(1) following.

A Customer Node must be configured with one or more Customer Premises Ports to provide for the DS1, DS3, STS-1 and/or OC3/OC3c channelization that must take place at the customer premises. The quantity of ports is determined based on the number of DS1, DS3, TS-1 and/or OC3/OC3c channels ordered by the customer. The available speeds of the Customer Premises Port are as follows:

ACCESS SERVICE

9. SPECIAL ACCESS SERVICE (Cont'd)

9.11 Synchronous Optical Channel Service

9.11.3 Optional Features and Functions

9.11.3.A Customer Node (Cont'd)

Customer Premises Port	Speed	
OC3, OC3c	155.52	Mbps
STS-1	51.84	Mbps
DS3	44.736	Mbps
DS1	1.544	Mbps

Rates and charges for the Customer Premises Port are as set forth in 12.6.9(E)(2) following.

9.11.3.B Add/Drop Multiplexing

Add/Drop Multiplexing allows lower level signals to be added or dropped from an optical carrier channel at a wire center equipped for Add/Drop Multiplexing.

Add/Drop Multiplexing may be configured with Central Office Ports in the following ways:

OC3 - one to two DS3 ports or one to two groups of up to 28 DS1 ports or any combination of the two.

OC12 - one to three OC3/OC3c ports.

The Central Office Port is the rate element that provides the connection from a High Capacity or Synchronous Optical Channel Service Channel Termination to an Add/Drop Multiplexer at a wire center. There are three Central Office Ports available. They are:

Central Office Port	Speed	
OC3, OC3c	155.52	Mbps
DS3	44.736	Mbps
DS1	1.544	Mbps

The OC3/OC3c Central Office Port is only available with an Add/Drop Multiplexer operating at OC12.

ACCESS SERVICE

9. SPECIAL ACCESS SERVICE (Cont'd)

9.11 Synchronous Optical Channel Service

9.11.3 Optional Features and Functions

9.11.3.B Add/Drop Multiplexing (Cont'd)

When an OC3 port is derived from an OC12 and is further de-multiplexed to DS3, an additional DS3 port charge will apply. When a DS3 port is de-multiplexed to DS1, or a DS1 port is de-multiplexed to a lower level signal, rates and charges as set forth in 12.6.9(D)(1) will apply.

Rates and charges for the Central Office Port are as set forth in 12.6.9.11(D)(2) following.

9.11.3.C Shared SONET Ring Interoffice Transport

9.11.3.C(1) Shared SONET Ring Interoffice Transport (SSRIT) is a non-chargeable optional feature which provides interoffice transmission of a Synchronous Optical Channel Service over a SONET-based facility deployed in a ring configuration. Shared SONET Ring Interoffice Transport provides increased reliability and functionality using a self-healing ring topology designed to continually monitor service quality, detect any failure within the system, and automatically self-heal within 50 milliseconds around the point of failure by switching to a protect path to ensure the flow of services between locations within the self-healing ring.

9.11.3.C(2) Shared SONET Ring Interoffice Transport is provided for the interoffice portion of Synchronous Optical Channel Service, subject to availability of SONET ring facilities. The wire centers offering Shared SONET Ring Interoffice Transport are identified in NATIONAL EXCHANGE CARRIER ASSOCIATION, INC., WIRE CENTER INFORMATION, TARIFF F.C.C. NO. 4.

ACCESS SERVICE

9. SPECIAL ACCESS SERVICE (Cont'd)

9.11 Synchronous Optical Channel Service

9.11.3 Optional Features and Functions

9.11.3.C Shared SONET Ring Interoffice Transport (Cont'd)

9.11.3.C(3) The Shared SONET Ring Interoffice Transport optional feature may be ordered at the same time the Synchronous Optical Channel Service is ordered or it may be ordered as an addition to an existing Synchronous Optical Channel Service. The customer must agree to out-of-service periods required to add this feature to an existing Synchronous Optical Channel Service. The charges for the Shared SONET Ring Interoffice Transport optional feature are as set forth in 12.6.11 preceding.

9.12 Individual Case Filings

Certain services set forth in Special Access Service, Section 9. are provided on an Individual Case Basis.

ACCESS SERVICE

10. RESERVED FOR FUTURE USE (C)

(D)

(D)

ACCESS SERVICE

10. <u>RESERVED FOR FUTURE USE</u> (Cont'd)

(D)

(D)

ACCESS SERVICE

10. <u>RESERVED FOR FUTURE USE</u> (Cont'd)

(D)

(D)

ACCESS SERVICE

10. RESERVED FOR FUTURE USE (Cont'd)

(D)

(D)

ACCESS SERVICE

10. RESERVED FOR FUTURE USE (Cont'd)

(D)

(D)

ACCESS SERVICE

10. RESERVED FOR FUTURE USE (Cont'd)

(D)

(D)

ACCESS SERVICE

10. RESERVED FOR FUTURE USE (Cont'd)

(D)

(D)

ACCESS SERVICE

10. <u>RESERVED FOR FUTURE USE</u> (Cont'd)

(D)

(D)

ACCESS SERVICE

10. RESERVED FOR FUTURE USE (Cont'd)

(D)

(D)

ACCESS SERVICE

10. RESERVED FOR FUTURE USE (Cont'd)

(D)

(D)

ACCESS SERVICE

10. RESERVED FOR FUTURE USE (Cont'd)

(D)

(D)

ACCESS SERVICE

10. RESERVED FOR FUTURE USE (Cont'd)

(D)

(D)

ACCESS SERVICE

10. <u>RESERVED FOR FUTURE USE</u> (Cont'd)

(D)

(D)

ACCESS SERVICE

10. RESERVED FOR FUTURE USE (Cont'd)

(D)

(D)

ACCESS SERVICE

10. RESERVED FOR FUTURE USE (Cont'd)

(D)

(D)

ACCESS SERVICE

10. RESERVED FOR FUTURE USE (Cont'd)

(D)

(D)

ACCESS SERVICE

10. RESERVED FOR FUTURE USE (Cont'd)

(D)

(D)

ACCESS SERVICE

10. RESERVED FOR FUTURE USE (Cont'd)

(D)

(D)

ACCESS SERVICE

10. RESERVED FOR FUTURE USE (Cont'd)

(D)

(D)

ACCESS SERVICE

10. RESERVED FOR FUTURE USE (Cont'd)

(D)

(D)

11. ACCESS SERVICE INTERFACES AND TRANSMISSION SPECIFICATIONS

Section 11 contains Switched Access Service Options (which are comprised of Interface Groups, Supervisory Signaling, Entry Switch Receive Level and Local Transport Termination) and Transmission Specifications. (C)

11.1 Switched Access Service

Ten Interface Groups are provided for terminating the Local Transport Entrance Facility at the customer's designated premises. Each Interface Group provides a specified premises interface (e.g., two-wire, four-wire, DS1, etc.). Where transmission facilities permit, and at the option of the customer, the Entrance Facility may be provided with optional features as set forth in 11.1.1 following.

As a result of the customer's access order and the type of Telephone Company transport facilities serving the customer designated premises, the need for signaling conversions or two-wire to four- wire conversions, or the need to terminate digital or high frequency facilities in channel bank equipment may require that Telephone Company equipment be placed at the customer designated premises. For example, if a voice frequency interface is ordered by the customer and the Telephone Company facilities serving the customer designated premises are digital, then Telephone Company channel bank equipment must be placed at the customer designated premises in order to provide the voice frequency interface ordered by the customer.

11.1.1 Local Transport Interface Groups

Interface Groups are combinations of technical parameters which describe the Telephone Company handoff at the point of termination at the customer designated premises. The technical specifications concerning the available interface groups are set forth in 11.1.1.A through 11.1.1.D following.

ACCESS SERVICE

11. ACCESS SERVICE INTERFACES AND TRANSMISSION SPECIFICATIONS (Cont'd)

11.1 Switched Access Service (Cont'd)

11.1.1 Local Transport Interface Groups (Cont'd)

Interface Group 1 is provided with Type C Transmission Specifications, as set forth in 11.1.2.C following, and Interface Groups 2 through 10 are provided with Type A or B Transmission Specifications, as set forth respectively in 11.1.2.E and 11.1.2.F following, depending on the Feature Group and whether the Access Service is routed directly or through an access tandem. All Interface Groups are provided with Data Transmission Parameters.

Only certain premises interfaces are available at the customer designated premises. The premises interfaces associated with the Interface Groups may vary among Feature Groups.

11.1.1.A Interface Group 1

Interface Group 1, except as set forth in the following, provides two-wire voice frequency transmission at the point of termination at the customer designated premises. The interface is capable of transmission of voice and associated telephone signals within the frequency bandwidth of approximately 300 to 3000 Hz.

Interface Group 1 is not provided in association with FGC and FGD when the first point of switching is an access tandem. In addition, Interface Group 1 is not provided in association with FGB, FGC or FGD when the first point of switching provides only four-wire terminations.

ACCESS SERVICE

11. ACCESS SERVICE INTERFACES AND TRANSMISSION SPECIFICATIONS (Cont'd)

11.1 Switched Access Service (Cont'd)

11.1.1 Local Transport Interface Groups (Cont'd)

11.1.1.A Interface Group 1 (Cont'd)

The transmission path between the point of termination at the customer designated premises and the customer's serving wire center may be comprised of any form or configuration of plant capable of and typically used in the telecommunications industry for the transmission of voice and associated telephone signals within the frequency bandwidth of 300 to 3000 Hz.

The interface is provided with loop supervisory signaling. When the interface is associated with FGA, such signaling will be loop start or ground start signaling. When the interface is associated with FGC or FGD, such signaling, except for two-way calling which is E&M signaling, will be reverse battery signaling.

11.1.1.B Interface Group 2

Interface Group 2 provides four-wire voice frequency transmission at the point of termination at the customer designated premises. The interface is capable of transmission of voice and associated telephone signals within the frequency bandwidth of approximately 300 to 3000 Hz.

The transmission path between the point of termination at the customer designated premises and the customer's serving wire center may be comprised of any form or configuration of plant capable of and typically used in the telecommunications industry for the transmission of voice and associated telephone signals within the frequency bandwidth of approximately 300 to 3000 Hz.

ACCESS SERVICE

11. ACCESS SERVICE INTERFACES AND TRANSMISSION SPECIFICATIONS (Cont'd)

11.1 Switched Access Service (Cont'd)

11.1.1 Local Transport Interface Groups (Cont'd)

11.1.1.B Interface Group 2 (Cont'd)

The interface is provided with loop supervisory signaling. When the interface is associated with FGA, such signaling will be loop start or ground start signaling. When the interface is associated with FGC or FGD, such signaling, except for two-way calling which is E&M signaling, will be reverse battery signaling.

11.1.1.C Interface Groups 3 through 5

Interface Groups 3 through 5 provide analog transmission at the point of termination at the customer designated premises. The various interfaces are capable of transmitting electrical signals at the frequencies illustrated following, with the capability to channelize voice frequency transmission paths. Certain frequencies within the bandwidth of the Interface Groups are reserved for Telephone Company use, e.g., pilot and carrier group alarm tones. Before the first point of switching, the Telephone Company will provide multiplex equipment to derive the transmission paths of frequency bandwidth of approximately 300 to 3000 Hz.

The interfaces are provided with individual transmission path SF supervisory signaling.

Interface Group Identification No	Transmission Frequency Bandwidth	Analog Hierarchy Level	Maximum No. of Channelized Voice Freq. Trans. Paths
3	60 - 108 kHz	Group	12
4	312 - 552 kHz	Supergroup	60
5	564 - 3084 kHz	Mastergroup	600

ACCESS SERVICE

11. ACCESS SERVICE INTERFACES AND TRANSMISSION SPECIFICATIONS (Cont'd)

11.1 Switched Access Service (Cont'd)

11.1.1 Local Transport Interface Groups (Cont'd)

11.1.1.D Interface Groups 6 through 10

Interface Groups 6 through 10 provide digital transmission at the point of termination at the customer designated premises. The various interfaces are capable of transmitting electrical signals at the nominal bit rates illustrated following, with the capability to channelize voice frequency transmission paths. Before the first point of switching, when analog switching utilizing analog terminations is provided, the Telephone Company will provide multiplex and channel bank equipment to derive transmission paths of a frequency bandwidth of approximately 300 to 3000 Hz. When digital switching or analog switching with digital carrier terminations is provided, the Telephone Company will provide, a DS1 signal(s) in D3/D4 format.

The interfaces are provided with individual transmission path bit stream supervisory signaling.

Interface Group Identification No.	Nominal Bit Rate (Mbps)	Digital Hierarchy Level	Max. No. of Channelized Voice Freq. Trans. Paths
6	1.544	DS1	24
7	3.152	DS1C	48
8	6.312	DS2	96
9	44.736	DS3	672
10	274.176	DS4	4032

ACCESS SERVICE

11. ACCESS SERVICE INTERFACES AND TRANSMISSION SPECIFICATIONS (Cont'd)

11.1 Switched Access Service (Cont'd)

11.1.1 Local Transport Interface Groups (Cont'd)

11.1.1.E Local Transport Optional Features

Where transmission facilities permit, the Telephone Company will, at the option of the customer, provide the following features in association with Local Transport. An Access Order Charge as specified in 12.1 following is applicable on a per order basis when nonchargeable optional features are added subsequent to the installation of service (with the exception of the addition of 64 Clear Channel Capability to an existing service).

When the 64 Clear Channel Capability optional feature is installed on an existing facility, the addition will be treated as a discontinuance and start of service and all associated nonrecurring charges will apply.

- Customer Specified Entry Switch Receive Level

  Customer Specified Entry Switch Receive Level allows the customer to specify the receive transmission level at the first point of switching. The range of transmission levels which may be specified is described in Technical Reference GR-334-CORE. This feature is available with Interface Groups 2 through 10 for Feature Groups A and B.

- Customer Specification of Local Transport Termination

  Customer Specification of Local Transport Termination allows the customer to specify, for Feature Group B routed directly to an end office or access tandem, a four-wire termination of the Local Transport at the first point of switching in lieu of a Telephone Company selected two-wire termination. This option is available only when the Feature Group B arrangement is provided with Type B Transmission Specifications.

- Supervisory Signaling

  Supervisory Signaling allows the customer to order an optional supervisory signaling arrangement for each transmission path provided where the transmission parameters permit, and where signaling conversion is required by the customer to meet its signaling capability.

11. ACCESS SERVICE INTERFACES AND TRANSMISSION SPECIFICATIONS (Cont'd)

11.1 Switched Access Service (Cont'd)

11.1.1 Local Transport Interface Groups (Cont'd)

11.1.1.E Local Transport Optional Features (Cont'd)

- 64 Clear Channel Capability

64 Clear Channel Capability allows the customer to transport voice or data signals over a 64 Kbps channel with no constraints on the quantity or sequence of ones and zero bits. This option employs the Bipolar 8 Zero Suppression (B8ZS) technique to permit customers to use the full 64 Kpbs bandwidth of a DS0 channel. It is only available in suitably equipped electronic end offices as identified in NATIONAL EXCHANGE CARRIER ASSOCIATION, INC. TARIFF NO. 4. 64 Clear Channel Capability, as described in Technical Reference GR-334-CORE, is available with Interface Groups 6 and 9 for Feature Groups C and D with Signaling System 7 (SS7) signaling.

The Interface Groups, as described in 11.1.1.A through 11.1.1.D preceding, represent industry standard arrangements. Where transmission parameters permit, the customer may select the following optional signaling arrangements in place of the signaling arrangements standardly associated with the Interface Groups.

For Interface Groups 1 and 2 associated with FGC or FGD

Supervisory Signaling, (C)
E&M Type I Supervisory Signaling,
E&M Type II Supervisory Signaling, or
E&M Type III Supervisory Signaling

For Interface Group 2 associated with FGB, FGC or FGD and in addition to the preceding

SF Supervisory Signaling, or
Tandem Supervisory Signaling

For Interface Groups 3 through 5

Optional Supervisory Signaling Not Available

For Interface Groups 6 through 10

These Interface Groups may, at the option of the customer, be provided with individual transmission path SF supervisory signaling where such signaling is available in Telephone Company central offices. Generally such signaling is available only where the first point of switching provides an analog (i.e., non-digital) interface to the transport termination.

11. ACCESS SERVICE INTERFACES AND TRANSMISSION SPECIFICATIONS (Cont'd)

11.1 Switched Access Service (Cont'd)

11.1.1 Local Transport Interface Groups (Cont'd)

11.1.1.E Local Transport Optional Features (Cont'd)

These optional Supervisory Signaling arrangements not available in combination with the SS7 optional feature as described in 6.8.2.C(2) preceeding.

Additionally, in 11.1.1.F following, there is a matrix of available Premises Interface Codes as a function of Interface Group, Telephone Company

Switch Supervisory Signaling and Feature Group.

11.1.1.F Available Premises Interface Codes

Applicable premises interface codes which are available for each Interface Group are described in Technical Reference GR-334-CORE. Their availability is a function of the Telephone Company switch supervisory signaling and Feature Group. (C)

(D)

(D)

11. ACCESS SERVICE INTERFACES AND TRANSMISSION SPECIFICATIONS (Cont'd)

11.1 Switched Access Service (Cont'd)

11.1.1 Local Transport Interface Groups (Cont'd)

11.1.1.F Available Premises Interface Codes (Cont'd) (D)

(D)

11. ACCESS SERVICE INTERFACES AND TRANSMISSION SPECIFICATIONS (Cont'd)

11.1 Switched Access Service (Cont'd)

11.1.1 Local Transport Interface Groups (Cont'd)

11.1.1.F Available Premises Interface Codes (Cont'd) (D)

(D)

11. ACCESS SERVICE INTERFACES AND TRANSMISSION SPECIFICATIONS (Cont'd)

11.1 Switched Access Service (Cont'd)

11.1.2 Standard Transmission Specifications

Descriptions of the transmission specifications available with each Feature Group as a function of the Interface Group selected by the customer, are set forth in 11.1.2.A through 11.1.2.D following. Descriptions of each of these Standard Transmission Specifications and the two Data Transmission Parameters mentioned are set forth respectively in 11.1.2.E through 11.1.2.G and 11.1.3.A and 11.1.3.B following:

11.1.2.A Feature Group A

FGA is provided with either Type B or Type C Transmission Specifications. The specifications for the associated parameters are guaranteed to the first point of switching. Type C Transmission Specifications are provided with Interface Group 1 and Type B is provided with Interface Groups 2 through 10. Data stream data transmission parameters are provided with FGA to the first point of switching. (C)

11.1.2.B Feature Group B

FGB is provided with either Type B or Type C Transmission Specifications. The specifications for the associated parameters are guaranteed to the end office when routed directly or to the first point of switching when routed via an access tandem. Type C Transmission Specifications are provided with Interface Group 1 and Type B is provided with Interface Groups 2 through 10. Data stream data transmission parameters are provided with FGB to the first point of switching. (C)

11. ACCESS SERVICE INTERFACES AND TRANSMISSION SPECIFICATIONS (Cont'd)

11.1 Switched Access Service (Cont'd)

11.1.2 Standard Transmission Specifications (Cont'd)

11.1.2.C Feature Group C

FGC is provided with either Type B or Type C Transmission Specifications as follows:

- When routed directly to the end office either Type B or Type C is provided.
- When routed to an access tandem only Type B is provided.
- Type B or Type C is provided on the transmission path from the access tandem to the end office.

Type C Transmission Specifications are provided with Interface Group 1 when routed directly to an end office. Type B is provided with Interface Groups 2 through 10, whether routed directly to an end office or to an access tandem.

Data stream data transmission parameters are provided with FGC for the transmission path between the customer designated premises and the end office when directly routed to the end office, and between the customer designated premises and the access tandem and between the access tandem and the end office when routed via an access tandem. (C)

11. ACCESS SERVICE INTERFACES AND TRANSMISSION SPECIFICATIONS (Cont'd)

11.1 Switched Access Service (Cont'd)

11.1.2 Standard Transmission Specifications (Cont'd)

11.1.2.D Feature Group D

FGD is provided with either Type A, Type B or Type C Transmission Specifications as follows:

- When routed to the end office either Type B or C is provided.
- When routed to an access tandem only Type A is provided.
- Type A is provided on the transmission path from the access tandem to the end office.

Type C Transmission Specifications are provided with Interface Group 1. Type A and Type B Transmission Specifications are provided with Interface Groups 2 through 10.

Data stream data transmission parameters are provided with FGD for the transmission path between the customers designated premises and the end office when directly routed to the end office. Data stream data transmission parameters are provided for the transmission path between the customer designated premises and the access tandem and between the access tandem and the end office when routed via an access tandem. (C)

11.1.2.E Type A Transmission Specifications

Type A Transmission Specifications is provided with the following parameters:

11.1.2.E(1) Loss Deviation

The maximum Loss Deviation of the 1004 Hz loss relative to the Expected Measured Loss(EML) is □□2.0 dB.

ACCESS SERVICE

11. ACCESS SERVICE INTERFACES AND TRANSMISSION SPECIFICATIONS (Cont'd)

11.1 Switched Access Service (Cont'd)

11.1.2 Standard Transmission Specifications (Cont'd)

11.1.2.E Type A Transmission Specifications (Cont'd)

11.1.2.E(2) Attenuation Distortion

The maximum Attenuation Distortion in the 404 to 2804 Hz frequency band relative to the loss at 1004 Hz is -1.0 dB to +3.0 dB.

11.1.2.E(3) C-Message Noise

The maximum C-Message Noise for the transmission path at the route miles listed is less than or equal to:

Route Miles	C-Message Noise
less than 50	32 dBrnCO
51 to 100	34 dBrnCO
101 to 200	37 dBrnCO
201 to 400	40 dBrnCO
401 to 1000	42 dBrnCO

11.1.2.E(4) C-Notch Noise

The maximum C-Notch Noise, utilizing a -16 dBmO holding tone, is less than or equal to 45 dBrnCO.

ACCESS SERVICE

11. ACCESS SERVICE INTERFACES AND TRANSMISSION SPECIFICATIONS (Cont'd)

11.1 Switched Access Service (Cont'd)

11.1.2 Standard Transmission Specifications (Cont'd)

11.1.2.E Type A Transmission Specifications (Cont'd)

11.1.2.E(5) Echo Control

Echo Control, identified as Equal Level Echo Path Loss, and expressed as Echo Return Loss and Singing Return Loss, is dependent on the routing, i.e., whether the service is routed directly from the customer's point of termination (POT) to the end office or via an access tandem. It is equal to or greater than the following:

	Echo Return Loss	Singing Return Loss
POT to Access Tandem	21 dB	14 dB
POT to End Office		
- Direct	N/A	N/A
- Via Access Tandem	16 dB	11 dB

11.1.2.E(6) Standard Return Loss

Standard Return Loss expressed as Echo Return Loss and Singing Return Loss on two-wire ports of a four-wire point of termination shall be equal to or greater than:

Echo Return Loss	Singing Return Loss
5 dB	2.5 dB

ACCESS SERVICE

11. ACCESS SERVICE INTERFACES AND TRANSMISSION SPECIFICATIONS (Cont'd)

11.1 Switched Access Service (Cont'd)

11.1.2 Standard Transmission Specifications (Cont'd)

11.1.2.F Type B Transmission Specifications

Type B Transmission Specifications are provided with the following parameters:

11.1.2.F(1) Loss Deviation

The maximum Loss Deviation of the 1004 Hz loss relative to the Expected Measured Loss (EML) is ±2.5 dB.

11.1.2.F(2) Attenuation Distortion

The maximum Attenuation Distortion in the 404 to 2804 Hz frequency band relative to loss at 1004 Hz is -2.0 dB to +4.0 dB.

11.1.2.F(3) C-Message Noise

The maximum C-Message Noise for the transmission path at the route miles listed is less than or equal to:

	C-Message Noise*	
Route Miles	Type B1	Type B2
less than 50	32 dBrnCO	35 dBrnCO
51 to 100	33 dBrnCO	37 dBrnCO
101 to 200	35 dBrnCO	40 dBrnCO
201 to 400	37 dBrnCO	43 dBrnCO
401 to 1000	39 dBrnCO	45 dBrnCO

11.1.2.F(4) C-Notch Noise

The maximum C-Notch Noise, utilizing a -16 dBm0 holding tone is less than or equal to 47 dBrnCO.

ACCESS SERVICE

11. ACCESS SERVICE INTERFACES AND TRANSMISSION SPECIFICATIONS (Cont'd)

11.1 Switched Access Service (Cont'd)

11.1.2 Standard Transmission Specifications (Cont'd)

11.1.2.F Type B Transmission Specifications

11.1.2.F(5) Echo Control

Echo Control, identified as Impedance Balance for FGA and FGB and Equal Level Echo Path Loss for FGC and FGD, and expressed as Echo Return Loss (ERL) and Singing Return Loss (SRL), is dependent on the routing, i.e., whether the service is routed directly from the customer's point of termination (POT) to the end office or via an access tandem. The ERL and SRL also differ by Feature Group, type of termination, and type of transmission path. They are greater than or equal to the following:

	Echo Return Loss	Singing Return Loss
POT to Access Tandem		
- Terminated in 4-Wire trunk	21 dB	14 dB
- Terminated in 2-Wire trunk	16 dB	11 dB
POT to End Office		
- Direct	16 dB	11 dB
- Via Access Tandem		
—For FGB access	8 dB	4 dB
—For FGC access (Effective 4-Wire transmission path at end office)	16 dB	11 dB
—For FGC access (Effective 2-Wire transmission path at end office)	13 dB	6 dB

ACCESS SERVICE

11. ACCESS SERVICE INTERFACES AND TRANSMISSION SPECIFICATIONS (Cont'd)

11.1 Switched Access Service (Cont'd)

11.1.2 Standard Transmission Specifications (Cont'd)

11.1.2.F Type B Transmission Specifications

11.1.2.F(6) Standard Return Loss

Standard Return Loss, expressed as Echo Return Loss and Singing Return Loss, on two-wire ports of a four-wire point of termination shall be equal to or greater than:

Echo Return Loss	Singing Return Loss
5 dB	2.5 dB

11.1.2.G Type C Transmission Specifications

Type C Transmission Specifications are provided with the following parameters:

11.1.2.G(1) Loss Deviation

The maximum Loss Deviation of the 1004 Hz loss relative to the Expected Measured Loss (EML) is ± 3.0 dB.

11.1.2.G(2) Attenuation Distortion

The maximum Attenuation Distortion in the 404 to 2804 Hz frequency band relative to loss at 1004 Hz is -2.0 dB to +5.5 dB.

ACCESS SERVICE

11. ACCESS SERVICE INTERFACES AND TRANSMISSION SPECIFICATIONS (Cont'd)

11.1 Switched Access Service (Cont'd)

11.1.2 Standard Transmission Specifications (Cont'd)

11.1.2.G Type C Transmission Specifications (Cont'd)

11.1.2.G(3) C-Message Noise

The maximum C-Message Noise for the transmission path at the route miles listed is less than or equal to:

	C-Message Noise	
Route Miles	Type C1	Type C2
less than 50	32 dBrnCO	38 dBrnCO
51 to 100	33 dBrnCO	39 dBrnCO
101 to 200	35 dBrnCO	41 dBrnCO
201 to 400	37 dBrnCO	43 dBrnCO
401 to 1000	39 dBrnCO	45 dBrnCO

11.1.2.G(4) C-Notch Noise

The maximum C-Notch Noise, utilizing a -16 dBm0 holding tone is less than or equal to 47 dBrnCO.

* For Feature Groups C and D only Type C2 will be provided. For Feature Groups A and B, Type C1 or C2 will be provided as set forth in Technical Reference GR-334-CORE.

11. ACCESS SERVICE INTERFACES AND TRANSMISSION SPECIFICATIONS (Cont'd)

11.1 Switched Access Service (Cont'd)

11.1.2 Standard Transmission Specifications (Cont'd)

11.1.2.G Type C Transmission Specifications (Cont'd)

11.1.2.G(5) Echo Control

Echo Control, identified as Return Loss and expressed as Echo Return Loss and Singing Return Loss is dependent on the routing, i.e., whether the service is routed directly from the customer's point of termination (POT) to the end office or via an access tandem. It is equal to or greater than the following:

	Echo Return Loss	Singing Return Loss
POT to Access Tandem	13 dB	6 dB
POT to End Office		
- Direct	13 dB	6 dB
- Via Access Tandem (for FGB only)	8 dB	4 dB

11.1.3 Data Transmission Parameters

Two types of Data Transmission Parameters are provided for the Feature Group arrangements. Data stream in VF at the customer's point of termination is provided with Feature Groups A, B and C and also with Feature Group D when Feature Group D is directly routed to the end office. Data stream in VF at the customer's point of termination is only provided with Feature Group D and only when routed via an access tandem. Following are descriptions of each. (C)

11.1.3.A Data Transmission Parameters Type DA

11.1.3.A(1) Signal to C-Notched Noise Ratio

The Signal to C-Notched Noise Ratio is equal to or greater than 33 dB.

ACCESS SERVICE

11. ACCESS SERVICE INTERFACES AND TRANSMISSION SPECIFICATIONS (Cont'd)

11.1 Switched Access Service (Cont'd)

11.1.3 Data Transmission Parameters (Cont'd)

11.1.3.A Data Transmission Parameters Type DA

11.1.3.A(2) Envelope Delay Distortion

The maximum Envelope Delay Distortion for the frequency bands and route miles specified is:

604 to 2804 Hz

less than 50 route miles	500 microseconds
equal to or greater than 50 route miles	900 microseconds

1004 to 2404 Hz

less than 50 route miles	200 microseconds
equal to or greater than 50 route miles	400 microseconds

11.1.3.A(3) Impulse Noise Counts

The Impulse Noise Counts exceeding a 65 dBrnCO threshold in 15 minutes is no more than 15 counts.

11.1.3.A(4) Intermodulation Distortion

The Second Order (R2) and Third Order (R3) Intermodulation Distortion products are equal to or greater than:

Second Order (R2)	33 dB
Third Order (R3)	37 dB

ACCESS SERVICE

11. ACCESS SERVICE INTERFACES AND TRANSMISSION SPECIFICATIONS (Cont'd)

11.1 Switched Access Service (Cont'd)

11.1.3 Data Transmission Parameters (Cont'd)

11.1.3.A Data Transmission Parameters Type DA

11.1.3.A(5) Phase Jitter

The Phase Jitter over the 4-300 Hz frequency band is less than or equal to 5° peak-to-peak.

11.1.3.A(6) Frequency Shift

The maximum Frequency Shift does not exceed -2 to +2 Hz.

11.1.3.B Data Transmission Parameters Type DB

11.1.3.B(1) Signal to C-Notched Noise Ratio

The Signal to C-Notched Noise Ratio is equal to or greater than 30 dB.

11.1.3.B(2) Envelope Delay Distortion

The maximum Envelope Delay Distortion for the frequency bands and route miles specified is:

604 to 2804 Hz

less than 50 route miles	800 microseconds
equal to or greater than 50 route miles	1000 microseconds

1004 to 2404 Hz

less than 50 route miles	320 microseconds
equal to or greater than 50 route miles	500 microseconds

ACCESS SERVICE

11. ACCESS SERVICE INTERFACES AND TRANSMISSION SPECIFICATIONS (Cont'd)

11.1 Switched Access Service (Cont'd)

11.1.3 Data Transmission Parameters (Cont'd)

11.1.3.B Data Transmission Parameters Type DB (Cont'd)

11.1.3.B(3) Impulse Noise Counts

The Impulse Noise Counts exceeding a 67 dBrnCO threshold in 15 minutes is no more than 15 counts.

11.1.3.B(4) Intermodulation Distortion

The Second Order (R2) and Third Order (R3) Intermodulation Distortion products are equal to or greater than:

Second Order (R2)	31 dB
Third Order (R3)	34 dB

11.1.3.B (5) Phase Jitter

The Phase Jitter over the 4-300 Hz frequency band is less than or equal to 7° peak-to-peak.

11.1.3.B (6) Frequency Shift

The maximum Frequency Shift does not exceed -2 to +2 Hz.

11. ACCESS SERVICE INTERFACES AND TRANSMISSION SPECIFICATIONS (Cont'd)

11.2 Special Access Service

This section lists the applicable technical references inclusive of the codes that the customer must specify when ordering Special Access Service, Switched Access Entrance Facilities, and Voice Grade and High Capacity Direct Trunked Transport. These codes provide a standardized means to relate the services being ordered to Special Access Service offerings contained in Section 9 preceding.

When ordering, the type of Special Access Service or Switched Access Entrance Facility or Direct Trunked Transport is described by two code sets, the Network Channel code and the Network Channel Interface codes.

The Network Channel code consists of two elements. Element one is a Channel Service Code (character positions 1 and 2) that describes the channel service type in an abbreviated form. Element two is an Optional Feature Code (character positions 3 and 4) that identifies option codes available for each channel service code, such as C-conditioning or Improved Return Loss.

The Network Channel Interface is used to identify interface specifications associated with a particular channel. This code describes the total wires, protocol, impedance, protocol options and transmission level point(s) reflecting physical and electrical characteristics between the Telephone Company and the customer.

Common language codes including Network Channel and Network Channel Interface codes are trademarks of Telcordia Technologies, Inc. and comprehensive lists of allowed Network Channel and Network Channel Interface codes can be obtained from Telcordia Technologies, Inc. However, not all services contained in this Special Report may be offered by the Telephone Company at this time. (T)

(D)

(D)

11. ACCESS SERVICE INTERFACES AND TRANSMISSION SPECIFICATIONS (Cont'd)

11.2 Special Access Service (Cont'd)

(D)

(D)

11. ACCESS SERVICE INTERFACES AND TRANSMISSION SPECIFICATIONS (Cont'd)

11.2 Special Access Service (Cont'd)

(D)

(D)

11. ACCESS SERVICE INTERFACES AND TRANSMISSION SPECIFICATIONS (Cont'd)

11.2 Special Access Service (Cont'd)

11.2.1 Network Channel Codes (T)

In order to determine the Network Channel code appropriate for the service to be ordered, the type of Special Access Service the customer wishes must be identified. This identification is accomplished by a Service Designator code. The broad categories of Service Designator codes are set forth in Section 9 preceding. Variations within service type are described in the various Technical Publications cited in 11.2.1.A through 11.2.1.H following.

Having determined the specific service type to be ordered and its Service Designator code, and having used the appropriate Technical Publication, the customer should match the Service Designator code to the Network Channel code using the appropriate technical reference. Once the Network Channel code has been determined, the Network Channel Interface code may be developed using the information set forth in the specified technical reference.

11.2.1.A Technical Specifications Packages Metallic Service

(T)

Technical Specifications Packages are set forth in Technical Publication TR-NPL-000336 and a comprehensive list of Network Channel Interface codes can be obtained from Telcordia Technologies Inc.

(D)

11. ACCESS SERVICE INTERFACES AND TRANSMISSION SPECIFICATIONS (Cont'd)

11.2 Special Access Service (Cont'd)

11.2.1 Network Channel Codes (Cont'd) (T)

11.2.1.B Technical Specifications Packages Telegraph Grade Service

Technical Specifications Packages are set forth in Technical Publication TR-NPL-000336 and a comprehensive list of Network Channel Interface codes can be obtained from Telcordia Technologies, Inc. (T)

(D)

(D)

11. ACCESS SERVICE INTERFACES AND TRANSMISSION SPECIFICATIONS (Cont'd)

11.2 Special Access Service (Cont'd)

11.2.1 Network Channel Codes (Cont'd) (T)

11.2.1.C Technical Specifications Packages Voice Grade Service

Technical Specifications Packages are set forth in Technical Publication TR-NPL-000336 and a comprehensive list of Network Channel Interface codes can be obtained from Telcordia Technologies, Inc. (T)

(D)

(D)

11. ACCESS SERVICE INTERFACES AND TRANSMISSION SPECIFICATIONS (Cont'd)

11.2 Special Access Service (Cont'd)

11.2.1 Network Channel Codes (Cont'd) (T)

11.2.1.C Technical Specifications Packages Voice Grade Service (Cont'd)

(D)

(D)

11. ACCESS SERVICE INTERFACES AND TRANSMISSION SPECIFICATIONS (Cont'd)

11.2 Special Access Service (Cont'd)

11.2.1 Network Channel Codes (Cont'd) (T)

11.2.1.D Technical Specifications Packages Program Audio Service

Technical Specifications Packages are set forth in Technical Publication TR-NPL-000336 and a comprehensive list of Network Channel Interface codes can be obtained from Telcordia Technologies, Inc. (T)

(D)

(D)

11. ACCESS SERVICE INTERFACES AND TRANSMISSION SPECIFICATIONS (Cont'd)

11.2 Special Access Service (Cont'd)

11.2.1 Network Channel Codes (Cont'd) (T)

11.2.1.E Technical Specifications Packages Video Service

Technical Specifications Packages are set forth in Technical Publication TR-NPL-000336 and a comprehensive list of Network Channel Interface codes can be obtained from Telcordia Technologies, Inc. (T)

(D)

(D)

11. ACCESS SERVICE INTERFACES AND TRANSMISSION SPECIFICATIONS (Cont'd)

11.2 Special Access Service (Cont'd)

11.2.1 Network Channel Codes (Cont'd) (T)

11.2.1.E Technical Specifications Packages Video Service (Cont'd)

(D)

(D)

11. ACCESS SERVICE INTERFACES AND TRANSMISSION SPECIFICATIONS (Cont'd)

11.2 Special Access Service (Cont'd)

11.2.1 Network Channel Codes (Cont'd) (T)

11.2.1.F Technical Specifications Packages Digital Data Service

Technical Specifications Packages are set forth in Technical Publication TR-NPL-000336 and a comprehensive list of Network Channel Interface codes can be obtained from Telcordia Technologies, Inc. (T)

(D)

(D)

11. ACCESS SERVICE INTERFACES AND TRANSMISSION SPECIFICATIONS (Cont'd)

11.2 Special Access Service (Cont'd)

11.2.1 Network Channel Codes (Cont'd) (T)

11.2.1.G Technical Specifications Packages High Capacity Service

Technical Specifications Packages are set forth in Technical Publication TR-NPL-000336 and a comprehensive list of Network Channel Interface codes can be obtained from Telcordia Technologies, Inc. (T)

(D)

(D)

11. ACCESS SERVICE INTERFACES AND TRANSMISSION SPECIFICATIONS (Cont'd)

11.2 Special Access Service (Cont'd)

11.2.1 Network Channel Codes (Cont'd) (T)

11.2.1.H Technical Specifications Packages Synchronous Optical Channel Service

Technical Specifications Packages are set forth in Technical Publication TR-NPL-000336 and a comprehensive list of Network Channel Interface codes can be obtained from Telcordia Technologies, Inc. (T)

(D)

(D)

11. ACCESS SERVICE INTERFACES AND TRANSMISSION SPECIFICATIONS (Cont'd)

11.2 Special Access Service (Cont'd)

11.2.2 Network Channel Interface Codes

The electrical interface with the Telephone Company for Special Access Services, is defined by an interface code. There are interface codes for both the customer designated premises and the point of termination. A comprehensive list of specific Network Channel Interface codes can be obtained from Telcordia Technologies, Inc. (T)

11. ACCESS SERVICE INTERFACES AND TRANSMISSION SPECIFICATIONS (Cont'd)

11.2 Special Access Service (Cont'd)

11.2.2 Network Channel Interface Codes (Cont'd) (T)

(D)

(D)

11. ACCESS SERVICE INTERFACES AND TRANSMISSION SPECIFICATIONS (Cont'd)

11.2 Special Access Service (Cont'd)

11.2.2 Network Channel Interface Codes (Cont'd) (T)

(D)

(D)

11. ACCESS SERVICE INTERFACES AND TRANSMISSION SPECIFICATIONS (Cont'd)

11.2 Special Access Service (Cont'd)

11.2.2 Network Channel Interface Codes (Cont'd) (T)

(D)

(D)

ACCESS SERVICE

11. ACCESS SERVICE INTERFACES AND TRANSMISSION SPECIFICATIONS (Cont'd)

11.2 Special Access Service (Cont'd)

11.2.2 Network Channel Interface Codes (Cont'd) (T)

(D)

(D)

11. ACCESS SERVICE INTERFACES AND TRANSMISSION SPECIFICATIONS (Cont'd)

11.2 Special Access Service (Cont'd)

11.2.2 Network Channel Interface Codes (Cont'd) (T)

(D)

(D)

11. ACCESS SERVICE INTERFACES AND TRANSMISSION SPECIFICATIONS (Cont'd)

11.2 Special Access Service (Cont'd)

11.2.2 Network Channel Interface Codes (Cont'd) (T)

(D)

(D)

ACCESS SERVICE

11. ACCESS SERVICE INTERFACES AND TRANSMISSION SPECIFICATIONS (Cont'd)

11.2 Special Access Service (Cont'd)

11.2.2 Network Channel Interface Codes (Cont'd) (T)

(D)

(D)

11. ACCESS SERVICE INTERFACES AND TRANSMISSION SPECIFICATIONS (Cont'd)

11.2 Special Access Service (Cont'd)

11.2.2 Network Channel Interface Codes (Cont'd) (T)

(D)

(D)

ACCESS SERVICE

11. ACCESS SERVICE INTERFACES AND TRANSMISSION SPECIFICATIONS (Cont'd)

11.2 Special Access Service (Cont'd)

11.2.2 Network Channel Interface Codes (Cont'd) (T)

(D)

(D)

11. ACCESS SERVICE INTERFACES AND TRANSMISSION SPECIFICATIONS (Cont'd)

11.2 Special Access Service (Cont'd)

11.2.2 Network Channel Interface Codes (Cont'd) (T)

(D)

(D)

11. ACCESS SERVICE INTERFACES AND TRANSMISSION SPECIFICATIONS (Cont'd)

11.2 Special Access Service (Cont'd)

11.2.2 Network Channel Interface Codes (Cont'd) (T)

(D)

(D)

11. ACCESS SERVICE INTERFACES AND TRANSMISSION SPECIFICATIONS (Cont'd)

11.2 Special Access Service (Cont'd)

11.2.2 Network Channel Interface Codes (Cont'd) (T)

(D)

(D)

11. ACCESS SERVICE INTERFACES AND TRANSMISSION SPECIFICATIONS (Cont'd)

11.2 Special Access Service (Cont'd)

11.2.2 Network Channel Interface Codes (Cont'd) (T)

(D)

(D)

11. ACCESS SERVICE INTERFACES AND TRANSMISSION SPECIFICATIONS (Cont'd)

11.2 Special Access Service (Cont'd)

11.2.2 Network Channel Interface Codes (Cont'd) (T)

(D)

(D)

11. ACCESS SERVICE INTERFACES AND TRANSMISSION SPECIFICATIONS (Cont'd)

11.2 Special Access Service (Cont'd)

11.2.2 Network Channel Interface Codes (Cont'd) (T)

(D)

(D)

11. ACCESS SERVICE INTERFACES AND TRANSMISSION SPECIFICATIONS (Cont'd)

11.2 Special Access Service (Cont'd)

11.2.2 Network Channel Interface Codes (Cont'd) (T)

(D)

(D)

11. ACCESS SERVICE INTERFACES AND TRANSMISSION SPECIFICATIONS (Cont'd)

11.2 Special Access Service (Cont'd)

11.2.2 Network Channel Interface Codes (Cont'd) (T)

(D)

(D)

11. ACCESS SERVICE INTERFACES AND TRANSMISSION SPECIFICATIONS (Cont'd)

11.2 Special Access Service (Cont'd)

11.2.2 Network Channel Interface Codes (Cont'd) (T)

(D)

(D)

ACCESS SERVICE

11. ACCESS SERVICE INTERFACES AND TRANSMISSION SPECIFICATIONS (Cont'd)

11.2 Special Access Service (Cont'd)

11.2.2 Network Channel Interface Codes (Cont'd) (T)

(D)

(D)

11. ACCESS SERVICE INTERFACES AND TRANSMISSION SPECIFICATIONS (Cont'd)

11.2 Special Access Service (Cont'd)

11.2.2 Network Channel Interface Codes (Cont'd) (T)

(D)

(D)

11. ACCESS SERVICE INTERFACES AND TRANSMISSION SPECIFICATIONS (Cont'd)

11.3 Directory Access Service

11.3.1 Interface Group and Premise Interface Codes

When Directory Access Service is combined with Feature Group C or D Switched Access Service, the Premises Interface Code for the combination will be the available Premises Interface Code provided for the Feature Group C or D Switched Access Service ordered by the customer. (C)

When Directory Access Service is provided as a separate trunk group (not in combination with Switched Access Service) Interface Groups 2 through 10 as set forth in 11.1.1 preceding are available.

(D)

(D)

ACCESS SERVICE

11. ACCESS SERVICE INTERFACES AND TRANSMISSION SPECIFICATIONS (Cont'd)

11.3 Directory Access Service (Cont'd)

11.3.2 Standard Transmission Specifications

Following is a matrix illustrating the transmission specifications available with Directory Access Service. Descriptions of the Standard Transmission Specifications, Type A and B, are set forth respectively in 11.1.2.E and 11.1.2.F preceding.

	Transmission Specifications	
	Type A	**Type B**
Directory Access Service Provided in Combination with Switched Access Service		
▪ Feature Group B (Interface Groups 2 through 10)		X
▪ Feature Group C		X
▪ Feature Group D	X	
Directory Access Service Not Combined with Switched Access Service		
▪ Routed Direct to DA location (Interface Groups 2 through 10)		X
▪ Routed via an access tandem (Interface Groups 2 through 10)	X	

ACCESS SERVICE

12. RATES AND CHARGES

12.1 Access Ordering

		Maximum Charge	
12.1.1	Access Order Charge Per Order	$130.00	(N)
12.1.2	Service Date Change Charge*		
	A Service Date Change Charge will apply, on a per order per occurrence basis, for each service date changed. The applicable charge is:		
	Service Date Change Charge, per order	$ 50.00	(N)
12.1.3	Design Change Charge*		
	The Design Change Charge will apply on a per order per occurrence basis, for each order requiring design change. The applicable charge is:		
	Design Change Charge, per order	$ 50.00	(N)
12.1.4	Expedited Order Charge	$650.00	(N)
12.1.5	Cancellation Charge	$ 42.50	(N)
12.1.6	Miscellaneous Service Order Charge		
	Per Occurrence	$ 50.00	(N)

* Additional labor charges may apply for engineering installation, repair, testing and maintenance. The respective hourly charges are based on the company's current labor rates.

ACCESS SERVICE

12. RATES AND CHARGES (Cont'd)

12.2 Switched Access Service

		Maximum Rate	
12.2.1 Local Transport			(N)
12.2.1.A	Tandem Switched Transport		(C)
	- Tandem-Switched Transport-Termination Per Access Minute	$0.00031210	(N)
	- Tandem Switched-Facility Per Access Minute Per Mile	$0.00003030	(N)
	- Tandem Switching Per Access Minute Per Mile	$0.00106480	(N)
12.2.1.B	Deleted		(D)
			(D)
12.2.1.C	Network Blocking Per Blocked Call		
	Applies to FGD only	$0.02125000	(N)
			(D)
			(D)

ACCESS SERVICE

12. RATES AND CHARGES (Cont'd)

12.2 Switched Access Service (Cont'd)

12.2.2 End Office

		Maximum Rate	
	Local Switching		(N)
12.2.2.A	Local Switching Per Access Minute	$0.01706460	(T) (N) (D)
12.2.2.B	Deleted		
12.2.2.C	Deleted		(D)
12.2.2.D	Information Surcharge		
	Per 100 Access Minutes	$0.0000000	(D) (R) (D) (D) (D) (D)

ACCESS SERVICE

12. RATES AND CHARGES (Cont'd)

12.2 Switched Access Service (Cont'd)

12.2.2 End Office (Cont'd)

12.2.2.E	Carrier Common Line Access Service	Maximum Rate	(N) (D)
	- Originating rate per minute	$0.020000	(N)
	- Terminating rate per minute	$0.020000	(N) (D) (D)
12.2.2.F	800 Data Base Query		
	Per originating 800 query	$0.00837500	(N)

12.2.3	Nonrecurring Charges	Maximum Rate	(N)
12.2.3.A	Local Transport - Installation Per Line or Trunk	$405.00	(N)
12.2.3.B	Directory Access Installation Charge Per Trunk	$405.00	(N)
12.2.3.C	Interim NXX Translation Per Order	$130.00	(N)
12.2.3.D	FGC and FGD Conversion of Multifrequency Address Signaling to SS7 Signaling or SS7 Signaling to Multifrequency Address Signaling		
	Per 24 Trunks Converted or Fraction thereof on a Per Order Basis	$302.50	(N)

ACCESS SERVICE

12. RATES AND CHARGES (Cont'd)

12.2 Switched Access Service (Cont'd)

12.2.4 Common Channel Signaling Network Connection

12.2.4.A Signaling Network Access Link

	Maximum Rate	Maximum Nonrecurring Charge	
			(N)
			(N)
- Signaling Mileage Facility per mile	$ 7.29		(N)
- Signaling Mileage Termination per Termination	$ 73.15		(N)
- Signaling Entrance Facility Per Facility	$ 94.55 (N)	$220.00	(N)

12.2.4.B STP Port

- per port	$ 568.75		(N)

ACCESS SERVICE

12. RATES AND CHARGES (Cont'd)

12.3 Billing Name and Address

12.3.1 Usage Rates

Billing Name and Address (BNA) Customers will be assessed a per record rate for each BNA record requested. This rate is billed to the Customer on a monthly basis. The BNA per record rate applies regardless of whether the requested telephone number is available in the Telephone Company's information database.

Maximum Per Request Rate	
$0.94	(N)

ACCESS SERVICE

12. RATES AND CHARGES (Cont'd)

12.4 Directory Assistance Service

	Maximum Rate	
12.4.1 Directory Assistance Service	$0.6125	(N)
A Directory Assistance Service Charge applies for each call to Directory Assistance Service.		
12.4.2 Directory Access Service Per Call	$0.0154	(N)
Directory Access Service is made-up of an Interface Group and Directory Transport.		
12.4.3 Credit Allowance for Uncompleted DA Calls		
- Credit per call when Switched Access Service is billed using non-premium per minute rates	$0.0540	(N)
- Credit per call when Feature Group A or B Switched Access Service is billed using premium per minute rates	$0.0540	(N)
- Credit per call when Feature Group C or D Switched Access Service is billed using premium per minute rates	$0.0540	(N)

ACCESS SERVICE

12. RATES AND CHARGES (Cont'd)

12.5 Billing and Collection Services

The applicable charges are set forth following:

		Maximum Monthly Rate	
12.5.1	Recording, per message recorded	$0.0175	(N)
12.5.2	Message Processing (Rating), per message processed	$0.0125	(N)
12.5.3	Message-Billed Processing, per message processed for billing	$0.0763	(N)
12.5.4	Message Billed Inquiry, per message processed for billing	$0.0163	(N)
12.5.5	Message-Billed investigation of bill charges, per message processed for billing	$0.0041	(N)
12.5.6	Message-Billed message investigation, per message processed for billing	$0.0016	(N)
12.5.7	Message-Billed Processing per bill rendered		
	Intrastate Only	$0.4500	(N)
	Interstate and Intrastate	$0.2250	(N)
12.5.8	Data Transmission, per message transmitted or received	$0.0038	(N)
12.5.9	CMDS Sampling, per record processed	$0.0013	(N)

ACCESS SERVICE

12. RATES AND CHARGES (Cont'd)

12.6 Special Access Service

12.6.1 Surcharge for Special Access Service

This tariff does not contemplate a surcharge for Special Access Service.

12.6.2 Metallic Service

		Maximum Monthly Rate	Maximum Nonrecurring Charge	
12.6.2.A	Channel Termination Per Termination	$31.99	$192.50	(N)
12.6.2.B	Channel Mileage			
	Channel Mileage Facility Per Mile	$51.88		(N)
	Channel Mileage Termination Per Termination	$ 3.25		(N)
12.6.2.C	Bridging			
	Three Premises Bridging Per Port	$ 5.94		(N)
	Series Bridging Per Port	$ 5.94		(N)

12. RATES AND CHARGES (Cont'd)

12.6 Special Access Service (Cont'd)

12.6.3 Telegraph Grade Service

	Maximum Monthly Rate		Maximum Nonrecurring Charge		(N)
12.6.3.A Channel Termination Per Termination					
Two-Wire	$31.99	(N)	$192.50	(N)	
Four-Wire	$63.98	(N)	$192.50	(N)	
12.6.3.B Channel Mileage					
Channel Mileage Facility Per Mile	$4.33			(N)	
Channel Mileage Termination Per Termination	$39.09			(N)	
12.6.3.C Telegraph Bridging Per Port					
Two-Wire	$5.94			(N)	
Four-Wire	$5.94			(N)	

12.6.4 Voice Grade Service

	Maximum Monthly Rate		Maximum Nonrecurring Charge		(N)
12.6.4.A Channel Termination Per Termination					
Two-Wire	$54.56	(N)	$292.50	(N)	
Four-Wire	$ 85.33	(N)	$292.50	(N)	
12.6.4.B Channel Mileage					
Channel Mileage Facility Per Mile	$4.33			(N)	
Channel Mileage Termination Per Termination	$39.09			(N)	

12. RATES AND CHARGES (Cont'd)

12.6 Special Access Service (Cont'd)

12.6.4 Voice Grade Service (Cont'd)

12.6.4.C. Optional Features and Functions

12.6.4.C.(1) Bridging

		Maximum Monthly Rate	
(a)	Voice Bridging Per Port		
	Two-Wire	$5.94	(N)
	Four-Wire	$5.94	(N)
(b)	Data Bridging Per Port		
	Two-Wire	$5.94	(N)
	Four-Wire	$5.94	(N)
(c)	Telephoto Bridging Per Port		
	Two-Wire	$5.94	(N)
	Four-Wire	$5.94	(N)
(d)	DATAPHONE Select-A-Station Bridging		
	Sequential Arrangement, Ports Per channel connected		
	Two-Wire	$26.64	(N)
	Four-Wire	$141.33	(N)
	Addressable Arrangement, Ports Per channel connected		
	Two-Wire	$28.53	(N)
	Four-Wire	$145.20	(N)

ACCESS SERVICE

12. RATES AND CHARGES (Cont'd)

12.6 Special Access Service (Cont'd)

12.6.4 Voice Grade Service (Cont'd)

12.6.4.C. Optional Features and Functions (Cont'd)

12.6.4.C.(1) Bridging (Cont'd)

(e) Telemetry and Alarm Bridging

	Maximum Monthly Rate	
Active Bridging Channel Connections Per channel connected		
Split Band	$11.11	(N)
Summation	$ 4.34	(N)
Passive Bridging Channel Connections Per channel connected	$0.30	(N)

12.6.4.C.(2) Conditioning Per Termination

C Type	$20.38	(N)
Improved Attenuation Distortion	None	
Improved Envelope Delay Distortion	None	
Data Capability	$ 4.93	(N)
Telephoto Capability	$10.84	(N)
Sealing Current	None	

12.6.4.C.(3) Improved Return Loss for Effective Two-Wire or Four-Wire Transmission Per Termination

Two Wire	$8.94	(N)
Four-Wire	$8.94	(N)

12.6.4.C.(4) Customer Specified Receive Level per two-wire termination $4.30 (N)

ACCESS SERVICE

12. RATES AND CHARGES (Cont'd)

12.6 Special Access Service (Cont'd)

12.6.4 Voice Grade Service (Cont'd)

	Maximum Monthly Rate	
12.6.4.C. Optional Features and Functions (Cont'd)		
12.6.4.C.(5) Multiplexing Per arrangement Voice to Telegraph Grade	$271.61	(N)
12.6.4.C.(6) Signaling Capability Per termination	$ 14.66	(N)
12.6.4.C.(7) Selective Signaling Arrangement Per arrangement	$ 7.98	(N)
12.6.4.C.(8) Transfer Arrangement (key activated or dial up)		
Per four port arrangement including control channel termination	$ 3.76	(N)
Per five port arrangement including control channel termination	$ 8.56	(N)
12.6.4.C.(9) Public Packet Switching Network (PPSN) Interface Arrangement Per arrangement	ICB	

12.6.5 Program Audio Service

	Maximum Monthly Rate		Maximum Daily Rate		Maximum Nonrecurring Charge Monthly		Maximum Nonrecurring Charge Daily		
12.6.5.A Channel Termination Per Termination									
200 to 3500 Hz	$52.00	(N)	$5.20	(N)	$236.25	(N)	$236.25		(N)
100 to 5000 Hz	$56.03	(N)	$5.60	(N)	$236.25	(N)	$236.25		(N)
50 to 8000 Hz	$56.03	(N)	$5.60	(N)	$236.25	(N)	$236.25		(N)
50 to 15000 Hz	$56.03	(N)	$5.60	(N)	$236.25	(N)	$236.25		(N)

ACCESS SERVICE

12. RATES AND CHARGES (Cont'd)

12.6 Special Access Service (Cont'd)

12.6.5 Program Audio Service (Cont'd)

12.6.5.B Channel Mileage

	Maximum Monthly Rate		Maximum Daily Rate	
12.6.5.B.(1) Channel Mileage Facility Per Mile				(N)
200 to 3500 Hz	$ 4.33	(N)	$0.44	(N)
100 to 5000 Hz	$ 8.64	(N)	$0.86	(N)
50 to 8000 Hz	$12.96	(N)	$1.30	(N)
50 to 15000 Hz	$17.30	(N)	$1.73	(N)
12.6.5.B.(2) Channel Mileage Termination Per Termination				
200 to 3500 Hz	$ 39.09	(N)	$ 3.91	(N)
100 to 5000 Hz	$ 78.18	(N)	$ 7.81	(N)
50 to 8000 Hz	$117.26	(N)	$11.73	(N)
50 to 15000 Hz	$156.35	(N)	$15.64	(N)

12.6.5.C Optional Features and Functions

12.6.5.C.(1) Bridging, Distribution Amplifier Per Port	$23.99	(N)	$2.40	(N)
12.6.5.C.(2) Gain Conditioning per service	$14.04	(N)	$1.40	(N)
12.6.5.C.(3) Stereo per service	$22.80	(N)	$2.28	(N)

12.6.6 Video Service

	Maximum Monthly Rate		Maximum Daily Rate		Maximum Nonrecurring Charge Monthly		Maximum Nonrecurring Charge Daily		
12.6.6.A Channel Termination Per Termination									
TV-1 or 2	$459.59	(N)	$252.78	(N)	$952.50	(N)	$952.50		(N)
4TV-5	$448.39	(N)	$246.61	(N)	$952.50	(N)	$952.50		(N)
6TV-5	$476.45	(N)	$262.05	(N)	$952.50	(N)	$952.50		(N)
TV-15	$494.54	(N)	$272.00	(N)	$952.50	(N)	$952.50		(N)

ACCESS SERVICE

12. RATES AND CHARGES (Cont'd)

12.6 Special Access Service (Cont'd)

12.6.6. Video Service

	Maximum Monthly Rate		Maximum Daily Rate	
12.6.6.B Channel Mileage				(N)
12.6.6.B.(1) Channel Mileage Facility Per Mile				
All	$420.94	(N)	$231.51	(N)
12.6.6.B.(2) Channel Mileage Termination Per Termination				
All	$448.34	(N)	$246.59	(N)

12.6.7 Digital Data Service

	Maximum Monthly Rate		Maximum Daily Rate	
12.6.7.A Channel Termination Per Termination				(N)
2.4 kbps	$98.81	(N)	$276.25	(N)
4.8 kbps	$98.81	(N)	$276.25	(N)
9.6 kbps	$98.81	(N)	$276.25	(N)
56.0 kbps	$98.81	(N)	$276.25	(N)

12.6.7.B Channel Mileage		
12.6.7.B.(1) Channel Mileage Facility Per Mile		
2.4 kbps	$4.33	(N)
4.8 kbps	$4.33	(N)
9.6 kbps	$4.33	(N)
56.0 kbps	$8.64	(N)
12.6.7.B.(2) Channel Mileage Termination Per Termination		
2.4 kbps	$39.09	(N)
4.8 kbps	$39.09	(N)
9.6 kbps	$39.09	(N)
56.0 kbps	$78.18	(N)

ACCESS SERVICE

12. RATES AND CHARGES (Cont'd)

12.6 Special Access Service (Cont'd)

12.6.7 Digital Data Service

	Maximum Monthly Rate	
12.6.7.C Optional Features and Functions		
12.6.7.C.(1) Bridging Per port	$5.94	(N)
12.6.7.C.(2) Loop Transfer Arrangement Per four port arrangement Key activated or Dial-Up	$7.46	(N)
12.6.7.C.(3) Public Packet Switching Network Interface Arrangement		
Per 9.6 kbps arrangement	ICB	
Per 56.0 kbps arrangement	ICB	
12.6.7.D Channel Service Unit Per Termination		
2.4 kbps	$32.38	(N)
4.8 kbps	$32.38	(N)
9.6 kbps	$40.13	(N)
56.0 kbps	$42.68	(N)

12.6.8 High Capacity Service

	Maximum Monthly Rate		Maximum Nonrecurring Charge	
12.6.8.A Channel Termination Per Termination				
1.544 Mbps	$257.49	(N)	$536.25	(N)
3.152 Mbps	ICB		ICB	
6.312 Mbps	ICB		ICB	
44.736 Mbps	ICB		ICB	
274.176 Mbps	ICB		ICB	

12.6.8.B Channel Mileage

12.6.8.B.(1) Channel Mileage Facility Per Mile	Maximum Monthly Rate	
64 kbps	$ 8.64	(N)
1.544 Mbps	$88.18	(N)
3.152 Mbps	ICB	
6.312 Mbps	ICB	
44.736 Mbps	ICB	
274.176 Mbps	ICB	

ACCESS SERVICE

12. RATES AND CHARGES (Cont'd)

12.6 Special Access Service (Cont'd)

12.6.8 High Capacity Service (Cont'd)

12.6.8.B Channel Mileage (Cont'd)

12.6.8.B.(2) Channel Mileage Termination
Per Termination

	Maximum Monthly Rate	
64 kbps	$ 78.18	(N)
1.544 Mbps	$327.03	(N)
3.152 Mbps	ICB	
6.312 Mbps	ICB	
44.736 Mbps	ICB	
274.176 Mbps	ICB	

12.6.8.C Optional Features and Functions

12.6.8.C.(1) Multiplexing, per arrangement

DS4 to DS1	ICB	
DS3 to DS1	$760.46	(N)
DS2 to DS1	ICB	
DS1C to DS1	ICB	
DS1 to Voice	$245.66	(N)
DS1 to DSO	$247.98	(N)
DSO to Subrates		
Up to 20 2.4 kbps services	$377.40	(N)
Up to 10 4.8 kbps services	$231.65	(N)
Up to 5 9.6 kbps services	$202.40	(N)

ACCESS SERVICE

12. RATES AND CHARGES (Cont'd)

12.6 Special Access Service (Cont'd)

12.6.8 High Capacity Service (Cont'd)

		Maximum Monthly Rate	
			(N)
			(N)
			(N)
12.6.8.C.(2)	Automatic Loop Transfer Per arrangement	$486.55	(N)
12.6.8.C.(3)	Transfer Arrangement (key-activated or dial-up) Per four port arrangement including control channel termination	$206.78	(N)
12.6.8.C.(4)	Clear Channel Capability per 1.544 Mbps transmission path	None	
12.6.8.C.(5)	Shared SONET Ring Interoffice Transport per DS3 Channel Mileage Facility	ICB	(N)
12.6.8.D	Network Channel Termination Equipment Per termination		
	1.544 Mbps	$ 97.56	(N)
	Automatic Loop Transfer	$1,120.20	(N)

ACCESS SERVICE

12. RATES AND CHARGES (Cont'd)

12.6 Special Access Service (Cont'd)

12.6.9 Synchronous Optical Channel Service

Regulations concerning Synchronous Optical Channel Service are set forth in 9.11 preceding.

			Maximum Monthly Rate		Maximum Nonrecurring Charge	(N)
12.6.9.A Channel Termination						
Per Termination						
-	OC3/OC3c	155.52 Mbps	$1,701.49	(N)	$982.50	(N)
-	OC12	622.08 Mbps	$3,321.00	(N)	$982.50	(N)
12.6.9.B Channel Mileage Facility						
Per Mile						
-	OC3/OC3c	155.52 Mbps	$ 175.00			(N)
-	OC12	622.08 Mbps	$ 350.00			(N)
12.6.9.C Channel Mileage Termination						
Per Termination						
-	OC3/OC3c	155.52 Mbps	$ 605.61			(N)
-	OC12	622.08 Mbps	$2,258.75			(N)

ACCESS SERVICE

12. RATES AND CHARGES (Cont'd)

12.6 Special Access Service (Cont'd)

12.6.9 Synchronous Optical Channel Service (Cont'd)

12.6.9.E Optional Features and Functions

		Maximum Monthly Rate	Maximum Nonrecurring Charge	
12.6.9.E.(1) Customer Node				(N)
Per Node				
- OC3/OC3c	155.52 Mbps	$ 618.75 (N)	$246.25	(N)
- OC12	622.08 Mbps	$1,787.50 (N)	$246.25	(N)
Customer Premises Port				
Per Port				
- OC3/OC3c	155.52 Mbps	$ 187.50		(N)
- STS-1	51.84 Mbps	$ 243.75 (N)	$266.25	(N)
- DS3	44.736 Mbps	$ 243.75 (N)	$266.25	(N)
- DS1	1.544 Mbps	$ 62.50 (N)	$ 67.50	(N)
12.6.9.E.(2) Add/Drop Multiplexing				
Central Office Port				
Per Port				
- OC3/OC3c	155.52 Mbps	$ 187.50		(N)
- DS3	44.736 Mbps	$ 125.00		(N)
- DS1	1.544 Mbps	$ 50.00		(N)

	Maximum Monthly Rate	
12.6.9.E.(3) Shared SONET Ring Interoffice Transport		(N)
Per Channel Mileage Facility		
- OC3/OC3c	ICB	(N)
- OC12	ICB	(N)

ACCESS SERVICE

12. RATES AND CHARGES (Cont'd)

12.7 Other Services

12.7.1 Reserved for Future Use

12.7.1.A Deleted (D)

(D)

ACCESS SERVICE

12. RATES AND CHARGES (Cont'd)

12.7 Other Services

12.7.1 Reserved for Future Use

12.7.1.A Deleted (D)

(D)

12. RATES AND CHARGES (Cont'd)

12.7 Other Services (Cont'd)

12.7.1 Reserved for Future Use

(D)

(D)

ACCESS SERVICE

PRICE LIST

Rate Element	Section	Current Rate	Nonrecurring Charge	
Access Order Charge, Per Order	12.1.1		$ 104.00	
Service Date Change Charge, Per Order	12.1.2		$ 40.00	
Design Change Charge, Per Order	12.1.3		$ 40.00	
Expedited Order Charge	12.1.4		$ 520.00	
Cancellation Charge	12.1.5		$ 34.00	
Miscellaneous Service Order Charge	12.1.6		$ 40.00	
Tandem Switched Transport Termination, Per Access Minute	12.2.1.A	$ 0.00024970		(R)
Tandem Switched Facility, Per Access Minute Per Mile	12.2.1.A	$ 0.00002420		(R)
Tandem Switching, Per Access Minute Per Mile	12.2.1.A	$ 0.00085180		(N)
Network Blocking, Per Blocked Call	12.2.1.B	$ 0.01700000		(R)
Local Switching Per Access Minute	12.2.2.A	$ 0.01365170		(I)
Information Surcharge	12.2.2.B	$ -		(R)
Carrier Common Line - Originating Rate Per Minute	12.2.2.C	$ -		(R)
Carrier Common Line - Terminating Rate Per Minute	12.2.2.C	$ -		(R)
800 Data Base Query, Per Originating Query	12.2.2.D	$ 0.00670000		(I)
Local Transport - Installation, Per Line or Trunk	12.2.3.A		$ 324.00	
Directory Access Installation, Charge Per Trunk	12.2.3.B		$ 324.00	
Interim NXX Translation Per Order	12.2.3.C		$ 104.00	
FGC and FGD Conversion of Multifrequency Address				
Signaling to SS7, or SS7 to Multifrequency Address				
Per 24 Trunks Converted or Fraction thereof ,				
Per Order Basis	12.2.3.D		$ 242.00	
Signaling Mileage Facility Per Mile	12.2.4.A	$ 5.83		
Signaling Mileage Termination per Termination	12.2.4.A	$ 58.52		
Signaling Entrance Facility	12.2.4.A	$ 75.64	$ 176.00	
STP Port, Per Port	12.2.4.B	$ 455.00		
Billing Name and Address, Per Request Rate	12.3.1	$ 0.75		

ACCESS SERVICE

PRICE LIST

Rate Element	Section	Current Rate	Nonrecurring Charge
Directory Assistance Service	12.4.1	$ 0.49	
Directory Access Service Per Call	12.4.2	$ 0.0123	
Credit Allowance for Uncompleted DA Calls			
Credit per call - SWA Service billed - non-premium per minute rates	12.4.3	$ 0.0432	
Credit per call - FG A or B SWA Service billed - premium per minute rates	12.4.3	$ 0.0432	
Credit per call when FG C or D SWA Service billed - premium per minute rates	12.4.3	$ 0.0432	
Billing and Collection Services			
Recording, per message recorded	12.5.1	$ 0.0140	
Message Processing, per message processed	12.5.2	$ 0.0100	
Message-Billed Processing, per message processed for billing	12.5.3	$ 0.0610	
Message Billed Inquiry, per message processed for billing	12.5.4	$ 0.0130	
Message-Billed investigation of bill charges, per message processed for billing	12.5.5	$ 0.0033	
Message-Billed message investigation, per message processed for billing	12.5.6	$ 0.0013	
Message-Billed Processing per bill rendered, Intrastate Only	12.5.7	$ 0.3600	
Message-Billed Processing, per bill rendered, Interstate and Intrastate	12.5.7	$ 0.1800	
Data Transmission, per message transmitted or received	12.5.8	$ 0.0030	
CMDS Sampling, per record processed	12.5.9	$ 0.0010	
Metallic Service			
Channel Termination, Per Termination	12.6.2.A	$ 25.59	$ 154.00
Channel Mileage Facility, Per Mile	12.6.2.B	$ 41.50	
Channel Mileage Termination, Per Termination	12.6.2.B	$ 2.60	
Three Premises Bridging, Per Port	12.6.2.C	$ 4.75	
Series Bridging, Per Port	12.6.2.C	$ 4.75	
Telegraph Grade Service			
Channel Termination, Per Termination Two-Wire	12.6.3.A	$ 25.59	$ 154.00
Channel Termination, Per Termination Four-Wire	12.6.3.A	$ 51.18	$ 154.00
Channel Mileage Facility, Per Mile	12.6.3.B	$ 3.46	
Channel Mileage termination, Per Termination	12.6.3.B	$ 31.27	
Telegraph Bridging Per Port, Two-Wire	12.6.3.C	$ 4.75	
Telegraph Bridging Per Port, Four-Wire	12.6.3.C	$ 4.75	

ACCESS SERVICE

PRICE LIST

Rate Element	Section	Current Rate	Nonrecurring Charge
Voice Grade Service			
Channel Termination, Per Termination, Two-Wire	12.6.4.A	$ 43.65	$ 234.00
Channel Termination, Per Termination, Four-Wire	12.6.4.A	$ 68.26	$ 234.00
Channel Mileage Facility, Per Mile	12.6.4.B	$ 3.46	
Channel Mileage Termination, Per Termination	12.6.4.B	$ 31.27	
Voice Bridging, Per Port, Two-Wire	12.6.4.C.(1)(a)	$ 4.75	
Voice Bridging, Per Port, Four-Wire	12.6.4.C.(1)(a)	$ 4.75	
Data Bridging, Per Port, Two-Wire	12.6.4.C.(1)(b)	$ 4.75	
Data Bridging, Per Port, Four-Wire	12.6.4.C.(1)(b)	$ 4.75	
Telephoto Bridging, Per Port, Two-Wire	12.6.4.C.(1)(c)	$ 4.75	
Telephoto Bridging, Per Port, Four-Wire	12.6.4.C.(1)(c)	$ 4.75	
DATAPHONE Select-A-Station Bridging, Sequential Arrangement, Two-Wire	12.6.4.C.(1)(d)	$ 21.31	
DATAPHONE Select-A-Station Bridging, Sequential Arrangement, Four-Wire	12.6.4.C.(1)(d)	$ 113.06	
DATAPHONE Select-A-Station Bridging, Addressable Arrangement, Two-Wire	12.6.4.C.(1)(d)	$ 22.82	
DATAPHONE Select-A-Station Bridging, Addressable Arrangement, Four-Wire	12.6.4.C.(1)(d)	$ 116.16	
Telemetry and Alarm Bridging, Active Bridging Channel Connections, Split Band	12.6.4.C.(1)(e)	$ 8.89	
Telemetry and Alarm Bridging, Active Bridging Channel Connections, Summation	12.6.4.C.(1)(e)	$ 3.47	
Telemetry and Alarm Bridging, Passive Bridging Channel Connections, Summation	12.6.4.C.(1)(e)	$ 0.24	
Conditioning Per Termination			
C Type	12.6.4.C.(2)	$ 16.30	
Improved Attenuation Distortion	12.6.4.C.(2)	$ -	
Improved Envelope Delay Distortion	12.6.4.C.(2)	$ -	
Data Capability	12.6.4.C.(2)	$ 3.94	
Telephoto Capability	12.6.4.C.(2)	$ 8.67	
Sealing Current	12.6.4.C.(2)	$ -	
Improved Return Loss for Effective Transmission, Per Termination			
Two Wire	12.6.4.C.(3)	$ 7.15	
Four Wire	12.6.4.C.(3)	$ 7.15	
Customer Specified Receive Level, Per Two-Wire Termination	12.6.4.C.(4)	$ 3.44	
Multiplexing Per Arrangement, Voice to Telegraph Grade	12.6.4.C.(5)	$ 217.29	
Signaling Capability, Per Termination	12.6.4.C.(6)	$ 11.73	
Selective Signaling Arrangement, Per Arrangement	12.6.4.C.(7)	$ 6.38	
Transfer Arrangement, Per Four Port Arrangement	12.6.4.C.(8)	$ 3.01	
Transfer Arrangement, Per Five Port Arrangement	12.6.4.C.(8)	$ 6.85	

ACCESS SERVICE

PRICE LIST

Rate Element	Section	Current Rate	Nonrecurring Charge
Program Audio Service			
Channel Termination, Per Termination, Monthly Rate			
200 to 3500 Hz	12.6.5.A	$ 41.60	$ 189.00
100 to 5000 Hz	12.6.5.A	$ 44.82	$ 189.00
50 to 8000 Hz	12.6.5.A	$ 44.82	$ 189.00
50 to 15000 Hz	12.6.5.A	$ 44.82	$ 189.00
Channel Termination, Per Termination, Daily Rate			
200 to 3500 Hz	12.6.5.A	$ 4.16	$ 189.00
100 to 5000 Hz	12.6.5.A	$ 4.48	$ 189.00
50 to 8000 Hz	12.6.5.A	$ 4.48	$ 189.00
50 to 15000 Hz	12.6.5.A	$ 4.48	$ 189.00
Channel Mileage Facility, Per Mile, Monthly Rate			
200 to 3500 Hz	12.6.5.B.(1)	$ 3.46	
100 to 5000 Hz	12.6.5.B.(1)	$ 6.91	
50 to 8000 Hz	12.6.5.B.(1)	$ 10.37	
50 to 15000 Hz	12.6.5.B.(1)	$ 13.84	
Channel Mileage Facility, Per Mile, Daily Rate			
200 to 3500 Hz	12.6.5.B.(1)	$ 0.35	
100 to 5000 Hz	12.6.5.B.(1)	$ 0.69	
50 to 8000 Hz	12.6.5.B.(1)	$ 1.04	
50 to 15000 Hz	12.6.5.B.(1)	$ 1.38	
Channel Mileage Termination, Per Termination, Monthly Rate			
200 to 3500 Hz	12.6.5.B.(2)	$ 31.27	
100 to 5000 Hz	12.6.5.B.(2)	$ 62.54	
50 to 8000 Hz	12.6.5.B.(2)	$ 93.81	
50 to 15000 Hz	12.6.5.B.(2)	$ 125.08	
Channel Mileage Termination, Per Termination, Daily Rate			
200 to 3500 Hz	12.6.5.B.(2)	$ 3.13	
100 to 5000 Hz	12.6.5.B.(2)	$ 6.25	
50 to 8000 Hz	12.6.5.B.(2)	$ 9.38	
50 to 15000 Hz	12.6.5.B.(2)	$ 12.51	

ACCESS SERVICE

PRICE LIST

Rate Element	Section	Current Rate	Nonrecurring Charge
Program Audio Service (Cont'd)			
Bridging, Distribution Amplifier Per Port, Monthly Rate	12.6.5.C.(1)	$ 19.19	
Bridging, Distribution Amplifier Per Port, Daily Rate	12.6.5.C.(1)	$ 1.92	
Gain Conditioning Per Service, Monthly Rate	12.6.5.C.(2)	$ 11.23	
Gain Conditioning Per Service, Daily Rate	12.6.5.C.(2)	$ 1.12	
Stereo Per Service, Monthly Rate	12.6.5.C.(3)	$ 18.24	
Stereo Per Service, Daily Rate	12.6.5.C.(3)	$ 1.82	
Video Service			
Channel Termination, Per Termination, Monthly Rate			
TV-1 or 2	12.6.6.A	$ 367.67	$ 762.00
4TV-5	12.6.6.A	$ 358.71	$ 762.00
6TV-5	12.6.6.A	$ 381.16	$ 762.00
TV-15	12.6.6.A	$ 395.63	$ 762.00
Channel Termination, Per Termination, Daily Rate			
TV-1 or 2	12.6.6.A	$ 202.22	$ 762.00
4TV-5	12.6.6.A	$ 197.29	$ 762.00
6TV-5	12.6.6.A	$ 209.64	$ 762.00
TV-15	12.6.6.A	$ 217.60	$ 762.00
Channel Mileage Facility, Per Mile			
All, Monthly Rate	12.6.6.B(1)	$ 336.75	
All, Daily Rate	12.6.6.B(1)	$ 185.21	
Channel Mileage Termination, Per Termination			
All, Monthly Rate	12.6.6.B(2)	$ 358.67	
All, Daily Rate	12.6.6.B(2)	$ 197.27	
Digital Data Service			
Channel Termination, Per Termination, Monthly Rate			
2.4 kbps	12.6.7.A	$ 79.05	
4.8 kbps	12.6.7.A	$ 79.05	
9.6 kbps	12.6.7.A	$ 79.05	
56.0 kbps	12.6.7.A	$ 79.05	
Channel Termination, Per Termination, Daily Rate			
2.4 kbps	12.6.7.A	$ 221.00	
4.8 kbps	12.6.7.A	$ 221.00	
9.6 kbps	12.6.7.A	$ 221.00	
56.0 kbps	12.6.7.A	$ 221.00	

ACCESS SERVICE

PRICE LIST

Rate Element	Section	Current Rate	Nonrecurring Charge
Digital Data Service (Cont'd)			
Channel Mileage Facility, Per Mile			
2.4 kbps	12.6.7.B.(1)	$ 3.46	
4.8 kbps	12.6.7.B.(1)	$ 3.46	
9.6 kbps	12.6.7.B.(1)	$ 3.46	
56.0 kbps	12.6.7.B.(1)	$ 6.91	
Channel Mileage Termination, Per Termination			
2.4 kbps	12.6.7.B.(2)	$ 31.27	
4.8 kbps	12.6.7.B.(2)	$ 31.27	
9.6 kbps	12.6.7.B.(2)	$ 31.27	
56.0 kbps	12.6.7.B.(2)	$ 62.54	
Bridging Per Port	12.6.7.C(1)	$ 4.75	
Loop Transfer Arrangement, Per four port arrangement	12.6.7.C(2)	$ 5.97	
Channel Service Unit Per Termination			
2.4 kbps	12.6.7.D	$ 25.90	
4.8 kbps	12.6.7.D	$ 25.90	
9.6 kbps	12.6.7.D	$ 32.10	
56.0 kbps	12.6.7.D	$ 34.14	
High Capacity Service			
Channel Termination, Per Termination			
1.544 Mbps	12.6.8.A	$ 205.99	$ 429.00
Channel Mileage			
Channel Mileage Facility, Per Mile			
64 kbps	12.6.8.B.(1)	$ 6.91	
1.544 Mbps	12.6.8.B.(1)	$ 70.54	
Channel Mileage Termination, Per Termination			
64 kbps	12.6.8.B.(2)	$ 62.54	
1.544 Mbps	12.6.8.B.(2)	$ 261.62	

ACCESS SERVICE

PRICE LIST

Rate Element	Section	Current Rate	Nonrecurring Charge
High Capacity Service (Cont'd)			
Multiplexing, Per Arrangement			
DS3 to DS1	12.6.8.C.(1)	$ 608.37	
DS1 to Voice	12.6.8.C.(1)	$ 196.53	
DS1 to DSO	12.6.8.C.(1)	$ 198.38	
DSO to Subrates			
Up to 20 2.4 kbps services	12.6.8.C.(1)	$ 301.92	
Up to 10 4.8 kbps services	12.6.8.C.(1)	$ 185.32	
Up to 5 9.6 kbps services	12.6.8.C.(1)	$ 161.92	
Automatic Loop Transfer, Per arrangement	12.6.8.C.(2)	$ 389.24	
Transfer Arrangement, Per Four Port Arrangement	12.6.8.C.(3)	$ 165.42	
Clear Channel Capability, Per 1.544 Mbps Transmission Path	12.6.8.C.(4)	$ -	
Network Channel Termination, Equipment (NCTE) Per Termination			
1.544 Mbps	12.6.8.D	$ 78.05	
Automatic Loop Transfer	12.6.8.D	$ 896.16	
Synchronous Optical Channel Service			
Channel Termination, Per Termination			
OC3/OC3c, 155.52 Mbps	12.6.9.A	$ 1,361.19	$ 786.00
OC12, 622.08 Mbps	12.6.9.A	$ 2,656.80	$ 786.00
Channel Mileage Facility, Per Mile			
OC3/OC3c, 155.52 Mbps	12.6.9.B	$ 140.00	
OC12, 622.08 Mbps	12.6.9.B	$ 280.00	
Channel Mileage Termination, Per Termination			
OC3/OC3c, 155.52 Mbps	12.6.9.C	$ 484.49	
OC12, 622.08 Mbps	12.6.9.C	$ 1,807.00	
Customer Node, Per Node			
OC3/OC3c, 155.52 Mbps	12.6.9.E.(1)	$ 495.00	$ 197.00
OC12, 622.08 Mbps	12.6.9.E.(1)	$ 1,430.00	$ 197.00
Customer Premises Port, Per Port			
OC3/OC3c, 155.52 Mbps	12.6.9.E.(1)	$ 150.00	
STS-1, 51.84 Mbps	12.6.9.E.(1)	$ 195.00	$ 213.00
DS3, 44.736 Mbps	12.6.9.E.(1)	$ 195.00	$ 213.00
DS1, 1.544 Mbps	12.6.9.E.(1)	$ 50.00	$ 54.00

ACCESS SERVICE

PRICE LIST

Rate Element	Section	Current Rate	Nonrecurring Charge	
Synchronous Optical Channel Service (Cont'd)				
Add/Drop Multiplexing				
Central Office Port, Per Port				
OC3/OC3c, 155.52 Mbps	12.6.9.E.(2)	$ 150.00		
DS3, 44.736 Mbps	12.6.9.E.(2)	$ 100.00		
DS1, 1.544 Mbps	12.6.9.E.(2)	$ 40.00		
Public Packet Data Network – Frame Relay				
Frame Relay Access Connection , Per				
56.0 kbps	12.7.1.A.(1)	Deleted	Deleted	(D)
64.0 kbps	12.7.1.A.(1)	Deleted	Deleted	
1.544 Mbps	12.7.1.A.(1)	Deleted	Deleted	
Frame Relay Inter-network Connection , Per				
1.544 Mbps	12.7.1.A.(2)	Deleted	Deleted	
End User Port (Per Port)				
56.0 kbps	12.7.1.A.(3)	Deleted	Deleted	
64.0 kbps	12.7.1.A.(3)	Deleted	Deleted	
1.544 Mbps	12.7.1.A.(3)	Deleted	Deleted	
Inter-network Customer Port (Per Port)	12.7.1.A.(4)	Deleted	Deleted	
Term Discounts				
36 Months	12.7.1.A.(5)	Deleted	Deleted	
60 Months	12.7.1.A.(5)	Deleted	Deleted	(D)

ACCESS SERVICE

PRICE LIST

Rate Element	Section	Current Rate	Nonrecurring Charge	
Public Packet Data Network - Frame Relay (Cont'd)				(D)
Permanent Virtual Connections (PVCs)				
Standard				
8 kbps	12.7.1.A.(6)(a)	Deleted		
16 kbps	12.7.1.A.(6)(a)	Deleted		
28 kbps	12.7.1.A.(6)(a)	Deleted		
32 kbps	12.7.1.A.(6)(a)	Deleted		
56 kbps	12.7.1.A.(6)(a)	Deleted		
64 kbps	12.7.1.A.(6)(a)	Deleted		
128 kbps	12.7.1.A.(6)(a)	Deleted		
192 kbps	12.7.1.A.(6)(a)	Deleted		
256 kbps	12.7.1.A.(6)(a)	Deleted		
384 kbps	12.7.1.A.(6)(a)	Deleted		
512 kbps	12.7.1.A.(6)(a)	Deleted		
768 kbps	12.7.1.A.(6)(a)	Deleted		
Extended				
8 kbps	12.7.1.A.(6)(b)	Deleted		
16 kbps	12.7.1.A.(6)(b)	Deleted		
28 kbps	12.7.1.A.(6)(b)	Deleted		
32 kbps	12.7.1.A.(6)(b)	Deleted		
56 kbps	12.7.1.A.(6)(b)	Deleted		
64 kbps	12.7.1.A.(6)(b)	Deleted		
128 kbps	12.7.1.A.(6)(b)	Deleted		
192 kbps	12.7.1.A.(6)(b)	Deleted		
256 kbps	12.7.1.A.(6)(b)	Deleted		
384 kbps	12.7.1.A.(6)(b)	Deleted		
512 kbps	12.7.1.A.(6)(b)	Deleted		
768 kbps	12.7.1.A.(6)(b)	Deleted		
PVC Installation Charge	12.7.1.A(7)		Deleted	
PVC Rearrangement Charge	12.7.1.A(8)		Deleted	(D)