ACCESS SERVICE TARIFF

ISSUED: July 29, 1994

EFFECTIVE: August 31, 1994

REGULATIONS, RATES AND CHARGES

Applying to the provision of Access Services within an exchange for connection to Intrastate

Communications Facilities for Customers within the operating territory of

UNITED TELEPHONE COMPANY OF THE CAROLINAS

In the State of South Carolina

As set forth on Title Page 2.

Access Services are provided by means of wire,

fiber optics, radio or any other suitable

technology or a combination thereof.

ACCESS SERVICE TARIFF

ISSUED: September 10, 1997

EFFECTIVE: October 28, 1997

Following are the exchanges in which Access Services are available in South Carolina. The exchange areas are as defined by maps filed with the Public Service Commission of South Carolina as part of the Company's Local Exchange Tariff.

BEAUFORT
BRANCHVILLE
CHAPPELLS
CROSS HILL
ESTILL
EUTAWVILLE
GREENWOOD
HAMPTON
HODGES
HOLLY HILL
LAUREL BAY
LOW COUNTRY (N)
MOUNTVILLE
NINETY SIX
RIDGELAND
SALUDA
ST. HELENA ISLAND
TROY
WARE SHOALS

Reserved For Future Use (N)

(D)

(D)

TABLE OF CONTENTS

	Page No.	
Concurring Carriers	20	
Connecting Carriers	20	
Other Participating Carriers	20	
Explanation of Symbols	21	
Explanation of Abbreviations	21	
Reference to Other Tariffs	***22.1***	(T)
1. APPLICATION OF TARIFF	23	
2. GENERAL REGULATIONS	24	
2.1 Undertakings of the Company	24	
2.1.1 Scope	24	
2.1.2 Limitations	24	
2.1.3 Liability	26.1	
2.1.4 Provision of Services	29	
2.1.5 Installation and Termination of Services	29	
2.1.6 Maintenance of Services	30	
2.1.7 Changes and Substitutions	30	
2.1.8 Refusal and Discontinuance of Service	31	
2.1.9 Limitation of Use of Metallic Facilities	33	
2.1.10 Notification of Service Affecting Activities	33	
2.1.11 Coordination with Respect to Network Contingencies	33	
2.1.12 Provision and Ownership of Telephone Numbers	34	
2.2 Use	34	
2.2.1 Reserved For Future Use	34	
2.2.2 Interference or Impairment	34	
2.2.3 Unlawful Use	35	

TABLE OF CONTENTS
(Cont'd)

			Page No.
2.	GENERAL REGULATIONS (Cont'd)		
2.3	Obligations of the Customer		35
	2.3.1	Damages	35
	2.3.2	Ownership of Facilities and Theft	36
	2.3.3	Equipment Space and Power	36
	2.3.4	Reserved For Future Use	36
	2.3.5	Reserved For Future Use	37
	2.3.6	Availability for Testing	37
	2.3.7	Balance	37
	2.3.8	Design of Customer Services	37
	2.3.9	References to the Company	38
	2.3.10	Reserved For Future Use	38
	2.3.11	Claims and Demands for Damages	38
	2.3.12	Sectionalization-Trouble Reporting	39
	2.3.13	Coordination with Respect to Network Contingencies	40
	2.3.14	Jurisdictional Report Requirements	40
	2.3.15	Determination of Intrastate Charges for Mixed Interstate and Intrastate Access Service, CCS/SS7 Interconnection Service and/or LIDB Access Service	47
2.4	Payment Arrangements and Credit Allowances		47
	2.4.1	Payment of Rates, Charges and Deposits	47
	2.4.2	Minimum Period	54
	2.4.3	Cancellation of an Order for Service	55
	2.4.4	Credit Allowance for Service Interruptions	55
	2.4.5	Customer Bill Verification	62
	2.4.6	Reestablishment of Service Following Fire, Flood or Other Occurrence	62
	2.4.7	Title or Ownership Rights	63
	2.4.8	Ordering, Rating and Billing of Access Services Where More Than One Exchange Telephone Company is Involved	64
	2.4.9	Service Performance Provisioning Guarantee	73.1

TABLE OF CONTENTS
(Cont'd)

		Page No.	
2.	GENERAL REGULATIONS (Cont'd)		
2.5	Connections	74	
2.5.1	General	74	
2.6	Definitions	74	
	Access Code	74	
	Access Minutes	74	
	Access Tandem	74	
	Account	75	
	Aggregator	75	
	Alternate Billing Service (ABS)	75	
	Answer Message	75	
	Answer/Disconnect Supervision	75	
	Asynchronous	75	
	Attenuation Distortion	75	
	Balance (100 Type) Test Line	75.1	
	Billed Number Screening (BNS)	75.1	
	Bit	75.1	
	Business Day	75.1	
			(D)
	Byte	76	
	Call	76	
	Carrier or Common Carrier	76	
	Carrier Access Code (CAC)	***76***	
	Carrier Identification Code (CIC)	***76***	
	Carrier Identification Parameter	76	
	CCS	***76.1***	
	Central Office	***76.1***	
	Central Office Building	***76.1***	
	Central Office Prefix	77	
	Centralized Automatic Reporting on Trunks Testing	77	
	Channel(s)	77	
	Channel Service Unit	77	
	Channelize	77	
	Circuit Termination	77	
	Clear Channel Capability (CCC)	77	
			(D)

TABLE OF CONTENTS
(Cont'd)

Page No.

2. GENERAL REGULATIONS (Cont'd)

2.6 Definitions (Cont'd)

C-Message Noise 78
C-Notched Noise 78
Collocation - POT 78
Collocation Space 78
Common Line 78
Communications System 78
Completed Call 79
Conventional Signaling 79
Cost 79
Customer(s) 79
Customer Designated Premises 79
Customer Transport Facilities 79
Data terminal Equipment (DTE) 79.1
Data Transmission (107 Type) Test Line 79.1
Decibel 79.1
Decibel Reference Noise C-Message Weighting 79.1
Decibel Reference Noise C-Message Reference to 0 80
Detail Billing 80

(D)

Directory Assistance (Intrastate) 80
Directory Assistance Location (Intrastate) 80
Direct-Trunked Transport 80
Dual Tone Multifrequency Address Signaling 80
Echo Control 81
Echo Path Loss (EPL) 81
Echo Return Loss (ERL) 81
Effective 2-Wire 81
Effective 4-Wire 81
End Office Switch 82
End User 82
Entry Switch 82
Envelope Delay Distortion 82

TABLE OF CONTENTS
(Cont'd)

Page No.

2. GENERAL REGULATIONS (Cont'd)

2.6 Definitions (Cont'd)

(D)

Equal Level Echo Path Loss (ELEPL)	82
Exit Message	83
Expected Measured Loss	83
Exchange	83
Exchange Access Signaling	83
Exchange Termination	83
Extended Area Service	83
Field Identifier	84
Firm Access Order	84
Firm Order Confirmation Date	84
First-Come, First-Served	84
First Point of Switching	84
Frequency Shift	84
Geographical Market Area (GMA)	84
Grandfathered	85
Holding Time	85
Host Office	85
Hub	85
Immediately Available Funds	86
Impedance Balance	86
Impulse Noise	86
Individual Case Basis (ICB)	86
Initial Address Message	86
Inserted Connection Loss	86
Interexchange Carrier (IC) or Interexchange Common Carrier	87
Intermodulation Distortion	87
Interstate Communications	87
Intrastate Communications	87
Intrastate Service Arrangement	87
Jointly Used Subscriber Plant	87
Kilobits Per Second (Kbps)	87
Line Information Database (LIDB)	88

TABLE OF CONTENTS
(Cont'd)

Page No.

2. GENERAL REGULATIONS (Cont'd)

2.6 Definitions (Cont'd)

Line Side Connection	88	
Local Access and Transport Area (LATA)	88	
Local Calling Area	88	
Local Circuit Facility	88	
Local Tandem Switch	88	
Loop Around Test Line	88	
Loss Deviation	89	
Maintenance Test Unit (MTU)	89	
Maritime Radio Common Carriers (MRCCs)	89	
Major Fraction Thereof	89	
Message	89	
Milliwatt (102 Type) Test Line	89	
Minutes of Use	90	
Multiline Business Customer	90	
Network Control Signaling	90	
Nonsynchronous Test Line	90	
North American Numbering Plan	90	
Off-Hook	90	
On-Hook	90.1	
Open Circuit Test Line	90.1	
Operator Service System (OSS)	90.1	
Optical Carrier Level (n) (Ocn)	***90.1***	(N)
Optical Carrier Level n Concatenated (OCnc)	90.1	
Optical Carrier Rate (OC#)	***90.1***	
Optical Carrier Rate Concatenated (OC#c)	90.1	(N)
Originating Direction	***90.2***	(T)
Originating Point Code (OPC)	***90.2***	
Other Tariffed Services	***90.2***	
Overlap Outpulsing	***90.2***	(T)
Pay Telephone	91	
Permanent Virtual Circuit (PVC)	91	
Personal Identification Number (PIN)	91	
Phase Jitter	91	
Point of Termination	91	
Premises	91	
Primary Exchange Carrier	91	
Protocol	91	
Query	92	

TABLE OF CONTENTS
(Cont'd)

Page No.

2. GENERAL REGULATIONS (Cont'd)

2.6 Definitions (Cont'd)

Radio Common Carriers (RCCs)	92	
Registered Equipment	92	
Release Message	92	
Remote Switching Modules and/or Remote Switching Systems	92	
Response	92.1	
Responsible Organization	92.1	
Return Loss	92.1	
Reverse Charge Blocking	92.1	
Secondary Exchange Carrier	92.1	
Service Control Point (SCP)	92.1	
Service Switching Point (SSP)	92.1	
Serving Wire Center	93	
Seven Digit Manual Test Line	93	
Short Circuit Test Line	93	
Signal-To-C-Notched Noise Ratio	93	
Signal Transfer Point (STP)	93	
Signaling System 7 (SS7)	93	
Singing Return Loss	93	
Single Line Business Customer	94	
Special Order	94	
Subtending End Office of an Access Tandem	94	
Switch Termination	94	
Synchronous	94	
Synchronous Optical Network (SONET)	***94***	(N)
Synchronous Test Line	94	
Synchronous Transport Signal Level (STS1)	94.1	(N)
Tandem-Switched Transport	***94.1***	(T)
Terminating Direction	94.1	
Toll Free Code (TFC)	94.1	
Toll Free Code Service Management System (TFC SMS)	94.1	
Toll Free Code (TFC) Service Provider	94.1	
Transmission Measuring (105 Type) Test Line/Responder	95	
Transmission Path	95	
Trunk	95	
Trunk Group	95	
Trunk Side Connection	95	
Two-Wire to Four-Wire Conversion	95	

TABLE OF CONTENTS
(Cont'd)

Page No.

2. GENERAL REGULATIONS (Cont'd)

2.6 Definitions (Cont'd)

(D)

V&H Coordinates Method 96
WATS Serving Office 96
Wire Center 96

TABLE OF CONTENTS
(Cont'd)

			Page No.
3.	CARRIER COMMON LINE ACCESS SERVICE		97
3.1	General Description		97
3.2	Limitations		97
	3.2.1	Exclusions	97
	3.2.2	Access Groups	97
	3.2.3	WATS Special Access Circuits	98
3.3	Undertakings of the Company		98
	3.3.1	Provision of Service	98
	3.3.2	Interstate and Intrastate Use	98
3.4	Obligations of the Customer		99
	3.4.1	Switched Access Service Requirement	99
	3.4.2	Supervision	99
3.5	Determination of Usage Subject to Carrier Common Line Access Charges		99
	3.5.1	Determination of Jurisdiction	99
	3.5.2	Cases Involving Usage Recording by the Customer	99
	3.5.3	Local Exchange Access and Enhanced Services Exemption	100
3.6	Resold Services		100
	3.6.1	Scope	100
	3.6.2	Customer Obligations Concerning the Resale of MTS and MTS-like Services	101
	3.6.3	Resale Documentation Provided by the Customer	101
	3.6.4	Rate Regulations Concerning the Resale of MTS and MTS-like Services	102
3.7	Reserved For Future Use		107

TABLE OF CONTENTS
(Cont'd)

			Page No.	
3.	CARRIER COMMON LINE ACCESS SERVICE (Cont'd)			
	3.8	Rate Regulations	111	
	3.8.1	Billing of Charges	111	
	3.8.2	Measuring and Recording of Call Detail	111	
	3.8.3	Unmeasured Feature Group A and B Usage	112	
	3.8.4	Percent Intrastate Use (PIU)	112	
	3.8.5	Determination of Premium and Non Premium Charges	113	
	3.8.6	***Reserved for Future Use***	115	(C)
	3.9	Rates and Charges	116	
4.	THIS SECTION RESERVED FOR FUTURE USE		117	
5.	ORDERING OPTIONS FOR SWITCHED AND SPECIAL ACCESS SERVICE		127	
	5.1	General	127	
	5.1.1	Ordering Conditions	127	
	5.1.2	Provision of Other Services	128	
	5.1.3	Special Construction	129	
	5.1.4	Discontinuance of Service	129	

TABLE OF CONTENTS
(Cont'd)

			Page No.	
5.	ORDERING OPTIONS FOR SWITCHED AND SPECIAL ACCESS SERVICE (Cont'd)			
	5.2	Access Order	130	
	5.2.1	Access Order Service Date Intervals	135	
	5.2.2	Access Order Charge	137	
	5.5.3	Access Order Modifications	138	
	5.2.4	Cancellation of an Access Order	145	
	5.2.5	Selection of Facilities For Access Orders	149	
	5.2.6	Minimum Period	150	
	5.2.7	Minimum Period Charges	151	
	5.2.8	Shared Use Facilities	152	
	5.3	Available Inventory	152	
	5.4	Switched Access Service Minimum Capacity Requirements	153	
	5.5	***Reserved for future use***	155	(T)
				(D)
				(D)
	5.6	Reserved For Future Use	157	
6.	SWITCHED ACCESS SERVICE		162	
	6.1	General	162	
	6.1.1	Switched Access Service Arrangements and Manner of Provision	162	
	6.1.2	WATS Access Line Service	168	
	6.1.3	Rate Categories	168	
	6.1.4	Special Facilities Routing	190	
	6.1.5	Design Layout Report	190	
	6.1.6	Testing	190	
	6.1.7	Ordering Options and Conditions	192	

TABLE OF CONTENTS
(Cont'd)

			Page No.	
6.	SWITCHED ACCESS SERVICE (Cont'd)			
6.2	Provision and Description of Switched Access Service Arrangements		192	
	6.2.1	Feature Group A (FGA)	193	
	6.2.2	Feature Group B (FGB)	199	
	6.2.3	Feature Group C (FGC)	204	
	6.2.4	Feature Group D (FGD)	209	
	6.2.5	Toll Free Code (TFC) Access Service	216	
	6.2.6	900 Access Service	219	
	6.2.7	Interim 500 Access Service	221.1	
	6.2.8	***Reserved For Future Use***	221.4	(C)
	6.2.9	OptiPoint Services	221.7	
6.3	Local Switching Optional Features (where equipment is available)		222	
6.4	Service Provisioning		237	
	6.4.1	Standard Transmission Specifications	237	
	6.4.2	Data Transmission Parameters	245	
	6.4.3	Interface Groups	284	
6.5	Obligations of the Company		249	
	6.5.1	Network Management	249	
	6.5.2	Design and Traffic Routing of Switched Access Service	249	
	6.5.3	Provision of Service Performance Data	250	
	6.5.4	Trunk Group Measurement Reports	251	
	6.5.5	Determination of Number of Transmission Paths	251	
	6.5.6	Design Blocking Probability	252	

TABLE OF CONTENTS
(Cont'd)

			Page No.	
6.	SWITCHED ACCESS SERVICE (Cont'd)			
6.6	Obligations of the Customer		254	
	6.6.1	Report Requirements	255	
	6.6.2	Supervisory Signaling	257	
	6.6.3	Trunk Group Measurement Reports	257	
	6.6.4	Design of Switched Access Services	257	
6.7	Rate Regulations		257	
	6.7.1	Description and Application of Rates and Charges	257	
	6.7.2	Minimum Periods	270	
	6.7.3	Reserved For Future Use	270	
	6.7.4	Minimum Monthly Charge	270	
	6.7.5	Reserved For Future Use	270	
	6.7.6	Change of Feature Group Type	271	
	6.7.7	Moves	272	
	6.7.8	Measuring Access Minutes	272	
	6.7.9	Network Blocking Charge for Feature Group D	280	
	6.7.10	Application of Rates for Extension Service	281	
	6.7.11	Message Unit Credit	281	
	6.7.12	Local Information Delivery Services	281	
	6.7.13	Mileage Measurement	281	
	6.7.14	Shared Use	286	
	6.7.15	***Reserved For Future Use***	287	(C)
	6.7.16	Interim 500 or 900 NXX in Multi-State LATAs	287	
	6.7.17	Facility Hubs	287	
	6.7.18	Reserved For Future Use	287.1	

TABLE OF CONTENTS
(Cont'd)

			Page No.	
6.	SWITCHED ACCESS SERVICE (Cont'd)			
6.8	Rates and Charges		288	
6.8.1	***Reserved For Future Use***		288	(C)
6.8.2	Switched Transport		288	
6.8.3	Local Switching		295	
6.8.4	Toll Free Code (TFC) Access Service		298	
6.8.5	Reserved For Future Use		299	
6.8.6	***Reserved For Future Use***		299	(C)
6.8.7	Optical Service Charge		300	
6.8.8	Reserved for Future Use		300	
7.	SPECIAL ACCESS SERVICE		301	
7.1	General		301	
7.1.1	Channel Types		301	
7.1.2	Rate Categories		304	
7.1.3	Service Configurations		307	
7.1.4	Alternate Use		310	
7.1.5	Special Facilities Routing		311	
7.1.6	Design Layout Report		311	
7.1.7	Acceptance Testing		312	
7.1.8	Ordering Options and Conditions		312	
7.1.9	Reserved For Future Use		313	
7.2	Service Descriptions		313	
7.2.1	Reserved For Future Use		315	
7.2.2	Reserved For Future Use		316	
7.2.3	Voice Grade		317	
7.2.4	Reserved For Future Use		327	
7.2.5	Reserved For Future Use		328	
7.2.6	Reserved For Future Use		329	
7.2.7	Reserved For Future Use		330	
7.2.8	Digital Data		332	
7.2.9	High Capacity		334	
7.2.10	Special Access Service Utilized for Connection with Switched Access Service		339	
7.2.11	Reserved for Future Use		339.2	

TABLE OF CONTENTS
(Cont'd)

			Page No.	
7.	SPECIAL ACCESS SERVICE (Cont'd)			
7.3	Channel Interface and Network Channel Codes		340	
	7.3.1	Glossary of Channel Interface Codes and Options	340	
	7.3.2	Impedance	345	
	7.3.3	Digital Hierarchy Channel Interface Codes (4DS)	346	
	7.3.4	Service Designator/Network Channel Code Conversion Table	346	
	7.3.5	Compatible Channel Interfaces	348	
7.4	Rate Regulations		364	
	7.4.1	Type of Rates and Charges	364	
	7.4.2	Surcharge for Special Access Service	368	
	7.4.3	Reserved For Future Use	372	
	7.4.4	Minimum Periods	372	
	7.4.5	Moves	372	
	7.4.6	Mileage Measurement	373	
	7.4.7	Facility Hubs	374	
	7.4.8	Shared Use of Digital High Capacity Services	376	
	7.4.9	Special Access Term Discount Plan	377	
	7.4.10	***Reserved for Future Use***	***377.6***	(C)
	7.4.11	Multiplexer Access Service Connection (MASC)	377.6	
7.5	Rates and Charges		378	
	7.5.1	Reserved For Future Use	378	
	7.5.2	***Reserved For Future Use***	***379***	(C)
	7.5.3	Voice Grade Service	383	
	7.5.4	Reserved For Future Use	394	
	7.5.5	Reserved For Future Use	394	
	7.5.6	Reserved For Future Use	395	
	7.5.7	***Reserved For Future Use***	***396***	(C)
	7.5.8	Digital Data Service	399	
	7.5.9	High Capacity Service	403	
	7.5.10	Special Access Term Discount Plan	407.1	
	7.5.11	Reserved For Future Use	407.6	
	7.5.12	Special Access Surcharge	408	
	7.5.13	***Reserved for Future Use***	***408***	(C)

TABLE OF CONTENTS
(Cont'd)

			Page No.
7.	SPECIAL ACCESS SERVICE (Cont'd)		
	7.6	Individual Case Filings	409
8.	BILLING AND COLLECTION SERVICES		410
	8.1	Recording and Message Processing Service	410
	8.1.1	General Description	411
	8.1.2	Undertakings of the Company	412
	8.1.3	Liability of the Company	417
	8.1.4	Obligations of the Customer	417
	8.1.5	Payment Arrangements and Audit Provision	419
	8.1.6	Rate Regulations	422
	8.1.7	Rates and Charges	423
	8.2	Billing Service	431
	8.2.1	Bill Processing Service	432
	8.2.2	Purchase of Accounts Receivable	456
	8.3	Billing Analysis Service	461
	8.3.1	General Description	461
	8.3.2	Undertakings of the Company	462
	8.3.3	Liability of the Company	469
	8.3.4	Obligations of the Customer	469
	8.3.5	Payment Arrangements	471
	8.3.6	Rate Regulations	472
	8.3.7	Rates and Charges	472

TABLE OF CONTENTS
(Cont'd)

			Page No.
8.	BILLING AND COLLECTION SERVICES (Cont'd)		
8.4	Billing Information Service		476
	8.4.1	General Description	476
	8.4.2	Undertakings of the Company	476
	8.4.3	Liability of the Company	481
	8.4.4	Obligations of the Customer	481
	8.4.5	Payment Arrangements	482
	8.4.6	Rate Regulations	483
	8.4.7	Rates and Charges	485
8.5	Private Line Billing Service		488
8.6	Billing Services Under Contract		500
	8.6.1	General	500
	8.6.2	Conditions for Contracts	500
8.7	Contracted Rate Schedules		500
	8.7.1	General	500
	8.7.2	Rate Schedule	500
	8.7.3	Reserved For Future Use	501
	8.7.4	Reserved For Future Use	501.1
	8.7.5	Reserved For Future Use	501.2
9.	DIRECTORY ASSISTANCE SERVICE		502

TABLE OF CONTENTS
(Cont'd)

		Page No.
10.	SPECIAL FEDERAL GOVERNMENT ACCESS SERVICES	503
10.1	General503	
10.2	Emergency Conditions	503
10.3	Intervals to Provide Service	504
10.4	Reserved For Future Use	504
10.5	Safeguarding of Service	504
10.5.1	Facility Available	504
10.6	Federal Government Regulations	505
10.7	Service Offerings to the Federal Government	505
10.7.1	Type and Description	505
10.7.2	Mileage Application	508.3
10.7.3	Rates and Charges	509
11.	SPECIAL FACILITIES ROUTING OF ACCESS SERVICES	513
11.1	Description of Special Facilities Routing of Access Services	513
11.1.1	Diversity	513
11.1.2	Avoidance	513
11.1.3	Cable-Only Facilities	513
11.2	Rates and Charges for Special Facilities Routing of Access Service	514
11.2.1	Diversity	514
11.2.2	Avoidance	515
11.2.3	Diversity and Avoidance Combined	515
11.2.4	Cable-Only Facilities	515

TABLE OF CONTENTS
(Cont'd)

		Page No.	
12.	SPECIALIZED SERVICES OR ARRANGEMENTS	516	
	12.1 General516		
	12.2 Move Charges	516	
	12.3 Rates and Charges	517	
13.	ADDITIONAL ENGINEERING, ADDITIONAL LABOR AND MISCELLANEOUS SERVICES 518		
	13.1 Additional Engineering	518	
	13.1.1 Charges for Additional Engineering	519	
	13.2 Additional Labor	520	
	13.2.1 Overtime Installation	520	
	13.2.2 Overtime Repair	520	
	13.2.3 Standby	520	
	13.2.4 Testing and Maintenance with Other Telephone Companies	520	
	13.2.5 Reserved For Future Use	520	
	13.2.6 Other Labor	521	
	13.2.7 Charges for Additional Labor	521	
	13.3 Miscellaneous Services	524	
	13.3.1 Maintenance of Service	524	
	13.3.2 Reserved For Future Use	527	
	13.3.3 Presubscription	528	
	13.3.4 Reserved for Future Use	535	
	13.3.5 Testing Services	540	
	13.3.6 Provision of Access Service Billing Information (ASBI)	567	
	13.3.7 Billing Name and Address (BNA)	569.1	
	13.3.8 Reserved For Future Use	570	(C)
	13.3.9 Telecommunications Service Priority (TSP) System	573	
	13.3.10 900 Access Blocking	578	
	13.3.11 Carrier Call Transfer Service	578.1	
	13.3.12 Blocking and Screening Services	578.3	
	13.3.13 Individual Case Filings	578.5	

TABLE OF CONTENTS
(Cont'd)

		Page No.
14.	SPECIAL CONSTRUCTION	579
14.1	General	579
14.2	Regulations	579
14.2.1	Filing of Charges	579
14.2.2	Ownership of Facilities	579
14.2.3	Interval to Provide Facilities	579
14.2.4	Special Construction Involving Both Interstate and Intrastate Facilities	580
14.2.5	Payment for Special Construction	580
14.2.6	Liabilities and Charges for Special Construction	581
14.2.7	Deferral of Start of Service	595
14.2.8	Definitions	596
14.3	Rates and Charges	599
14.3.1	Charges to Provide Permanent Facilities to the Federal Government	599
14.3.2	Charges to Provide Permanent Facilities Other Than To the Federal Government	600

TABLE OF CONTENTS
(Cont'd)

		Page No.	
15.	COMMON CHANNEL SIGNALING/SIGNALING SYSTEM 7 (CCS/SS7) DATA BASE SERVICES	601	
	15.1 Line Information Data Base (LIDB)	601	
	15.1.1 General	601	
	15.1.2 Description	601	
	15.1.3 Undertakings of the Company	604	
	15.1.4 Obligations of the Customer	606	
	15.1.5 Rate Regulations	607	
	15.1.6 Rates and Charges	609	
16.	***OPERATOR SERVICES***	***610***	(C)
	16.1 Operator Services Description	***610***	(N)
	16.1.1 Operator Transfer Services (OTS)	***610***	
	16.1.2 Operator Inward Assistance (OIA) Service	***611***	
	16.2 Manner of Provisioning	***611***	
	16.2.1 Operator Transfer	***612***	
	16.2.2 Signaling	***613***	
	16.2.3 Design Layout Report	***613***	
	16.2.4 Design Blocking	***614***	
	16.2.5 Testing	***614***	
	16.2.6 Interface Groups and Transmission Parameters	***614***	
	16.2.7 Ordering and Billing Options and Conditions	***614***	
	16.3 Liability of the Telephone Company	***615***	
	16.4 Obligations of the Customer	***616***	
	16.5 Rate Regulations	***617***	
	16.5.1 Description and Application of Rates and Charges	***617***	
	16.5.2 Rates and Charges	***618***	(N)

(M)

(M) Material previously appearing on this page now appears on Page 19.2.

TABLE OF CONTENTS
(Cont'd)

(M)

		Page No.
17.	COLLOCATION SERVICES	620
17.1	Basic Service Description	620
17.2	Regulations	627
17.3	Liability	629
17.4	Network Compatibility and Standards	629.2
17.5	Physical Collocation	629.2
17.6	Virtual Collocation	629.12
17.7	Rates and Charges	629.15
18.	SPECIALIZED NETWORK SERVICES	630
18.1	General	630
18.2	Frame Relay Service	630
18.2.1	Description	630
18.2.2	Service Components	631
18.2.3	Rate Regulations	632
18.2.4	FRS Term Discount Plans	633
18.2.5	Rates and Charges	637

(M)

(M) Material now appearing on this page previously appeared on Fourth Revised Page 19.1.

CONCURRING CARRIERS

NO CONCURRING CARRIERS

CONNECTING CARRIERS

NO CONNECTING CARRIERS

OTHER PARTICIPATING CARRIERS

NO OTHER PARTICIPATING CARRIERS

EXPLANATION OF SYMBOLS

(C)	-	To signify changed regulation
(D)	-	To signify discontinued rate or regulation
(I)	-	To signify increase
(M)	-	To signify matter relocated without change
(N)	-	To signify new rate or regulation
(R)	-	To signify reduction
(S)	-	To signify reissued matter
(T)	-	To signify a change in text but no change in rate or regulation
(Z)	-	To signify a correction

EXPLANATION OF ABBREVIATIONS

ac	-	alternating current
ABS	-	Alternate Billing Service
AML	-	Actual Measured Loss
ANI	-	Automatic Number Identification
ASR	-	Access Service Request (D)
AT&T	-	American Telephone and Telegraph Company
AUL	-	Annual Underutilization Liability
AULP	-	Annual Underutilization Liability Per Pair
BD	-	Business Day
BNS	-	Billed Number Screening
CCSA	-	Common Control Switching Arrangement(s)
CCS/SS7	-	Common Channel Signaling/Signaling System 7
CI	-	Channel Interface
CLLI	-	Common Language Location Identification
CNCC	-	Customer Network Control Center
CO	-	Central Office
COCTX	-	Central Office Centrex
Cont'd	-	Continued
CPN	-	Calling Party Number
CSACC	-	Customer Service Administration Control Center
CSP	-	Carrier Selection Parameter
Ctx	-	Centrex
DA	-	Digital Data Access
dB	-	decibel
DBrnCO	-	Decibel Reference Noise C-Message Weighted O
dc	-	direct current

EXPLANATION OF ABBREVIATIONS

EML	-	Expected Measured Loss
ESS	-	Electronic Switching System
ESSX	-	Electronic Switching System Exchange
EUCL	-	End User Common Line
f	-	frequency
F.C.C.	-	Federal Communications Commission
FX	-	Foreign Exchange
HC	-	High Capacity
Hz	-	Hertz
IC	-	Interexchange Carrier
ICB	-	Individual Case Basis
ILP	-	Initial Liability Period
kbps	-	kilobits per second
kHz	-	kilohertz
LATA	-	Local Access and Transport Area
LDMTS	-	Long Distance Message Telecommunications Service(s)
LIDB	-	Line Information Data Base
Ma	-	milliamperes
Mbps	-	Megabits per second
MHz	-	Megahertz
MOU	-	Minutes of Use
MRC	-	Monthly Recurring Charge
MT	-	Metallic
MTL	-	Maximum Termination Liability
MTS	-	Message Telecommunications Service(s)
MTS/WATS	-	Message Telecommunications Service and/or Wide Area Telecommunications Service
N/A	-	Not Available at this time
NPA	-	Numbering Plan Area
NRC	-	Nonrecurring Charge
NTS	-	Non-Traffic Sensitive
NXX	-	Three Digit Central Office Code

(D)

(D)

(D)

EXPLANATION OF ABBREVIATIONS

OPC	-	Originating Point Code
OSS	-	Operator Service System
PBX	-	Private Branch Exchange
PCM	-	Pulse Code Modulation
PI	-	Priority Installation
PIN	-	Personal Identification Number
PIU	-	Percent Intrastate Usage
PLR	-	Private Line Ringdown
POT	-	Point of Termination
PR	-	Priority Restoration
RC	-	Rate Category
RCCs	-	Radio Common Carriers
RMC	-	Recurring Monthly Charge
rms	-	root-mean-square
SCP	-	Service Control Point
SS7	-	Signaling System 7
SSN	-	Switched Service Network
STP	-	Signal Transfer Point
SWC	-	Serving Wire Center
TES	-	Telephone Exchange Service(s)
TLP	-	Transmission Level Point
TSP	-	Telecommunications Service Priority
TSPS	-	Traffic Service Position System (D)
USOC	-	Uniform Service Order Code
VG	-	Voice Grade
V&H	-	Vertical & Horizontal
WATS	-	Wide Area Telecommunications Service(s)
WCH	-	Wire Center Horizontal
WCV	-	Wire Center Vertical

REFERENCE TO OTHER TARIFFS

Whenever reference is made in this tariff to other tariffs of the Company, the reference is to the tariffs in force as of the effective date of this tariff, and to amendments thereto and successive issues thereof.

1. Application of Tariff

1.1 This tariff contains regulations, rates and charges applicable to the provision of Carrier Common ***Line, Switched*** Access and Special Access Services, and other miscellaneous services, hereinafter referred to collectively as service(s), provided by the Company, to Customer(s). (C)

1.2 The provision of such services by the Company as set forth in this tariff does not constitute a joint undertaking with the customer for the furnishing of any service.

1.3 This tariff pertains to all Intrastate services offered by the Company, to the Customer.

2. General Regulations

2.1 Undertakings of the Company

2.1.1 Scope

(A) Reserved For Future Use

(B) The Company does not undertake to transmit messages under this tariff.

(C) The Company shall be responsible only for the installation, operation and maintenance of the services it provides.

(D) The Company will, for maintenance purposes, test its services only to the extent necessary to detect and/or clear troubles.

(E) Services are provided 24 hours daily, seven days per week, except as set forth in other applicable sections of this tariff.

(F) The Company does not warrant that its facilities and services meet standards other than those set forth in this tariff.

2.1.2 Limitations

(A) The customer may not assign or transfer the use of services provided under this tariff; however, where there is no interruption of use or relocation of the services, such assignment or transfer may be made to:

(1) another customer, whether an individual, partnership, association or corporation, provided the assignee or

2. General Regulations (Cont'd)

2.1 Undertakings of the Company (Cont'd)

2.1.2 Limitations (Cont'd)

(A) (Cont'd)

(1) (Cont'd)

transferee assumes all outstanding indebtedness for such services, and the unexpired portion of the minimum period and the termination liability applicable to such services, if any; or

(2) a court-appointed receiver, trustee or other person acting pursuant to law in bankruptcy, receivership, reorganization, insolvency, liquidation or other similar proceedings, provided the assignee or transferee assumes the unexpired portion of the minimum period and the termination liability applicable to such services, if any.

In all cases of assignment or transfer, the written acknowledgment of the Company is required prior to such assignment or transfer which acknowledgment shall be made within 15 days from the receipt of notification. All regulations and conditions contained in this tariff shall apply to such assignee or transferee.

The assignment or transfer of services does not relieve or discharge the assignor or transferor from remaining jointly or severally liable with the assignee or transferee for any obligations existing at the time of the assignment or transfer.

(B) The installation, use, and restoration of services shall be in accordance with Part 64, Subpart D of the Federal Communications Commission's Rules and Regulations and shall be subject to the regulations set forth in 13.3.9(A) following.

2. General Regulations (Cont'd)

2.1 Undertakings of the Company (Cont'd)

2.1.2 Limitations (Cont'd)

(C) Subject to compliance with the rules mentioned in (B) preceding, the services offered herein will be provided to customers on a first-come, first-served basis.

(D) The use of the Automatic Number Identification (ANI) and Charge Number (CN) optional features shall be subject to the following limitations in accordance with Part 64, Subpart P of the Federal Communications Commission's Rules and Regulations. Any customer that is provided ANI or Charge Number (CN) Service, as offered in 6. following, is:

(1) Permitted to use the telephone number and billing information for billing and collection, routing, screening and completion of the originating telephone subscriber's call or transaction, or for services directly related to the originating telephone subscriber's call or transaction;

(2) Prohibited from reusing or selling the telephone number or billing information without first notifying the originating telephone subscriber and obtaining the affirmative consent of such subscriber for such reuse or sale; and

(3) Prohibited from disclosing any information derived from the ANI or Charge Number (CN) Service, except as permitted by (1) and (2) preceding, for any purpose other than:

- Performing the services or transactions that are the subject of the originating telephone subscriber's call;

- Ensuring network performance security and the effectiveness of call delivery;

- Compiling, using and disclosing aggregate information; and

- Complying with applicable law or legal process.

The above restrictions shall not prevent an ANI or Charge Number (CN) customer from using the telephone number and billing information or information derived from analysis of the characteristics of calls received that include the ANI or Charge Number (CN) information, to offer a product or service that is directly related to the products or services previously purchased by an end user of the ANI or Charge Number (CN) customer.

2. General Regulations (Cont'd)

2.1 Undertakings of the Company (Cont'd)

2.1.3 Liability

(A) The Company's liability, if any, for its willful misconduct is not limited by this Tariff. With respect to any other claim or suit, by a customer or by any others, for damages associated with the installation, provision, termination, maintenance, repair or restoration of service, and subject to the provisions of (B) through ***(L)*** following, the Company's liability, if any, shall not exceed an amount equal to the proportionate charge for the service for the period during which the service be in addition to any amounts that may otherwise be due the customer under this Tariff as a Credit Allowance for a Service Interruption. (T)

(B) The Company shall not be liable for any act or omission of any other Carrier or customer providing a portion of a service, nor shall the Company for its own act or omission hold liable any other Carrier or customer providing a portion of a service.

(C) The Company shall not be liable for any act or omission concerning the implementation of presubscription as set forth in 13.3.3 following, unless the damage is caused by the Company's negligence.

(D) The Company is not liable for damages to the customer premises resulting from the furnishing of a service, including the installation and removal of equipment and associated wiring, unless the damage is caused by the Company's negligence.

2. General Regulations (Cont'd)

2.1 Undertakings of the Company (Cont'd)

2.1.3 Liability (Cont'd)

(E) The Company shall be indemnified, defended and held harmless by the end user against any claim, loss or damage arising from the end user's use of services offered under this tariff, involving:

(1) Claims for libel, slander, invasion of privacy, or infringement of copyright arising from the end user's own communications;

(2) Claims for patent infringement arising from the end user's acts combining or using the service furnished by the Company in connection with facilities or equipment furnished by the end user or IC or;

(3) All other claims arising out of any act or omission of the end user in the course of using services provided pursuant to this tariff.

(F) The Company shall be indemnified, defended and held harmless by the IC against any claim, loss or damage arising from the IC's use of services offered under this tariff, involving:

(1) Claims for libel, slander, invasion of privacy, or infringement of copyright arising from the IC's own communications;

(2) Claims for patent infringement arising from the IC's acts combining or using the service furnished by the Company in connection with facilities or equipment furnished by the end user or IC or;

(3) All other claims arising out of any act or omission of the IC in the course of using services provided pursuant to this tariff.

2. General Regulations (Cont'd)

2.1 Undertakings of the Company (Cont'd)

2.1.3 Liability (Cont'd)

(G) No license under patents (other than the limited license to use) is granted by the Company or shall be implied or arise by estoppel, with respect to any service offered under this tariff. The Company will defend the customer against claims of patent infringement arising solely from the use by the customer of services offered under this tariff and will indemnify such customer for any damages awarded based solely on such claims.

(H) The Company's failure to provide or maintain services under this tariff shall be excused by labor difficulties, governmental orders, civil commotions, criminal actions taken against the Company, acts of God and other circumstances beyond the Company's reasonable control, subject to the Credit Allowance for a Service Interruption as set form in 2.4.4 following.

(I) The Company does not guarantee or make any warranty with respect to its services when used in an explosive atmosphere. The Company shall be indemnified, defended and held harmless by the customer from any and all claims by any person relating to such customer's use of services so provided.

(J) Should any federal, state or local jurisdiction determine that sales, use, gross receipts or any other taxes (including interest, penalties and surcharges thereon) are due by the Company as a result of the Company's purchase of accounts receivable, the Company will advise the customer and the customer shall be liable for any such tax, interest, penalties and surcharge, and the customer shall immediately reimburse the Company the amount of such tax, interest, penalties and surcharge paid by the Company. If the customer disagrees with the Company's determination that any taxes are due by the Company or disagrees with an assessment of any tax, penalty, surcharge and interest due the Company as a result of the Company's purchase of accounts receivable, the customer shall, at its option and expense (including immediate payment of any such assessment), have the right to seek a ruling as to the inapplicability of any such tax or to protest any assessment and participate in any legal challenge to such assessment, but shall be liable for any tax, penalty, surcharge and interest ultimately determined to be due.

2. General Regulations (Cont'd)

2.1 Undertakings of the Company (Cont'd)

2.1.3 Liability (Cont'd)

(K) The Company will not be liable for any consequential, incidental, or indirect damages for any cause of action, whether in contract or tort. Consequential, incidental, and indirect damages include, but are not limited to, lost projects, lost revenues, and loss of business opportunity, whether or not the Company was aware or should have been aware of the possibility of these damages. (N)

(L) The Company will make every reasonable effort to cure any material failure to provide service caused solely by Year 2000 (Y2K) defects in Company hardware, software and systems. Due to the interdependence among telecommunications providers and the interrelationship with non-Company processes, equipment and systems, the Company is not responsible for failures caused by circumstances beyond its control including, but not limited to, failures caused by: (1) the Customer; (2) other telecommunications providers; or (3) customer premises equipment. In addition, the Company does not ensure compatibility between the Company and non-Company services used by the Customer. (N)

2. General Regulations (Cont'd)

2.1 Undertakings of the Company (Cont'd)

2.1.4 Provision of Services

The Company, to the extent that such services are or can be made available with reasonable effort, and after provision has been made for the Company's Telephone Exchange Services, will provide to the customer, upon reasonable notice, services offered in other applicable sections of this tariff at rates and charges specified therein.

2.1.5 Installation and Termination of Services

The Access Services provided under this tariff (A) will include any entrance cable or drop wiring and wire or intrabuilding cable to that point where provision is made for termination of the Company's outside distribution network facilities at a suitable location inside a customer-designated premises and (B) will be installed by the Company to such Point of Termination. Access Service has only one Point of Termination per customer premises. Any additional terminations beyond such Point of Termination are the sole responsibility of the customer. The Point of Termination is an inherent part of Switched and Special Access Services, therefore, the preceding does not preclude the customer's ability to have the Point of Termination moved as set forth in 6.7.7 and 7.4.5 following for Switched and Special Services, respectively.

2. General Regulations (Cont'd)

2.1 Undertakings of the Company (Cont'd)

2.1.6 Maintenance of Services

The services provided under this tariff shall be maintained by the Company. The customer or others may not rearrange, move, disconnect, remove or attempt to repair any facilities provided by the Company, other than by connection or disconnection to any interface means used, except with the written consent of the Company.

2.1.7 Changes and Substitutions

Except as provided for equipment and systems subject to FCC Part 68 Regulations at 47 C.F.R. Section 68.110(b), the Company may, where such action is reasonably required in the operation of its business, (A) substitute, change or rearrange any facilities used in providing service under this tariff, including but not limited to, (1) substitution of different metallic facilities, (2) substitution of carrier or derived facilities for metallic facilities used to provide other than metallic facilities and (3) substitution of metallic facilities for carrier or derived facilities used to provide other than metallic facilities, (B) change minimum protection criteria, (C) change operating or maintenance characteristics of facilities or (D) change operations or procedures of the Company. In case of any such substitution, change or rearrangement, the transmission parameters will be within the range as set forth in 6. and 7. following. The Company shall not be responsible if any substitution, change or rearrangement renders any customer furnished services obsolete or requires modification or alteration thereof or otherwise affects their use or performance. If such substitution, change or rearrangement materially affects the operating characteristics of the facility, the Company will provide reasonable notification to the customer in writing. Reasonable time will be allowed for any redesign and implementation required by the change in operating characteristics. The Company will work cooperatively with the customer to determine reasonable notification requirements.

2. General Regulations (Cont'd)

2.1 Undertakings of the Company (Cont'd)

2.1.8 Refusal and Discontinuance of Service

(A) ***If*** a customer fails to comply with ***the provisions set forth in this tariff***, including any payments to be made by it on the dates and times herein specified, the Company may, on thirty (30) days written notice by Certified U.S. Mail to the person designated by that customer to receive such notice of noncompliance, refuse additional applications for service and/or refuse to complete any pending orders for service by the noncomplying customer at any time thereafter. (C)

If the Company does not refuse additional applications for service on the date specified in the thirty (30) days notice, and the customer's noncompliance continues, nothing contained herein shall preclude the Company's right to refuse additional applications for service to the noncomplying customer without further notice.

(B) ***If*** a customer fails to comply with ***the provisions set forth in this tariff***, including any payments to be made by it on the dates and times herein specified, the Company may, on thirty (30) days written notice by Certified U.S. Mail to the person designated by that customer to receive such notices of non-compliance, discontinue the provision of the services to the noncomplying customer at any time thereafter. In the case of such discontinuance, all applicable charges, including termination charges, shall become due. If the Company does not discontinue the provision of the services involved on the date specified in the thirty (30) days notice, and the customer's noncompliance continues, nothing contained herein shall preclude the Company's right to discontinue the provision of the services to the noncomplying customer without further notice. (C)

2. General Regulations (Cont'd)

2.1 Undertakings of the Company (Cont'd)

2.1.8 Refusal and Discontinuance of Service (Cont'd)

(C) When access service is provided by more than one Telephone Company, the Telephone Companies involved in providing the joint service may individually or collectively deny service to a customer for nonpayment. Where the Telephone Company(s) affected by the nonpayment is incapable of effecting discontinuance of service without the cooperation of the other joint providers of Switched Access Service, such other Telephone Company(s) will, if technically feasible, assist in denying the joint service to the customer. Service denial for such joint service will only include calls originating or terminating within, or transiting, the operating territory of the Telephone Company(s) initiating the service denial for nonpayment. When more than one of the joint providers must deny service to effectuate service discontinuance for nonpayment, and where a conflict exists in the applicable tariff provisions, the regulations of the end office Telephone Company shall apply for joint service discontinuance.

(D) If the National Exchange Carrier Association, Inc., notifies the Company that the customer has failed to comply with Section 8 of the National Exchange Carrier Association, Inc., Tariff F.C.C. No. 5 (Lifeline Assistance and Universal Service Fund charges) including any customer's failure to make payments on the date and times specified therein, the Company may, on thirty days' written notice to the customer by Certified U.S. Mail, take any of the following actions: (1) refuse additional applications for service, (2) refuse to complete any pending orders for service, and/or (3) discontinue the provision of service to the customer. In the case of discontinuance, all applicable charges, including termination charges, shall become due.

2. General Regulations (Cont'd)

2.1 Undertakings of the Company (Cont'd)

2.1.9 Limitation of Use of Metallic Facilities

Signals applied to a metallic facility shall conform to the limitations set forth in Technical Reference Publication ***PUB*** AS No. 1. (C)

2.1.10 Notification of Service-Affecting Activities

The Company will provide the customer reasonable notification of service-affecting activities that may occur in normal operation of its business. Such activities may include, but are not limited to, equipment or facilities additions, removals or rearrangements, routine preventative maintenance and major switching machine change-out. Generally, such activities are not individual customer service specific, they affect many customer services. No specific advance notification period is applicable to all service activities. The Company will work cooperatively with the customer to determine reasonable notification requirements.

2.1.11 Coordination with Respect to Network Contingencies

The Company intends to work cooperatively with the customer to develop network contingency plans in order to maintain maximum network capability following natural or man-made disasters which affect telecommunications services.

2. General Regulations (Cont'd)

2.1 Undertakings of the Company (Cont'd)

2.1.12 Provision and Ownership of Telephone Numbers

The Company reserves the reasonable right to assign, designate or change telephone numbers, any other call number designations associated with Access Services, or the Company serving central office prefixes associated with such numbers, when necessary in the conduct of its business. Should it become necessary to make a change in such number(s), the Company will furnish to the customer 6 months notice, by certified U.S. Mail, of the effective date and an explanation of the reason(s) for such change(s).

2.2 Use

2.2.1 Reserved For Future Use

2.2.2 Interference or Impairment

(A) The characteristics and methods of operation of any circuits, facilities or equipment provided by other than the Company and associated with the facilities utilized to provide services under this tariff shall not interfere with or impair service over any facilities of the Company, its affiliated companies, or its connecting and concurring carriers involved in its services, cause damage to their plant, impair the privacy of any communications carried over their facilities or create hazards to the employees of any of them or the public.

(B) Except as provided for equipment or systems subject to the FCC Part 68 Rules in 47 C.F.R. Section 68.108, if such characteristics or methods of operation are not in accordance with (A) preceding, the Company will,

2. General Regulations (Cont'd)

2.2 Use (Cont'd)

2.2.2 Interference or Impairment (Cont'd)

(B) (Cont'd)

where practicable, notify the customer that temporary discontinuance of the use of a service may be required; however, where prior notice is not practicable, nothing contained herein shall be deemed to preclude the Company's right to temporarily discontinue forthwith the use of a service if such action is reasonable under the circumstances. In case of such temporary discontinuance, the customer will be promptly notified and afforded the opportunity to correct the condition ***that*** gave rise to the temporary (T) discontinuance. During such period of temporary discontinuance, credit allowance for service interruptions as set ***forth*** in 2.4.4(A) and (B) following is (Z) not applicable.

2.2.3 Unlawful Use

The service provided under this tariff shall not be used for an unlawful purpose.

2.3 Obligations of the Customer

2.3.1 Damages

The customer shall reimburse the Company for damages to Company facilities utilized to provide services under this tariff caused by the negligence or willful act of the customer, or resulting from the customer's improper use of the Company facilities, or due to malfunction of any facilities or equipment provided by other than the Company. Nothing in the foregoing provision shall be interpreted to hold one customer liable for another customer's actions. The Company will, upon reimbursement for damages, cooperate with the customer in prosecuting a claim against the person causing such damage and the customer shall be subrogated to the right of recovery by the Company for the damages to the extent of such payment.

2. General Regulations (Cont'd)

2.3 Obligations of the Customer (Cont'd)

2.3.2 Ownership of Facilities and Theft

Facilities utilized by the Company to provide service under the provisions of this tariff shall remain the property of the Company. Such facilities shall be returned to the Company by the customer, whenever requested, within a reasonable period following the request in as good condition as reasonable wear will permit.

2.3.3 Equipment Space and Power

The customer shall furnish or arrange to have furnished to the Company, at no charge, equipment space and electrical power required by the Company to provide services under this tariff at the points of termination of such services. The selection of ac or dc power shall be mutually agreed to by the customer and the Company. The customer shall also make necessary arrangements in order that the Company will have access to such spaces at reasonable times for installing, testing, repairing or removing Company Services.

2.3.4 Reserved For Future Use

2. General Regulations (Cont'd)

2.3 Obligations of the Customer (Cont'd)

2.3.5 Reserved For Future Use

2.3.6 Availability for Testing

The services provided under this tariff shall be available to the Company at times mutually agreed upon in order to permit the Company to make tests and adjustments appropriate for maintaining the services in satisfactory operating condition. Such tests and adjustments shall be completed within a reasonable time. No credit will be allowed for any interruptions involved during such tests and adjustments.

2.3.7 Balance

All signals for transmission over the services provided under this tariff shall be delivered by the customer balanced to ground except for ground start, duplex (DX) and McCulloh-Loop (Alarm System) type signaling. (D)
(D)

2.3.8 Design of Customer Services

Subject to the provisions of 2.1.7 preceding, the customer shall be solely responsible, at its own expense, for the overall design of its services and for any redesigning or rearrangement of its services which may be required because of changes in facilities, operations or procedures of the Company, minimum protection criteria or operating or maintenance characteristics of the facilities.

2. General Regulations (Cont'd)

2.3 Obligations of the Customer (Cont'd)

2.3.9 References to the Company

The customer may advise end users that certain services are provided by the Company in connection with the service the customer furnishes to end users; however, the customer shall not represent that the Company jointly participates in the customer's services.

2.3.10 Reserved For Future Use

2.3.11 Claims and Demands for Damages

(A) With respect to claims of patent infringement made by third persons, the customer shall defend, indemnify, protect and save harmless the Company from and against all claims arising out of the combining with, or use in connection with, the services provided under this tariff, any circuit, apparatus, system or method provided by the customer.

(B) The customer shall defend, indemnify and save harmless the Company from and against any suits, claims, losses or damages, including punitive damages, attorney fees and court costs by third persons arising out of the construction, installation, operation, maintenance, or removal of the customer's circuits, facilities, or equipment connected to the Company's services provided under this tariff, including, without limitation, Workmen's Compensation claims, actions for infringement of copyright and/or unauthorized use of program material, libel and slander actions based on the content of communications transmitted over the customer's circuits, facilities or equipment, and proceedings to recover taxes, fines, or penalties for failure of the customer to obtain or maintain

2. General Regulations (Cont'd)

2.3 Obligations of the Customer (Cont'd)

2.3.11 Claims and Demands for Damages (Cont'd)

(B) (Cont'd)

in effect any necessary certificates, permits, licenses, or other authority to acquire or operate the services provided under this tariff; provided, however, the foregoing indemnification shall not apply to suits, claims, and demands to recover damages for damage to property, death, or personal injury unless such suits, claims or demands are based on the tortuous conduct of the customer, its officers, agents or employees.

(C) Reserved For Future Use

(D) The customer shall defend, indemnify and save harmless the Company from and against any suits, claims, losses or damages, including punitive damages, attorney fees and court costs by the customer or third parties arising out of any act or omission of the customer in the course of using services provided under this tariff.

2.3.12 Sectionalization - Trouble Reporting

The customer will be responsible for reporting troubles, sectionalized to Company facilities and/or equipment. When troubles cannot be clearly sectionalized to the Company facilities and/or equipment, the Company will test cooperatively or independently to assist in trouble sectionalization. Additional charges, as set forth in 13. following, are applicable for cooperative or independent testing performed by the Company.

2. General Regulations (Cont'd)

2.3 Obligations of the Customer (Cont'd)

2.3.13 Coordination with Respect to Network Contingencies

The customer shall, in cooperation with the Company, coordinate in planning the actions to be taken to maintain maximum network capability following natural or man-made disasters which affect telecommunications services.

2.3.14 Jurisdictional Report Requirements

(A) ***Percent Interstate Usage (PIU)*** (C)

(M)

(***1***) Pursuant to Federal Communications Commission order F.C.C. 85-145 adopted April 16, 1985, interstate usage is to be developed as though every call that enters a customer network at a point within the same state as that in which the called station (as designated by the called station number) is situated is an intrastate communication and every call for which the point of entry is in a state other than that where the called station (as designated by the called station number) is situated is an interstate communication. (T)

(***2***) The projected interstate percentages will be used by the Company to apportion the usage between interstate and intrastate until a revised report is received as set forth in ***(B)***(7) following (T) (T)

(B) Jurisdictional Reports (T)

When the Company receives sufficient call detail to permit it to determine the jurisdiction of originating and terminating access minutes of use, the Company will bill using a PIU factor developed from these actual minutes of use and will not use the customer provided PIU factors provided as set forth in (1) through (10) following. (N)

The Company developed PIU for access minutes of use will be determined at a statewide level. When the access minutes are measured, the interstate percentage will be developed on a quarterly basis by dividing the measured interstate originating or terminating access minutes (the access minutes where the calling number is in one state and the called number is in another state) by the total measured originating or terminating access minutes. The Company will begin to utilize the Company developed PIU factor as soon as sufficient call detail is available and will implement subsequent Company developed PIU factors on a quarterly basis in accordance with the provisions set forth in (7) following.

(N)

(M) ***Material previously appearing on this page now appears on Page 41.***

2. General Regulations (Cont'd)

2.3 Obligations of the Customer (Cont'd)

2.3.14 Jurisdictional ***Report*** Requirements (Cont'd) (T)

(B) Jurisdictional Reports (Cont'd) (T)

When the Company receives insufficient call detail to determine the jurisdiction, the Company will apply the customer's projected PIU factor, provided as set forth in (1) through (10) following, to apportion the usage between interstate and intrastate. (N) (N)

(1) When a customer orders Feature Group A, Feature Group B, 500 Access Service and/or Toll Free Code (TFC) Access Service, the customer shall state in its order the projected interstate percentage for interstate usage for each Feature Group A, Feature Group B, 500 Access Service and/or TFC Access Service ordered. If the customer discontinues some but not all of the Feature Group A, Feature Group B, 500 Access Service and/or TFC Access Services in a group, it shall provide an updated projected interstate percentage for the remaining services in the group. Additionally, upon employing the 700 access code over Feature Group D, the customer must provide a projected interstate percentage for the 700 calls. If the customer fails to provide a 700 projected interstate percentage, a default percentage of 100% interstate will be assumed. (T) (M) (M)

(2) For single connection arrangements, the interstate Feature Group A, Feature Group B, and/or TFC Access Service information reported as set forth in (1) preceding will be used to determine the charges. The number of access minutes (either the measured minutes or the assumed minutes) for a connection will be multiplied by the projected interstate percentage to develop the interstate access minutes. The number of access minutes for the connection minus the developed interstate access minutes for the connection will be the developed intrastate access minutes.

(3) For multiline hunt group or trunk group arrangements, the interstate Feature Group A, Feature Group B, and/or TFC Access Service information reported as set forth in (1) preceding will be used to determine the charges. The number of access minutes (either the measured minutes or the assumed minutes) for a service will be multiplied by the projected interstate percentage to develop the interstate access minutes. The number of access minutes for the service minus the developed interstate access minutes for the service will be the developed intrastate access minutes.

(M) Material now appearing on this page previously appeared on Fifth Revised Page 40.

2. General Regulations (Cont'd)

2.3 Obligations of the Customer (Cont'd)

2.3.14 Jurisdictional Report Requirements (Cont'd)

(B) Jurisdictional Reports (Cont'd)

(4) When a customer orders Feature Group C, Feature Group D, TFC or 900 Access Services, the projected interstate percentage will be determined as set forth in (a) through (c) following:

(a) For originating Feature Group C and originating Feature Group D used in the provision of MTS/MTS-like service, the Company will determine the projected interstate percentage of use from the call detail.

(b) For terminating Feature Group C used in the provision of MTS/MTS-like service, and terminating Feature Group C used in the provision of 900 service, the projected interstate percentage of use will be determined through the application of ***terminating to originating (T/O)*** factors as set forth in Section 6.7.8 following. (T)

(c) For terminating Feature Group D used in the provision of MTS/MTS-like service, terminating Feature Group D used in the provision of 900 service, originating Feature Group C and Feature Group D used in the provision of 900 service, and originating and terminating Feature Group D used in the provision of Toll Free Code (TFC) Service, the customer shall provide the projected interstate usage percentage in its Access Service Order. In the event the customer fails to provide a projected interstate percentage, the Company will determine the projected interstate percentage as follows:

2. General Regulations (Cont'd)

2.3 Obligations of the Customer (Cont'd)

2.3.14 Jurisdictional ***Report*** Requirements (Cont'd) (T)

(B) Jurisdictional Reports (Cont'd) (T)

(4) ***When a Customer …*** (Cont'd) (T)

(c) ***For terminating Feature …*** (Cont'd) (T)

For originating access minutes, the projected interstate percentage will be developed on a monthly basis when the Feature Group C or Feature Group D Switched Access Service minutes are measured by dividing the measured interstate originating minutes (the minutes where the calling number is in one state and the called number is in another state) by the total originating minutes when the call detail is adequate to determine the appropriate jurisdiction.

For terminating access minutes, the data used by the Company to develop the projected interstate percentage for originating access minutes will be used to develop projected interstate percentage for such terminating access minutes.

When originating call details are insufficient to determine the jurisdiction for the call, the prior month's projected interstate percentage shall be used by the Company as the projected interstate percentage for originating and terminating access minutes. The projected intrastate percentage of use will be obtained by subtracting the projected interstate percentage for originating and terminating access minutes from 100 (i.e., 100 - interstate percentage = intrastate percentage). (M) (M)

(M) Material now appearing on this page previously appeared on Third Revised Page 44.

2. General Regulations (Cont'd)

2.3 Obligations of the Customer (Cont'd)

2.3.14 Jurisdictional ***Report*** Requirements (Cont'd) (T)

(B) Jurisdictional Reports (Cont'd) (T)

(M)

(5) When a customer orders Directory Assistance Service, the customer shall state in its order the projected interstate percentage for terminating use for each Directory Access Service group ordered. (A method the customer may wish to adopt could be to use its terminating traffic from its premises to the involved Directory Assistance Location and calculate the projected interstate percentage as set forth in (4) preceding.) The Company will designate the number obtained by subtracting the projected interstate percentage furnished by the customer from 100 (100 - customer provided interstate percentage = intrastate percentage) as the projected intrastate percentage of use.

(M) Material previously appearing on this page now appears on Page 43.

2. General Regulations (Cont'd)

2.3 Obligations of the Customer (Cont'd)

2.3.14 Jurisdictional ***Report*** Requirements (Cont'd) (T)

(B) Jurisdictional Reports (Cont'd) (T)

(6) Except where Company measured access minutes are used as set forth in (4) preceding, the customer reported number of interstate services or interstate percentage of use as set forth in (1), (4), or (5) preceding will be used until the customer reports a different projected interstate percentage for an in service end office. When the customer adds or discontinues lines or trunks to an existing end office, the customer shall furnish an updated projected ***interstate*** percentage that applies to the end office. The revised report will serve as the basis for future billing and will be effective on the next bill date. No prorating or back billing will be done based on the report. (T)

(7) Effective on the first of January, April, July, and October of each year, the customer shall provide a revised jurisdictional report showing the interstate and intrastate percentage of use for the last three months ending the last day of December, March, June, and September, respectively, for each service arranged for interstate use. The customer shall forward the revised report to the Company, to be received no later than fifteen (15) days after the first of each such month, (i.e., January, April, July, and October). The revised report will serve as the basis for the next three (3) months billing (i.e., beginning the first of February, May, August, and November) and will be effective on the customer's bill date for that service. No prorating or back billing will be done based on the report. (T)

If the customer does not supply the revised reports, the Company will assume the percentages to be the same as those provided in the last quarterly report. For those cases in which a quarterly report has never been received from the customer, the Company will assume the percentages to be the same as those provided in the order for service as set forth in (1), (4), and (5) preceding.

2. General Regulations (Cont'd)

2.3 Obligations of the Customer (Cont'd)

2.3.14 Jurisdictional ***Report*** Requirements (Cont'd) (T)

(B) Jurisdictional Reports (Cont'd) (T)

(8) When a customer orders Common Channel Signaling/Signaling System 7 (CCS/SS7) Interconnection Service, the customer shall provide to the Company in its order for the service, a CCS/SS7 Interconnection Service Percent Interstate Usage ***(PIU)*** Report. (T)

Customers who provide the CCS/SS7 Interconnection Service PIU Report shall supply the Company with an interstate percentage, of zero (0) through one hundred (100), per Signaling Transfer Point (STP) Port Termination. This STP Port Termination PIU will be an average PIU based upon the jurisdiction (interstate versus intrastate) of those originating end user calls that require use of the specified STP Port Termination for signaling purposes.

The PIU provided by the customer for the STP Port Termination will be used by the Company to determine the jurisdiction (interstate versus intrastate) of the customer's STP Access Mileage Charges.

2. General Regulations (Cont'd)

2.3 Obligations of the Customer (Cont'd)

2.3.14 Jurisdictional ***Report*** Requirements (Cont'd) (T)

(B) Jurisdictional Reports (Cont'd) (T)

(8) ***When a customer …*** (Cont'd) (T)

The CCS/SS7 Interconnection Service PIU must be provided to the Company upon ordering service, and thereafter, on a quarterly basis. Provisions for updating the interstate and intrastate jurisdictional report as specified in 2.3.14(***B***)(7) preceding will also apply ***for*** updating the CCS/SS7 Interconnection Service PIU Report. The Company will utilize the quarterly CCS/SS7 Interconnection Service PIU Report for the STP Port Termination to update the STP Access Mileage PIU effective on the bill date for the service. (T)

Verification provisions as specified in 2.3.14(***C***) following will also apply to the CCS/SS7 Interconnection Service PIU Report. (T)

(9) When a customer orders Line Information Data Base (LIDB) Access Service, the customer shall in its order provide to the Company a LIDB Access Service Percent Interstate Usage (PIU) Report.

Customers who provide the LIDB Access Service PIU Report shall supply the Company with an interstate percentage per originating point code (OPC) ordered. The LIDB Access Service PIU will be an average PIU based upon the jurisdiction (interstate versus intrastate) of those originating end user calls for which the Company LIDB is being queried.

The LIDB Access Service PIU Report must be provided to the Company upon ordering service, and thereafter, on a quarterly basis. Provisions for updating the interstate and intrastate jurisdictional report are as specified in ***2.3.14(B)(7), and*** will also apply for the LIDB Access Service PIU Report. (T)

Verification provisions as specified in 2.3.14(***C***) will also apply for LIDB Access Service PIU Report. (T)

2. General Regulations (Cont'd)

2.3 Obligations of the Customer (Cont'd)

2.3.14 Jurisdictional ***Report*** Requirements (Cont'd) (T)

(B) Jurisdictional Reports (Cont'd) (T)

(10) Entrance Facility and Direct-Trunked Transport

Entrance Facility and Direct-Trunked Transport will be made available on September 5, 1996 in conformance with the restructure of Local Transport. In order to provide these new services on September 5, 1996, customers of Switched Access ***s***ervices must provide new PIU (T)
factors that reflect all Switched Access ***s***ervices using these (T)
restructured facilities.

(a) When an Entrance Facility is provided for both interstate and intrastate Switched Access, the customer must provide a Switched Access Entrance Facility PIU factor on a serving wire center or study area level. The Entrance Facility PIU must account for all Switched Access originating and terminating usage carried over the Entrance Facility.

(b) When Direct-Trunked Transport is provided for both interstate and intrastate Switched Access, the customer must provide a Switched Access Direct-Trunked Transport PIU factor on a study area level. The Direct-Trunked Transport PIU must account for all Switched Access originating and terminating usage carried over the Direct-Trunked Transport facilities.

(c) If the customer does not provide a Switched Access PIU factor for an Entrance Facility or Direct-Trunked Transport as set forth in (a) and (b) preceding, the Company will develop a PIU for the Entrance Facility and Direct-Trunked Transport using the most current representative period.

2. General Regulations (Cont'd)

2.3 Obligations of the Customer (Cont'd)

2.3.14 Jurisdictional ***Report*** Requirements (Cont'd) (T)

(B) Jurisdictional Reports (Cont'd) (T)

(10) Entrance Facility and Direct-Trunked Transport (Cont'd)

The Entrance Facility and Direct-Trunked Transport PIU Report must be provided to the Company upon ordering service, and thereafter, on a quarterly basis. Provisions ***for*** updating the interstate and intrastate (T)
jurisdictional report as specified in 2.3.14(***B***)(7) preceding will also apply (T)
for the Entrance Facility and Direct-Trunked Transport PIU Report.

Verification provisions as specified in 2.3.14(***C***) following will also apply (T)
for the Entrance Facility and Direct-Trunked Transport PIU Report.

2. General Regulations (Cont'd)

2.3 Obligations of the Customer (Cont'd)

2.3.14 Jurisdictional ***Report*** Requirements (Cont'd) (T)

(C) Jurisdictional Report Verification (T)

If ***the Company*** disputes the reasonableness of the PIU provided by the customer as (T)
set forth in ***(B)*** preceding, or the reported PIU varies by more than ***five*** percentage
points over the preceding PIU, ***the Company*** may ask the customer to provide the (T)
data used by the customer to determine the projected interstate percentage. The
customer shall retain, for a minimum of one year, accurate call detail records from
which the percentage of interstate and intrastate use can be derived, and shall make
such records available for inspection as reasonably necessary for PIU verification.
Such records shall be made available for inspection and audit within 15 days of ***the*** (T)
Company's request for verification. (T)

The Company shall limit audits to ***no more than*** one per year, except where (T)
additional audits may be required to verify allocation changes which represent a ***five*** (T)
percent shift from the customer's most recent reported figures, and such change is
not the result of seasonal shifts or other identifiable reasons. The customer may
request that verification audits be conducted by an independent auditor. In such
cases, the associated auditing expenses will be paid by the customer.

In the event that the customer fails to provide adequate records to enable ***the*** (T)
Company or an independent auditor to conduct an audit verifying the customer's
PIU, ***the Company*** will bill the usage for all the contested periods using the PIU (T)
reported by the customer for the previous period. This PIU will remain in effect until
the customer provides the call detail records from which the percentage of interstate
and intrastate use can be derived. No prorating or back billing will be done based on
the newly derived factor.

2. General Regulations (Cont'd)

2.3 Obligations of the Customer (Cont'd)

2.3.15 Determination of Intrastate Charges for Mixed Interstate and Intrastate Access Service, CCS/SS7 Interconnection Service and/or LIDB Access Service

When mixed interstate and intrastate Access Service, CCS/SS7 Interconnection Service and/or LIDB Access Service is provided, all charges (i.e., nonrecurring, monthly and/or usage) including optional features charges, will be prorated between interstate and intrastate, except for those charges associated with 900 Access Service. The percentage provided in the reports as set for in ***2.3.14*** (C)
preceding will serve as the basis for prorating the charges. The percentage of an Access Service to be charged as intrastate is applied in the following manner:

(A) For monthly and nonrecurring chargeable rate elements (excluding 900 Access Service as set forth in 6.8.5) multiply the percent intrastate use times the quantity of chargeable elements times the stated tariff rate per element.

(B) For usage sensitive (i.e., access minutes, calls and queries) chargeable rate elements, multiply the percent intrastate use times actual use (i.e., measured or Company assumed average use) times the stated tariff rate.

The intrastate percentage will change as revised usage reports are submitted as set forth in 2.3.14 preceding.

2.4 Payment Arrangements and Credit Allowances

2.4.1 Payment of Rates, Charges and Deposits

(A) The Company will, in order to safeguard its interests, only require a customer which has a proven history of late payments to the Company or does not have established credit, to make a deposit prior to or at any time after the provision of a service to the customer to be held by the Company as a guarantee of

2. General Regulations (Cont'd)

2.4 Payment Arrangements and Credit Allowances (Cont'd)

2.4.1 Payment of Rates, Charges and Deposits (Cont'd)

(A) (Cont'd)

the payment of rates and charges. No such deposit will be required of a customer which is a successor or a company which has established credit and has no history of late payments to the Company. Such deposit may not exceed the actual or estimated rates and charges for the service for a two-month period. The fact that a deposit has been made in no way relieves the customer from complying with the Company's regulations as to prompt payment of bills. At such time as the provision of the service to the customer is terminated, the amount of the deposit will be credited to the customer's account and any credit balance which may remain will be refunded.

Such a deposit may be refunded or credited to the account when the customer has established credit or, in any event, after the customer has established a one-year prompt payment record at any time prior to the termination of the provision of the service to the customer. In case of a cash deposit, for the period the deposit is held by the Company, the customer will receive interest at the same percentage rate as that set forth in (B)(3)(b)(I) or in (B)(3)(b)(II) following, whichever is lower. The rate will be compounded daily for the number of days from the date the customer deposit is received by the Company to and including the date such deposit is credited to the customer's account or the date the deposit is refunded by the Company. Should a deposit be credited to the customer's account, as indicated above, no interest will accrue on the deposit from the date such deposit is credited to the customer's account.

2. General Regulations (Cont'd)

2.4 Payment Arrangements and Credit Allowances (Cont'd)

2.4.1 Payment of Rates, Charges and Deposits (Cont'd)

(B) The Company shall bill on a current basis all charges incurred by and credits due to the customer under this Tariff attributable to services, including, but not limited to, Maintenance of Service as set forth in 13.3.1 following, established or discontinued during the preceding billing period. In addition, the Company shall bill in advance charges for all services to be provided during the ensuing billing period (e.g., Special Access and Switched Access Entrance Facility, Direct-Trunked Transport and Multiplexing) except for charges associated with service usage (***e.g.,Tandem-Switched*** Transport ***and*** Local Switching and for the Federal Government which will be billed in arrears. The bill day (i.e., the billing date of a bill for a customer for Access Service under this Tariff), the period of service each bill covers and the payment date will be as follows: (C)

(1) For End User Access Service and Presubscription, the Company will establish a bill day each month for each end user account. The bill will cover End User Access Service Charges for the ensuing billing period except for End User Access Service for the Federal Government which will be billed in arrears. Any applicable Presubscription Charges, any known unbilled charges for prior periods and any known unbilled adjustments for prior periods for End User Access Service and Presubscription Service will be applied to this bill. Such bills are due when rendered.

(2) For Service other than End User Service and Presubscription, the Company will establish a bill day each month for each customer account. The bill will cover charges for the billing period for which the bill is rendered, plus any known unbilled charges and adjustments for prior periods. The billing period for usage shall be the last bill day through one (1) day before the current bill day. Payment for such bills is due as set forth in (3) following. If payment is not received by the payment date, as set forth in (3) following in immediately available funds, a late payment penalty will apply as set forth in (3) following.

2. General Regulations (Cont'd)

2.4 Payment Arrangements and Credit Allowances (Cont'd)

2.4.1 Payment of Rates, Charges and Deposits (Cont'd)

(B) (Cont'd)

(3) (a) All bills dated as set forth in (2) preceding for service, other than End User Access Service and Presubscription, provided to the customer by the Company are due 31 days (payment date) after the billing date, and are payable in immediately available funds. In the event that the Company renders the bill more than seven (7) days after the normal billing date, the Company will extend the payment date by one day for each day in excess of seven (7) until the bill is rendered. The date the bill is rendered will be considered to be the date the bill is postmarked. If such payment date would cause payment to be due on a Saturday, Sunday or Holiday (i.e., New Year's Day, Independence Day, Labor Day, Thanksgiving Day, Christmas Day, the second Tuesday in November and a day when Washington's Birthday, Memorial Day or Columbus Day is legally observed), payment for such bills will be due from the customer as follows:

If such payment date falls on a Sunday or on a Holiday which is observed on a Monday, the payment date shall be the first non-Holiday day following such Sunday or Holiday. If such payment date falls on a Saturday or on a Holiday which is observed on Tuesday, Wednesday, Thursday or Friday, the payment date shall be the last non-Holiday day preceding such Saturday or Holiday.

(b) Further, if any portion of the payment is received by the Company after the payment date as set forth in (a) preceding, or if any portion of the payment is received by the Company in funds which are not immediately available to the Company, then a late payment interest charge shall be due to the Company. The late payment interest shall be the portion of the payment not received by the payment date times an interest factor. The interest factor shall be the lesser of:

2. General Regulations (Cont'd)

2.4 Payment Arrangements and Credit Allowances (Cont'd)

2.4.1 Payment of Rates, Charges and Deposits (Cont'd)

(B) The Company shall bill … (Cont'd)

(3) (b) Further, if any portion … (Cont'd)

(I) the highest interest rate (in decimal value) which may be levied by law for commercial transactions, compounded daily for the number of days from the payment date to and including the date that the customer actually makes the payment to the Company, or

(II) 0.000329 per day, compounded daily for the number of days ***from*** the payment date to ***and*** including the date that the customer actually makes the payment to the Company. (Z)

(c) In the event that a billing dispute concerning any charges billed to the customer by the Company is resolved in favor of the Company, any payments withheld pending settlement of the dispute shall be subject to the late payment penalty set for in (b) preceding. If the customer disputes the bill on or before the payment date, and pays the undisputed amount on or before the payment date, any late payment charge for the disputed amount will not start until 10 working days after the payment date. If the billing dispute is resolved in favor of the customer, no late payment penalty will apply to the disputed amount. In addition, if a customer who has paid the total billed amount disputes the billed amount within six months of the payment date, as set forth in (a) preceding, and the billing dispute is resolved in favor of the customer,

2. General Regulations (Cont'd)

2.4 Payment Arrangements and Credit Allowances (Cont'd)

2.4.1 Payment of Rates, Charges and Deposits (Cont'd)

(B) (Cont'd)

(3) (Cont'd)

(c) (Cont'd)

the customer shall be entitled to the principal amount of such overpayment plus a penalty amount, calculated from the date upon which notice of the disputed amount was received by the Company to the date of reimbursement. The disputed amount penalty shall be the disputed amount resolved in the customer's favor times a penalty factor. The penalty factor shall be the lessor of:

(I) the highest interest rate (in decimal value) which may be levied by law for commercial transactions, compounded daily for the number of days from the first date to and including the last date of the period involved, or

(II) 0.000329 per day, compounded daily for the number of days from the first date to and including the last date of the period involved.

(d) In the event of a dispute concerning withheld payment amounts or overbilling, the customer shall notify the Company in writing at the earliest possible date, but in no event later than the normal payment date if the dispute concerns withheld payment amounts, or no later than six months after the payment date if the dispute concerns a claim for overbilling. The Company shall respond no later than 15 working days, or other mutually agreed period, from the date of receipt of the notice of dispute. Such response shall state agreement or disagreement with the customer's position and, if disagreement, shall state clearly the reasons for such disagreement.

2. General Regulations (Cont'd)

2.4 Payment Arrangements and Credit Allowances (Cont'd)

2.4.1 Payment of Rates, Charges and Deposits (Cont'd)

(C) Adjustments for the quantities of services established or discontinued in any billing period beyond the minimum period set forth for services in other sections of this tariff will be prorated to the number of days or major fraction of days based on a 30-day month.

(D) The Company will furnish sufficient supporting detail (e.g., type of charge, service type, invoice number, account number, adjustments and payments) with bills rendered for access services to enable the customer to verify the accuracy of such bills.

2. General Regulations (Cont'd)

2.4 Payment Arrangements and Credit Allowances (Cont'd)

2.4.1 Payment of Rates, Charges and Deposits (Cont'd)

(E) When a rate as set forth in this tariff is shown to more than two decimal places, the charges will be determined using the rate shown. The resulting amount will then be rounded to the nearest penny (i.e., rounded to two decimal places).

(F) When more than one copy of a customer bill for services provided under the provisions of this tariff is furnished to the customer, an additional charge applies for each additional copy of the bill as set forth in ***Section*** 13.3.6 following. (T)

2.4.2 Minimum Period

The minimum period for which services are provided and for which rates and charges are applicable is one month except for those services set forth in ***Sections*** (C)
5.2.5(B) and (C), ***6.2.9***, 6.7.2, 7.4.4, ***8.1.5(B), 8.3.5(A)***, and ***13.3.5 following*.** (C)

The minimum period for which service is provided and for which rates and charges are applicable for a Specialized Service or Arrangement provided on an individual case basis, as set forth in ***Section*** 12 following, is one month unless a different minimum period is established with the individual case filing. (T)

When a service is discontinued prior to the expiration of the minimum period, charges are applicable, whether the service is used or not, as follows:

2. General Regulations (Cont'd)

2.4 Payment Arrangements and Credit Allowances (Cont'd)

2.4.2 Minimum Period (Cont'd)

(A) When a service with a one month minimum period is discontinued prior to the expiration of the minimum period, a one month charge will apply at the rate level in effect at the time service is discontinued.

(B) When a service with a minimum period greater than one month is discontinued prior to the expiration of the minimum period, the applicable charge will be the lesser of (1) the Company's total nonrecoverable costs less the net salvage value for the discontinued service or (2) the total monthly charges, at the rate level in effect at the time service is discontinued, for the remainder of the minimum period.

2.4.3 Cancellation of an Order for Service

Provisions for the cancellation of an Access Order for Switched Access or Special Access service are set forth in 5.2.2(B) and 5.2.3 following.

2.4.4 Credit Allowance for Service Interruptions

(A) General

A service is interrupted when it becomes unusable to the customer because of a failure of a facility component used to furnish service under this tariff or in the event that the protective controls applied by the Company result in the complete loss of service by the customer as set forth in 6.5.1 following. For (T)
Special Access (Digital Data Access and High Capacity) services, any period (T)
during which the error performance is below that specified for the service will be considered as an interruption. Except as otherwise provided, an interruption period starts when an inoperative service is reported to the Company, and ends when the service is operative.

For purposes of administering the following regulations, a “major fraction” means more than half of the incremental credit period using the unit of time in which the service interruption is measured, i.e., 30 seconds, 5 minutes. For example, a major fraction for a 30-minute period equals 16 minutes and for a 5 minute period equals 2 minutes and 31 seconds.

2. General Regulations (Cont'd)

2.4 Payment Arrangements and Credit Allowances (Cont'd)

2.4.4 Credit Allowance for Service Interruptions (Cont'd)

(B) When A Credit Allowance Applies

In case of an interruption to any service, allowance for the period of interruption, if not due to the negligence of the customer, shall be as follows:

(1) For the following services, no credit shall be allowed for an interruption of less than thirty minutes.

Switched Access Voice Grade ***and STS1*** Entrance Facilit***ies*** (C)
Switched Access Voice Grade ***and STS1*** Direct-Trunked Transport (C)
Switched Access OptiPoint Services
Special Access Voice Grade Services
Special Access Digital Data Services
Special Access Fractional DS1 Services

The customer shall be credited for an interruption of thirty minutes or more at the rate of 1/1440 of the monthly charges for the facility or service for each period of thirty minutes or major fraction thereof that the interruption continued from the time that an interruption period starts.

The monthly charges used to determine the credit shall be as follows:

(a) For two-point services, the monthly charge shall be the total of all monthly rate element charges associated with the service (i.e., Service Termination(s), Channel Mileage, Optional Features and Functions, and, when applicable, Surcharge for Special Access Service).

(b) For multipoint services, the monthly charge shall be the total of all the monthly rate element charges associated with that portion of the service that is inoperative between the Hub and a customer premises (i.e., Service Termination(s), Channel Mileage, Optional Features and Functions, and, when applicable, Surcharge for Special Access Service).

2. General Regulations (Cont'd)

2.4 Payment Arrangements and Credit Allowances (Cont'd)

2.4.4 Credit Allowance for Service Interruptions (Cont'd)

(B) When A Credit Allowance Applies (Cont'd)

(1) (Cont'd)

(c) For multiplexed services, the monthly charge shall be the total of all the monthly rate element charges associated with that portion of the service that is inoperative. When the facility which is multiplexed or the multiplexer itself is inoperative, the monthly charge shall be the total of all the monthly rate element charges associated with the service (i.e., Service Termination(s), Channel Mileage, optional features and functions, and, when applicable, surcharge for Special Access Service). When the service which rides a channel of the multiplexed facility is inoperative, the monthly charge shall be the total of all the monthly rate element charges associated with that portion of the service from the Hub to a customer premises (i.e., Service Termination(s), Channel Mileage, optional features and functions, and, when applicable, surcharge for Special Access Service).

2. General Regulations (Cont'd)

2.4 Payment Arrangements and Credit Allowances (Cont'd)

2.4.4 Credit Allowance for Service Interruptions (Cont'd)

(B) When A Credit Allowance Applies (Cont'd)

(2) Reserved For Future Use

2. General Regulations (Cont'd)

2.4 Payment Arrangements and Credit Allowances (Cont'd)

2.4.4 Credit Allowance for Service Interruptions (Cont'd)

(B) When A Credit Allowance Applies (Cont'd)

(3) For Switched Access Service ***(excluding Entrance Facilities and Direct Trunked Transport)*** and Directory Assistance Service, credit allowances for interruptions apply only to the applicable monthly rates or the assumed minutes of use charge, whichever is applicable to the service involved. No credit shall be allowed for an interruption of less than 24 hours. The customer shall be credited for an interruption of 24 hours or more at the rate of 1/30 of any applicable monthly rate or assumed minutes of use charge for each period of 24 hours or major fraction thereof that the interruption continues. (C) (C)

(4) The credit allowance(s) for an interruption or for a series of interruptions shall not exceed any applicable monthly rate or assumed minutes of use charge for the service interrupted in any one monthly billing period.

(5) ***Reserved For Future Use*** (T)

(6) Service interruptions for Specialized Service or Arrangements provided under the provisions of 12. following shall be administered in the same manner as those set forth in this section (2.4.4) unless other regulations are specified with the individual case filing.

2. General Regulations (Cont'd)

2.4 Payment Arrangements and Credit Allowances (Cont'd)

2.4.4 Credit Allowance for Service Interruptions (Cont'd)

(B) When A Credit Allowance Applies (Cont'd)

(7) Reserved for Future Use

(8) Service Performance Maintenance Guarantee

For the following services, no credit shall be allowed for an interruption of less than thirty minutes.

Switched Access DS1 Entrance Facility (Z)
Switched Access DS1 Direct-Trunked Transport
Switched Access DS3 Entrance Facility
Switched Access DS3 Direct-Trunked Transport
Special Access DS1 High Capacity Services
Special Access DS3 High Capacity Services
Frame Relay DS1 level and above UNI Port Connection
Frame Relay DS1 level and above NNI Port Connection

If covered facilities fail for thirty minutes or more, the customer will be credited a percentage of the monthly recurring charges associated with the interrupted facility as set forth following

Duration of Service Outage	Service Maintenance Credit Percentage
30-119 Minutes	10%
120-239 Minutes	25%
240-479 Minutes	50%
480 Minutes or greater	100%

The credit shall be applied to each rate element associated with the interrupted facility (e.g., Service Termination, Channel Mileage and Optional Features and Functions, or UNI and NNI Port Connections) and shall be credited at the rate in effect on the day the outage is reported by the customer. The credits shall not exceed the monthly rate for the facility interrupted in any one monthly billing period.

2. General Regulations (Cont'd)

2.4 Payment Arrangements and Credit Allowances (Cont'd)

2.4.4 Credit Allowance for Service Interruptions (Cont'd)

(C) When a Credit Allowance Does Not Apply

No credit allowance will be made for:

(1) Interruptions caused by the negligence of the customer.

(2) Interruptions of a service due to the failure of equipment or systems provided by the customer or others.

(3) Interruptions of a service during any period in which the Company is not afforded access to the premises where the service is terminated.

(4) Interruptions of a service when the customer has released that service to the Company for maintenance purposes, to make rearrangements, or for the implementation of an order for a change in the service during the time that was negotiated with the customer prior to the release of the service. Thereafter, a credit allowance, as set forth in (B) preceding applies.

2. General Regulations (Cont'd)

2.4 Payment Arrangements and Credit Allowances (Cont'd)

2.4.4 Credit Allowance for Service Interruptions (Cont'd)

(C) When a Credit Allowance Does Not Apply (Cont'd)

(5) Interruptions of a service that continue because of the failure of the customer to authorize replacement of any element of special construction, as set forth in 14. following, Special Construction, of this tariff. The period for which no credit allowance is made begins on the seventh day after the customer receives the Company's written notification of the need for such replacement and ends on the day after receipt by the Company of the customer's written authorization for such replacement.

(6) Periods when the customer elects not to release the service for testing and/or repair and continues to use it on an impaired basis.

(7) Periods of temporary discontinuance as set forth in 2.2.2(B) preceding.

(8) Periods of interruption as set forth in 13.3.1 following.

(9) An interruption or a group of interruptions, resulting from a common cause, for amounts less than one dollar.

(10) During a declared national emergency, where priority installation of National Security Emergency Preparedness (NSEP) telecommunications services shall take precedence.

(11) During natural disasters, work stoppages, civil disturbances, criminal actions; or by fire, flooding or other occurrences attributed to an Act of God.

(12) If a planned or scheduled outage for maintenance, upgrades and enhancements take place.

(13) Interruptions of a service due to the failure of facilities or equipment provided by connecting carriers. (N) (N)

2. General Regulations (Cont'd)

2.4 Payment Arrangements and Credit Allowances (Cont'd)

2.4.4 Credit Allowance for Service Interruptions (Cont'd)

(D) Use of an Alternative Service Provided By the Company

Should the customer elect to use an alternative service provided by the Company during the period that a service is interrupted, the customer must pay the tariffed rates and charges for the alternative service used.

(E) Temporary Surrender of a Service

In certain instances, the customer may be requested by the Company to surrender a service for purposes other than maintenance, testing or activity relating to a service order. If the customer consents, a credit allowance will be granted. The credit allowance will be ***determined in the same manner as a*** (T)
credit for service interruptions as set forth in 2.4.4(B)(1). In no case will (T)
the credit allowance exceed the monthly rate for the service surrendered in any one monthly billing period.

2.4.5 Customer Bill Verification

Upon reasonable notice, the customer, or its duly authorized representatives, shall have the right of access to mutually agreed upon Company information and records as may be necessary to verify the accuracy of access bills rendered to the customer in connection with Access Services provided under this tariff.

2.4.6 Re-establishment of Service Following Fire, Flood or Other Occurrence

(A) Nonrecurring Charges Do Not Apply

Charges do not apply for the re-establishment of service following a fire, flood or other occurrence attributed to an Act of God provided that:

(1) The service is of the same type as was provided prior to the fire, flood and other occurrence.

(2) The service is for the same customer.

2. General Regulations (Cont'd)

2.4 Payment Arrangements and Credit Allowances (Cont'd)

2.4.6 Re-establishment of Service Following Fire, Floor or Other Occurrence (Cont'd)

(A) Nonrecurring Charges Do Not Apply (Cont'd)

(3) The service is at the same location on the same premises.

(4) The re-establishment of service begins within 60 days after the Company service is available. (The 60 day period may be extended a reasonable period if the renovation of the original location on the premises affected is not practical within the allotted time period.)

(B) Nonrecurring Charges Apply

Nonrecurring Charges apply for establishing service at a different location on the same premises or at a different premises pending re-establishment of service at the original location.

2.4.7 Title or Ownership Rights

The payment of rates and charges by customers for the services offered under the provisions of this tariff does not assign, confer or transfer title or ownership rights to proposals or facilities developed or utilized, respectively, by the Company in the provision of such services.

2. General Regulations (Cont'd)

2.4 Payment Arrangements and Credit Allowances (Cont'd)

2.4.8 Ordering, Rating and Billing of Access Services Where More Than One Exchange Telephone Company or Rate Schedule is Involved

The Company will handle ordering, rating and billing of Access Services under this tariff where more than one Exchange Telephone Company or Rate Schedule is involved in the provision of Access Service as set forth in (A) or (B) following. The choice of either (A) or (B) shall be made by the Company and the Company will notify the customer which option will apply when the customer orders Access Service. The choice of (A) or (B) will be based on the interconnection arrangements between the Exchange Telephone Companies involved. The option set forth in (A) following, for services other than Feature Group A and Feature Group B, is transitional only and will expire with December 31, 1987.

(A) When an Access Service is ordered by a customer where one end of the Transport element (i.e., Switched Access Service Local Transport, Directory Transport or Special Access Service Channel Mileage) is in one Exchange Telephone Company operating territory and the other end is in another Exchange Telephone Company operating territory, except for Access Services provided with the use of Hubs, the Exchange Telephone Company in whose operating territory the customer's end user is located will accept the order for the Access Service from the customer except for Switched Access Services ordered on a per line or per trunk basis. The Exchange Telephone Company in whose territory the first point of switching is located will accept the order for Feature Group A, B and D Switched Access Services ordered in lines or trunks. The Exchange Telephone Company that accepts the

2. General Regulations (Cont'd)

2.4 Payment Arrangements and Credit Allowances (Cont'd)

2.4.8 Ordering, Rating and Billing of Access Services Where More Than One Exchange Telephone Company or Rate Schedule is Involved (Cont'd)

(A) (Cont'd)

order will then determine the charges involved, arrange to provide the Access Service ordered and bill the charges in accordance with its Access Service tariff.

When an Access Service provided with the use of a Hub is ordered by a customer, the Exchange Telephone Company in whose territory the Hub is located will accept the order for the Access Service from the customer. That Exchange Telephone Company will then determine the charges involved, arrange to provide the Access Service ordered and bill the charges in accordance with its Access Service tariff.

(B) The Company will handle ordering, rating and billing of Access Services under this tariff where more than one Exchange Telephone Company or rate schedule is involved in the provision of Access Service as follows:

(1) When a Feature Group A and/or B Switched Access Service is ordered by a customer where one end of the Transport element is in the Company operating territory and the other end is in another Exchange Telephone Company operating territory, the Exchange Telephone Company in whose operating territory the first point of switching is located will accept the order. In addition the Exchange Telephone Company in whose operating territory the customer point of termination is located must also receive a copy of the order from the customer. The Exchange Telephone Company that accepts the order will then determine the charges involved, arrange to provide the Access Service ordered and bill the charges in accordance with its Access Service tariff. At the option of the Company, each Exchange Telephone Company will provide the portion of the transport element in its operating territory to an interconnection point with another Exchange Telephone Company and will bill the charges in accordance with its Access Service tariff.

2. General Regulations (Cont'd)

2.4 Payment Arrangements and Credit Allowances (Cont'd)

2.4.8 Ordering, Rating and Billing of Access Services Where More Than One Exchange Telephone Company or Rate Schedule is Involved (Cont'd)

(B) (Cont'd)

(2) When Feature Group C and/or D Switched Access Service and/or Directory Assistance Service is ordered by a customer where one end of the Transport element is in the Company operating territory and the other end is in another Exchange Telephone Company operating territory, the orders shall be received as follows:

(a) For Feature Group C Switched Access Service and/or Directory Assistance Service, the Exchange Telephone Company in whose operating territory the end office is located must receive the order from the customer.

(b) For Feature Group D Switched Access Service ordered to an end office, the Exchange Telephone Company in whose operating territory the end office is located must receive the order from the customer.

(c) For Feature Group D Switched Access Service ordered to an access tandem, the Exchange Telephone Company in whose operating territory the access tandem is located must receive the order from the customer.

(d) For the Service ordered set forth in (a), (b) and (c) preceding, the Exchange Telephone Company in whose operating territory the customer point of termination is located must also receive a copy of the order from the customer.

Each Exchange Telephone Company will provide the portion of the Transport element in its operating territory to an interconnection point with another Exchange Telephone Company and will bill the charges in accordance with its Access Service tariff. The rate for the Transport element will be determined as set forth in (8) following. All other appropriate charges in each Exchange Telephone Company tariff are applicable.

2. General Regulations (Cont'd)

2.4 Payment Arrangements and Credit Allowances (Cont'd)

2.4.8 Ordering, Rating and Billing of Access Services Where More Than One Exchange Telephone Company or Rate Schedule is Involved (Cont'd)

(B) (Cont'd)

(3) When a WATS Access Line Service is ordered and a Transport element applies (i.e., the WATS serving office and the end user customer end office are not coterminous) and one end of the Transport element is in the Company operating territory and the other end is in another Exchange Telephone Company operating territory, the Exchange Telephone Company in whose operating territory the end office is located must receive the order from the customer. In addition, the Exchange Telephone Company in whose operating territory the WATS Serving Office is located must also receive a copy of the order from the customer. Each Exchange Telephone Company will provide the portion of the Transport element in its operating territory to an interconnection point with another Exchange Telephone Company and will bill the charges in accordance with its Access Service tariff. The rate for the Transport element will be determined as set forth in (8) following. All other appropriate charges in each Exchange Telephone Company tariff are applicable.

(4) When a Special Access Service is ordered by a customer where one end of the Channel Mileage is in the Company operating territory and the other end is in another Exchange Telephone Company operating territory, except for Special Access Service provided with the use of Hubs, either of the Exchange Telephone Companies may receive the order from the customer. In addition, the other Exchange Telephone Company must receive a copy of the order from the customer. Each Exchange Telephone Company will provide the portion of the Channel Mileage element in its operating territory

2. General Regulations (Cont'd)

2.4 Payment Arrangements and Credit Allowances (Cont'd)

2.4.8 Ordering, Rating and Billing of Access Services Where More Than One Exchange Telephone Company or Rate Schedule is Involved (Cont'd)

(B) (Cont'd)

(4) (Cont'd)

to an interconnection point (IP) with another Exchange Telephone Company and will bill the charges in accordance with its Access Service tariff. The rate for the Channel Mileage element will be determined as set forth in (8) following. All other appropriate charges in each Exchange Telephone Company tariff are applicable.

(5) When a Special Access Service involving a Hub is ordered by a customer where one end of the Channel Mileage element is in an Exchange Telephone Company operating territory and the Hub is in another Exchange Telephone Company operating territory, the Exchange Telephone Company in whose operating territory the Hub is located must receive the order from the customer. In addition, the Exchange Telephone Company in whose territory a customer premises is located must receive copies of the order from the customer. Each Exchange Telephone Company will provide the portion of the Channel Mileage element in its operating territory to an interconnection point (IP) with another Exchange Telephone Company and will bill the charges in accordance with its Access Service tariff. The rate for the Channel Mileage element will be determined as set forth in (8) following. All other appropriate charges in each Exchange Telephone Company tariff are applicable.

(6) When a Feature Group A, B, C and/or D Switched Access Service is ordered by a customer where both ends or an end and an interconnection point of the Transport element are in the same Telephone Company operating territory and same

2. General Regulations (Cont'd)

2.4 Payment Arrangements and Credit Allowances (Cont'd)

2.4.8 Ordering, Rating and Billing of Access Services Where More Than One Exchange Telephone Company or Rate Schedule is Involved (Cont'd)

(B) (Cont'd)

(6) (Cont'd)

exchange but in different states which have different rate schedules, the Company will accept the order in the state where the first point of switching is located. When a WATS Access Line Service is ordered and a Transport element applies and both ends or one end and an interconnection point of the Transport element are in the same Telephone Company operating territory and same exchange but in different states which have different rate schedules, the Company will accept the order in the state where the WATS Serving Office is located. The Company will provide the service ordered and will bill the portion of the service in each state in accordance with the rate schedule for that state. An interconnection point will be determined by the Company and will be used to determine the billing for each state. The rate for the Transport element will be determined as set forth in (8) following.

(7) When a Special Access Service, including those involving a Hub, but excluding those ordered as WATS Access Line Service, is ordered by a customer where both ends of the Channel Mileage element, an end of the Channel Mileage element and an interconnection point, an end of the Channel Mileage element and a Hub or interconnection point and a Hub are in the same Telephone Company operating territory and the same exchange, but in different states which have different rate schedules, the Exchange Telephone Company will accept the order in either state except for orders involving Hubs. For orders involving Hubs, the order must be placed in the state where the Hub is located. An interconnection point will be determined by the Exchange Telephone Company and will be used to determine the billing for each state. All appropriate charges in each state rate schedule are applicable. The rate for the Channel Mileage element will be determined as set forth in (8) following.

2. General Regulations (Cont'd)

2.4 Payment Arrangements and Credit Allowances (Cont'd)

2.4.8 Ordering, Rating and Billing of Access Services Where More Than One Exchange Telephone Company or Rate Schedule is Involved (Cont'd)

(B) (Cont'd)

(8) The rate for the Switched Access Direct-Trunked Transport and Tandem-Switched Transport or Special Access Channel Mileage per mile element for services provided as set forth in (1) through (7) preceding is determined in as follows:

(a) Determine the appropriate Switched Transport or Channel Mileage by computing the airline mileage between the two (2) ends of the Switched Transport or Channel Mileage. Determine the airline mileage for the Tandem-Switched Transport per mile element using the V&H Coordinates Method as set forth in Section 6.7.13 following. Determine the airline mileage for the Direct-Trunked Transport and Channel Mileage per mile element using the V&H Coordinates Method as set forth in Section 7.4.6 following.

(b) Determine the rate for the airline mileage determined in (a) preceding using the Company's Tariff. Multiply such rate by the Company's billing percentage factor and divide by one hundred (100) to obtain the Switched Transport or Channel Mileage Per Mile Element Charges.

(9) The interconnection points will be determined by the Exchange Telephone Companies involved. The billing percentage factor for the Company for the service between the two (2) involved offices is listed in National Exchange Carrier Association***, Inc.*** Tariff F.C.C. No. 4. (T)

2. General Regulations (Cont'd)

2.4 Payment Arrangements and Credit Allowances (Cont'd)

2.4.8 Ordering, Rating and Billing of Access Services Where More Than One Exchange Telephone Company or Rate Schedule is Involved (Cont'd)

(C) ***Reserved for Future Use*** (C)
(D)

(D)

2. General Regulations (Cont'd)

2.4 Payment Arrangements and Credit Allowances (Cont'd)

2.4.8 Ordering, Rating and Billing of Access Services Where More Than One Exchange Telephone Company or Rate Schedule is Involved (Cont'd)

(D) Example - Switched Access

(1) Layout

(a) Feature Group C Switched Access is ordered to End Office A.

(b) End Office A is in operating territory of Exchange Telephone Company A.

(c) Premises of ordering Customer is in operating territory of Exchange Telephone Company B.

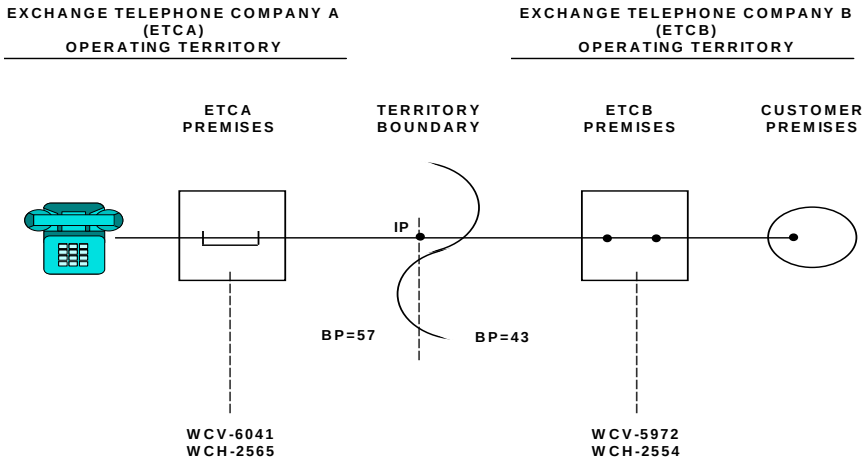

2. General Regulations (Cont'd)

2.4 Payment Arrangements and Credit Allowances (Cont'd)

2.4.8 Ordering, Rating and Billing of Access Services Where More Than One Exchange Telephone Company or Rate Schedule is Involved (Cont'd)

(D) Example - Switched Access (Cont'd)

(2) Airline Mileage (Using National Exchange Carrier Association, ***Inc.*** Tariff F.C.C. No. 4) (T) (T)

- ETCA premises to ETCB premises = 22.1, rounded = 23

(3) Tandem-Switched Transmission Charges for 10220 access minutes

- Assume ETCA rate for Tandem-Switched Transmission is $0.0001 per access minute per mile

- Assume ETCA Billing Percentage (BP) is 57

- Assume ETCB rate for Tandem-Switched Transmission is $0.0002 per access minutes per mile

- Assume ETCB Billing Percentage (BP) is 43

- Formula:

$$\text{ETCA Tandem-Switched Transmission Per Mile Charge} = \frac{\text{Access Minutes X ETCA Rate X ETCA Billing Percentage}}{100}$$

- Calculation of Transport Charges:

$$\text{ETCA Tandem-Switched Transmission Per Mile Charge} = 10220 \text{ X } \$0.0001 \text{ X } \frac{57}{100} = \$0.583$$

$$\text{ETBA Tandem-Switched Transmission Per Mile Charge} = 10220 \text{ X } \$0.0002 \text{ X } \frac{43}{100} = \$0.879$$

2. General Regulations (Cont'd)

2.4 Payment Arrangements and Credit Allowances (Cont'd)

2.4.9 Service Performance Provisioning Guarantee

(A) General

The Company assures that orders for certain Access Services, as specified in (B) following, will be installed and available for customer use no later than the Firm Order Confirmation (FOC) date.

When the failure to meet a FOC date for installation of these services is solely the Company's responsibility, the associated nonrecurring charges shall be credited to the ***customer. The*** nonrecurring charges will be credited at the rate at which they were billed, however, the credit will not be provided if a credit of the same nonrecurring charge for the same service is provided under other provisions of this Tariff. The credit of applicable nonrecurring charges for installations not completed by the FOC date is an exclusive remedy and is in lieu of any other claims described in 2.1.3 preceding. (Z)

(B) Services Subject to Credit

The Service Performance Provisioning Guarantee is available for all Switched Access Services, for Frame Relay Service UNI and NNI Port Connections and for the following Special Access Services:

Voice Grade Service
Digital Data Service
High Capacity Service

2. General Regulations (Cont'd)

2.4 Payment Arrangements and Credit Allowances (Cont'd)

2.4.9 Service Performance Provisioning Guarantee (Cont'd)

(C) When a Credit Allowance Does Not Apply

Nonrecurring charge credits under the Service Performance Provisioning Guarantee will not be made:

(1) When customer actions prevent or inhibit installation of the service (e.g., the customer's premises is inaccessible, the customer changes interface requirements or the customer is not ready to accept the service).

(2) When other Telephone Companies are involved in the service installation.

(3) When the service is provided under the Special Construction or Specialized Services or Arrangements Sections of this Tariff.

(4) During a declared national emergency, where priority installation of National Security Emergency Preparedness (NSEP) telecommunications services shall take precedence.

(5) During natural disasters, work stoppages, civil disturbances, criminal actions; or by fire, flooding or other occurrences attributed to an Act of God.

2. General Regulations (Cont'd)

2.5 Connections

2.5.1 General

Equipment and Systems (i.e., terminal equipment, multiline terminating systems and communications systems) may be connected with Switched and Special Access Service furnished by the Company where such connection is made in accordance with the provisions specified in Technical Reference ***Publication*** (C)
PUB AS No. 1, ***Issue II,*** and in 2.1 preceding. (C)

2.6 Definitions

Certain terms used herein are defined as follows:

Access Code

See “Carrier Access Code” (CAC)

Access Minutes

The term “Access Minutes” denotes that usage of exchange facilities in intrastate service for the purpose of calculating chargeable usage. On the originating end of an intrastate call, usage is measured from the time the originating end user's call is delivered by the Company to and acknowledged as received by the customer's facilities connected with the originating exchange. On the terminating end of an intrastate call, usage is measured from the time the call is received by the end user in the terminating exchange. Timing of usage at both originating and terminating ends of an intrastate call shall terminate when the calling or called party disconnects, whichever event is recognized first in the originating and terminating exchanges, as applicable.

Access Tandem

The term “Access Tandem” denotes a Company switching system that provides a concentration and distribution function for originating or terminating traffic between end offices and a customer's premises.

2. General Regulations (Cont'd)

2.6 Definitions (Cont'd)

Account

The term “Account” denotes the set of billing information for a customer. Each account is uniquely identified by the billing account number (BAN) located on either the customer's bill or service record.

Aggregator

The term “Aggregator” denotes any individual, partnership, association joint-stock company, trust, governmental entity or corporation as defined under Part 64.708(b) of the Federal Communications Commission’s Rules and Regulations.

Alternate Billing Service (ABS)

The term “Alternate Billing Service (ABS)” denotes a billing service that calls to an account not necessarily associated with the originating line.

Answer Message

The term “Answer Message” denotes a SS7 message sent in the backward direction to indicate that the call has been answered.

Answer/Disconnect Supervision

The term “Answer/Disconnect Supervision” denotes the transmission of the switch trunk equipment supervisory signal (off-hook or on-hook) to the customer's point of termination as an indication that the called party has answered or disconnected.

Asynchronous

The term “Asynchronous” denotes a method of transmission in which information is sent with each character (Byte) providing synchronization via start and stop bits.

Attenuation Distortion

The term “Attenuation Distortion” denotes the difference in loss at specified frequencies relative to the loss at 1004 Hz, unless otherwise specified.

2. General Regulations (Cont'd)

2.6 Definitions (Cont'd)

Balance (100 Type) Test Line

The term "Balance (100 Type) Test Line" denotes an arrangement in an end office which provides for balance and noise testing.

Billed Number Screening (BNS)

The term "Billed Number Screening (BNS)" denotes a process which utilized a database to determine specific characteristics and/or customer preferences on a billed line number. Examples would include, whether or ***not*** the line is a public telephone and whether the billed customer associated with the line will accept a collect call. (Z)

Bit

The term "Bit" denotes the smallest unit of information in the binary system of notation.

Business Day

The term "Business Day" denotes the times of day that a company is open for business. Generally, in the business community, these are 8:00 or 9:00 A.M. to 5:00 or 6:00 P.M. , respectively, with an hour for lunch, Monday through Friday, resulting in a standard forty (40) hour workweek. However, Business Day hours for the Company may vary based on company policy, union contract and location. To determine such hours for the Company, or company location, that company should be contacted.

2. General Regulations (Cont'd)

2.6 Definitions (Cont'd)

(D)

(D)

Byte

The term “Byte” denotes eight (8) bites of data, also referred to as an Octet.

Call

The term “Call” denotes a customer attempt for which the complete address code (e.g., 0-, 911, or 10 digits) is provided to the serving dial tone office.

Carrier or Common Carrier

See Interexchange Carrier.

Carrier Access Code (CAC)

The term “Carrier Access Code” denotes a seven-digit code assigned by the Company to an individual customer. The seven-digit code has the form 101XXXX, 950-0XXX, 950-1XXX, individual customer. The seven-digit code has the form 101XXXX, 950-0XXX, 950-1XXX, 950-10XX, or 950-00XX. The 101XXXX access code will be provided where technically feasible.

Carrier Identification Code (CIC)

The term “Carrier Identification Code” denotes numeric codes that are assigned to an IC for use with Feature Groups B and/or D Switched Access Service.

Carrier Identification Parameter (CIP)

The term “Carrier Identification Parameter (CIP)” denotes a field in the SS7 initial address message that identifies and forwards Carrier Identification Code information to an Interexchange Carrier.

2. General Regulations (Cont'd)

2.6 Definitions (Cont'd)

CCS (M)

The term "CCS" denotes one hundred (100) call seconds, which is a standard unit of traffic load that is equal to one hundred (100) seconds of usage or capacity of a group of servers (e.g., trunks).

Central Office

The term "Central Office" denotes a local Telephone Company switching system where Telephone Exchange Service customer station loops are terminated for purposes of interconnection to each other and to trunks.

Central Office Building

The term "Central Office Building" denotes a structure housing Company equipment that is under the control of the Company. (M)

(M) Material on this page previously appeared on Fourth Revised Page 76.

2. General Regulations (Cont'd)

2.6 Definitions (Cont'd)

Central Office Prefix

The term “Central Office Prefix” denotes the first three digits (NXX) of the seven-digit telephone number assigned to a customer's Telephone Exchange Service when dialed on a local basis.

Centralized Automatic Reporting on Trunks Testing

The term “Centralized Automatic Reporting on Trunks Testing” denotes a type of testing which includes the capacity for measuring operational and transmission parameters.

Channel(s)

The term “Channel(s)” denotes an electrical or photonic, in the case of fiber optic-based transmission systems, communications path between two or more points of termination.

Channel Service Unit

The term “Channel Service Unit” denotes equipment which performs one or more of the following functions: termination of a digital facility, regeneration of digital signals, detection and/or correction of signal format errors and remote loop back.

Channelize

The term “Channelize” denotes the process of multiplexing/de-multiplexing wider bandwidth or higher speed channels into narrower bandwidth or lower speed channels.

Circuit Termination

The term “Circuit Termination” denotes the data circuit and associated conditioning which provides for dedicated access to the network.

Clear Channel Capability (CCC)

The term “Clear Channel Capability (CCC)” denotes the transport of twenty-four, 64 kbps channels over a 1.544 Mbps High Capacity Service via B8ZS line code format.

(D)

(D)

2. General Regulations (Cont'd)

2.6 Definitions (Cont'd)

C-Message Noise

The term “C-Message Noise” denotes the frequency weighted average noise within an idle voice channel. The frequency weighting, called C-message, is used to simulate the frequency characteristic of the 500-type telephone set and the hearing of the average subscriber.

C-Notched Noise

The term “C-Notched Noise” denotes the C-message frequency weighted noise on a voice channel with a holding tone, which is removed at the measuring end through a notch (very narrow band) filter.

Collocation - POT

The term “Collocation - POT” denotes the physical point of termination in a central office building, specified by the Company, between Other Tariffed Services and Customer Transport Facilities.

Collocation Space

The term “Collocation Space” denotes a location within a central office building, provided through Collocation Services for the purpose of locating Customer Transport Facilities and interconnecting those facilities to Other Tariffed Services.

Common Line

The term “Common Line” denotes a line, trunk, pay telephone line or other facility provided under the General Subscriber Services Tariff of the Company, terminated on a central office switch. A common line-residence is a line or trunk provided under the residence regulations of the General Subscriber Services Tariff. A common line-business is a line provided under the business regulations of the General Subscriber Services Tariff.

Communications System

The term “Communications System” denotes channels and other facilities which are capable of communications between terminal equipment provided by other than the Company.

2. General Regulations (Cont'd)

2.6 Definitions (Cont'd)

Completed Call

The term “Completed Call” denotes a call in which answer supervision is received from the called location.

Conventional Signaling

The term “Conventional Signaling” denotes the inter-machine signaling system which has been traditionally used in North America for the purpose of transmitting the called number's address digits from the originating end office to the switching machine which will terminate the call. In this system, all of the dialed digits are received by the originating switching machine, a path is selected, and the sequence of supervisory signals and outpulsed digits is initiated. No overlap outpulsing, ten-digit ANI, ANI information digits or acknowledgment wink are included in this signaling sequence.

Cost

The term “Cost”, except as provided otherwise in this tariff, denotes all sums expended directly by the Company to provide particular facilities and/or services to a user, plus a pro-rata share of the cost to the Company of its facilities and personnel, including general and administrative costs, used in the provision of the facilities and/or services, plus a reasonable profit.

Customer(s)

The term “Customer(s)” denotes any individual, partnership, association, joint-stock company, trust, corporation, or governmental entity or any other entity which subscribes to the services offered under this tariff, including both Interexchange Carriers (ICs) and end users.

Customer Designated Premises

The term “Customer Designated Premises” denotes the premises specified by the customer for the provision of Access Service.

Customer Transport Facilities

The term “Customer Transport Facilities” denotes the fiber optic transport and distribution cables and associated transmission equipment required for the operation thereof that are provided, operated, maintained and owned or controlled by the customer.

2. General Regulations (Cont'd)

2.6 Definitions (Cont'd)

Data Terminal Equipment (DTE)

The term “Data Terminal Equipment (DTE)” denotes the customer-premises equipment that transmits and receives data.

Data Transmission (107 Type) Test Line

The term “Data Transmission (107 Type) Test Line” denotes an arrangement which provides for a connection to a signal source which provides test signals for one-way testing of data and voice transmission parameters.

Decibel

The term “Decibel” denotes a unit used to express relative difference in power, usually between acoustic or electric signals, equal to ten (10) times the common logarithm of the ratio of two signal powers.

Decibel Reference Noise C-Message Weighting

The term “Decibel Reference Noise C-Message Weighting” denotes noise power measurements with C-Message weighting in decibels relative to a reference 1000 Hz tone of 90 dB below 1 milliwatt.

2. General Regulations (Cont'd)

2.6 Definitions (Cont'd)

Decibel Reference Noise C-Message Referenced to 0

The term “Decibel Reference Noise C-Message Referenced to 0” denotes noise power in “Decibel Reference Noise C-Message Weighting” referred to or measured at a zero (0) transmission level point.

Detail Billing

The term “Detail Billing” denotes the listing of each message and/or rate element for which charges to a customer are due on a bill prepared by the Company.

(D)

(D)

Directory Assistance (Intrastate)

The term “Directory Assistance” denotes the provision of telephone numbers by a Company operator when the operator location is accessed by a customer premises by sending appropriate signals, i.e., off-hook, 411, 555-1212 or (NPA) 555-1212.

Directory Assistance Location (Intrastate)

The term “Directory Assistance Location” denotes a Company office where Company equipment first receives the Directory Assistance call from a customer's premises and selects the first operator position to respond to the Directory Assistance call.

Direct-Trunked Transport

The term “Direct-Trunked Transport” denotes Switched Access Transport from the serving wire center to the end office on circuits dedicated to the use of a single access customer without tandem switching.

Dual Tone Multifrequency Address Signaling

The term “Dual Tone Multifrequency Address Signaling” denotes a type of signaling that is an optional feature of Switched Access Feature Group A. It may be utilized when Feature Group A is being used in the terminating direction (from the point of interface with the customer to the local exchange end office). An office arranged for Dual Tone Multifrequency Signaling would expect to receive address signals from the customer in the form of Dual Tone Multifrequency signals.

2. General Regulations (Cont'd)

2.6 Definitions (Cont'd)

Echo Control

The term “Echo Control” denotes the control of reflected signals in a telephone transmission path.

Echo Path Loss (EPL)

The term “Echo Path Loss (EPL)” denotes the measure of reflected signal at a 4-wire point of interface without regard to the send and receive Transmission Level Point.

Echo Return Loss (ERL)

The term “Echo Return Loss (ERL)” denotes a frequency weighted measure of return loss over the middle of the voiceband (approximately 500 to 2500 Hz), where talker echo is most annoying.

Effective 2-Wire

The term “Effective 2-Wire” denotes a condition which permits the simultaneous transmission in both directions over a channel, but it is not possible to insure independent information transmission in both directions. Effective 2-wire channels may be terminated with 2-wire or 4-wire interfaces.

Effective 4-Wire

The term “Effective 4-Wire” denotes a condition which permits the simultaneous independent transmission of information in both directions over a channel. The method of implementing effective 4-wire transmission is at the discretion of the Company (physical, time domain, frequency-domain separation or echo cancellation techniques). Effective 4-wire channels may be terminated with a 2-wire interface at the customer's premises. However, when terminated 2-wire, simultaneous independent transmission cannot be supported because the two-wire interface combines the transmission paths into a single path.

2. General Regulations (Cont'd)

2.6 Definitions (Cont'd)

2. General Regulations (Cont'd)

2.6 Definitions (Cont'd)

End Office Switch

The term “End Office Switch” denotes a local Company switching system where Telephone Exchange Service customer station loops are terminated for purposes of interconnection to trunks. Included are Remote Switching Modules (RSM) and Remote Switching Systems (RSS) served by a host office in a different wire center.

End User

The term “End User” denotes any customer of an ***intrastate telecommunications*** service that is not a carrier, except that a carrier other than a telephone company shall be deemed to be an "end user" when such carrier uses a telecommunications service for administrative purposes, and a person or entity that offers telecommunications services exclusively as a reseller shall be deemed to be an "end user" if all resale transmissions offered by such reseller originate on the premises of such reseller. (Z)

Entry Switch

See First Point of Switching.

Envelope Delay Distortion

The term “Envelope Delay Distortion” denotes a measure of the linearity of the phase versus frequency of a channel.

(D)

(D)

Equal Level Echo Path Loss (ELEPL)

The term “Equal Level Echo Path Loss (ELEPL)” denotes the measure of Echo Path Loss (EPL) at a 4-wire interface which is corrected by the difference between the send and receive Transmission Level Point (TLP). [ELEPL = EPL - TLP (send) + TLP (receive)].

2. General Regulations (Cont'd)

2.6 Definitions (Cont'd)

Exit Message

The term “Exit Message” denotes a SS7 message sent to an end office by the Company tandem switch to mark the Carrier Connect Time when the Company’s tandem switch send an Initial Address Message to an Interexchange Customer.

Expected Measured Loss

The term “Expected Measured Loss” denotes a calculated loss which specifies the end-to-end 1004 Hz loss on a terminated test connection between two readily accessible manual or remote test points. It is the sum of the inserted connection loss and test access loss including any test pads.

Exchange

The term “Exchange” denotes a unit generally smaller than a local access and transport area, established by the Company for the administration of communications service in a specified area which usually embraces a city, town or village and its environs. It consists of one or more central offices together with the associated facilities used in furnishing communications service within that area. The exchange includes any Extended Area Service area that is an enlargement of the Company's exchange area to include nearby exchanges. One or more designated exchanges comprise a given local access and transport area.

Exchange Access Signaling

The term “Exchange Access Signaling” denotes the signaling system which is used, by equal access end offices, to transmit originating information and address digits to the customer's premises and which includes the means of verifying the receipt of these address digits. Features of this system include overlap outpulsing, identification of the type of call, identification of the ten-digit telephone number of the calling party, and acknowledgment wink supervisory signals.

Exchange Termination

The term “Exchange Termination” denotes the central office equipment (Modem or Channel Service Unit/Digital Service Unit) required for circuit termination at the switch.

Extended Area Service

See Exchange.

2. General Regulations (Cont'd)

2.6 Definitions (Cont'd)

Field Identifier

The term "Field Identifier" denotes two to four characters that are used on service orders to convey specific instructions. Field Identifiers may or may not have associated data. Selected field identifiers are used in Company billing systems to generate nonrecurring charges.

Firm Access Order

The term "Firm Access Order" denotes an access service order for which the customer has provided the Company sufficient information to proceed with the provision of facilities and/or terminations.

Firm Order Confirmation (FOC) ***Date*** (T)

The term "Firm Order Confirmation Date" denotes the date on which the Company confirms to the customer that the requested service can be provided.

First-Come, First-Served

The term "First-Come, First-Served" denotes a procedure followed when the first service order received will be the first service order processed.

First Point of Switching

The term "First Point of Switching" denotes the first Company location at which switching occurs on the terminating path of a call proceeding from the customer premises to the terminating end office and, at the same time, the last Company location at which switching occurs on the originating path of a call proceeding from the originating end office to the customer premises.

Frequency Shift

The term "Frequency Shift" denotes the change in the frequency of a tone as it is transmitted over a channel.

Geographical Market Area (GMA)

See Local Access Transport Area (LATA).

2. General Regulations (Cont'd)

2.6 Definitions (Cont'd)

Grandfathered

The term “Grandfathered” denotes Terminal Equipment, Multiline Terminating Systems and Protective Circuitry directly connected to the facilities utilized to provide services under the provisions of this tariff, and which are considered grandfathered under Part 68 of the Federal Communications Commission’s Rules and Regulations.

Holding Time

The term “Holding Time” denotes the duration of a public dial call.

Host Office

The term “Host Office” denotes an electronic switching system which provides call-processing capabilities for one or more Remote Switching Modules or Remote Switching Systems.

Hub

The term “Hub” denotes a Company designated serving wire center at which bridging or multiplexing functions are performed. The bridging functions performed may be used to connect three or more customer designated premises in a multipoint arrangement. The multiplexing functions are to channelize analog or digital facilities to individual services requiring a lower capacity or bandwidth.

2. General Regulations (Cont'd)

2.6 Definitions (Cont'd)

Immediately Available Funds

The term “Immediately Available Funds” denotes a corporate or personal check drawn on a bank account and funds which are available for use by the receiving party on the same day on which they are received and includes U.S. Federal Reserve bank wire transfers, U.S. Federal Reserve notes (paper cash), U.S. coins, U.S. Postal Money Orders and New York Certificates of Deposit.

Impedance Balance

The term “Impedance Balance” denotes the method of expressing Echo Return Loss and Singing Return Loss at a 4-wire interface whereby the gains and/or loss of the 4 wire portion of the transmission path, including the hybrid, are not included in the specification.

Impulse Noise

The term “Impulse Noise” denotes any momentary occurrence of the noise on a channel over a specified level threshold. It is evaluated by counting the number of occurrences which exceed the threshold.

Individual Case Basis (ICB)

The term “Individual Case Basis (ICB)” denotes a condition in which the regulations, if applicable, rates and charges for an offering under the provisions of this tariff are developed based on the circumstances in each case.

Initial Address Message

The term “Initial Address Message” denotes a SS7 message sent in the forward direction to initiate trunk set up by seizing an outgoing trunk for sending trunk and call routing and handling information to the next switch.

Inserted Connection Loss

The term “Inserted Connection Loss” denotes the 1004 Hz power difference (in dBs) between the maximum power available at the originating end and the actual power reaching the terminating end through the inserted connection.

2. General Regulations (Cont'd)

2.6 Definitions (Cont'd)

Interexchange Carrier (IC) or Interexchange Common Carrier

The terms “Interexchange Carrier (IC)” or “Interexchange Common Carrier” denotes any individual, partnership, association, joint-stock company, trust, governmental entity or corporation engaged for hire in ***intrastate communication*** by wire or radio, between two (2) or more exchanges. (Z)

Intermodulation Distortion

The term “Intermodulation Distortion” denotes a measure of the nonlinearity of a channel. It is measured using four (4) tones, and evaluating the ratios (in dBs) of the transmitted composite four-tone signal power to the second-order products of the tones (R2), and the third-order products of the tones (R3).

Interstate Communications

The term “Interstate Communications” denotes both interstate and foreign communications.

Intrastate Communications

The term “Intrastate Communications” denotes any communications within a state subject to oversight by a State Regulatory Commission as provided by the laws of the State involved.

Intrastate Service Arrangement

The term “Intrastate Service Arrangement” denotes an arrangement provided pursuant to intrastate tariffs, contracts or service arrangements whereby the subscriber who obtains the arrangement permits others to make calls to the telephone number assigned to the arrangement without charges.

Jointly Used Subscriber Plant

The term “Jointly Used Subscriber Plant” denotes the local nontraffic sensitive facilities which provide connection between the customer’s service location and the exchange central office serving the customer and which may alternatively be used to place exchange service calls or interexchange intrastate service calls with no change in the nature of the facilities.

Kilobits Per Second (Kbps)

The term “Kilobits Per Second (Kbps)” denotes one thousand (1000) bits per second.

2. General Regulations (Cont'd)

2.6 Definitions (Cont'd)

Line Information Data Base (LIDB)

The term “Line Information Data Base (LIDB)” denotes a database containing billing validation data to support Alternate Billing Services.

Line Side Connection

The term “Line Side Connection” denotes a connection of a transmission path to the line side of a local exchange switching system.

Local Access and Transport Area (LATA)

The term “Local Access and Transport Area (LATA)” denotes a geographic area established for the provision and administration of communications service. It encompasses one or more designated exchanges, which are grouped to service common social, economic and other purposes. For the purposes of this tariff Geographical Market Area (GMA) and LATA are intended to be interchangeable.

Local Calling Area

The term “Local Calling Area” denotes a geographical area, as defined in the Company's Local and/or General Exchange Service tariff, which an end user (Telephone Exchange Service subscriber) may complete a call without incurring MTS charges.

Local Circuit Facility

The term “Local Circuit Facility” denotes the unconditioned copper facility used as the basis for designing a data circuit.

Local Tandem Switch

The term “Local Tandem Switch” denotes a local Company switching unit by which local or access telephonic communications are switched to and from an end office switch.

Loop Around Test Line

The term “Loop Around Test Line” denotes an arrangement utilizing a Company central office to provide a means to make certain two-way transmission tests on a manual basis. This arrangement has two central office terminations, each reached by means of separate telephone numbers and does not require any specific customer premises equipment. Equipment subject to this test arrangement is at the discretion of the customer.

2. General Regulations (Cont'd)

2.6 Definitions (Cont'd)

Loss Deviation

The term “Loss Deviation” denotes the variation of the actual loss from the designed value.

Maintenance Test Unit (MTU)

The term “Maintenance Test Unit (MTU)” denotes a piece of equipment installed and maintained by the Company near the end of a transmission path on the central office side of a customer’s premises. Upon proper command, the Maintenance Test Unit can isolate a customer’s wire and terminal equipment ***from*** the network loop. It enables remote testing of the transmission path’s performance to the MTU. (Z)

Maritime Radio Common Carriers (MRCCs)

The term “Maritime Radio Common Carries (MRCCs)” denotes carriers which are regulated under Part 81 of the Federal Communications Commission's Rules and Regulations.

Major Fraction Thereof

The term “Major Fraction Thereof” is any period of time in excess of 1/2 of the stated amount of time. As an example, in considering a period of 24 hours, a major fraction thereof would be any period of time in excess of 12 hours exactly. Therefore, if a given service is interrupted for a period of thirty-six hours and fifteen minutes, the customer would be given a credit allowance for two twenty four-hour periods for a total of forty-eight hours.

Message

The term “Message” denotes a “Call” as defined preceding.

Milliwatt (102 Type) Test Line

The term “Milliwatt (102 Type) Test Line” denotes an arrangement in an end office which provides a 1004 Hz tone at 0 dBmO for one-way transmission measurements towards the customer's premises from the Company end office.

2. General Regulations (Cont'd)

2.6 Definitions (Cont'd)

Minutes of Use

See Access Minutes.

Multiline Business Customer

The term “Multiline Business Customer” denotes an End User who is provided with more than one Common Line-business line in a state by the same Telephone Company under the business regulations of the General and/or Local Exchange Service tariffs of the Company.

Network Control Signaling

The term “Network Control Signaling” denotes the transmission of signals used in the telecommunications system which perform functions such as supervision (control, status, and charge signals), address signaling (e.g., dialing), calling and called number identifications, rate of flow, service selection error control and audible tone signals (call progress signals indicating reorder or busy conditions, alerting, coin denominations, coin collect and coin return tones) to control the operation of the telecommunications system.

Nonsynchronous Test Line

The term “Nonsynchronous Test Line” denotes an arrangement in step-by-step end offices which provides operational tests which are not as complete as those provided by the synchronous test lines, but can be made more rapidly.

North American Numbering Plan

The term “North American Numbering Plan” denotes a three-digit area (Numbering Plan Area) code and a seven-digit telephone number made up of a three-digit Central Office code plus a four-digit station number.

Off-hook

The term “Off-hook” denotes the active condition of Switched Access or a Telephone Exchange Service line.

2. General Regulations (Cont'd)

2.6 Definitions (Cont'd)

On-hook

The term "On-hook" denotes the idle condition of Switched Access or a Telephone Exchange Service line.

Open Circuit Test Line

The term "Open Circuit Test Line" denotes an arrangement in an end office ***that*** provides an ac open circuit termination of a trunk or line by means of an inductor of several Henries. (T)

Operator Service System (OSS)

The term "Operator Service System (OSS)" denotes the group of interacting hardware (switching equipment, data links and operator terminals) and software components for the provision of Operator Service functionality.

Optical Carrier Level (n) (OCn) (N)

The term "Optical Carrier Level (n)" denotes the physical line connection (aka facility) between two locations that uses optical signaling equipment for transmitting information over fiber optics. A level of bit rate speed transmission is indicated by "n". OC1 optical transmissions are at 51.84 Mbps; OC3 at 155.52 Mbps; OC12 at 622.08 Mbps; and OC48 at 2488.32 Mbps.

Optical Carrier Level n Concatenated (OCnc)

The term "Optical Carrier Level n Concatenated" denotes the physical line or clear channel connection (aka facility) between two locations that is capable, using optical signaling equipment, of replacing multiple payload groupings into one larger payload grouping, resulting in a single communications channel.

Optical Carrier Rate (OC#)

The term "Optical Carrier Rate" denotes a SONET transmission signal/speed, line rate or service. The rate is in multiples of an OC1, which is equivalent to a Synchronous Transport Signal (STS1), 51.84 Mbps, SONET's basic rate. OC# rate bandwidth capacity is 155.52 Mbps for OC3, 622.08 Mbps for OC12, and 2488.32 Mbps for OC48.

Optical Carrier Rate Concatenated (OC#c)

The term "Optical Carrier Rate Concatenated" denotes a clear channel SONET transmission using only one framing format. For example, an OC3 signal provides three STS1 frame formats with 3 overheads for a total capacity of 2322 bytes per Synchronous Payload Envelope (SPE); in an OC3c signal, one STS3c frame format is used with one overhead, increasing the total payload capacity to 2340 bytes per SPE. (N)

(M)

(M) Material previously appearing on this page now appears on Page 90.2.

2. General Regulations (Cont'd) (M)

2.6 Definitions (Cont'd)

Originating Direction

The term “Originating Direction” denotes the use of Access Service for the origination of calls from an end user premises to a customer premises.

Originating Point Code (OPC)

The term “Originating Point Code (OPC)” denotes an originating point code that is assigned to identify each Operator Service System (OSS) location.

Other Tariffed Services

The term “Other Tariffed Services”, as used for Collocation Services in ***Section*** 17 following, (T)
denotes specific rate elements of this Tariff, offered by the Company, which may be interconnected to Customer Transport Facilities using Collocation Services. Such rate elements are specified in ***Section*** 17.7 following. (T)

Overlap Outpulsing

The term “Overlap Outpulsing” denotes a feature of the exchange access signaling system ***that*** permits initiation of pulsing to the customer's premises before the calling subscriber has (T)
completed dialing an originating call. (M)

(M) Material now appearing on this page previously appeared on First Revised Page 90.1.

2. General Regulations (Cont'd)

2.6 Definitions (Cont'd)

Pay Telephone

The term “Pay Telephone” denotes coin or coinless instruments and related facilities that are available for use by the general public for public convenience and necessity.

Permanent Virtual Circuit (PVC)

A virtual circuit through the packet network that is established at service installation and is available on a permanent basis. No call establishment or call termination is associated with a Permanent Virtual Circuit (PVC). The PVC feature may be available across X.75 interfaces.

Personal Identification Number (PIN)

The term “Personal Identification Number (PIN)” denotes a confidential four-digit code number provided to a calling card customer to protect against the unauthorized use of their calling card number. The PIN is stored in the LIDB for those accounts that have an associated calling card.

Phase Jitter

The term “Phase Jitter” denotes the unwanted phase variations of a signal.

Point of Termination

The term “Point of Termination” denotes a point of demarcation within a customer-designated premises at which the Company’s responsibility for the provision of Access Service ends.

Premises

The term “Premises” denotes a building, or a portion of a building in a multitenant building, or buildings on continuous property (except Railroad right-of-way, etc.), not separated by a public highway.

Primary Exchange Carrier

The term “Primary Exchange Carrier” denotes the Local Exchange Telephone Company in whose exchange a customer’s first point of switching (i.e., dial tone office for FGA) is located.

Protocol

The term “Protocol” denotes a set of rules governing the format to be followed when transmitting information between communicating devices.

2. General Regulations (Cont'd)

2.6 Definitions (Cont'd)

Query

The term "Query" denotes a request for specific information generated by a computer processor and sent to a database, with a predefined set of responses requested.

Radio Common Carriers (RCCs)

The term "Radio Common Carriers (RCCs)" denotes Carriers which are regulated under Part 22 of the Federal Communications Commission's Rules and Regulations.

Registered Equipment

The term "Registered Equipment" denotes the customer's premises equipment which complies with and has been approved within the Registration Provisions of Part 68 of the Federal Communications Commission's Rules and Regulations.

Release Message

The term "Release Message" denotes a SS7 message sent in either direction to indicate that a specific circuit is being released.

Remote Switching Modules and/or Remote Switching Systems

The term "Remote Switching Modules and/or Remote Switching Systems" denotes small, remotely controlled electronic end office switches which obtain their call processing capability ***from*** an ESS-type Host Office. The Remote Switching Modules and/or Remote Switching Systems cannot accommodate direct trunks to a customer. (Z)

2. General Regulations (Cont'd)

2.6 Definitions (Cont'd)

Response

The term “Response” denotes one (1) response from a set of predefined expected responses to a request for information contained in a query from a computer processor.

Responsible Organization

The term “Responsible Organization” denotes that entity which is responsible for the management and administration of a Toll Free Code (TFC) Service record in the TFC Service Management System.

Return Loss

The term “Return Loss” denotes a measure of the similarity between the two (2) impedances at the junction of two (2) transmission paths. The higher the return loss, the higher the similarity.

Reverse Charge Blocking

The term “Reverse Charge Blocking” denotes the capability to deny reverse charge (collect) calls from other network users.

Secondary Exchange Carrier

The term “Secondary Exchange Carrier” denotes the Local Exchange Telephone Company in whose exchange a customer's end users end office is located and where the customer's first point of switching is provided by a Primary Exchange Carrier who is not the same Exchange Carrier as the Secondary Exchange Carrier.

Service Control Point (SCP)

The term “Service Control Point (SCP)” denotes a transaction processor based system that provides a network interface to various data base services.

Service Switching Point (SSP)

The term “Service Switching Point (SSP)” denotes an end office or tandem switch equipped with the signaling link hardware and software that can perform the Signal Point functions. In addition, SSPs can identify the need for application software in processing a CCS/SS7 call and request and respond to call processing instructions issued by a Service Control Point.

2. General Regulations (Cont'd)

2.6 Definitions (Cont'd)

Serving Wire Center

The term “Serving Wire Center” denotes the wire center from which the customer designated premises would normally obtain dial tone from the Company.

Seven Digit Manual Test Line

The term “Seven Digit Manual Test Line” denotes an arrangement which allows the customer to select balance, milliwatt and synchronous test lines by manually dialing a seven digit number over the associated access connection.

Short Circuit Test Line

The term “Short Circuit Test Line” denotes an arrangement in an end office which provides for an ac short circuit termination of a trunk or line by means of a capacitor of at least four macrofarads.

Signal-to-C-Notched Noise Ratio

The term “Signal-to-C-Notched Noise Ratio” denotes the ratio in dB of a test signal to the corresponding C-Notched Noise.

Signal Transfer Point (STP)

The term “Signal Transfer Point (STP)” denotes a packet switch which provides CCS network access and performs CCS message routing and screening.

Signaling System 7 (SS7)

The term “Signaling System 7 (SS7)” denotes the layered protocol used for standardized common channel signaling in the United State.

Singing Return Loss (SRL)

The term “Singing Return Loss (SRL)” denotes the frequency weighted measure of return loss at the edges of the voiceband (200 to 500 Hz and 2500 to 3200 Hz), where singing (instability) problems are most likely to occur.

2. General Regulations (Cont'd)

2.6 Definitions (Cont'd)

Single Line Business Customer

The term "Single Line Business Customer" denotes an end user who pays for an End User Common Line at a rate that is not described as a residential rate in the Company's General Subscriber Services Tariff and who does not obtain more than one (1) such line from the same Telephone Company.

Special Order

The term "Special Order" denotes an order for a Billing and Collection Service or an order for a Directory Assistance Service.

Subtending End Office of an Access Tandem

The term "Subtending End Office of an Access Tandem" denotes an end office that has final trunk group routing through that tandem.

Switch Termination

The term "Switch Termination" denotes a line port on a central office based packet switch.

Synchronous

The term "Synchronous" denotes a method of transmission in which information being transmitted over a line is controlled by a timing device.

Synchronous Optical Network (SONET) (N)

The term "Synchronous Optical Network" denotes a North American standard for synchronous optical networks providing transmission rates from 51.84 Mbps. SONET uses a 51.84 Mbps STS-1 signal as the basic building block. Higher rate signals are available in direct multiples of STS-1. (N)

Synchronous Test Line

The term "Synchronous Test Line" denotes an arrangement in an end office ***that*** performs marginal operational tests of supervisory and ring tripping functions. (T)

(M)

(M) Material previously appearing on this page now appears on Page 94.1.

2. General Regulations (Cont'd)

2.6 Definitions (Cont'd)

Synchronous Transport Signal - Level (STS1) (N)

The term "Synchronous Transport Signal - Level" denotes a 51.84 Mbps signal that is the electrical equivalent of the SONET optical based signal OC1. An STS1 can carry a DS3 or 28 DS1s when specifically formatted. However, individual DS1s within a DS3 are not accessible within SONET and their performance cannot be guaranteed for this reason. These DS1s may be accessed using the Special Access DS3 to DS1 multiplexing optional service. (N)

Tandem-Switched Transport (M)

The term “Tandem-Switched Transport” denotes Switched Access Transport from the serving wire center to the end office that is switched at a tandem switch. Tandem-Switched Transport consists of circuits dedicated to the use of a single access customer from the serving wire center to the tandem (although this dedicated line will not exist if the serving wire center and the tandem are located in the same place) and circuits used in common by multiple access customers from the tandem to the end office. (M)

Terminating Direction

The term “Terminating Direction” denotes the use of Access Service for the completion of calls from a customer premises to an end user premises.

Toll Free Code (TFC)

The term “Toll Free Code (TFC)” denotes a three (3) digit Numbering Plan Area (NPA) or Area Code that is specifically assigned by the telecommunications industry for use by Telecommunications Service Providers in the provision of telephone numbers that, unlike traditional telephone numbers and calls, when dialed are toll free to the originating caller. The specific codes assigned and used, or reserved for use, for this purpose are 800, 822, 833, 844, 855, 866, 877 and 888.

Toll Free Code Service Management System (TFC SMS)

The term “Toll Free Code Service Management System (TFC SMS)” denotes the main operations support system used to create and update TFC Service records in the national TFC database.

Toll Free Code (TFC) Service Provider

The term “Toll Free Code (TFC) Service Provider” denotes a telecommunications company, including Local Exchange Carriers and Interexchange Carriers, or a Reseller of Exchange or Interexchange Services that offers TFC Service to end users.

(M) Material now appearing on this page previously appeared on Third Revised Page 94.

2. General Regulations (Cont'd)

2.6 Definitions (Cont'd)

Transmission Measuring (105 Type) Test Line/Responder

The term “Transmission Measuring (105 Type) Test Line/Responder” denotes an arrangement in an end office which provides far-end access to a responder and permits two-way loss and noise measurements to be made on trunks from a near end office.

Transmission Path

The term “Transmission Path” denotes an electrical path capable of transmitting signals within the range of the service offering, e.g., a voice grade transmission path is capable of transmitting voice frequencies within the approximate range of 300 to 3000 Hz. A transmission path is comprised of physical or derived channels consisting of any form or configuration of facilities typically used in the telecommunications industry.

Trunk

The term “Trunk” denotes a communications path connecting two switching systems in a network, used in the establishment of an end-to-end connection.

Trunk Group

The term “Trunk Group” denotes a set of trunks which are traffic engineered as a unit for the establishment of connections between switching systems in which all of the communications paths are interchangeable.

Trunk Side Connection

The term “Trunk Side Connection” denotes the connection of a transmission path to the trunk side of a local exchange switching system.

Two-Wire to Four-Wire Conversion

The term “Two-Wire to Four-Wire Conversion” denotes an arrangement which converts a four-wire transmission path to a two-wire transmission path to allow a four-wire facility to terminate in a two-wire entity (i.e., a central office switch).

2. General Regulations (Cont'd)

2.6 Definitions (Cont'd)

(D)

(D)

V and H Coordinates Method

The term “V and H Coordinates Method” denotes a method of computing airline miles between two points by utilizing an established formula which is based on the vertical (V) and horizontal (H) coordinates of the two points.

WATS Serving Office

The term “WATS Serving Office” denotes a Company designated serving wire center where switching, screening and/or recording functions are performed.

Wire Center

The term “Wire Center” denotes a building in which one or more central offices, used for the provision of Telephone Exchange Services, are located.

3. Carrier Common Line Access Service

The Company will provide Carrier Common Line Access Service (Carrier Common Line Access) to customers in conjunction with Switched Access Service provided in Section 6 of this tariff.

3.1 General Description

Carrier Common Line Access provides for the use of end users' Company provided common lines by customers for access to such end users to furnish Intrastate Communications.

Premium Access is (1) Switched Access Service provided to customers under this tariff, which furnish ***intrastate*** MTS/WATS, or (2) Switched Access Service in an end office converted to equal access. (Z)

Non Premium Access is Switched Access Service provided in an end office not yet converted to equal access to customers that do not furnish intrastate MTS/WATS.

A Special Access Surcharge, as set forth in ***Section*** 7.5.12 following, will apply to intrastate special access service provided by the Company to a customer, in accordance with regulations as set forth in ***Section*** 7.4.2 following. (T) (T)

3.2 Limitations

3.2.1 Exclusions

Neither a telephone number nor detail billing is provided with Carrier Common Line Access. Additionally, directory listings and intercept arrangements are not included in the rates and charges for Carrier Common Line Access.

3.2.2 Access Groups

All line side connections provided in the same access group will be limited to the same features and operating characteristics.

All trunk side connections provided in the same access group will be limited to the same features and operating characteristics.

3. Carrier Common Line Access Service (Cont'd)

3.2 Limitations (Cont'd)

3.2.3 WATS Special Access Circuits

Where Special Access Services are utilized for connection with Switched Access Services at Company designated WATS Serving Offices for the provision of WATS or WATS-like services, Switched Access Service minutes which are carried on that end of the service (i.e., originating minutes for outward WATS and WATS-like services and terminating minutes for inward WATS and WATS-like services) shall not be accessed Carrier Common Line Access per minute charges with the following exception. Carrier Common Line Access per minute charges shall apply when Feature Group A or Feature Group B switched access is ordered from a non equal access Company office that does not have measurement capabilities and the assumed access minutes of use monthly surrogates, as set forth in 6.7.8(D) following, are used.

3.3 Undertakings of the Company

3.3.1 Provision of Service

Where the customer is provided Switched Access Service under other sections of this tariff, the Company will provide the use of Telephone Company common lines by a customer for access to end users at rates and charges as set forth in 3.9 following.

3.3.2 Interstate and Intrastate Use

The Switched Access Service provided by the Company includes the Switched Access Service provided for both interstate and intrastate communications. The Carrier Common Line Access rates and charges as set forth in 3.9 following apply to intrastate Switched Access Service access minutes in accordance with the rate regulations as set forth in 3.8.4 following (Percent ***Interstate*** Use - PIU). (T)

3. Carrier Common Line Access Service (Cont'd)

3.4 Obligations of the Customer

3.4.1 Switched Access Service Requirement

The Switched Access Service associated with Carrier Common Line Access shall be ordered by the customer under other sections of this tariff.

3.4.2 Supervision

The customer facilities at the premises of the ordering customer shall provide the necessary on-hook and off-hook supervision.

3.5 Determination of Usage Subject to Carrier Common Line Access Charges

Except as set forth herein, all Switched Access Service provided to the customer will be subject to Carrier Common Line Access charges.

3.5.1 Determination of Jurisdiction

When the customer reports interstate and intrastate use of Switched Access Service, the associated Carrier Common Line Access used by the customer for intrastate will be determined as set forth in 3.8.4 following (Percent ***Interstate*** Use - PIU). (T)

3.5.2 Cases Involving Usage Recording by the Customer

Where Feature Group C end office switching is provided without Company recording and the customer records minutes of use used to determine Carrier Common Line Access charges (i.e., Feature Group C operator and calls such as pay telephone sent-paid, operator-DDD, operator-person, collect, credit-card, third number and/or other like calls), the customer shall furnish such minutes of use detail to the Company in a timely manner. If the customer does not furnish the data, the customer shall identify all Switched Access Services, which could carry such calls in order for the Company to accumulate the minutes of use through the use of special Company measuring and recording equipment.

3. Carrier Common Line Access Service (Cont'd)

3.5 Determination of Usage Subject to Carrier Common Line Access Charges (Cont'd)

3.5.3 Local Exchange Access and Enhanced Services Exemption

When access to the local exchange is required to provide a customer's service (e.g., MTS/WATS-like, telex, data, etc.) that uses a resold private line service, Switched Access Service Rates and Regulations, as set forth in 6 following will apply, except when such access to the local exchange is required for the provision of an enhanced service. Carrier Common Line Access rates and charges as set forth in 3.9 following apply in accordance with the resale rate regulations as set forth in 3.6.4 following.

3.6 Resold Services

3.6.1 Scope

Where the customer is reselling MTS and/or MTS-like service(s) on which the Carrier Common Line and Switched Access charges have been assessed, the customer may, at the option of the customer, obtain Feature Group A, Feature Group B or Feature Group D Switched Access Service under this tariff, as set forth in 6 following, for originating and/or terminating access in the local exchange. Such access group arrangements, whether single line or trunks or multiline hunt groups or trunk groups, will have Carrier Common Line Access charges applied as set forth in 3.9 following in accordance with the resale rate regulations set forth in 3.6.4 following. For purposes of administering this provision:

Resold intrastate terminating MTS and MTS-like service(s) shall include collect calls, third number calls, and credit card calls where the reseller pays the underlying carrier's service charges; and shall not include interstate minutes of use.

Resold intrastate originating MTS and MTS-like service(s) shall not include collect, third number, credit card, or interstate minutes of use.

3. Carrier Common Line Access Service (Cont'd)

3.6 Resold Services (Cont'd)

3.6.2 Customer Obligations Concerning the Resale of MTS and MTS-like Services

When the customer is reselling MTS and/or MTS-like service(s) as set forth in 3.6.1 preceding, the customer will be charged Carrier Common Line Access charges in accordance with the resale rate regulations, as set forth in 3.6.4 following, if the customer or the provider of the MTS service furnishes documentation of the MTS usage and/or the customer furnishes documentation of the MTS-like usage. Such documentation provided by the customer shall be supplied each month and shall identify the involved resold MTS and/or MTS-like services.

The monthly period used to determine the minutes of use for resold MTS and/or MTS-like service(s) shall be the most recent monthly period for which the customer has received a bill for such resold service(s). This information shall be delivered to the Company, at a location specified by the Company, no later than 15 days after the bill date shown on the resold MTS and/or MTS-like service bill. If the required information is not received by the Company, the previously reported information, as described preceding, will be used for the next two months. For any subsequent month, no allocation or credit will be made until the required documentation is delivered to the Company by the customer.

3.6.3 Resale Documentation Provided by the Customer

When the customer utilizes Switched Access Service as set forth in 3.6.2 preceding, the Company may request a certified copy of the customer's resold MTS or MTS-like usage billing from either the customer or the provider of the MTS or MTS-like service. Requests for billing will relate back no more than 12 months prior to the current billing period.

3. Carrier Common Line Access Service (Cont'd)

3.6 Resold Services (Cont'd)

3.6.4 Rate Regulations Concerning the Resale of MTS and MTS-like Services

When the customer is provided an access group to be used in conjunction with the resale of MTS and/or MTS-like services as set forth in 3.6.1 preceding, subject to the limitations as set forth in 3.2 preceding, and the billing entity receives the usage information required as set forth in 3.6.2 preceding, to calculate the adjustment of Carrier Common Line Access charges, the customer will be billed as set forth in (D), (E) or (F) following, depending upon, respectively, whether the usage is from non equal access offices, equal access offices, or a combination of the two.

(A) Apportionment and Adjustment of Resold Minutes of Use

When the customer is provided with more than one access group in a LATA in association with the resale of MTS and/or MTS-like services, the resold minutes of use will be apportioned as follows:

(1) Originating Services

The Company will apportion the resold originating MTS and/or MTS-like services and originating minutes of use for which the resale credit adjustment applies, among the access groups. Such apportionment will be based on the relationship of the originating usage for each access group to the total originating usage for all access groups in the LATA. For purposes of administering this provision:

Resold originating MTS and/or MTS-like services minutes shall be only those attributable to intrastate originating MTS and/or MTS-like minutes and shall not include collect, third number, credit card, or interstate minutes of use.

The resale credit adjustment shall apply for resold originating MTS and MTS-like services and minutes of use, provided Carrier Common Line and Switched Access Charges have been assessed on such services.

3. Carrier Common Line Access Service (Cont'd)

3.6 Resold Services (Cont'd)

3.6.4 Rate Regulations Concerning the Resale of MTS and MTS-like Services (Cont'd)

(A) Apportionment and Adjustment of Resold Minutes of Use (Cont'd)

(2) Terminating Services

The Company will apportion the resold terminating MTS and/or MTS-like services and terminating minutes of use for which the resale credit adjustment applies, among the access groups. Such apportionment will be based on the relationship of the terminating usage for each access group to the total terminating usage for all access groups in the LATA. For purposes of administering this provision:

Resold terminating MTS and/or MTS-like services minutes shall be only those attributable to intrastate terminating MTS/MTS-like (i.e., collect calls, third number calls and credit card calls) and shall not include interstate minutes of use or MTS/MTS-like minutes of use paid for by another party.

The resale credit adjustment shall apply for resold terminating MTS and MTS-like services and minutes of use, provided Carrier Common Line and Switched Access Charges have been assessed on such services.

(B) Same State/Telephone Company/Exchange Limitation

In order for the rate regulations to apply as set forth in (D), (E), or (F) following, the access groups and the resold MTS and/or MTS-like services must be provided in the same state (except when the same extended area service arrangement is provided in two different states by the same telephone company) in the same exchange, provided by the same Telephone Company and connected directly or indirectly. For those exchanges that encompass more than one state, the customer shall report the information by state within the exchange.

3. Carrier Common Line Access Service (Cont'd)

3.6 Resold Services (Cont'd)

3.6.4 Rate Regulations Concerning the Resale of MTS and MTS-like Services (Cont'd)

(C) Direct and Indirect Connections

Each of the access group arrangements used by the customer in association with the resold MTS and/or MTS-like services must be connected either directly or indirectly to the customer-designated premises at which the resold MTS and/or MTS-like services are terminated. Direct connections are those arrangements where the access groups and resold MTS and/or MTS-like services are terminated at the same customer designated premises.

Indirect originating connection are those arrangements where the access groups and the resold originating MTS and/or MTS-like services are physically located at different customer designated premises in the same exchange. Such different customer designated premises are connected by facilities that permit a call to flow from access groups to resold MTS and/or MTS-like services.

Indirect terminating connections are those arrangements where the access groups and resold terminating MTS and/or MTS-like services are physically located at different customer designated premises in the same exchange. Such different customer designated premises are connected by facilities that permit a call to flow from resold terminating MTS and/or MTS-like services to access groups.

(D) Access Groups - Non Equal Access Offices Only

The adjustments, as set forth here and in (E) and (F) following, will be computed separately for each access group.

When all the usage on an access group originates from and/or terminates at end offices that have not been converted to equal access, the Non Premium Access Charge per minutes as set forth in 3.9 following will apply. The access minutes which will be subject to carrier Common Line Access charges will be the adjusted originating intrastate access minutes plus the adjusted terminating intrastate access minutes for such access groups.

3. Carrier Common Line Access Service (Cont'd)

3.6 Resold Services (Cont'd)

3.6.4 Rate Regulations Concerning the Resale of MTS and MTS-like Services (Cont'd)

(D) Access Groups - Non Equal Access Offices Only (Cont'd)

The adjusted originating access minutes will be the originating intrastate access minutes less the reported resold originating MTS and/or MTS-like service minutes of use as set forth in (A)(1) preceding; but not less than zero. The adjusted terminating access minutes will be the terminating intrastate access minutes less the reported resold terminating MTS and/or MTS-like service minutes of use as set forth in (A)(2) preceding; but not less than zero.

(E) Access Groups - Equal Access Offices Only

When all the usage on an access group originates from and/or terminates at end offices that have been converted to equal access, the Premium Access Charge per minute as set forth in 3.9 following will apply. The minutes billed Carrier Common Line Access Service charges will be the adjusted originating intrastate access minutes and the adjusted terminating intrastate access minutes for such access groups.

The adjusted originating access minutes will be the originating intrastate access minutes less the reported resold originating MTS and/or MTS-like service minutes of use as set forth in (A)(1) preceding; but not less than zero. The adjusted terminating access minutes will be the terminating intrastate access minutes less the reported resold terminating MTS and/or MTS-like service minutes of use as set forth in (A)(2) preceding; but not less than zero.

3. Carrier Common Line Access Service (Cont'd)

3.6 Resold Services (Cont'd)

3.6.4 Rate Regulations Concerning the Resale of MTS and MTS-like Services (Cont'd)

(F) Access Groups - Non Equal Access and Equal Access Offices

When an access group has usage that originates from and/or terminates at both end offices that have been converted to equal access and end offices that have not been converted, both Premium and Non Premium per minute charges as set forth in 3.9 following will apply, respectively. The minutes billed Carrier Common Line Access Service charges will be the adjusted originating intrastate access minutes plus the adjusted terminating intrastate access minutes for such access groups.

The adjusted originated access minutes will be the originating intrastate access minutes less the reported resold originating MTS and/or MTS-like service minutes of use as set forth in (A)(1) preceding; but not less than zero. The adjusted terminating access minutes will be the terminating intrastate access minutes less the reported resold terminating MTS and/or MTS-like service minutes of use as set forth in (A)(2) preceding; but not less than zero.

The adjusted originating access minutes and the adjusted terminating access minutes will be apportioned between premium and non premium access minutes using end office specific usage data when available, or when usage data are not available, the premium and non premium ratios developed as set forth in 6.7.1(D)(4) following. The Premium and Non Premium per minute charges set forth in 3.9 following will apply to the respective premium and non premium access minutes determined in this manner.

3. Carrier Common Line Access Service (Cont'd)

3.6 Resold Services (Cont'd)

3.6.4 Rate Regulations Concerning the Resale of MTS and MTS-like Services (Cont'd)

(G) When the Adjustment Will be Applied to Customer Bills

The adjustment set forth in (D), (E), and (F) preceding will be made to the involved customer account no later than either the next date or the one subsequent to that, depending on when the usage report is obtained.

(H) Conversion of Billed Usage of Minutes

When the MTS and/or MTS-like usage is shown in hours, the number of hours shall be multiplied by sixty (60) to develop the associated MTS and/or MTS-like minutes of use. If the MTS and/or MTS-like usage is shown in a unit that does not show hours or minutes, the customer shall provide a factor to convert the shown units to minutes.

(I) Percent ***Interstate*** Use (PIU) (T)

The adjustment set forth in (D), (E), and (F) preceding will be made to the involved customer account after making the adjustments to the customer account as set forth in 3.8.4 following (PIU).

3.7 Reserved For Future Use

3. Carrier Common Line Access Service (Cont'd)

3. Carrier Common Line Access Service (Cont'd)

3. Carrier Common Line Access Service (Cont'd)

3. Carrier Common Line Access Service (Cont'd)

3.8 Rate Regulations

3.8.1 Billing of Charges

Carrier Common Line Charges will be billed to each Switched Access Service provided under this Tariff in accordance with the regulations as set forth in 3.8.5 following (Determination of Premium and Non Premium Charges) except as set forth in 3.6.4 preceding (Resale) and 3.8.4 following (PIU).

3.8.2 Measuring and Recording of Call Detail

When access minutes are used to determine Carrier Common Line Charges, they will be accumulated using call detail recorded by Company equipment except as set forth in 3.8.3 following (Unmeasured FGA and B Usage) and Feature Group C Operator and Automated Operator Services Systems call detail such as pay telephone sent-paid, operator-DDD,

3. Carrier Common Line Access Service (Cont'd)

3.8 Rate Regulations (Cont'd)

3.8.2 Measuring and Recording of Call Detail (Cont'd)

operator-person, collect, credit-card, third number and/or other like calls recorded by the customer. The Company measuring and recording equipment, except as set forth in 3.8.3 following (Unmeasured FGA and B Usage), will be associated with end office or local tandem switching equipment and will record each originating and terminating access minute where answer supervision is received. The accumulated access minutes will be summed on a line by line basis, by line group or by end office, whichever type of account is used by the Company, for each customer and then rounded to the nearest minute.

3.8.3 Unmeasured Feature Group A and B Usage

When Carrier Common Line Access is provided in association with Feature Group A or Feature Group B Switched Access Service in Company offices that are not equipped for measurement capabilities, an assumed intrastate access minutes of use monthly surrogate, as set forth in 6.7.8(D) following, will be used to determine Carrier Common Line Access charges.

3.8.4 Percent ***Interstate*** Use (PIU) (T)

When the customer reports interstate and intrastate use of in-service Switched Access Service, Carrier Common Line charges will be billed only to intrastate Switched Access Service access minutes based on the data reported by the customer as set forth in 2.3.14 preceding (Jurisdictional Reports), except where the Company is billing according to actuals by jurisdiction. Intrastate Switched Access Service access minutes will, after adjustment as set forth in 3.6.4 preceding (Resale), when necessary, be used to determine Carrier Common Line Charges as set forth in 3.8.5 following.

3. Carrier Common Line Access Service (Cont'd)

3.8 Rate Regulations (Cont'd)

3.8.5 Determination of Premium and Non Premium Charges

After the adjustments as set forth in 3.6.4 and 3.8.4 preceding have been applied, when necessary, to Switched Access Service access minutes, charges for the involved customer account will be determined as follows:

(A) Access minutes for all premium rated Switched Access Service subject to Carrier Common Line Charges will be multiplied by the ***Non*** Premium Access per minute rate as set forth in 3.9 following. (T)

(B) Access minutes for all non premium rate***d*** Switched Access Service subject to Carrier Common Line Charges will be multiplied by the Non Premium Access per minute rate as set forth in 3.9 following. (T)

(C) Carrier Common Line Charges shall not be reduced as set forth in 3.6.1 preceding unless Switched Access Charges, as set forth in ***Section*** 6 following, are applied to the customer's Switched Access Services. (T)

(D) Terminating Premium Access or Non Premium Access, per minute charge(s) apply to:

- All terminating access minutes of use;

- All originating access minutes of use associated with FGA Access Services where the off-hook supervisory signaling is forwarded by the customer's equipment when the called party answers;

- All originating access minutes of use associated with calls placed to 700, Toll Free Code (TFC) and 900 numbers, less ***the percentage of*** originating access minutes of use ***reported by the customer, as set forth following, that are associated with calls placed to 700, TFC and 900 numbers*** that terminate in a Switched Access Service that is assessed Carrier Common Line charges. (C) (C)

3. Carrier Common Line Access Service (Cont'd)

3.8 Rate Regulations (Cont'd)

3.8.5 Determination of Premium and Non Premium Charges (Cont'd)

(D) ***Terminating Premium Access …*** (Cont'd) (T)

For originating access minutes of use associated with calls placed to 700, TFC and 900 numbers which terminate on a Switched Access Service assessed Carrier Common Line charges, the customer shall report as follows: Effective on the first of January, April, July, and October of each year, the customer shall provide a revised report of the percentage of total Intrastate 700, TFC and 900 originating minutes of use that terminate in a Switched Access Service assessed Carrier Common Line charges. The customer shall forward the revised report to the Company, to be received no later than fifteen (15) days after the first of each such month, (i.e., January, April, July, and October). The revised report will serve as the basis for the next three months billing (i.e., beginning the first of February, May, August and November) and will be effective on the customer's bill date for that service. No prorating or backbilling will be done based on the report. In the event the customer does not supply a report, the Company will assume the percentage to be the same as that provided in the previous quarterly report. (N) (N)

(D) (D)

If a billing dispute arises concerning the customer provided report, the Company will request that the customer provide the data the customer used to ***determine the percentage. The customer shall keep records from which the reported percentage can be ascertained***. The Company will not request such data more than once a year. ***Upon request by the Company, the customer shall make records available for inspection as are reasonably necessary for purposes of verification of the percentages and*** shall supply the data within thirty (30) days of the Company request. (C) (C)

(D) (D)

For those cases in which ***a report*** has never been received from the customer, the Terminating Premium Access or Non Premium Access Per Minute Charges will apply to all 700, Toll Free Code and 900 calls. (C)

3. Carrier Common Line Access Service (Cont'd)

3.8 Rate Regulations (Cont'd)

3.8.5 Determination of Premium and Non Premium Charges (Cont'd)

(E) Originating Premium Access or Non Premium Access, Per Minute Charge(s) apply to all originating access minutes of use:

- Less those originating access minutes of use associated with FGA Access Services where the off-hook supervisory signaling is forwarded by the customer's equipment when the called party answers;

- Less all originating access minutes of use associated with calls placed to 700, TFC and 900 numbers;

- Plus all originating access minutes of use associated with calls placed to 700, TFC and 900 numbers for which the customer furnishes a report of the percentage of minutes that terminate in a Switched Access Service that is assessed Carrier Common Line charges, and for which a corresponding reduction in the number of terminating access minutes of use has been made as set forth in (D) preceding.

3.8.6 ***Reserved for Future Use*** (C)

(D)

(D)

3. Carrier Common Line Access Service (Cont'd)

3.9 Rates and Charges

The rate for Carrier Common Line Access is:

Carrier Common Line Charge

Premium Access, per minute	
- Terminating	$0.000000 (R)
- Originating	0.000000 (R)
Non Premium Access, per minute	
- Terminating	0.000000 (R)
- Originating	0.000000 (R)

4. This Section Reserved For Future Use

4. This Section Reserved For Future Use

4. This Section Reserved For Future Use (Cont'd)

4. This Section Reserved For Future Use (Cont'd)

4. This Section Reserved For Future Use (Cont'd)

4. This Section Reserved For Future Use (Cont'd)

4. This Section Reserved For Future Use (Cont'd)

4. This Section Reserved For Future Use (Cont'd)

4. This Section Reserved For Future Use (Cont'd)

4. This Section Reserved For Future Use (Cont'd)

5. Ordering Options for Switched and Special Access Service

5.1 General

This section sets forth the regulations and order related charges for Access Orders for Switched and Special Access Services. These charges are in addition to other applicable charges as set forth in other sections of this tariff.

An Access Order is an order to provide the customer with Switched Access Service or Special Access Service or to provide changes to existing services.

5.1.1 Ordering Conditions

A customer may order any number of services of the same type and between the same premises on a single Access Order. All details for services for a particular order must be identical except for those for multipoint service.

The customer shall provide all information necessary for the Company to provide and bill for the requested service. In addition to the order information required in 5.2 following, the customer must also provide:

- Customer name and premises address(es).

- Billing name and address (when different from customer name and address).

- Customer's contact name(s) and telephone number(s) for the following provisioning activities: order negotiation, order confirmation, interactive design, installation and billing.

5. Ordering Options for Switched and Special Access Service (Cont'd)

5.1 General (Cont'd)

5.1.1 Ordering Conditions (Cont'd)

Orders for Feature Group A Switched Access Service must specify the number of lines required.

Orders for Feature Groups B, C and D Switched Access Service must specify the number of trunks required. In addition, the order must indicate whether the Switched Transport ordered is for Entrance Facilities, Direct-Trunked Transport and/or Tandem-Switched Transport. For Direct-Trunked Transport, the order must specify the facility Hubs involved, channel type, channel interface and any options desired.

5.1.2 Provision of Other Services

(A) In addition to Switched and Special Access Services, other services offered under provisions of this Tariff shall be ordered with an Access Order or as set forth in (B) following. The rates and charges for these other services, as set forth in other Sections of this Tariff, will apply in addition to the Ordering Charges set forth in this Section and the rates and charges for the Access Service with which they are associated.

(B) With the agreement of the Company, other services mentioned in (A) preceding may subsequently be added to an Access Order at any time, up to and including the service date for an Access Service. When added subsequently, charges for a design change as set forth in 5.2.3(C) following will apply when an engineering review is required.

5. Ordering Options for Switched and Special Access Service (Cont'd)

5.1 General (Cont'd)

5.1.2 Provision of Other Services (Cont'd)

(C) Additional Engineering is not an ordering option, but will be applied to an Access Order when the Company determines that Additional Engineering is necessary to accommodate a customer request. Additional Engineering will only be required as set forth in 13.1 following. When it is required, the customer will be so notified and will be furnished with a written statement setting forth the justification for the Additional Engineering as well as an estimate of the charges. If the customer agrees to the Additional Engineering, a firm order will be established. If the customer does not want the service or facilities after being notified that Additional Engineering of Company facilities is required, the order will be withdrawn and no charges will apply. Once a firm order has been established, the total charge to the customer for the Additional Engineering may not exceed the estimated amount by more than 10%.

The regulations, rates and charges for Additional Engineering are as set forth in 13.1 following and are in addition to the regulations, rates and charges specified in this section.

5.1.3 Special Construction

The regulations, rates and charges for special construction are set forth in 14 following, and are in addition to the regulations, rates and charges specified in this section.

5.1.4 Discontinuance of Service

Orders for discontinuance of service must be received in writing 24 hours in (C)
advance of the customer desired disconnect date. The Company will insure that (C)
the service is disconnected on the requested date. No charges will apply after the requested disconnect date, except as defined for minimum periods in 2.4.2 preceding

5. Ordering Options for Switched and Special Access Service (Cont'd)

5.2 Access Order

An Access Order is used by the Company to provide a customer Access Service as follows:

- Switched Access Services as set forth in 6. following,
- Special Access Services as set forth in 7. following, and
- Other Services as set forth in 5.1.2 preceding.

When placing an order for Access Service, the customer shall provide, at a minimum, the following information:

- For Feature Group A Switched Access Service, the customer shall specify the number of lines and the first point of switching (i.e., dial tone office), the directionality of the service and the Switched Transport and Local Switching options desired. In addition, the customer shall also specify which lines are to be arranged in multiline hunt group arrangements and which lines are to be provided as single lines.

  The customer shall also specify that the Feature Group A is to be provided with an extension to a different exchange, if applicable. When such an extension is specified on the order, the customer must also specify the customer's premises in the different exchange with the Switched Access Feature Group A, at which the FGA extension is to be terminated.

- For Feature Group B Switched Access Service, the customer shall specify the number of trunks and the end office when direct routing to the end office is desired or the access tandem switch when routing is desired via an access tandem switch and Switched Transport options and Local Switching options desired. When ordering FGB trunks to an access tandem, the customer must also provide the Company an estimate of the amount of traffic it will generate to and/or from each end office subtending the access tandem to assist the Company in its own efforts to project further facility requirements. In addition, the customer shall also specify for terminating only access minutes whether the trunks are to be arranged in trunk group arrangements or provided as single trunks. The traffic type must also be specified using the same categories as described in 6.1.1(H) following, to enable efficient provisioning and billing functions.

5. Ordering Options for Switched and Special Access Service (Cont'd)

5.2 Access Order (Cont'd)

- When FGA is ordered in a multi-Telephone Company provided Extended Area Service area or FGB is ordered in a multi-Telephone Company access tandem arrangement, the customer must provide a copy of the order to all Secondary Exchange Carriers. Each Exchange Carrier will bill as set forth in 2.4.8 preceding.

- For Feature Groups C and D Switched Access Service, the customer shall specify the number of trunks and the end office when direct routing to the end office is desired or the access tandem switch when routing is desired via an access tandem switch and the Switched Transport and Local Switching Options desired. When ordering FGC or FGD trunks to an access tandem, the customer must also provide the Company an estimate of the amount of traffic by type it will generate to and/or from each end office subtending the access tandem to assist the Company in its own efforts to project further facility requirements. The basic traffic type must also be specified using the same categories as described in 6.1.1(H) following, to enable efficient provisioning and billing functions. When a customer orders FGD, the customer is responsible to assure that sufficient access facilities have been ordered to handle its traffic.

5. Ordering Options for Switched and Special Access Service (Cont'd)

5.2 Access Order (Cont'd)

When ordering FGD with SS7 Signaling, in addition to the information listed in 5.2 preceding, the customer shall specify the signaling point codes and trunk circuit identification codes. The customer must also identify the Common Channel Signaling/Signaling System 7 (CCS/SS7) Interconnection Service link associated with the FGD trunk group.

- For Toll Free Code (TFC) Access Service, the customer shall order in the same manner which is set forth preceding for ordering Feature Group D, except that customers may request direct connections to only those end offices and access tandems equipped with TFC Service Switching Point (TFC SSP) functionality. All TFC traffic originating from end offices not equipped with the TFC SSP function must be routed via an access tandem at which the function is available and the TFC Access Service must be ordered accordingly. TFC SSP locations are identified in the National Exchange Carrier Association, Inc. Tariff F.C.C. No. 4. The TFC Access Service customer must advise its Responsible Organization or the TFC Service Management System (TFC SMS) whether the TFC to Local Exchange Number Translation optional feature set forth in Section 6.2.5 following is desired. When the TFC to Local Exchange Number Translation feature is to be delivered to the customer, the customer must provide, via the TFC record in the TFC SMS, the ten (10) digit local exchange number (NPA-NXX-XXX) to be associated with the translated TFC number. If the TFC to Local Exchange Number Translation optional feature is used, the customer will be unable to determine that such calls originated as TFC dialed calls (e.g., 1+800-NXX-XXXX) unless the customer also orders the Flexible Automatic Number Identification (Flex ANI) optional feature.

In addition, when a local exchange number is to be delivered to the TFC Access Service customer, the customer must provide to its Responsible Organization or to the TFC Service Management System (TFC SMS), the ten (10) digit local exchange number to be associated with the translated TFC number.

If the customer desires any of the TFC Data Base Optional Service Features described in Section 6.2.5(C) following, the customer must enter this information into the TFC SMS or provide the information to its Responsible Organization for handling. Optional features are not available to customers of ***Interexchange*** Carriers (ICs) for use in connection with interLATA TFC Services. (Z)

5. Ordering Options for Switched and Special Access Service (Cont'd)

5.2 Access Order (Cont'd)

- For Interim 500 or 900 Access Service, the customer shall order in the same manner which is set forth preceding for ordering Feature Group D, except that customers may request direct connections to only those end offices designated by the Company as Interim 500 or 900 Access Service screening offices. Additionally when new NXX(s) are to be opened in the state, for exchanges served by the Company, or when existing NXX(s) are to be deleted, and such change is to occur coincident with the service date established for the order, the customer shall provide such information when placing the order for service. If the change is to occur absent the requirement for additional capacity (i.e., quantities of trunks), the customer shall notify the Company of the change as set forth in ***Sections*** 6.6.1(C) and 6.6.1(D) following. All 500 or 900 number assignments and administration shall be in accordance with the North American Numbering Plan (NANP) (T)

- For Line Information Data Base (LIDB) Access Service, the customer shall provide a LIDB Access Service Request which specifies the Originating Point Codes (OPCs) for the customer's designated Operator Service Systems (OSSs) sending the query or queries, the PIU per Originating Point Code (OPC) of the customer's OSS location, and the desired due date of the order.

- LIDB Access Service is provided in conjunction with CCS/SS7 Interconnection Access Service, as set forth in ***Section*** 6.1.3(B)(5) following. The customer must arrange for CCS/SS7 Interconnection to the two (2) Company interconnecting Signal Transfer Points (STPs) located in Johnson City, Tennessee and Bristol, Tennessee in order to utilize LIDB Access Service. (T)

For Operator Transfer Service, it is not necessary to order Operator Inward Assistance Service. The customer must specify whether Feature Group B, Feature Group C, or Feature Group D Switched Access Service will be used to interconnect between the OSS Tandem(s) and the customer's premises and whether or not operator functionality, coin station control, or both are to be provided by the customer. (N)

Operator Service System (OSS) Tandem interconnection requirements are specified in Section 16.2 following. Information regarding OSS Tandem locations is contained in National Exchange Carrier Association, Inc. Tariff F.C.C. No. 4. (N)

5. Ordering Options for Switched and Special Access Service (Cont'd)

5.2 Access Order (Cont'd)

- For all Special Access Services, the customer must specify the customer designated premises or Hubs involved, the type of service (e.g., Voice Grade, High Capacity, etc.), the channel interface, technical specification package and options desired. For multipoint services, the channel interface at each premises may, at the request of the customer, be different but all such interfaces shall be compatible.

- When a customer desires Switched Access Service to an end office that is a remote switching office, the customer must order to the host office which controls the remote switching office since all traffic to and/or from a remote switching office must be routed through the host office.

  Special Access Service may be ordered for connection with Switched Access Service at Company designated WATS Serving Offices (WSOs) and may be ordered separately by a customer other than the customer which ordered the Switched Access Service. For this Special Access Service, the customer must also specify the type of calling (i.e., originating only or terminating only) for which the service is to be provided. Additionally, when the necessary screening functions are not provided at the wire center which serves the customer's originating or terminating premises, the Company will provide the service to the nearest wire center where capacity exists. In these circumstances, the customer will be so notified and the order will be changed to designate the appropriate premises. No charge will apply for the change.

- For Common Channel Signaling/Signaling System 7 (CCS/SS7) Interconnection Service, the customer must provide the following information to the Telephone Company at the time of ordering:

  - Number of access links
  - Link Type
  - Signaling Link Code
  - Customer Signaling Point Code
  - Common Language Location Identifier (CLLI) code of the Company interconnecting Signal Transfer Point
  - Contact telephone number for installation and maintenance of the customer’s designated premises

  When ordering CCS/SS7 Interconnection Service, the customer will provide an estimate of total annual volume and busy hour busy month volume projected for a period of three years. The forecast should be itemized by message type. The Company will utilize this forecast in its own efforts to project further facility requirements.

5. Ordering Options for Switched and Special Access Service (Cont'd)

5.2 Access Order (Cont'd)

When Switched Access Service is ordered in trunks, the trunks may be determined by the customer in the following manner. For each day the customer shall determine the highest number of trunks in use for a single hour. The customer shall, for the same hour period (i.e., busy hour), pick the twenty (20) consecutive business days in a calendar year which add up to the largest number of trunks in use. The customer shall then determine the average busy hour trunks by dividing the largest number of trunks in use figure, for the same hour period, for the consecutive twenty (20) business day period by twenty (20). This computation shall be performed for each end office and/or access tandem the customer wishes to serve.

Where the Special Access Service is exempt from the Special Access Surcharge as set forth in 7.4.2 following, the customer shall furnish with the order the certification as set forth in that Section.

5. Ordering Options for Switched and Special Access Service (Cont'd)

5.2 Access Order (Cont'd)

5.2.1 Access Order Service Date Intervals

The Company will make every effort to provide Access Service to customers on the date specified by the customer. In situations where the Company cannot meet the service date requested, the Company will guarantee installation by the Firm Order ***Confirmation*** (FOC) date in accordance with the provisions set forth in ***Section*** 2.4.9 preceding. (Z)

To the extent the Access Service can be made available with reasonable effort, the Company will provide the Access Service in accordance with the customer's requested interval, subject to the following conditions:

(1) Special Construction or Specialized Services or Arrangements are not requested.

(2) Specialized equipment is not required.

(3) Other Telephone Companies are not involved in the service installation.

(4) Customer actions prevent or inhibit installation of the service (e.g., the customer’s premises is inaccessible, the customer changes interface requirements or the customer is not ready to accept the service).

(5) Access Service will be installed during Company business day. If a customer requests that installation be done outside of normally scheduled working hours and the Company agrees to this request, the customer will be subject to applicable Additional Labor Charges as set forth in ***Section*** 13.2.7 following. (T)

5. Ordering Options for Switched and Special Access Service (Cont'd)

5.2 Access Order (Cont'd)

5.2.1 Access Order Service Date Intervals (Cont’d)

5. Ordering Options for Switched and Special Access Service (Cont'd)

5.2 Access Order (Cont'd)

5.2.2 Access Order Charge

The Access Order Charge is designed to recover the costs associated with processing the customer's order, and will apply on a per order basis. This charge will be in addition to any other applicable nonrecurring charges as set forth in 6., 7. and/or 13. following.

The Access Order Charge does not apply when service rearrangements are ordered in connection with a customer rerouting trunks from tandem to end office or from end office to tandem transport, or when the installation of additional trunks is required for the rearrangement, as set forth in 6.7.1(C)(3) following.

At the time the customer places an Access Order with the Company, the customer will be informed that if the Access Order is canceled prior to the installation of access facilities, where installation of access facilities has commenced, a Cancellation Charge as set forth in 5.2.4(B) following will apply.

	(D)	Charge	
Access Order Charge			
- Per Order		$0.00	(T)

(D)

(D)

5. Ordering Options for Switched and Special Access Service (Cont'd)

5.2 Access Order (Cont'd)

5.2.3 Access Order Modifications

The customer may request a modification of its Access Order at any time prior to notification by the Company that service is available for the customer's use. The Company will make every effort to accommodate a requested modification when it is able to do so with the normal work force assigned to complete such an order within normal business hours. If the modification cannot be made with the normal work force during normal business hours, the Company will notify the customer. If the customer still desires the Access Order modification, the Company will schedule a new service date. All charges for Access Order modifications will apply on a per Access Order basis.

When Telephone Company personnel are dispatched to install a customer's service on the requested service date, and the customer advises the Telephone Company personnel that service cannot be accepted at that time, the customer shall be responsible for payment of additional labor charges for the time incurred by Telephone Company personnel. The additional labor charges will be applied on a per half-hour, per technician basis as set forth in Section 13.2 following. (N) (N)

Any increase in the number of Special Access Service channels or Switched Access Service lines, trunks, CCS/SS7 Port Terminations or LIDB Originating Point Codes (OPCs) of capacity will be treated as a new Access Order (for the increased amount only).

5. Ordering Options for Switched and Special Access Service (Cont'd)

5.2 Access Order (Cont'd)

5.2.3 Access Order Modifications (Cont'd)

(A) Service Date Change

Access Order Service dates for the installation of new services or rearrangements of existing services may be changed, but the new service date may not exceed the original service date by more than one hundred and twenty (120) calendar days. When, for any reason, the customer indicates that service cannot be accepted for a period not to exceed one hundred and twenty (120) calendar days, the Company will accordingly delay the start of service. If the customer requested service date is more than one hundred and twenty (120) calendar days after the original service date, the order will be canceled by the Company and reissued with the appropriate Cancellation Charges applied unless the customer indicates that billing for the service is to commence as set forth in 5.2.4(A) following.

A new service date may be established that is prior to the original date specified by the customer if the Company determines it can accommodate the customer's request without delaying service dates for orders of other customers.

5. Ordering Options for Switched and Special Access Service (Cont'd)

5.2 Access Order (Cont'd)

5.2.3 Access Order Modifications (Cont'd)

(B) Partial Cancellation Charge

Any decrease in the number of ordered Special Access Service channels or Switched Access Service lines, trunks, CCS/SS7 Port Terminations or LIDB Originating Point Codes (OPCs) will be treated as a partial cancellation and the charges as set forth in 5.2.4(B) following will apply.

5. Ordering Options for Switched and Special Access Service (Cont'd)

5.2 Access Order (Cont'd)

5.2.3 Access Order Modifications (Cont'd)

(C) Design Change Charge

The customer may request a design change to the service ordered. A design change is any change to an Access Order which requires engineering review. An engineering review is a review by Company personnel of the service ordered and the requested changes to determine what changes in the design, if any, are necessary to meet the changes requested by the customer. Design changes include such things as the addition or deletion of optional features or functions or a change in the type of Transport Termination (Switched Access only), type of channel interface, type of Interface Group or technical specification package. Design changes do not include a change of customer premises, end user premises, end office switch, Feature Group type or Special Access Service channel type. Changes of this nature will require the issuance of a new order and the cancellation of the original order with appropriate cancellation charges applied.

5. Ordering Options for Switched and Special Access Service (Cont'd)

5.2 Access Order (Cont'd)

5.2.3 Access Order Modifications (Cont'd)

(C) Design Change Charge (Cont'd)

The Company will review the requested change, notify the customer whether the change is a design change, if it can be accommodate***d*** and if a new service date is required. If the customer authorizes the Company to proceed with the design change, a Design Change Charge will apply. The Design Change Charge will apply on a per order per occurrence basis, for each order requiring a design change. (Z)

If, as a result of the change, the original service date cannot be met without the Company incurring additional labor, and the Customer provides authorization to the Company to proceed, then charges as set forth in Section 13 will apply. If the customer is unwilling to pay such costs, the service date must be changed in accordance with (A) preceding as a result of the design change. (N) (N)

The applicable charge is:

	Charge
Design Change Charge,	
- Per Order	$23.00

(D)
(D)

5. Ordering Options for Switched and Special Access Service (Cont'd)

5.2 Access Order (Cont'd)

5.2.3 Access Order Modifications (Cont'd)

5. Ordering Options for Switched and Special Access Service (Cont'd)

5.2 Access Order (Cont'd)

5.2.3 Access Order Modifications (Cont'd)

5. Ordering Options for Switched and Special Access Service (Cont'd)

5.2 Access Order (Cont'd)

5.2.4 Cancellation of an Access Order

(A) A customer may cancel an Access Order for the installation of service at any time prior to notification by the Company that service is available for the customer's use. The cancellation date is the date the Company receives written or verbal notice from the customer that the order is to be ***canceled. If*** (C) a customer or a customer's end user is unable to accept Access Service within 30 calendar days of the ***latest agreed upon*** service date, the customer (C) has the choice of the following options:

- The Access Order shall be canceled and charges set forth in (B) following will apply, or

- Billing for the service will commence.

In any event, the cancellation date or the date billing is to commence (depending on which option is selected by the customer) shall be the 31st day beyond the ***latest agreed upon*** service date of the Access Order. (C)

(B) When a customer cancels an Access Order for the installation of service, a Cancellation Charge will apply as follows:

(1) Costs incurred in conjunction with the provision of Switched or Special Access Service start on the Firm Order Confirmation date.

(2) When the customer cancels an Access Order or portion thereof prior to the Firm Order Confirmation date, no charges shall apply

5. Ordering Options for Switched and Special Access Service (Cont'd)

5.2 Access Order (Cont'd)

5.2.4 Cancellation of an Access Order (Cont'd)

(B) (Cont'd)

(3) When the customer cancels an Access Order on or after the Firm Order Confirmation date, a Cancellation Charge will apply.

(4) Calculation of the Cancellation Charge is as follows:

(a) If the customer has requested a Service Date Change beyond the original service date, the resulting additional installation days are included in the service interval.

(b) When counting the number of days in the service interval or the number of days from the Firm Order Confirmation date through the Access Order Cancellation Date, the Firm Order Confirmation date will count as day one.

(c) Except as set forth in (d) following, the Cancellation Charge will be a percentage of the total of all nonrecurring charges associated with the access order, or that part of the order being cancelled. This percentage is calculated by dividing the number of days from the Firm Order Confirmation date through the Cancellation Date by the number of days in the agreed to service interval. The Cancellation Charge is then developed by multiplying the nonrecurring charges associated with installation of the cancelled service by the calculated percentage.

(d) The cancellation charge for OC3, OC12 or OC48 services without separate nonrecurring installation charges (e.g. OptiPoint Service) will be calculated as a percentage of the Optical Service Charge set forth in Section 6.8.7 ***for each node associated with the*** (T)
cancelled order. This percentage is calculated as (T)
specified in (c) preceding.

5. Ordering Options for Switched and Special Access Service (Cont'd)

5.2 Access Order (Cont'd)

5.2.4 Cancellation of an Access Order (Cont'd)

5. Ordering Options for Switched and Special Access Service (Cont'd)

5.2 Access Order (Cont'd)

5.2.4 Cancellation of an Access Order (Cont'd)

5. Ordering Options for Switched and Special Access Service (Cont'd)

5.2 Access Order (Cont'd)

5.2.4 Cancellation of an Access Order (Cont'd)

(C) When a customer cancels an order for the discontinuance of service, no charges apply for the cancellation.

(D) If the Company misses a service date by more than thirty (30) days due to circumstances over which it has direct control (excluding, e.g., Acts of God, governmental requirements, work stoppages and civil commotions), the customer may cancel the Access Order without incurring Cancellation Charges.

5.2.5 Selection Of Facilities For Access Orders

(A) When a customer places an Access Order, it may choose to utilize facilities previously purchased as a facility to a Hub. If the customer has a High Capacity interface for use with Switched Access Service Interface ***Groups 6*** (C)
and 9, or has a Special Access Service facility purchased to a Hub, the (C)
customer must request that specific channels be used to implement the Access Order. If a facility assignment is not specified by the customer, the Company will provide the service from available inventory as discussed in 5.3 following.

(B) For all other Access Orders, the option to request a specific transmission path or channel is not provided except as provided for under Special Facilities Routing as set forth in ***Section*** 11 following. (T)

5. Ordering Options for Switched and Special Access Service (Cont'd)

5.2 Access Order (Cont'd)

5.2.6 Minimum Period

(A) Except as set forth in (B), (C), ***following and in Sections 6.2.9, 6.7.2,*** 7.4.4, 8.1.5(B), 8.3.5(A), and ***13.3.5 following***, the minimum period for which Access Service is provided and for which charges are applicable, is one month. (Z) (Z)

(B) The minimum period for Switched Access Service Feature Group D is three months.

(C) Reserved For Future Use

(D) Service Rearrangements as set forth in Sections 6.7.1(C)(3), 7.4.1(C)(3), and 18.2.4(C) following for Switched and Special Access Services respectively, may be made without a change in minimum period requirements.

(E) Changes other than those identified in Sections 6.7.1(C)(3), 7.4.1(C)(3), or 18.2.4(C) following will be treated as a discontinuance of the existing service and an installation of a new service. All associated nonrecurring charges will apply for the new service. A new minimum period will be established for the new service. The customer will also remain responsible for all outstanding minimum period obligations associated with the disconnected service.

The changes listed below are those which will be treated as a discontinuance and installation of service and for which a new minimum period will be established.

5. Ordering Options for Switched and Special Access Service (Cont'd)

5.2 Access Order (Cont'd)

5.2.6 Minimum Period (Cont'd)

(E) (Cont'd)

(1) A change of customer record (i.e., Access Service is provided to and billed to a different entity).

(2) A move to a different building as set forth in 6.7.7(B) or 7.4.5(B) following.

(3) A change in type of service (i.e., Switched Access to Special Access, one type of Special Access to another, or one type of Switched Access Feature Group to another except as set forth in 6.7.6 following).

(4) A change in the type of Special Access Service Channel Termination.

(5) A change in Switched Access Service or Directory Assistance Service Interface Group.

(6) Change in Switched Access Service traffic type.

(7) Change from two-point to multipoint Special Access Service or from multipoint to two-point Special Access Service.

5.2.7 Minimum Period Charges

When Access Service is disconnected at the customer's request prior to the expiration of the minimum period, charges are applicable for the balance of the minimum period.

The Minimum Period Charge for services provided with a one month minimum period will be determined as follows:

5. Ordering Options for Switched and Special Access Service (Cont'd)

5.2 Access Order (Cont'd)

5.2.7 Minimum Period Charges (Cont'd)

(A) For Switched Access Service, the charge for a month or fraction thereof is equal to the applicable minimum monthly charge for the capacity as set forth in 6.7.4 following.

(B) For Special Access Service, the charge for a month or fraction thereof is the applicable monthly rates for the service as set forth in 7.5 following.

The Minimum Period Charge for Feature Group D Switched Access Service will be determined as set forth in 2.4.2 preceding.

All applicable nonrecurring charges for the service will be billed in addition to the Minimum Period Charge.

5.2.8 Shared Use Facilities

Shared Use (i.e., Switched and Special Access Services provided over the same analog or digital high capacity facilities) is allowed. Shared use facilities to a Hub will be ordered and provided as Special Access Service. While shared use is allowed, individual services utilizing these facilities must be ordered either as Switched Access Service or Special Access Service. When placing the order for the individual service(s), the customer must specify a channel assignment for each service ordered.

5.3 Available Inventory

Available inventory is limited and does not include facilities previously ordered. The Company will make every reasonable effort to maintain sufficient available inventory to provide Access Service in accordance with customers' requested service date intervals. To the extent that service can be provided, Access Orders will be satisfied from available inventory.

5. Ordering Options for Switched and Special Access Service (Cont'd)

5.4 Switched Access Service Minimum Capacity Requirements

5.4.1 When Switched Access Service Access Connections are ordered under Access Orders, they will be provided subject to the minimum capacity provisions set forth in 5.1.1 preceding and in 5.4.2 through 5.4.7 following.

5.4.2 There is no minimum capacity for Interface Groups 1 and 2. The minimum capacity provided for Interface Groups 6 and 9 and for which charges are applicable, are set forth in 5.4.6 following.

5.4.3 Reserved for Future Use

5.4.4 When a customer requests analog or digital Interface ***Groups 6 and*** 9, the customer is required to order at a minimum, sufficient capacity to utilize 70 percent of the channels. (C)

5.4.5 For the purpose of administering the minimum capacity provisions, Access Orders for Access Connection Interface Groups for different Feature Groups may be grouped together if the facilities provided for all the connections are the same and terminate in the same facilities terminal in the same Telephone Company access tandem or end office.

5. Ordering Options for Switched and Special Access Service (Cont'd)

5.4 Switched Access Service Minimum Capacity Requirements (Cont'd)

5.4.6 The following table provides the total capacity of the interface and the thresholds for minimum order requirements

Interface Type	Interface Name	Total Capacity (Channels)	Minimum Capacity (Channels)
Analog	Group	12	9
Analog	Supergroup	60	42
Analog	Mastergroup	600	420
Digital	DS1	24	17
Digital	DS1C	48	34
Digital	DS3	672	471

(D)

(D)

The Company will not provide these Interface Groups when less than 70 ***percent*** of the capacity is ordered. For purposes of groups, as set forth in 5.4.5 preceding, it shall be assumed that Feature Group A, B, C, or D minutes may be combined. (T)

5.4.7 When Switched Access Service provided from available inventory is disconnected, and the disconnect causes the in service capacity to fall below the minimum requirements, the Company will, at the option of the customer,

(A) Disconnect all the service subject to the minimum capacity requirements, and all appropriate charges will apply, or

(B) Move the remaining in service capacity to a lesser capacity interface.

5. Ordering Options for Switched and Special Access Service (Cont'd)

5.5 ***Reserved for future use*** (T)

(D)

(D)

5. Ordering Options for Switched and Special Access Service (Cont'd)

5.5 ***Reserved for future use*** (Cont'd) (T)

(D)

(D)

5. Ordering Options for Switched and Special Access Service (Cont'd)

5.6 Reserved For Future Use

5. Ordering Options for Switched and Special Access Service (Cont'd)

5. Ordering Options for Switched and Special Access Service (Cont'd)

5. Ordering Options for Switched and Special Access Service (Cont'd)

5. Ordering Options for Switched and Special Access Service (Cont'd)

6. Switched Access Service

6.1 General

Switched Access Service, which is available to customers for their use in furnishing their services to end users, provides a two-point electrical communications path between a customer's premises and an end user's premises. It provides for the use of common terminating, common switching, switched transport facilities and common subscriber plant of the Company. Switched Access Service provides for the ability to originate calls from an end user's premises to a customer's premises, and to terminate calls from a customer's premises to an end user's premises in the LATA where it is provided. Specific references to material describing the elements of Switched Access Service are provided in 6.1.1 and 6.1.3 following.

Rates and charges for Switched Access Service depend generally on its use by the customer, i.e., for MTS or WATS Services, MTS-WATS equivalent services or other services (e.g., Foreign Exchange Service), and whether it is provided in a Company end office that is equipped to provide equal access (Feature Group D Access, described in 6.1.1(D) following). Rates and charges for Switched Access Service are set forth in 6.8 following. The application of rates for Switched Access Service is described in 6.7 following. Rates and charges for services other than Switched Access Service, e.g., a customer's interLATA and intraLATA Toll Message Service, may also be applicable when Switched Access Service is used in conjunction with these other services. Descriptions of such applicability are provided in 6.2.1(A)(7), 6.2.1(B)(4), 6.2.2(A)(5), 6.2.2(B)(4), 6.2.3(A)(5), 6.2.4(A)(4), 6.7.10 and 6.7.12 following.

6.1.1 Switched Access Service Arrangements and Manner of Provision

Switched Access Service is provided in seven (7) service categories of standard and optional features called Feature Groups A through D, Interim 500 Access Service, Toll Free Code (TFC) Access Service and 900 Access Service. They are differentiated by their technical characteristics, e.g., line side vs. trunk side connection at the Company entry switch, and the manner in which an end user accesses them in originating calls, e.g., with or without an access code. Following is a brief description of each type of Switched Access Service arrangement.

6. Switched Access Service (Cont'd)

6.1 General (Cont'd)

6.1.1 Switched Access Service Arrangements and Manner of Provision (Cont'd)

(A) Feature Group A (FGA)

FGA Access provides line side access to Company end office switches with an associated seven digit local telephone number for the customer's use in originating and terminating communications to an Interexchange Carrier's intrastate service or a customer provided intrastate communications capability. The customer must specify the Interexchange carrier to which the FGA service is connected or in the alternative, specify the means by which the FGA access communications is transported to another state. A more detailed description of FGA Access is provided in 6.2.1 following.

(B) Feature Group B (FGB)

FGB Access provides trunk side access to Company end office switches with an associated uniform 950-0XXX or 950-1XXX access code for the customer's use in originating and terminating communications to an Interexchange Carrier's intrastate service or a customer provided intrastate communications capability. The customer must specify the Interexchange Carrier to which the FGB service is connected, or in the alternative, specify the means by which the FGB access communications is transported to another state. A more detailed description of FGB Access is provided in 6.2.2 following.

6. Switched Access Service (Cont'd)

6.1 General (Cont'd)

6.1.1 Switched Access Service Arrangements and Manner of Provision (Cont'd)

(C) Feature Group C (FGC)

FGC Access, which is available only to providers of MTS and WATS, provides trunk side access to Company end office switches for the customer's use in originating and terminating communications. This service is available in all end offices which are not equipped for Feature Group D Local Switching. Existing FGC Access will be converted to Feature Group D Access when it becomes available in an end office. A more detailed description of FGC Access is provided in 6.2.3 following.

(D) Feature Group D (FGD)

FGD Access provides trunk side access to Company end office switches with an associated uniform ***101XXXX CAC*** for the customer's use in originating (C) and terminating communications. WATS Access Service is a type of Special Access Service that is provided for use with Feature Group D Switched Access Service. Special Access Service used in connection with Switched Access Service connects a customer-designated premises with a WATS Serving Office. Special Access Service, as described in 7.2 following, may be ordered separately by an entity other than the customer ***that*** orders the FGD (T) Switched Access Service. FGD is also available with End User Presubscription as set forth in 6.2.4.(A)(6) and 13 following. Presubscribing end users do not need to use the ***101XXXX CAC*** to access the customer. (C) Special Access Services are ordered as set forth in 5.2 preceding. A more detailed description of FGD Access is provided in 6.2.4 following.

6. Switched Access Service (Cont'd)

6.1 General (Cont'd)

6.1.1 Switched Access Service Arrangements and Manner of Provision (Cont'd)

(E) Toll Free Code (TFC) Access Service

TFC Access Service is an originating service that is provided via TFC Access Service switched trunk groups, or may be provided in conjunction with FGB, FGC or FGD. The service provides for the forwarding of end user dialed TFC calls to a Company Service Switching Point (SSP) which will initiate a query to the Company's TFC data base to perform the customer identification function. The call is forwarded to the appropriate customer based on the dialed TFC number. The customer has the option of having the TFC dialed number (i.e., 800-NXX-XXXX) or, if the TFC to Local Exchange Number Translation optional feature is specified, a translated ten (10) digit local exchange number (i.e., NPA-NXX-XXXX) delivered to the customer premises.

When TFC Access Service traffic is combined in the same trunk group arrangement with other traffic, usage for the TFC Access Service traffic will be aggregated with the other traffic for billing purposes. When separate trunk groups are provided for TFC Access Service, usage will be provided separately. A more detailed description of TFC Access Service is as set forth in 6.2.5. following.

(F) 900 Access Service

900 Access Service is an originating service that is provided via 900 Access Service switched trunk groups, or may be provided in conjunction with FGB, FGC or FGD. The service provides the customer identification function (900 NXX screening) based on the first six (6) digits of the dialed 900 number. When a 1+900+NXX+XXXX call is originated by an end user, a customer identification function determines the customer to which the call is to be routed based on the NXX dialed.

6. Switched Access Service (Cont'd)

6.1 General (Cont'd)

6.1.1 Switched Access Service Arrangements and Manner of Provision (Cont'd)

(F) 900 Access Service (Cont'd)

When a customer requests that the Company open a 900 NXX access code for exchanges served by the Company within a specified state, LATA or service area subtending an access tandem, the order must include the provisioning of all Company offices within that state, LATA or all offices subtending the specified access tandem.

When 900 Access Service traffic is combined in the same trunk group arrangement with other traffic, usage for the 900 Access Service traffic will be aggregated with the other traffic for billing purposes. When separate trunk groups are provided for 900 Access Service, usage will be provided separately. A more detailed description of 900 Access Service is as set forth in 6.2.6 following.

(G) Interim 500 Access Service

Interim 500 Access Service is an originating service that is provided via Interim 500 Access Service switched trunk groups, or may be provided in conjunction with FGC or FGD. The Service provides the customer identification function (500 NXX screening) based on the first six digits of the dialed 500 number. When a 1+500+NXX+XXXX or 0+500+NXX+XXXX call is originated by an end user, a customer identification function determines the customer to which the call is to be routed based on the NXX dialed.

When a customer requests that the Company open a 500 NXX access code for exchanges served by the Company within a specified state, LATA or service area subtending an access tandem, the order must include the provisioning of all Company offices within that state, LATA or all offices subtending the specified access tandem.

When Interim 500 Access Service traffic is combined in the same trunk arrangement with other traffic, usage for the Interim 500 Access Service traffic will be aggregated with the other traffic for billing purposes. When separate trunk groups are provided for Interim 500 Access Service, usage will be provided separately. A more detailed description of Interim 500 Access Service is as set forth in 6.2.7 following.

6. Switched Access Service (Cont'd)

6.1 General (Cont'd)

6.1.1 Switched Access Service Arrangements and Manner of Provision (Cont'd)

(H) Manner of Provision

Switched Access is furnished in either quantities of lines or trunks. FGA Access is furnished on a per-line basis, and FGB, FGC and FGD are furnished on a per-trunk basis.

Trunks are differentiated by type and directionality of traffic carried over a Switched Access Service arrangement. Differentiation of traffic is necessary for the Company to properly design Switched Access Service to meet the traffic carrying capacity requirement of the customer.

There are three (3) major traffic types. These are: Originating, Terminating and Directory Assistance. Originating traffic type represents access capacity within a LATA for carrying traffic from the end user to the customer; Terminating traffic type represents access capacity within a LATA for carrying traffic from the customer to the end user; and, Directory Assistance traffic type represents access capacity within an exchange for carrying Directory Assistance traffic from the customer to a Directory Assistance location. When ordering capacity for FGB Access, FGC Access or FGD Access, the customer must at a minimum specify such access capacity in terms of Originating traffic type and/or Terminating traffic type. Directory Assistance Access Service is ordered as set forth in Section 9 of the Embarq Local Operating Companies Tariff (T)
F.C.C. No. 1. (T)

Because some customers will wish to further segregate their originating FGC or FGD traffic into separate trunk groups, Originating traffic type is further categorized into Domestic, 500, TFC, 900 and Operator. Domestic traffic type represents access capacity for carrying only Domestic traffic other than 500, TFC, 900 and Operator traffic; and, 500, TFC, 900 and Operator traffic types represent access capacity for carrying, respectively, only 500, TFC, 900 or Operator traffic. When ordering such types of access capacity, the customer must specify Domestic, 500, TFC, 900 or Operator type.

6. Switched Access Service (Cont'd)

6.1 General (Cont'd)

6.1.2 WATS Access Line Service

WATS Access Line Service is a type of Voice Grade Special Access Service that is provided for use with Switched Access Service. WATS Access Line Service connects an end user premises with a WATS or WATS-type Serving Office. Special Access Services are ordered as set forth in 7. following.

6.1.3 Rate Categories

There are ***three (3)*** rate categories which apply to Switched Access Service: (C)

(D)

- Switched Transport (described in 6.1.3(B) following)
- Local Switching (described in 6.1.3C following)
- Common Line (described in 3. and 4. preceding)

In addition to these three (3) rate categories, ***there*** are also charges which apply only to Interim 500, TFC and 900 Access Service. The description and application of TFC Access Service Charges are set forth in 6.1.3(D) following. The description and application of 900 Access Service Charges are set forth in 6.1.3(E), 6.7.1(C)(4) and 6.7.16 following. The description and application of 500 Access Service Charges are set forth in 6.1.3 (F), 6.7.1(C)(5) and 6.7.16 following. (C)

6. Switched Access Service (Cont'd)

6.1 General (Cont'd)

6.1.3 Rate Categories (Cont'd)

The following diagrams depict generic views of the components of Switched Access Service and the manner in which the components are combined to provide a complete Access Service.

(A) DIRECT-TRUNKED TRUNK SIDE SERVICES AND ORIGINATING LINE SIDE SERVICES

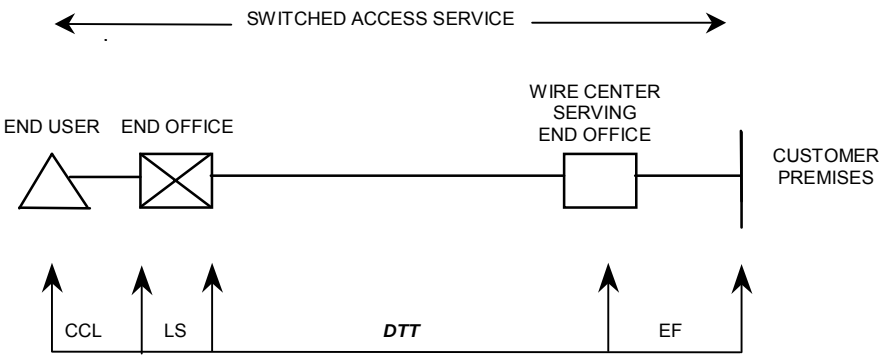

(T)

Note:
An exception to mileage measurement for originating line side services is set forth in 6.7.13 following (Determining Switched Transport Mileage and Charges)

CCL: CARRIER COMMON LINE
LS: LOCAL SWITCHING
DTT: DIRECT-TRUNKED TRANSPORT
EF: ENTRANCE FACILITY

(N)

6. Switched Access Service (Cont'd)

6.1 General (Cont'd)

6.1.3 Rate Categories (Cont'd)

(B) TANDEM-SWITCHED TRUNK SIDE SERVICES

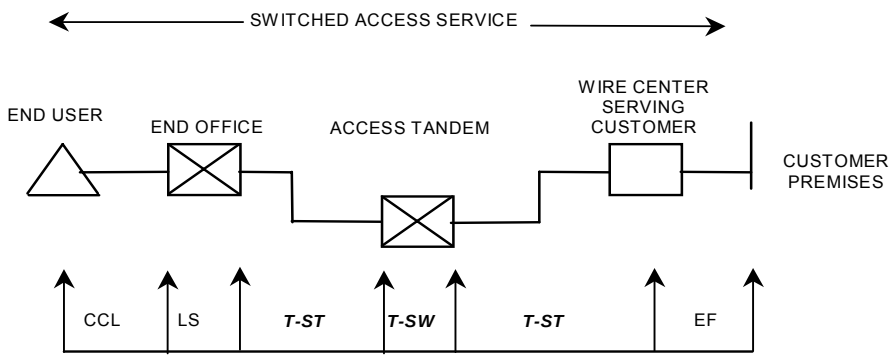

(T)

CCL: CARRIER COMMON LINE (T)
LS: LOCAL SWITCHING
T-ST: TANDEM-SWITCHED TRANSMISSION ***(FIXED AND PER MILE)*** (N)
T-SW: TANDEM SWITCHING
EF: ENTRANCE FACILITY

(C) TERMINATING LINE SIDE SERVICES

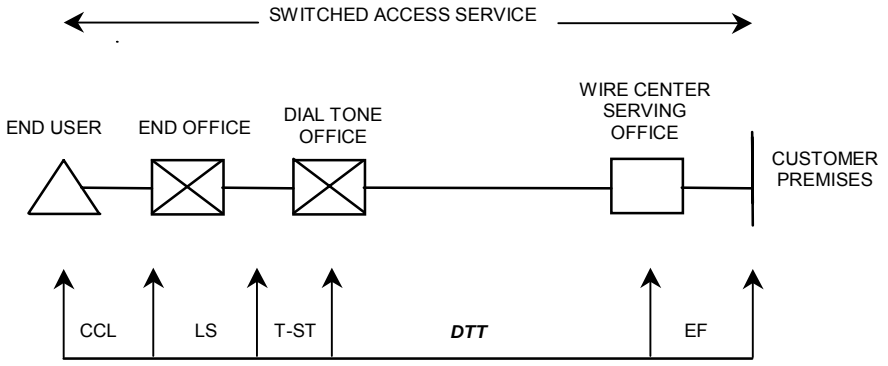

(T)

CCL: CARRIER COMMON LINE (T)
LS: LOCAL SWITCHING
T-ST: TANDEM-SWITCHED TRANSMISSION ***(FIXED AND PER MILE)*** (N)
DTT: DIRECT-TRUNKED TRANSPORT
EF: ENTRANCE FACILITY

6. Switched Access Service (Cont'd)

6.1 General (Cont'd)

6.1.3 Rate Categories (Cont'd)

(D) DIRECT-TRUNKED HOST/REMOTE ARRANGEMENTS

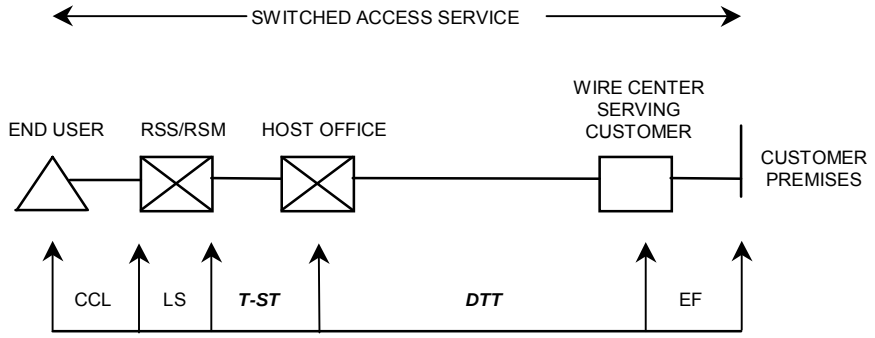

(T)

CCL:	CARRIER COMMON LINE
LS:	LOCAL SWITCHING
T-ST:	TANDEM-SWITCHED TRANSMISSION ***(FIXED AND PER MILE)***
DTT:	***DIRECT-TRUNKED TRANSPORT*** (T)
EF:	ENTRANCE FACILITY
RSS/RSM:	REMOTE SWITCHING SYSTEM/REMOTE SWITCHING MODULE (N)

(E) TANDEM-SWITCHED HOST/REMOTE ARRANGEMENTS

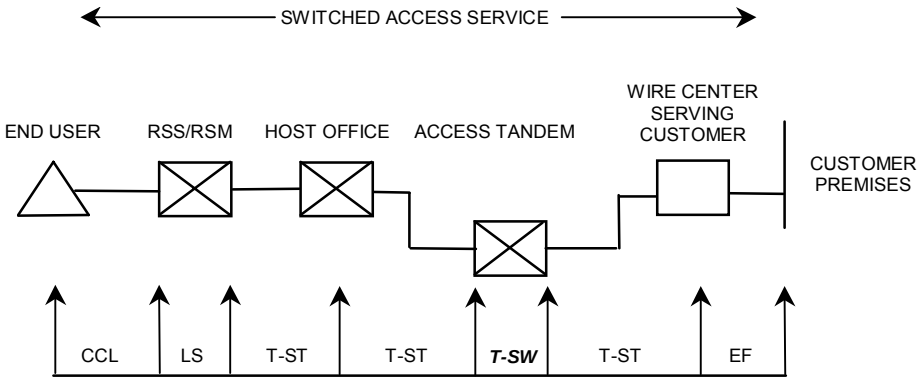

(T)

CCL:	CARRIER COMMON LINE
LS:	LOCAL SWITCHING
T-ST:	TANDEM-SWITCHED TRANSMISSION ***(FIXED AND PER MILE)***
T-SW:	***TANDEM SWITCHING***
EF:	ENTRANCE FACILITY (T)
RSS/RSM:	REMOTE SWITCHING SYSTEM/REMOTE SWITCHING MODULE (N)

6. Switched Access Service (Cont'd)

6.1 General (Cont'd)

6.1.3 Rate Categories (Cont'd)

(A) ***Reserved For Future Use*** (C)

(D)

(D)

(B) Switched Transport

The Switched Transport rate category provides the transmission facilities between the customer's premises and the end office switch(es) where the customer's traffic is switched to originate or terminate the customer's communications.

Switched Transport provides one-way or two-way voice frequency transmission paths composed of facilities determined by the Company which permit the transport of calls in the originating direction and in the terminating direction, though not simultaneously. This voice frequency transmission path may be comprised of any form or configuration of plant capable of, and typically used in, the telecommunications industry for transmitting voice and associated telephone signals within the frequency bandwidth of approximately 300 to 3000 Hz.

6. Switched Access Service (Cont'd)

6.1 General (Cont'd)

6.1.3 Rate Categories (Cont'd)

(B) Switched Transport (Cont'd)

Switched Transport is comprised of an Entrance Facility, Direct-Trunked Transport, Tandem-Switched Transport and various optional features and functions. Descriptions of the Switched Transport components are provided in (1) through (4) following.

Switched Transport is ordered under the Access Order provisions set forth in 5. preceding. Ordering provisions as set forth in 2.4.8 preceding will apply when more than one (1) Exchange Telephone Company is involved in the provision of a Switched Transport facility.

(1) Entrance Facility

An Entrance Facility provides the communication path between a customer's premises and the Company's serving wire center for that premises. The Entrance Facility is dedicated to the use of a single customer and is available for use with all line side and trunk side Switched Access Services. An Entrance Facility is provided even if the customer's premises and the serving wire center are located in the same building.

The Entrance Facility rate element includes the transmission medium of the facility as well as certain circuit equipment that is used at the ends of the facility and employed to provision the channels on the transmission medium. The Entrance Facility rate element also includes an Interface Group, as set forth in 6.4.3 following, which defines the technical characteristics and types of signaling capability associated with the connection (i.e., Voice Grade, DS1, DS3, ***STS1 or OptiPoint***) that comprises the Entrance Facility. The following types of Entrance Facility are available. (C)

6. Switched Access Service (Cont'd)

6.1 General (Cont'd)

6.1.3 Rate Categories (Cont'd)

(B) Switched Transport (Cont'd)

(1) Entrance Facility (Cont'd)

(a) Voice Grade Entrance Facility

Voice Grade Entrance Facility is provided in quantities of channels. Each Voice Grade channel provides voice frequency transmission capability in the nominal frequency range of 300 to 3000 Hz and may be terminated two-wire or four-wire. When a single Voice Grade channel is ordered to be terminated at a customer's premises where the premises is all-digital and requires a minimum digital interface level of 1.544 Mbps, the Company will provide the required interface where facilities are available.

Technical Specifications for Voice Grade may be found in Technical Reference ***Publication TR-NWT-000335***. (C)

(b) DS1 Entrance Facility

DS1 Entrance Facility provides twenty-four (24) channels for the transmission of nominal 56 kbps or 1.544 Mbps isochronous serial data. The actual bit rate and framing format is a function of the channel interface selected by the customer.

Technical Specifications for DS1 may be found in Technical Reference ***Publication GR-342***. (C)

6. Switched Access Service (Cont'd)

6.1 General (Cont'd)

6.1.3 Rate Categories (Cont'd)

(B) Switched Transport (Cont'd)

(1) Entrance Facility (Cont'd)

(c) DS3 Entrance Facility

DS3 Entrance Facility provides twenty-eight (28) DS1s or six hundred and seventy-two (672) channels for the transmission of nominal 44.736 Mbps isochronous serial data.

With DS3, an electrical interface will be installed at the customer's premises, which provides an electrical signal with a transmission speed of 44.736 Mbps per channel.

DS3 Entrance Facility rates may vary based on distance, as set forth in 6.8.2(A)(3) following.

Technical Specifications for DS3 may be found in Technical Reference Publication GR-342.

(M)

(M)

(M) Material previously appearing on this page now appears on Page 173.3.

6. Switched Access Service (Cont'd)

6.1 General (Cont'd)

6.1.3 Rate Categories (Cont'd)

(B) Switched Transport (Cont'd)

(1) Entrance Facility (Cont'd)

(d) STS1 Entrance Facility

Synchronous Transport Signal Level 1 (STS1) channels provide for the SONET transmission of 51.84 Mbps of data. The signal consists of overhead and a Synchronous Payload Envelope (SPE). The overhead portion of the signal is used for controlling, framing and maintaining the signal. The SPE contains the customer information.

STS1 is provisioned over the Telephone Company's SONET network and may be configured as a stand alone two-point service or connected to an OC level SONET service (e.g., switched OptiPoint Service) or hubbed to an STS1/DS1 Multiplexer.

Customers ordering STS1 service must specify the interface requested (i.e., STS1 interface or DS3 interface) and how the signal is to be formatted (i.e., STS1, STS1 with VT1.5 mapping, or STS1 with DS3 mapping). An STS1 with VT1.5 mapping can be multiplexed to 28 DS1s using the STS1/DS1 Multiplexing optional feature set forth in 6.1.3(B)(5)(d) following. Virtual Tributary (VT) mapping is a SONET structure designed for the transport of sub-STS1 payloads. A DS1 is mapped into the SONET format using a VT1.5 as a packaging mechanism that is internal to the SONET signal.

6. Switched Access Service (Cont'd)

6.1 General (Cont'd)

6.1.3 Rate Categories (Cont'd)

(B) Switched Transport (Cont'd)

(1) Entrance Facility (Cont'd)

(d) STS1 Entrance Facility (Cont'd)

Current SONET standards do not provide for asynchronous DS3 to DS1 multiplexing. An STS1 may be mapped for either one DS3 or 28 DS1s. However, individual DS1s within a DS3 are not accessible within the SONET architecture, and their performance cannot be guaranteed for this reason. When the customer requests that an STS1 be mapped as a DS3 multiplexed to the DS1 level, a DS3 to DS1 multiplexing arrangement, as set forth in 6.1.3(B)(5)(d) following will be required.

STS1 Entrance Facility rates may vary based on distance. The mileage used to determine the monthly rate for entrance facilities located outside a Telephone Company Central Office is the airline distance between the customer's designated premises and the Telephone Company serving wire center. The mileage measurement is determined by utilizing exchange maps and mileage tables located in designated Telephone Company offices for such purposes.

STS1 service is provided where SONET facilities are available with sufficient bandwidth capacity to meet the customer's request.

6. Switched Access Service (Cont'd)

6.1 General (Cont'd)

6.1.3 Rate Categories (Cont'd)

(B) Switched Transport (Cont'd)

(1) Entrance Facility (Cont'd)

(***e***) OptiPoint Entrance Facilities (T) (M)

OptiPoint entrance facilities provide point-to-point high-speed synchronous optical fiber-based full duplex data transmission capabilities. A detailed service description for OptiPoint Services is set forth in 6.2.9 following.

(2) Direct-Trunked Transport

Direct-Trunked Transport provides the communication path between the serving wire center of a customer's premises and an end office. Direct-Trunked Transport is dedicated to the use of a single customer and does not require switching at an access tandem. Direct-Trunked Transport is available for use with all line side and trunk side Switched Access Services. (M)

(M) Material now appearing on this page previously appeared on Page 173.

6. Switched Access Service (Cont'd)

6.1 General (Cont'd)

6.1.3 Rate Categories (Cont'd)

(B) Switched Transport (Cont'd)

(2) Direct-Trunked Transport (Cont'd)

Direct-Trunked Transport is not available to end offices that lack recording and measuring capabilities needed to provide Direct-Trunked Transport. Direct-Trunked Transport is also not available for TFC Access Service when the required SSP function is located at the access tandem.

Direct-Trunked Transport provides for the transmission facilities between the Company's serving wire center and an end office when such facilities are not switched through an access tandem. This includes the transmission medium itself as well as certain circuit equipment that is used at the ends of the interoffice links and employed to provision the channels on the transmission medium and circuit equipment used within the network to manage the circuits at intermediate locations.

The Company applies a 50% billing percentage to the Direct-Trunked Transport Termination (fixed) rate on jointly-owned circuits, and applies 100% on wholly-owned circuits. When the Direct-Trunked Transport Facility is zero (0) (i.e., collocated serving wire centers), neither the Direct-Trunked Transport Facility (per mile) rate nor the Direct-Trunked Termination (fixed) rate will apply.

Direct-Trunked Transport also provides for the transmission facilities between the Company's serving wire center and a Hub that interconnects facilities for both Tandem-Switched Transmission and Direct-Trunked Transport.

6. Switched Access Service (Cont'd)

6.1 General (Cont'd)

6.1.3 Rate Categories (Cont'd)

(B) Switched Transport (Cont'd)

(3) Tandem-Switched Transport

Tandem-Switched Transport provides the communication path between the serving wire center of a customer's premises and an end office, and includes tandem switching functions. Tandem-Switched Transport also includes circuits dedicated to the use of a single customer (from the serving wire center to the access tandem) and circuits provided for the common use of all customers who have requested tandem switching (from the access tandem to the end office). Tandem-Switched Transport is available for use with all trunk side Switched Access Services. Tandem-Switched Transport is not available for use with line side Switched Access Services.

Tandem-Switched Transport provides for the transmission facilities between the Company's serving wire center and an end office that is switched through a tandem. Tandem-Switched Transport is composed of two (2) sub-elements:

(a) Tandem-Switched Transmission, which provides for the transmission facilities from the Company's serving wire center to an access tandem switch and from the Company's access tandem switch to an end office. This includes the transmission medium itself, as well as certain circuit equipment that is used at the ends of the interoffice links and employed to derive the channels on the transmission medium, and circuit equipment used within the network to manage the circuits at intermediate locations.

The Company applies a 50% billing percentage to the Tandem-Switched Transport Termination (fixed) rate on jointly owned circuits, and applies 100% on wholly-owned circuits. When the Tandem-Switched Transport Facility is zero (0) (i.e., collocated serving wire centers), neither the Tandem-Switched Transport Facility (per mile) rate nor the Tandem-Switched Transport Termination (fixed) rate will apply.

6. Switched Access Service (Cont'd)

6.1 General (Cont'd)

6.1.3 Rate Categories (Cont'd)

(B) Switched Transport (Cont'd)

(3) Tandem-Switched Transport (Cont'd)

(b) Tandem Switching, which provides for use of the Company's access tandem.

Switched Transport is provided at the rates and charges as set forth in 6.8.2 following. The application of these rates with respect to individual Switched Access Service arrangements is set forth in 6.7.1(D) following.

The number of Switched Transport transmission paths and terminations provided is based on the customer's order and is determined by the Company as set forth in 6.5.5 following.

6. Switched Access Service (Cont'd)

6.1 General (Cont'd)

6.1.3 Rate Categories (Cont'd)

6. Switched Access Service (Cont'd)

6.1 General (Cont'd)

6.1.3 Rate Categories (Cont'd)

6. Switched Access Service (Cont'd)

6.1 General (Cont'd)

6.1.3 Rate Categories (Cont'd)

6. Switched Access Service (Cont'd)

6.1 General (Cont'd)

6.1.3 Rate Categories (Cont'd)

6. Switched Access Service (Cont'd)

6.1 General (Cont'd)

6.1.3 Rate Categories (Cont'd)

6. Switched Access Service (Cont'd)

6.1 General (Cont'd)

6.1.3 Rate Categories (Cont'd)

6. Switched Access Service (Cont'd)

6.1 General (Cont'd)

6.1.3 Rate Categories (Cont'd)

(B) Switched Transport (Cont'd)

(4) Non-chargeable Option Features

Where transmission facilities permit, the Company will, at the option of the customer, provide the following optional features in association with the Interface Groups listed in 6.4.3(A) through (F) following. Only those Interface Groups referenced with each optional feature will be provided with that feature.

(a) Supervisory Signaling

Where the transmission parameters permit, and where signaling conversion is required by the customer to meet its signaling capability, the customer may order an optional supervisory signaling arrangement for each transmission path provided as follows:

6. Switched Access Service (Cont'd)

6.1 General (Cont'd)

6.1.3 Rate Categories (Cont'd)

(B) Switched Transport (Cont'd)

(4) Nonchargeable Optional Features (Cont'd)

(a) Supervisory Signaling (Cont'd)

- For Interface Groups 1 and 2

  DX Supervisory Signaling,
  E&M Type I Supervisory Signaling,
  E&M Type II Supervisory Signaling, or
  E&M Type III Supervisory Signaling

- For Interface Group 2

  SF Supervisory Signaling, or
  Tandem Supervisory Signaling

- For Interface Groups 6 through 9

  These Interface Groups may, at the option of the customer, be provided with individual transmission path SF supervisory signaling where such signaling is available in Company central offices. Generally such signaling is available only where the entry switch provides an analog, i.e., nondigital, interface to the Transport Termination and a portion of the facility between the analog entry switch and the customer's premises is analog. These supervisory signaling arrangements are not available in combination with the SS7 Signaling feature described in 6.3(CC) following.

(b) Improved Return Loss

This feature provides Improved Return Loss, expressed as Echo Return Loss (ERL) and Singing Return Loss (SRL), on two-wire ports of a four-wire Point of Termination. The specific parameters guaranteed are set forth in 6.4.1 following. This feature is available with all Feature Groups.

6. Switched Access Service (Cont'd)

6.1 General (Cont'd)

6.1.3 Rate Categories (Cont'd)

(B) Switched Transport (Cont'd)

(4) Nonchargeable Optional Features (Cont'd) (N)

(c) Data Transmission Parameters

Where transmission facilities permit, the Customer may order Data Transmission Parameters for each transmission path in association with Interface groups 1, 2, 6 and 9. This feature includes the provision of trouble testing by the Telephone Company, either independently or cooperatively with the Customer, of parameters normally associated with data transmission. The Telephone Company will, upon receipt of a trouble report from the Customer, conduct tests either independently or cooperatively with the Customer as appropriate, and take any necessary action to ensure that the parameters set forth in Section 6.4.2(A) or 6.4.2(B) are met. In those cases where the Customer specifically requests that Telephone Company personnel conduct tests, Maintenance of Service charges will be imposed where applicable in accordance with Section 13.3.1. (N)

(5) Chargeable Optional Features

(a) Provision of Other Than Company Selected Traffic Routing

This option allows the customer to specify a particular traffic routing for trunk groups in lieu of Company selected routing, i.e., the customer may specify that the routing be on a direct trunk basis or via an access tandem. It is available with Feature Groups B, C, D, and Interim 500, TFC and 900 Access Service.

(b) Customer Specification of Feature Group Directionality

This option allows the customer to specify that the operation of a trunk group will be one-way originating or terminating calling in lieu of Company selected two-way calling or, alternatively, that operation will be two-way calling in lieu of Company selected one-way calling. It is available with Feature Groups B, C and D.

6. Switched Access Service (Cont'd)

6.1 General (Cont'd)

6.1.3 Rate Categories (Cont'd)

(B) Switched Transport (Cont'd)

(5) Chargeable Optional Features (Cont'd)

(c) Customer Specification of Switched Transport Termination

This option allows the customer to specify, for Feature Group B routed directly to an end office or access tandem, a four-wire termination of the Switched Transport at the entry switch in lieu of Company selected two-wire termination. This option is available only when the Feature B arrangement is provided with Type B Transmission Specifications.

(d) Multiplexing

Multiplexing provides for arrangements to convert a single higher capacity or bandwidth circuit for bulk transport to several lower capacity or bandwidth circuits. Multiplexing is only available at Company designated Hubs arranged for Multiplexing. All types of Multiplexing may not be available at each Hub location.

Listed below are the Multiplexing arrangements offered with Switched Access.

- DS1 to Voice

An arrangement that Multiplexes twenty-four(24) Voice Grade circuits to a single DS1 Digital circuit at a rate of 1.544 Mbps, or Multiplexes a single DS1 Digital circuit at a rate of 1.544 Mbps to twenty-four (24) Voice Grade circuits.

6. Switched Access Service (Cont'd)

6.1 General (Cont'd)

6.1.3 Rate Categories (Cont'd)

(B) Switched Transport (Cont'd)

(5) Chargeable Optional Features (Cont'd)

(d) Multiplexing (Cont'd)

- DS3 to DS1

An arrangement that Multiplexes twenty-eight (28) DS1 Digital circuits to a single DS3 Digital circuit at a rate of 44.736 Mbps, or Multiplexes a single DS3 Digital circuit at a rate of 44.736 Mbps to twenty-eight (28) DS1 Digital circuits.

- ***STS1/DS1 Multiplexing*** (N)

An arrangement that provides transport of sub-STS1 payloads by converting an STS1 with VT1.5 mapping to 28 DS1s. The STS1/DS1 Multiplexing feature is available at Telephone Company provided fiber optic terminals equipped with VT1.5 configuration cards. (N)

The options described in (a), (b) and (c) preceding are rated on an individual case basis with both nonrecurring charges and monthly recurring rates applying. The rates and charges applicable for the Multiplexing options described in (d) preceding are set forth in 6.8.2(F) following.

6. Switched Access Service (Cont'd)

6.1 General (Cont'd)

6.1.3 Rate Categories (Cont'd)

(B) Switched Transport (Cont'd)

(6) Common Channel Signaling/Signaling System 7 (CCS/SS7) Interconnection Service

(a) General

Common Channel Signaling/Signaling System 7 (CCS/SS7) Interconnection Service, which is available to customers for their use in furnishing their services to end users, provides a signaling path between a customer designated premises and a Company Interconnecting Signaling Transfer Point (STP). CCS/SS7 Interconnection Service, through the use of this two-way signaling path, provides customer interconnection with the Company's CCS/SS7 network allowing the customer to obtain data relevant to the completion of the originating end user's call. CCS/SS7 Interconnection Service provides connection to the Company interconnecting STPs only. CCS/SS7 Interconnection Service will be utilized in conjunction with the following Company provided services requiring CCS/SS7 connectivity: Line Information Data Base (LIDB) Access Service and SS7 Signaling.

Rate application for CCS/SS7 Interconnection Service is described in 6.7.1 following. Rates and charges for CCS/SS7 Interconnection Service are contained in Section 6.8.2 of the Embarq Local Operating Companies Tariff (T)
F.C.C. No. 1. (T)

6. Switched Access Service (Cont'd)

6.1 General (Cont'd)

6.1.3 Rate Categories (Cont'd)

(B) Switched Transport (Cont'd)

(6) Common Channel Signaling/Signaling System 7 (CCS/SS7) Interconnection Service (Cont'd)

(a) General (Cont'd)

(1) Manner of Provisioning

The link facilities for CCS/SS7 Interconnection Service will consist of a 56.0 kbps circuit or an optional DS1 (1.544 Mbps) channel at the customer designated premises Multiplexed at a Company designated Hub to a 56.0 kbps circuit for interconnection at the Company STP port which is located in Johnson City, Tennessee and Bristol, Tennessee.

CCS/SS7 Interconnection Service provided over 56.0 kbps channels or DS1 (1.544 Mbps) facilities will conform with the technical specifications set forth in Technical Reference ***Publication GR-905***. The compatible channel (C)
interfaces for CCS/SS7 Interconnection Service
are set forth in ***Section*** 7.3.5(H) following for (T)
56.0 kpbs channels and in ***Section*** 7.3.5(I) (T)
following for DS1 facilities.

In order to ensure network availability and reliability, the Company's CCS/SS7 Interconnection Service is supported by a pair of interconnecting STPs as outlined in
Technical Reference ***Publication GR-905***. The (C)
Company shall not be liable for service outages if the customer employs technology related to the interconnection of signaling networks that does not adhere to generally accepted industry technical standards.

6. Switched Access Service (Cont'd)

6.1 General (Cont'd)

6.1.3 Rate Categories (Cont'd)

(B) Switched Transport (Cont'd)

(6) Common Channel Signaling/Signaling System 7 (CCS/SS7) Interconnection Service (Cont'd)

(a) General (Cont'd)

(1) Manner of Provisioning (Cont'd)

When CCS/SS7 Interconnection Service is provisioned for use with LIDB Access Service, interconnection must occur through physically diverse facilities to both interconnecting STPs in Johnson City, Tennessee and Bristol, Tennessee. Such provisioning allows for the diversity of link facilities required by the Company and serves as a protective measure should interconnecting STP or CCS/SS7 Interconnection Service failure occur.

An Originating Point Code (OPC) Charge applies for each OPC established, as well as each OPC added or changed subsequent to the establishment of STP Access. The OPC Charge applies on a per service basis. A Global Title Address (GTA) Translation Charge applies for each service or application (excluding LIDB Access Service and TFC Data Base Service) that utilizes Transaction Capabilities Application Part (TCAP) messages. A GTA Translation Charge also applies for each service (excluding LIDB Access Service and TFC Data Base Service) added or changed subsequent to the initial establishment of STP Access.

Charges for Originating Point Codes and Global Title Address Translations are contained in Section 6.8.2 of the Embarq Local Operating Companies Tariff F.C.C. No. 1. (T) (T)

6. Switched Access Service (Cont'd)

6.1 General (Cont'd)

6.1.3 Rate Categories (Cont'd)

(B) Switched Transport (Cont'd)

(6) Common Channel Signaling/Signaling System 7 (CCS/SS7) Interconnection Service (Cont'd)

(a) General (Cont'd)

(1) Manner of Provisioning (Cont'd)

When CCS/SS7 Interconnection Service is provisioned for use with SS7 Signaling, interconnection between signaling networks must occur at the STP pairs for the corresponding jurisdiction as shown below:

Mated STP Pair Location	Jurisdictions Served
Bristol and Johnson City, Tennessee	South Carolina

6. Switched Access Service (Cont'd)

6.1 General (Cont'd)

6.1.3 Rate Categories (Cont'd)

(C) Local Switching

The Local Switching rate element provides for the use of end office switching equipment for the termination of end user lines in the local end office, and for the termination of a call at a Company operator or recording. End user lines may be provided as either Common Lines or Special Access ***Channel*** (T)
Terminations utilized for connection with Switched Access Service at Company designated WATS Serving Offices. Common Lines are discussed in 3. preceding, while Special Access ***Channel*** Terminations are discussed in 7. (T)
following. There are various types of originating and terminating line side terminations depending on the type of signaling used (i.e., loop start or ground start). Line side terminations are available with either dial pulse or dual tone multi-frequency address signaling.

The intercept function informs a caller why a call, as dialed, could not be completed, and if possible, provides the caller with information required to complete the call.

The Premium Charge is divided into two (2) distinct categories, i.e., LS1 and LS2. The first category, LS1, provides local dial switching for Feature Groups A and B when the traffic originates from or terminates at an equal access end office. There is a transitional rate which applies to FGA and FGB traffic which originates from or terminates at a non equal access end office. The second category, LS2, provides local dial switching for Feature Groups C and D.

Where end offices are appropriately equipped, international dialing may be provided as a capability associated with LS2. International dialing provides the capability of switching international calls with service prefix and address codes having more digits than are capable of being switched through a standard FGC or FGD equipped end office.

Rates for LS1 and LS2 are set forth in 6.8.3(A) following. The application of these rates with respect to individual Feature Groups is as set forth in 6.7.1(D) following.

Included as part of Common Switching are various optional features which the customer can order to meet its specific communications requirements. These optional features are described in 6.3.1 following.

6. Switched Access Service (Cont'd)

6.1 General (Cont'd)

6.1.3 Rate Categories (Cont'd)

(D) Toll Free Code (TFC) Access Service

The TFC Access Service Data Base Query Charge, as set forth in 6.8.4(A) following, will apply for each 800 call query received at the Company's TFC data base. Per Query Charges will be accumulated over a monthly period and billed to the customer on a monthly basis.

Included as a part of TFC Access Service are various optional service features, described in 6.2.5(C) following, which the customer may specify to meet its specific requirements. The rates for the TFC Data Base Optional Service Features are set forth in 6.8.4(B) following and will apply on a per query basis. When a combination of one (1) or more optional service features is specified, only one (1) such charge shall apply. Per Query Service Optional Charges will be accumulated over a monthly period and billed to the customer on a monthly basis.

(E) ***Reserved For Future Use*** (C)

(D)

(D)

6. Switched Access Service (Cont'd)

6.1 General (Cont'd)

6.1.3 Rate Categories (Cont'd)

(F) 900 Access Service Nonrecurring Charges

The 900 Access Service nonrecurring charge is assessed depending upon how the service is ordered:

(1) If the service is ordered for the state or LATA, the customer charge for the assembly of route tables is assessed for each end office/tandem the Company serves in the state or LATA. A second nonrecurring charge element applies per NXX activated or deactivated, times the number of Company access tandems or end offices modified to perform six (6) digit screening for 900 Access Service.

(2) The second alternative allows for the service to be ordered to only one (1) access tandem or end office performing six (6) digit screening. The customer charge for the assembly of route tables is assessed for each end office subtending the access tandem (including a collocated end office, if applicable). A second nonrecurring charge element applies per NXX activated or deactivated, times the designated Company access tandem(s) or end office(s) modified to perform six (6) digit screening for 900 Access Service. This option can be applied repetitively to different tandems to customize the intended offering area.

The Route Pattern Nonrecurring Charge applies only once, on the customer's initial request to the Company for 900 Access Service in each LATA or state. If the customer places an order using option (2) above, the Route Pattern Nonrecurring Charge applies to each end office specified in the order received.

6. Switched Access Service (Cont'd)

6.1 General (Cont'd)

6.1.3 Rate Categories (Cont'd)

(G) Interim 500 Access Service Nonrecurring Charges

The Interim 500 Access Service nonrecurring charge is assessed depending upon how the service is ordered:

(1) If the service is ordered for the state or LATA, the customer charge for the assembly of route tables is assessed for each end office/tandem the Company serves in the state or LATA. A second nonrecurring charge element applies per NXX activated or deactivated, times the number of Company access tandems or end offices modified to perform six (6) digit screening for Interim 500 Access Service.

(2) The second alternative allows for the service to be ordered to only one (1) access tandem or end office performing six (6) digit screening. The customer charge for the assembly of route tables is assessed for each end office subtending the access tandem (including a collocated end office, if applicable). A second nonrecurring charge element applies per NXX activated or deactivated, times the designated Company access tandem(s) or end office(s) modified to perform six (6) digit screening for Interim 500 Access Service. This option can be applied repetitively to different tandems to customize the intended offering area.

The Route Pattern Nonrecurring Charge applies only once, on the customer's initial request to the Company for Interim 500 Access Service in each LATA or state. If the customer places an order using option (2) above, the Route Pattern Nonrecurring Charge applies to each end office specified in the order received.

6. Switched Access Service (Cont'd)

6.1 General (Cont'd)

6.1.4 Special Facilities Routing

A customer may request that the facilities used to provide Switched Access Service be specially routed. The regulations, rates and charges for Special Facilities Routing (i.e., Avoidance, Diversity and Cable-Only) are as set forth in ***Section*** 11 following (T)

6.1.5 Design Layout Report

At the request of the customer, the Company will provide to the customer the makeup of the Company facilities and services provided from the customer's premises to the first point of switching. This information will be provided in the form of a Design Layout Report. The Design Layout Report will be provided to the customer at no charge, and will be reissued or updated whenever these facilities are materially changed.

6.1.6 Testing

(A) Acceptance Testing

At the customer's request, the Company will cooperatively test certain parameters at the time of installation. For line side and trunk side Feature Groups and for Voice Grade Switched Transport facilities, the Company will test the following parameters: loss, c-notched noise, c-message noise, 3-tone slope, d.c. continuity and operational signaling. For DS1 and DS3 Switched Transport facilities, acceptance tests will include tests for the parameters applicable to the service as specified in Technical Reference ***Publication GR-342***. When Switched Transport is (C)
provided with Interface Groups 2***, 6 and*** 9, and the Transport (T)
Termination is two-wire (i.e., there is a four-wire to two-wire conversion in Switched Transport), balance parameters (equal level echo path loss) may also be tested. The customer will not be charged for these tests.

Activation of 500 or 900 NXX codes will be tested by the Company by placing a test call from each end office where six (6) digit screening is performed. In locations where six (6) digit screening is performed at an access tandem with multiple subtending end offices, a minimum of one (1) subtending end office will be tested by the Company. No charge will be made for these tests.

6. Switched Access Service (Cont'd)

6.1 General (Cont'd)

6.1.6 Testing (Cont'd)

(B) In-Service Testing

At the customer's request, the Company will provide In-Service Testing of Switched Access Services after the time of installation. The customer will not be charged for these tests. These In-Service Tests will be provided on an automatic basis (i.e., no Company or customer technicians involved) or on a cooperative basis (i.e., Company technician(s) involved at the Company end office and customer technician(s) involved at the customer's premises). The parameters to be tested include: 1004 Hz loss, c-message noise and balance (return loss).

In the case of Automatic Testing, the customer shall provide remote office test lines and 105 type test lines with associated responders or their functional equivalent. When Automatic Testing is not available in a Company end office, Cooperative Testing will be substituted.

The 1004 Hz loss and c-message noise tests will be provided on a quarterly basis, while the balance test will be provided on an annual basis.

Additional tests, for which charges do apply, are described in 13.3.5(A) ***following. Charges*** for these additional tests are set forth in ***13.3.5(C)(1).*** (T)

6. Switched Access Service (Cont'd)

6.1 General (Cont'd)

6.1.7 Ordering Options and Conditions

Switched Access Service is ordered under the Access Order provisions set forth in 5. preceding. Also, included in that Section are other charges which may be associated with ordering Switched Access Service (e.g., Service Date Change Charges, Cancellation Charges, etc.).

6.2 Provision and Description of Switched Access Service Arrangements

Switched Access Service is provided in four (4) different Feature Group arrangements and as Interim 500, TFC and 900 Access Service. The provision of each service type requires Switched Transport facilities and the appropriate Local Switching functions. In addition, Special Access Service may, at the option of the customer, be connected with Switched Access Service at Company designated WATS Serving Offices.

There are three (3) specific transmission specifications (i.e., Types A, B and C) that have been identified for the provision of Switched Access Service. The specifications provided are dependent on the Interface Group and the routing of the service, i.e., whether the service is routed directly to the end office or via an access tandem. The parameters for the transmission specifications are set forth in 6.4.1 following.

Feature Groups are arranged for either originating, terminating or two-way calling, based on the customer end office switching capacity ordered, while Interim 500 Access Service, TFC Access Service and 900 Access Service are arranged for originating calling only. Originating calling permits the delivery of calls from Telephone Exchange Service locations to the customer's premises.

6. Switched Access Service (Cont'd)

6.2 Provision and Description of Switched Access Service Arrangements (Cont'd)

Terminating calling permits the delivery of calls from the customer's premises to Telephone Exchange Service locations. Two-way calling permits the delivery of calls in both directions, but not simultaneously. The Company will determine the type of calling to be provided unless the customer requests that a different type of directional calling is to be provided. In such cases, the Company will work cooperatively with the customer to determine the directionality.

There are various chargeable and nonchargeable optional features available with Switched Access Service. These additional optional features are provided as Switched Transport and Local Switching options.

Following are detailed descriptions of each of the available Switched Access Services. Each Service is described in terms of its specific physical characteristics and calling capabilities, the transmission specifications with which it is provided, optional features available for use with it and the standard testing capabilities.

The Local Switching optional features, which are described in 6.3 following, unless specifically stated otherwise, are available at all suitably equipped Company end office switches.

6.2.1 Feature Group A (FGA)

(A) Description

(1) FGA is provided in connection with Company electronic end offices. At the option of the customer, FGA is provided on a single or multiple line group basis and is arranged for originating calling only, terminating calling only or two-way calling. (D)

(D)

6. Switched Access Service (Cont'd)

6.2 Provision and Description of Switched Access Service Arrangements (Cont'd)

6.2.1 Feature Group A (FGA) (Cont'd)

(A) Description (Cont'd)

(2) FGA provides a line side termination at the first point of switching. The line side termination will be provided with either ground start supervisory signaling or loop start supervisory signaling. The type of signaling is at the option of the customer.

(3) The Company shall select the first point of switching, within the selected LATA, at which the line side termination is to be provided unless the customer requests a different first point of switching and Company facilities and measurement capabilities, where necessary, are available to accommodate such a request.

(4) A seven-digit local telephone number assigned by the Company is provided for access to FGA switching in the originating direction. The seven-digit local telephone number will be associated with the selected end office switch and is of the form NXX-XXXX.

If the customer requests a specific seven-digit telephone number that is not currently assigned, and the Company can, with reasonable effort, comply with that request, the requested number will be assigned to the customer.

6. Switched Access Service (Cont'd)

6.2 Provision and Description of Switched Access Service Arrangements (Cont'd)

6.2.1 Feature Group A (FGA) (Cont'd)

(A) Description (Cont'd)

(5) FGA switching, when used in the terminating direction, is arranged with dial tone start-dial signaling. When used in the terminating direction FGA switching may, at the option of the customer, be arranged for dial pulse or dual tone multifrequency address signaling, subject to availability of equipment at the first point of switching. When FGA switching is provided in a hunt group or uniform call distribution arrangement, all FGA switching will be arranged for the same type of address signaling.

(6) No address signaling is provided by the Company when FGA Switching is used in the originating direction. Address signaling in such cases, if required by the customer must be provided by the customer's end user using inband tone signaling techniques. Such inband tone address signals will not be regenerated by the Company and will be subject to the ordinary transmission capabilities of the ***Switched*** Transport provided.

(7) ***FGA switching***, when used in the terminating direction, may be used to access valid NXXs in the local calling area of the dial tone office, FGA switching in providing MTS/WATS-like Service, when used in the terminating direction, may be used to access valid NXXs in the LATA, local operator assistance (0- and 0+), Directory Assistance (411 where available and 555-1212), emergency reporting service (911 where available), exchange telephone repair (611 where available), time or weather announcement services of the Company, community information services of an information service provider and other customers' services (by dialing the appropriate digits). Charges for FGA terminating calls requiring operator assistance or calls to 611 or 911 will only apply where sufficient call details are available. (C)

6. Switched Access Service (Cont'd)

6.2 Provision and Description of Switched Access Service Arrangements (Cont'd)

6.2.1 Feature Group A (FGA) (Cont'd)

(A) Description (Cont'd)

(7) (Cont'd)

Additional Non-Access Charges will also be billed on a separate account for (a) an Operator Surcharge, as set forth in the Company's General Subscriber Services Tariff, for local operator assistance (0- and 0+) calls; (b) calls to certain community information services, for which rates are applicable under the Company's General Subscriber Services Tariff, e.g., 976 (DIAL-IT) Network Services and, (c) calls from a FGA line to another customer's service in accordance with that customer's applicable service rates when the Company performs the billing function for that customer, including interLATA toll (1+) calls. For calls to Directory Assistance (411 where available and 555-1212), Switched Transport rates for FGA Switched Access Service will apply.

(8) When a FGA switching arrangement for an individual customer (a single line or entire hunt group) is discontinued at an end office, an intercept announcement is provided. This arrangement provides, for a period of ninety (90) days, an announcement that the service associated with the number dialed has been disconnected.

6. Switched Access Service (Cont'd)

6.2 Provision and Description of Switched Access Service Arrangements (Cont'd)

6.2.1 Feature Group A (FGA) (Cont'd)

(B) Optional Features (where equipment is available)

(1) Local Switching Optional Features

(a) Hunt Group Arrangement
(b) Uniform Call Distribution Arrangement
(c) Nonhunting Number for Use with Hunt Group Arrangement or Uniform Call Distribution Arrangement
(d) Call Denial
(e) Service Code Denial
(f) InterLATA Call Denial
(g) Hunt Group Arrangement for Use with Special Access Service Utilized for Connection with Switched Access Service
(h) Uniform Call Distribution Arrangement for Use with Special Access Service Utilized for Connection with Switched Access Service
(i) Nonhunting Number for Use with Hunt Group Arrangement or Uniform Call Distribution Arrangement for Use with Special Access Service Utilized for Connection with Switched Access Service
(j) Band Advance Arrangement for Use with Special Access Service Utilized for Connection with Switched Access Service
(k) Two-way operation with dial pulse address signaling and loop start supervisory signaling
(l) Two-way operation with dial pulse address signaling and ground start supervisory signaling
(m) Two-way operation with dual tone multifrequency address signaling and loop start supervisory signaling
(n) Two-way operation with dual tone multifrequency address signaling and ground start supervisory signaling
(o) Terminating operation with dial pulse address signaling and loop start supervisory signaling
(p) Terminating operation with dial pulse address signaling and ground start supervisory signaling
(q) Terminating operation with dual tone multifrequency address signaling and loop start supervisory signaling

6. Switched Access Service (Cont'd)

6.2 Provision and Description of Switched Access Service Arrangements (Cont'd)

6.2.1 Feature Group A (FGA) (Cont'd)

(B) Optional Features (where equipment is available) (Cont'd)

(1) Local Switching Optional Features (Cont'd)

(r) Terminating Operation with Dual Tone Multifrequency AddressSignaling and Ground Start Supervisory Signaling
(s) Originating Operation with Loop Start Supervisory Signaling
(t) Originating Operation with Ground Start Supervisory Signaling
(u) Call Restriction
(v) Call Screening

(2) Switched Transport Optional Features

(a) Supervisory Signaling (D)
(b) Improved Return Loss
(c) Data Transmission Parameters (N)

(3) Certain other features which may be available in connection with Feature Group A are provided under the Company's General Subscriber Services Tariff. These are:

(a) Customer Calling Features
(b) Bill Number Screening
(c) IntraLATA Extensions

6. Switched Access Service (Cont'd)

6.2 Provision and Description of Switched Access Service Arrangements (Cont'd)

6.2.1 Feature Group A (FGA) (Cont'd)

(C) Transmission Performance

FGA is provided with either Type B or Type C Transmission Specifications. The specifications for the associated parameters are guaranteed to the first point of switching. Type C Transmission Specifications are provided with Interface Group 1 and Type B is provided is provided with Interface Groups 2***, 6, and*** 9. Type DB Data Transmission Parameters are provided with FGA to the first point of switching. (C)

(D) Testing Capabilities

FGA is provided, in the terminating direction where equipment is available, with seven (7) digit access to balance (100 type) test line and milliwatt (102 type) test line. In addition to the Acceptance Tests described in 6.1.6 preceding, which are included with the installation of service, Additional Tests are available for FGA as set forth in ***Section*** 13.3.5 following. (T)

6.2.2 Feature Group B (FGB)

(A) Description

(1) FGB, when directly routed to an end office (i.e., provided without the use of an access tandem switch), is provided at appropriately equipped Company electronic end office switches. When provided via Company designated electronic access tandem switches, FGB switching is provided at Company ***electronic end*** office switches. (C)

6. Switched Access Service (Cont'd)

6.2 Provision and Description of Switched Access Service Arrangements (Cont'd)

6.2.2 Feature Group B (FGB) (Cont'd)

(A) Description (Cont'd)

(2) FGB is provided as trunk side switching through the use of end office or access tandem switch trunk equipment. The switch trunk equipment is provided with wink start start-pulsing signals and answer and disconnect supervisory signaling.

(3) FGB switching is provided with multifrequency address signaling in both the originating and terminating directions. Except for FGB switching provided with the Automatic Number Identification (ANI) or rotary dial station signaling arrangements as set forth in 6.3 following, any other address signaling in the originating direction, if required by the customer, must be provided by the customer's end user using inband tone signaling techniques. Such inband tone address signals will not be regenerated by the Company and will be subject to the ordinary transmission capabilities of the Switched Transport provided.

(4) The access code for FGB switching is an uniform access code. The form of the uniform access code is 950-XXXX for Carriers.

This uniform access code is the assigned access number of all FGB Switched Access Service provided to the customer by the Company.

6. Switched Access Service (Cont'd)

6.2 Provision and Description of Switched Access Service Arrangements (Cont'd)

6.2.2 Feature Group B (FGB) (Cont'd)

(A) Description (Cont'd)

(5) FGB switching, when used in the terminating direction and routed through an access tandem, may be used to access only valid NXX codes served by end offices subtending the access tandem, time or weather announcement services of the Company, community information services of an information service provider, and other customers' services (by dialing the appropriate digits). When used in the terminating direction and directly routed to an end office, FGB switching may be used to access only those valid NXX codes served by that end office, time or weather announcement services of the Company, community information services of an information provider, and other customers' services (by dialing the appropriate digits). When a provider of MTS and WATS subscribes to both FGB and FGD at an equal access end office or to both FGB and FGC at any end office, all such FGB, FGC, and FGD usage originating and terminating at those end offices will be subject to the Premium Carrier Common Line, Switched Transport ***and*** Local Switching - ***LS2 rates*** as set forth in 3.9 (C)
preceding and ***6.8*** following, respectively. The customer will be billed (C)
additional non-access charges for calls to certain community information services, for which rates are applicable under the Company's General Subscriber Services Tariff, e.g., 976 (DIAL-IT) Network Services.

Additionally, non-access charges will also be billed for calls from a FGB trunk to another customer's service in accordance with that customer's applicable service rates when the Company performs the billing function for the customer. Calls in the terminating direction will not be completed to the 950- XXXX CAC, local operator assistance (0- and 0+), Directory Assistance (411 where available and 555-1212), service codes (611 and 911 where available) and the 101XXXX CAC. FGB may not be switched, in the terminating direction, to Switched Access Service Feature Groups B, C, and D, nor to Extended Area Service (EAS) end offices not subtending the FGB access tandem.

6. Switched Access Service (Cont'd)

6.2 Provision and Description of Switched Access Service Arrangements (Cont'd)

6.2.2 Feature Group B (FGB) (Cont'd)

(A) Description (Cont'd)

(6) The Company will establish a trunk group or groups for the customer at end office switches or access tandem switches where FGB switching is provided. When required by technical limitations, a separate trunk group will be established for each type of FGB switching arrangement provided. Different types of FGB or other switching arrangements may be combined in a single trunk group at the option of the Company.

(7) When all FGB switching arrangements are discontinued at an end office, an intercept announcement is provided. This arrangement provides, for a period of ninety (90) days, an announcement that the service associated with the number dialed has been disconnected.

(B) Optional Features (where equipment is available)

(1) Local Switching Optional Features

(a) Automatic Number Identification (ANI)
(b) Up to 7 Digit Outpulsing of Access Digits to Customer
(c) Alternate Traffic Routing
(d) Hunt Group Arrangement for Use with Special Access Service Utilized for Connection with Switched Access Service
(e) Uniform Call Distribution Arrangement for Use with Special Access Service Utilized for Connection with Switched Access Service
(f) Nonhunting Number for Use with Hunt Group Arrangement or Uniform Call Distribution Arrangement for Use with Special Access Service Utilized for Connection with Switched Access Service
(g) Band Advance Arrangement for Use with Special Access Service Utilized for Connection with Switched Access Service
(h) Rotary Dial Station Signaling
(i) Multifrequency Address Signaling

(2) Switched Transport Optional Features

(a) Provision of Other Than Company Selected Traffic Routing
(b) Customer Specification of Feature Group Directionality
(c) Customer Specification of Switched Transport Termination

6. Switched Access Service (Cont'd)

6.2 Provision and Description of Switched Access Service Arrangements (Cont'd)

6.2.2 Feature Group B (FGB) (Cont'd)

(B) Optional Features (where equipment is available) (Cont'd)

(2) Switched Transport Optional Features (Cont'd)

(d) Supervisory Signaling (T)
(e) Improved Return Loss |
(f) Data Transmission Parameters (T)

(3) Another feature, Bill Number Screening (BNS), which may be available in connection with FGB, is provided under the Company's General Subscriber Services Tariff.

(C) Transmission Performance

FGB is provided with either Type B or Type C Transmission Specifications. The specifications for the associated parameters are guaranteed to the end office when routed directly or to the first point of switching when routed via an access tandem. Type C Transmission Specifications are provided with Interface Group 1 and Type B is provided with Interface Groups 2, 6 and 9. Type DB Data Transmission Parameters are provided with FGB to the first point of switching.

Specifications for CCS7 Signaling connections are set forth in Technical ***Reference*** Publication ***GR-905*** and other related documentation. (C)

(D) Testing Capabilities

FGB is provided, in the terminating direction where equipment is available, with seven (7) digit access to balance (100 type) test line, milliwatt (102 type) test line, nonsynchronous or synchronous test line, automatic transmission measuring (105 type) test line, data transmission (107 type) test line, loop around test line, short circuit test line and open circuit test line. In addition to the Acceptance Tests described in 6.1.6 preceding, which are included with the installation of service, Additional Tests are available as set forth in Section 13.3.5 following.

6. Switched Access Service (Cont'd)

6.2 Provision and Description of Switched Access Service Arrangements (Cont'd)

6.2.3 Feature Group C (FGC)

(A) Description

(1) FGC is provided at all Company end office switches on a direct trunk basis or via Company designated access tandem switches. FGC switching is provided to the customer (i.e., providers of MTS and WATS) at an end office switch unless Feature Group D end office switching is provided in the same office. When FGD switching is available, FGC switching will not be provided.

(2) FGC is provided as trunk side switching through the use of end office or access tandem switch trunk equipment. The switch trunk equipment is provided with answer and disconnect supervisory signaling. Wink start start-pulsing signals are provided in all offices where available. In those offices where wink start start-pulsing signals are not available, delay dial start-pulsing signals will be provided, unless immediate dial pulse signaling is provided, in which case no start-pulsing signals are provided.

(3) FGC is provided with multifrequency address ***signaling***. ***Up*** to twelve (12) digits of the called party number dialed by the customer's end user using dual tone multifrequency or dial pulse address signals will be provided by Company equipment to the customer's premises where the Switched Access Service terminates. Such called party number signals will be subject to the ordinary transmission capabilities of the Switched Transport provided. (C)

6. Switched Access Service (Cont'd)

6.2 Provision and Description of Switched Access Service Arrangements (Cont'd)

6.2.3 Feature Group C (FGC) (Cont'd)

(A) Description (Cont'd)

(4) No access code is required for FGC switching. The telephone number dialed by the customer's end user shall be a seven (7) or ten (10) digit number for calls in the North American Numbering Plan (NANP). The form of the numbers dialed by the customer's end user is NXX-XXXX, 0 or 1 + NXX-XXXX, NPA + NXX-XXXX, 0 or 1 + NPA + NXX-XXXX.

(5) FGC switching, when used in the terminating direction, may be used to access valid NXXs in the local exchange, time or weather announcement services of the Company, community information services of an information provider, and other customers' services (by dialing the appropriate code) when the services can be reached using valid NXX codes. When directly routed to an end office, only those valid NXX codes served by that office may be accessed. When routed through an access tandem, only those valid NXX codes served by offices subtending the access tandem may be accessed. Where measurement capabilities exist, the customer will also be billed additional Non-Access Charges for calls to certain community information services, for which rates are applicable under the Company's General Subscriber Services Tariff, e.g., 976 (DIAL-IT) Network Services.

6. Switched Access Service (Cont'd)

6.2 Provision and Description of Switched Access Service Arrangements (Cont'd)

6.2.3 Feature Group C (FGC) (Cont'd)

(A) Description (Cont'd)

(5) (Cont'd)

Additionally, non-access charges will also be billed for calls from a FGC trunk to another customer's service in accordance with that customer's applicable service rates when the Company performs the billing function for that customer. Calls in the terminating direction will not be completed to 950-XXXX ***CACs***, local operator assistance (0- and 0+), (C)
Directory Assistance (411 and 555-1212), service codes (611 and 911),
and ***101XXXX CAC***. Calls will be completed to Directory Assistance (C)
(NPA-555-1212 and 555-1212) when FGC switching is combined with Directory Assistance switching. The combination of FGC Switched Access Service with DA Service is provided as set forth in 9 following. FGC may not be switched, in the terminating direction, to Switched Access Service Feature Groups B, C or D.

(6) The Company will establish a trunk group or groups for the customer at end office switches or access tandem switches where FGC switching is provided. When required for technical limitations, a separate trunk group will be established for each type of FGC switching arrangement provided. Different types of FGC or other switching arrangements may be combined in a single trunk group at the option of the Company.

6. Switched Access Service (Cont'd)

6.2 Provision and Description of Switched Access Service Arrangements (Cont'd)

6.2.3 Feature Group C (FGC) (Cont'd)

(B) Optional Features (where equipment is available)

(1) Local Switching Optional Features

(a) Automatic Number Identification (ANI)
(b) Service Class Routing
(c) Dial Pulse Address Signaling
(d) Revertive Pulse Address Signaling
(e) Delay Dial Start-Pulsing Signaling
(f) Immediate Dial Pulse Address Signaling
(g) Panel Call Indicator Address Signaling
(h) Alternate Traffic Routing
(i) Trunk Access Limitation
(j) End Office End User Line Service Screening Options for Use with Special Access Service Utilized for Connection with Switched Access Service
(k) Hunt Group Arrangement for Use with Special Access Service Utilized for Connection with Switched Access Service
(l) Uniform Call Distribution Arrangement for Use with Special Access Service Utilized for Connection with Switched Access Service
(m) Nonhunting Number for Use with Hunt Group Arrangement or Uniform Call Distribution Arrangement for Use with Special Access Service Utilized for Connection with Switched Access Service
(n) Band Advance Arrangement for Use with Special Access Service Utilized for Connection with Switched Access Service
(o) Operator Trunks - i.e., Pay Telephone (Pay trunks are provided only at Company electronic end offices and other Company end offices where equipment is available.)
(p) Multifrequency Address Signaling

6. Switched Access Service (Cont'd)

6.2 Provision and Description of Switched Access Service Arrangements (Cont'd)

6.2.3 Feature Group C (FGC) (Cont'd)

(B) Optional Features (where equipment is available) (Cont'd)

(2) Switched Transport Optional Features

(a) Supervisory Signaling (D)

(b) Improved Return Loss (N)
(c) Data Transmission Parameters
(d) Provision of Other Than Company Selected Traffic Routing
(e) Customer Specification of Feature Group Directionality (N)

(C) Transmission Specifications

FGC is provided with either Type B or Type C Transmission Specifications as follows:

- When routed directly to the end office either Type B or Type C is provided.

- When routed to an access tandem only Type B is provided.

- Type B or Type C is provided on the transmission path from the access tandem to the end office.

Type C Transmission Specifications are provided with Interface Group 1 when routed directly to an end office. Type B is provided with Interface Groups 2***, 6 and*** 9, whether routed directly to an end office or to an access tandem. (C) (C)

6. Switched Access Service (Cont'd)

6.2 Provision and Description of Switched Access Service Arrangements (Cont'd)

6.2.3 Feature Group C (FGC) (Cont'd)

(C) Transmission Specifications (Cont'd)

Type DB Data Transmission Parameters are provided with FGC for the transmission path between the customer's premises and the end office when directly routed to the end office, and Type DB Data Transmission Parameters are provided for the transmission path between the customer's premises and the access tandem and between the access tandem and the end office when routed via an access tandem.

(D) Testing Capabilities

FGC is provided, in the terminating direction where equipment is available, with seven digit access to balance (100 type) test line, milliwatt (102 type) test line, nonsynchronous or synchronous test line, automatic transmission measuring (105 type) test line, data transmission (107 type) test line, loop around test line, short circuit test line and open circuit test line. In addition to the Acceptance and In-Service Testing described in 6.1.6 preceding, Additional Tests are available as set forth in 13.3.5 following.

6.2.4 Feature Group D (FGD)

(A) Description

(1) FGD is provided at Company designated electronic end office switches whether routed directly or via Company designated electronic access tandem switches.

6. Switched Access Service (Cont'd)

6.2 Provision and Description of Switched Access Service Arrangements (Cont'd)

6.2.4 Feature Group D (FGD) (Cont'd)

(A) Description (Cont'd)

(2) FGD is provided as trunk side switching through the use of end office or access tandem switch trunk equipment. The switch trunk equipment is provided with wink start start-pulsing signals and answer and disconnect supervisory signaling.

(3) FGD switching is provided with inband multifrequency address signaling or out-of-band SS7 Signaling. With multifrequency address signaling and SS7 Signaling, up to twelve (12) digits of the called party number dialed by the customer's end user using dual tone multifrequency or dial pulse address signals will be provided by Company equipment to the customer's premises where the Switched Access Service terminates. Such address signals will be subject to the ordinary transmission capabilities of the Switched Transport provided.

(4) FGD switching, when used in the terminating direction, may be used to access valid NXXs in the local exchange, time or weather announcement services of the Company, community information services of an information service provider and other customers' services (by dialing the appropriate codes) when such services can be reached using valid NXX codes. When directly routed to an end office, only those valid NXX codes served by that office may be accessed. When routed through an access tandem, only those valid NXX codes served by end offices subtending the access tandem may be access. The customer will also be billed additional Non-Access Charges for calls to certain community information services, for which rates are applicable under the Company's General Subscriber Services Tariff, e.g., 976 (DIAL-IT) Network Service. Additionally, Non-Access Charges will also be billed for calls from a FGD trunk to another customer's service in accordance with that customer's applicable service rates when the Company performs the billing function for that customer.

6. Switched Access Service (Cont'd)

6.2 Provision and Description of Switched Access Service Arrangements (Cont'd)

6.2.4 Feature Group D (FGD) (Cont'd)

(A) Description (Cont'd)

(4) (Cont'd)

Calls in the terminating direction will not be completed to 950-XXXX ***CACs,*** local operator assistance (0- and 0+), Directory Assistance (411 (C)
and 555-1212), service codes (611 and 911) and ***101XXXX CAC***. Calls (C)
will be completed to Directory Assistance (NPA-555-1212 and 555-1212) when FGD switching is combined with Directory Assistance switching. The combination of FGD Switched Access Service with DA Service is provided as set forth in 9 following. FGD may not be switched, in the terminating direction, to Switched Access Service Feature Groups B, C or D.

(5) The Company will establish a trunk group or groups for the customer at end office switches or access tandem switches where FGD switching is provided. When required by technical limitations, a separate trunk group will be established for each type of FGD switching arrangement provided. Different types of FGD or other switching arrangements may be combined in a single trunk group at the option of the Company.

6. Switched Access Service (Cont'd)

6.2 Provision and Description of Switched Access Service Arrangements (Cont'd)

6.2.4 Feature Group D (FGD) (Cont'd)

(A) Description (Cont'd)

(6) The ***Carrier Access Code (CAC)*** for FGD switching is a uniform access code of the form ***101XXXX. This CAC*** will be the assigned access number of all FGD access provided to the customer by the Company. No ***CAC*** is required for calls to a customer over FGD Switched Access Service if the end user's telephone exchange service is arranged for presubscription to that customer as set forth in 13 following. (C) (C) (C)

Where no ***CAC*** is required, the number dialed by the customer's end user shall be a ***seven-digit*** or ***ten-digit*** number for calls in the North American Numbering Plan (NANP). The form of the numbers dialed by the customer's end user is NXX-XXXX, 0 or 1 + NXX-XXXX, NPA + NXX-XXXX, or 0 or 1 + NPA + NXX-XXXX. (C) (C)

When the ***101XXXX CAC*** is used, FGD switching also provides for dialing the digit 0 for access to the customer's operator, 911 for access to the Company's emergency reporting service, or at the customer's option, the end-of-dialing digit (#) for cut-through access to the customer's premises. (C)

6. Switched Access Service (Cont'd)

6.2 Provision and Description of Switched Access Service Arrangements (Cont'd)

6.2.4 Feature Group D (FGD) (Cont'd)

(A) Description (Cont'd)

(7) FGD switching will be arranged to accept calls from telephone exchange service locations without the need for dialing the ***101XXXX Carrier Access Code (CAC)***. Each telephone exchange service line may be marked with a presubscription code to identify which ***101XXXX CAC*** its calls will be directed to for intrastate service. Presubscription codes are applied as set forth in 13 following. (C) | (C)

FGD also may be used to recognize originating calls where the customer permits its end users to use a personal identification number (PIN) when dialing ***101XXXX*** to access the customer's terminal. Upon receipt of a tone,the end user will input his PIN and the called party number. Depending on the customer's capability, he may or may not receive an acknowledgment tone after dialing the PIN. This dialing method is available only to end users with DTMF address signaling. There is no additional charge for this dialing capability. (C)

(8) When a customer has had FGB access in an end office and subsequently replaces the FGB access with FGD access, at the mutual agreement of the customer and the Company, the Company will, for a period of ninety (90) days, direct calls dialed by the customer's end users using the customer's previous FGB ***CAC*** to the customer's FGD access service. The customer must be prepared to handle normally dialed FGD calls as well as calls dialed with the FGB ***CAC*** which requires the customer to receive additional address signaling from the end user. Such calls will be rated as FGD. (C) (C)

(B) Optional Features (where equipment is available)

(1) Local Switching Optional Features

(a) Automatic Number Identification (ANI)
(b) Service Class Routing
(c) Alternate Traffic Routing

6. Switched Access Service (Cont'd)

6.2 Provision and Description of Switched Access Service Arrangements (Cont'd)

6.2.4 Feature Group D (FGD) (Cont'd)

(B) Optional Features (where equipment is available) (Cont'd)

(1) Local Switching Optional Features (Cont'd)

(d) Call Gapping Arrangement
(e) Trunk Access Limitation
(f) Intrastate Carrier Option
(g) End Office End User Line Service Screening Options for Use with Special Access Service Utilized for Connection with Switched Access Service
(h) Hunt Group Arrangement for Use with Special Access Service Utilized for Connection with Switched Access Service
(i) Uniform Call Distribution Arrangement for Use with Special Access Service Utilized for Connection with Switched Access Service
(j) Nonhunting Number for Use with Hunt Group Arrangement or Uniform Call Distribution Arrangement for Use with Special Access Service Utilized for Connection with Switched Access Service
(k) Band Advance Arrangement for Use with Special Access Service Utilized for Connection with Switched Access Service
(l) Cut-Through
(m) Operator Trunk, Full Feature Arrangement
(n) Reserved For Future Use (C)
(o) Flexible Automatic Number Identification (Flex ANI)
(p) Multifrequency Address Signaling
(q) Signaling System 7 (SS7) Signaling
(r) Specification of Feature Group Directionality
(s) Common Channel Signaling/Signaling System 7 (CCS/SS7) with optional features as follows:
  (1) Charge Number (CN)
  (2) Carrier Selection Parameter (CSP)
  (3) Carrier Identification Parameter (CIP)
(t) Reserved For Future Use (C)
(u) Switched 64 Clear Channel Capability
(v) Feature Group D with 950 Access

6. Switched Access Service (Cont'd)

6.2 Provision and Description of Switched Access Service Arrangements (Cont'd)

6.2.4 Feature Group D (FGD) (Cont'd)

(B) Optional Features (where equipment is available) (Cont'd)

(2) Switched Transport Optional Features

(a) Supervisory Signaling (D)

(D)

(b) Improved Return Loss (N)

(c) Data Transmission Parameters

(d) Provision of Other Than Company Selected Traffic Routing

(e) Customer Specification of Feature Group Directionality (N)

(C) Transmission Specifications

FGD is provided with either Type A, Type B or Type C Transmission Specifications as follows:

- When routed directly to the end office either Type B or C is provided.

- When routed to an access tandem only Type A is provided.

- Type A is provided on the transmission path from the access tandem to the end office.

Type C Transmission Specifications are provided with Interface Group 1. Type A and Type B Transmission Specifications are provided with Interface Groups 2, ***6 and*** 9. (C)

Type DA Data Transmission Parameters are provided for the transmission path between the customer's premises and the access tandem and between the access tandem and the end office. Type DB Transmission Parameters are provided with FGD for the transmission path between the customer's premises and the end office when directly routed to the end office.

6. Switched Access Service (Cont'd)

6.2 Provision and Description of Switched Access Service Arrangements (Cont'd)

6.2.4 Feature Group D (FGD) (Cont'd)

(D) Testing Capabilities

FGD is provided, in the terminating direction where equipment is available, with seven (7) digit access to balance (100 type) test line, milliwatt (102 type) test line, nonsynchronous or synchronous test line, automatic transmission measuring (105 type) test line, data transmission (107 type) test line, loop around test line, short circuit test line and open circuit test line. In addition to the Acceptance and In-Service Testing described in 6.1.6 preceding, Additional Tests are available for FGD as set forth in ***Section*** 13.3.5 following. When SS7 (T)
Signaling is ordered, network compatibility and other operational tests will be performed cooperatively by the Company and the customer as specified in Technical Reference ***Publication GR-905***. (C)

6.2.5 Toll Free Code (TFC) Access Service

(A) Description

TFC Access Service is an originating trunk side switched service that is available to the customer via TFC Access Service trunk groups, or can be provided to the customer in conjunction with FGB, FGC or FGD Service. The service provides for the forwarding of end user dialed TFC calls to a Company Service Switching Point (SSP) which will initiate a TFC data base query to the Company's TFC data base to perform the customer identification function. The call is forwarded to the appropriate customer based on the TFC dialed number. The customer has the option of having the TFC dialed number (e.g., 800-NXX-XXXX) or, if the TFC to Local Exchange Number Translation optional feature described in 6.2.5(C)(1) is specified, a translated ten (10) digit local exchange number (i.e., NPA-NXX-XXXX), delivered to the customer premises.

6. Switched Access Service (Cont'd)

6.2 Provision and Description of Switched Access Service Arrangements (Cont'd)

6.2.5 Toll Free Code (TFC) Access Service (Cont'd)

(A) Description (Cont'd)

No access code is required for TFC Access Service. When the TFC call is originated by an end user, the Company will perform the TFC data base query based on the dialed digits to determine the customer location to which the call is to be routed. TFC Data Base Query Charges will be applied for each completed customer identification query. A query is deemed to have been completed when the signaling information enabling the call to be directed to the appropriate Carrier is returned by the TFC data base to the switch that originated the query. The TFC data base query will be performed from suitably equipped end offices or access tandems. If the call originates from an end office not equipped to perform the TFC data base query, the call will be routed to an access tandem at which the query function is available. Once customer identification has been established, the call will be routed to the customer. TFC calls may be routed to multiple Carriers based on the Local Access Transport Area (LATA) in which the call originates, however, calls originating from an end office switch not included in the customer's area of service for TFC Access Service will not be completed.

The provision of TFC Access Service requires access to the TFC Service Management System (TFC SMS) by a Responsible Organization on behalf of the customer or through direct access by the customer to the TFC SMS.

6. Switched Access Service (Cont'd)

6.2 Provision and Description of Switched Access Service Arrangements (Cont'd)

6.2.5 Toll Free Code (TFC) Access Service (Cont'd)

(A) Description (Cont'd)

When TFC Access Service originates from an end office equipped with equal access capabilities (i.e., FGD), all such service will be provisioned in accordance with the technical characteristics available with FGD. When TFC Access Service originates from an end office not equipped with equal access, such service will be provisioned in accordance with the technical characteristics available with FGC. For FGB customers, end offices lacking equal access capability or the TFC data base query function may only be served via an access tandem over FGD trunks or TFC Access Service trunk groups. Such service will be provisioned in accordance with the characteristics available with FGC or FGD. In either case, when more than one (1) access tandem is involved in the transport of a TFC Access Service call, standard transmission characteristics are not guaranteed.

Unless prohibited by network considerations (e.g., different dialing plans), the customer's TFC Access Service traffic may, at the option of the customer, be combined in the same trunk group arrangement with the customer's non-TFC Switched Access traffic except as follows. Combining TFC Access Service traffic with the customer's direct routed Switched Access traffic will be allowed only when the end office is equipped to perform the TFC data base query. When required by network considerations, a separate trunk group must be established for TFC Access Service.

6. Switched Access Service (Cont'd)

6.2 Provision and Description of Switched Access Service Arrangements (Cont'd)

6.2.5 Toll Free Code (TFC) Access Service (Cont'd)

(A) Description (Cont'd)

Premium usage rates and charges apply to TFC Access Service calls originated from end offices with equal access capability or calls originated from nonconforming offices via FGC. Non premium transitional usage rates apply to TFC Access Service calls originated from end offices lacking equal access capability and routed over FGB or TFC Access Service trunk groups. Additionally, the TFC Access Service Data Base Query Charge, and the TFC Data Base Optional Service Features Charge associated with various options ordered by the customer, as specified in 6.1.3(D) preceding and 6.2.5(C) following also apply.

(B) Technical Specifications

TFC Access Service trunk groups are provided with either Type B or Type C Transmission Specifications as follows:

- When routed directly to the end office either Type B or Type C is provided.

- When routed to an access tandem only Type B is provided.

- Type B or Type C is provided on the transmission path from the access tandem to the end office.

Type C Transmission Specifications are provided with Interface Group 1 when routed directly to an end office. Type B is provided with Interface Groups 2 through 9, whether routed directly to an end office or to an access tandem.

Company switch and customer premises interfaces and design blocking criteria for Feature Group C apply to TFC Access Service.

6. Switched Access Service (Cont'd)

6.2 Provision and Description of Switched Access Service Arrangements (Cont'd)

6.2.5 Toll Free Code (TFC) Access Service (Cont'd)

(C) TFC Data Base Optional Service Features

In addition to the TFC call routing (e.g., 1+800-NXX-XXXX) described in (A) preceding, at the customer's option, the Company will perform additional call routing service options as follows:

(1) TFC to Local Exchange Number Translation

This option allows a FTC Access Service customer to specify standard local exchange telephone numbers for TFC call completion at the terminating end. When a TFC call is to be routed to a local exchange telephone number, the TFC Access Service customer must provide to its Responsible Organization or to the TFC SMS, the full ten (10) digit local exchange number (NPA-NXX-XXXX) to be associated with the TFC number and indicate to which Carrier the local exchange telephone number is to be delivered. If the TFC to Local Exchange Number Translation optional feature is used, the customer will be unable to determine that such calls originated as TFC dialed calls (e.g., 1+800-NXX-XXXX) unless the customer also orders the Flexible Automatic Number Identification (Flex ANI) optional feature.

(2) Customized TFC Call Routing

This option allows for routing to variable terminating locations for TFC call completion based on the following criteria:

6. Switched Access Service (Cont'd)

6.2 Provision and Description of Switched Access Service Arrangements (Cont'd)

6.2.5 Toll Free Code (TFC) Access Service (Cont'd)

(C) TFC Data Base Optional Service Features (Cont'd)

(2) Customized TFC Call Routing (Cont'd)

- time of day
- day of week
- specific days of the year (e.g., December 25)
- percentage of traffic (in one percent increments)
- calling telephone number (unless technical limitations exist which do not provide for originating number identification)

With this option, TFC calls can be delivered to the Carrier in either the direct dialed TFC number format or in the local exchange telephone number translated format. The customer must enter the desired format and the necessary ten (10) digit local exchange telephone number, if any, into the TFC SMS or provide such information to its Responsible Organization for handling.

The rates for the TFC Data Base Optional Service Features described above are applied on a per query basis as set forth in 6.8.4(B) following. When a combination of one (1) or more of the optional features is requested, only one (1) such charge shall apply.

6. Switched Access Service (Cont'd)

6.2 Provision and Description of Switched Access Service Arrangements (Cont'd)

6.2.6 900 Access Service

(A) Description

Originating 900 Access Service is a trunk side switched service that is available to the customer via 900 Access Service trunk groups, or can be provided to the customer in conjunction with FGB, FGC, or FGD services. When combined with FGB, FGC, or FGD, 900 Access Service traffic can, at the option of the customer, be carried on the same group with non-900 Access traffic. When a 1+900-NXX-XXXX call is originated by an end user, the Company will perform the customer identification function based on the dialed digits to determine the customer to which the call is to be routed. If the call originates from an end office not equipped to provide the customer identification function, the call will be routed to an office where the function is available. Once customer identification has been established, the call will be routed to the customer.

The manner in which 900 Access Service is provided depends on whether the end office from which the call originates has equal access capability and/or the customer identification function. In equal access end offices which have customer identification function capability, 900 Access Service is provided in accordance with technical characteristics available with FGD (however, ANI is required with 900 Access Service), either direct to the end office or via an equal access tandem on existing trunk groups. In end offices not equipped with equal access capabilities, 900 Access Service will be provisioned in accordance with the technical characteristics available with FGC. Customers other than customers of FGC, may only be served via an access tandem over 900 Access Service trunks when the end office lacks equal access capability or the customer

6. Switched Access Service (Cont'd)

6.2 Provision and Description of Switched Access Service Arrangements (Cont'd)

6.2.6 900 Access Service (Cont'd)

(A) Description (Cont'd)

identification function. At the customer's option, 900 Access Service and TFC Access Service may be combined on the same trunk group. For a customer of FGC, 900 Access Service can be provided through an existing trunk group or separate FGC trunk group that handles 900 Access Service. 900 Access Service calls that are routed through operator services will be delivered at the equal access tandem over FGC or FGD. At the customer's option, 900 Access Service can be provided from both equal access and non-equal access end office switches over a FGD trunk group from the access tandem to the customer's premises if the customer can accept, on that trunk group, both exchange access and conventional signaling.

The Company will block calls to a 900 number dialed 1+ from pay telephones, 0+, 0-, 101XXXX, third number service, detention centers, mental institutions, hotel/motel service and calling cards. The customer may request, via an ASR to the Company, unblocking of 0+ and 0- 900 calling on all classes of services except detention centers.

At the Carrier's option all 900 attempts will be passed to the identified IC, who subsequently can screen the appropriate ANI II digits for call disposition. The ANI II digits are described in ***Technical Reference Publication FR-64***. This (T)
option is available in technically capable equal access offices.

900 Access Service originating from equal access end offices with the customer identification function will be provided using exchange access signaling with overlap outpulsing and ten-digit ANI. 900 Access Service originating from equal access end offices without the customer identification function, from end offices not having equal access capability, or for calls routed through operator services, will be provided using conventional signaling. On traffic using conventional signaling, other than FGC, the customer's facilities shall provide off hook supervision upon receipt of the transmitted digits.

6. Switched Access Service (Cont'd)

6.2 Provision and Description of Switched Access Service Arrangements (Cont'd)

6.2.6 900 Access Service (Cont'd)

(A) Description (Cont'd)

Premium usage rates and charge apply to 900 Access Service calls originated from end offices with equal access capability or calls originated from nonconforming offices via the customer of FGC. Non premium transitional usage rates apply to 900 Access Service calls originated from end offices lacking equal access capability and routed over FGB trunks or 900 Access Service trunk groups. Additionally, nonrecurring charges as specified in 6.1.3(F) preceding and Section 6.8.5 of the Embarq Local Operating Companies Tariff F.C.C. No. 1 also apply. (T)

(B) Technical Specifications

900 Access Service trunk groups are provided with either Type B or Type C Transmission Specifications as follows:

- When routed directly to the end office either Type B or Type C is provided.

- When routed to an access tandem only Type B is provided.

- Type B or Type C is provided on the transmission path from the access tandems to the end office.

  Type C Transmission Specifications are provided with Interface Group 1 when routed directly to an end office. Type B is provided with Interface Groups 2, 6 and 9, whether routed directly to an end office or to an access tandem.

  Company switch and customer premises interfaces and design blocking criteria for Feature Group C apply to 900 Access Service.

6. Switched Access Service (Cont'd)

6.2 Provision and Description of Switched Access Service Arrangements (Cont'd)

6.2.7 Interim 500 Access Service

(A) Description

Interim 500 Access Service is an outgoing service providing the customer identification function (500 NXX screening) based on the first six (6) digits of the dialed 500 number.

Originating Interim 500 Access Service is a trunk side switched service that is available to the customer via Interim 500 Access Service trunk groups, or can be provided to the customer in conjunction with FGC or FGD Service. When combined with FGC or FGD, Interim 500 Access Service traffic can, at the option of the customer, be carried on the same group with non-500 Access traffic. When a 1+500+NXX+XXXX or 0+500+NXX+XXXX call is originated by an end user, the Company will perform the customer identification function based on the dialed digits to determine the customer to which the call is to be routed. If the call originates from an end office not equipped to provide the customer identification function, the call will be routed to an office where the function is available. Once customer identification has been established, the call will be routed to the customer.

The manner in which Interim 500 Access Service is provided depends on whether the end office/tandem from which the call originates has equal access capability with the customer identification function. In equal access end offices/tandems which have customer identification function capability, Interim 500 Access Service is provided in accordance with technical characteristics available with FGD, either direct to the end office or via an equal access tandem on existing trunk groups. In end offices not equipped with equal access capabilities, Interim 500 Access Service will be provisioned in accordance with the technical characteristics available with FGC. At the customer's option, Interim 500 Access Service, 900 Access Service and TFC Access Service may be combined on the same trunk group. For a customer of FGC, Interim 500 Access Service can be provided through an existing trunk group or separate FGC trunk group which handles Interim 500 Access Service. At the customer's option, Interim 500 Access Service can be provided from both equal access and non-equal access end office switches over a FGD trunk group from the access tandem to the customer's premises if the customer can accept, on that trunk group, both exchange access and conventional signaling.

6. Switched Access Service (Cont'd)

6.2 Provision and Description of Switched Access Service Arrangements (Cont'd)

6.2.7 Interim 500 Access Service (Cont'd)

(A) Description (Cont'd)

At the carrier's option all 500 attempts will be passed to the identified IC, who subsequently can screen the appropriate ANI II digits for call disposition. The ANI II digits are described in Technical Reference Publication FR-64. This option is available in technically capable equal access offices.

Interim 500 Access Service originating from equal access end offices with the customer identification function will be provided using exchange access signaling with overlap outpulsing and ten (10) digit ANI. Interim 500 Access Service originating from equal access end offices/tandems without the customer identification function, from end offices not having equal access capability, or for calls routed through operator services, will be provided using conventional signaling. On traffic using conventional signaling, other than FGC, the customer's facilities shall provide off-hook supervision upon receipt of the transmitted digits.

Premium usage rates and charges apply to Interim 500 Access Service calls originated from end offices/tandems with equal access capability or calls originated from nonconforming offices via the customer of FGC. Additionally, nonrecurring charges as specified in 6.1.3(G) preceding and Section 6.8.7 of the Embarq Local Operating Companies Tariff F.C.C. (T)
No. 1 also apply. (T)

Pass-through charges apply to query information provided to the Company by connecting local exchange companies in order to perform the translations required to complete Interim 500 Access Service calls. The pass-through charges will be provided to the Company by the connecting local exchange company. Pass-through rates are set forth in Section 6.8.6 of the Embarq Local Operating Companies Tariff F.C.C. (T)
No. 1 and are applied on a per query basis. (T)

6. Switched Access Service (Cont'd)

6.2 Provision and Description of Switched Access Service Arrangements (Cont'd)

6.2.7 Interim 500 Access Service (Cont'd)

(B) Technical Specifications

Interim 500 Access Service trunk groups are provided with either Type B or Type C Transmission Specifications as follows:

- When routed directly to the end office either Type B or Type C is provided.

- When routed to an access tandem only Type B is provided.

- Type B or Type C is provided on the transmission path from the access tandem to the end office.

Type C Transmission Specifications are provided with Interface Group 1 when routed directly to an end office. Type B is provided with Interface Groups 2 through 9, whether routed directly to an end office or to an access tandem.

Company switch and customer premises interfaces apply to Interim 500 Access Service.

6. Switched Access Service (Cont'd)

6.2 Provision and Description of Switched Access Service Arrangements (Cont'd)

6.2.8 ***Reserved for Future Use*** (C)

(D)

(D)

6. Switched Access Service (Cont'd)

6.2 Provision and Description of Switched Access Service Arrangements (Cont'd)

6.2.8 Reserved for Future Use (Cont'd) (C)

(D)

(D)

6. Switched Access Service (Cont'd)

6.2 Provision and Description of Switched Access Service Arrangements (Cont'd)

6.2.8 Reserved For Future Use (Cont'd) (C)

(D)

(D)

6. Switched Access Service (Cont'd)

6.2 Provision and Description of Switched Access Service Arrangements (Cont'd)

6.2.9 OptiPoint Services

(A) Basic Service Description

OptiPoint services provide point-to-point high-speed synchronous optical fiber-based full duplex data transmission capabilities. There are three levels of OptiPoint services: OptiPoint-3 (OC3) is provided at a terminating bit rate of 155.52 Mbps; OptiPoint-12 (OC12) is provided at a terminating bit rate of 622.08 Mbps; and OptiPoint-48 (OC48) is provided at a terminated bit rate of 2488.32 Mbps.

OptiPoint services are provided for periods of ***one,*** three or five years. When a customer orders OptiPoint service, the customer and the Telephone Company will work cooperatively to plan, engineer, provision and manage the OptiPoint circuits. (N)

(1) Entrance Facilities

OptiPoint entrance facility channels may be used to connect the following:

- a customer designated premises to another customer designated premises, configured at wire center locations between the two premises; or

- a customer designated premises to a Telephone Company location where service configuration is performed.

6. Switched Access Service (Cont'd)

6.2 Provision and Description of Switched Access Service Arrangements (Cont'd)

6.2.9 OptiPoint Services (Cont'd)

(A) Basic Service Description (Cont'd)

(1) Entrance Facilities (Cont'd)

(a) Based on customer requirements, OC3 service may be provisioned in the following configurations:

(i) OC3 - three Synchronous Transport Signals (STS1) channels that each contain the following:

- one DS3 ***or STS1*** that is STS1 mapped; (C)

- up to 28 DS1s that are VT mapped;

- an STS1 channel without constraint to payload mapping***; or*** (C) (D) (D)

(ii) A single concatenated OC3c channel that is STS3c mapped.

(b) Based on customer requirements, OC12 service may be provisioned in the following configurations:

(i) OC12 - twelve STS1 channels ***which*** each contain: (T)

- one DS3 ***or STS1*** that is STS1 mapped; (C)

- up to 28 DS1s that are VT mapped;

- an STS1 channel without constraint to payload mapping***;*** (C) (D) (D)

(ii) Up to four concatenated OC3c channels that are STS3c mapped,

(iii) From one to three OC3c channels that are STS3c mapped, mixed with from three to nine STS1 channels subject to utilization of the total OC12 capacity; or

(iv) A single concatenated OC12c channel that is STS3c mapped.

6. Switched Access Service (Cont'd)

6.2 Provision and Description of Switched Access Service Arrangements (Cont'd)

6.2.9 OptiPoint Services (Cont'd)

(A) Basic Service Description (Cont'd)

(1) Entrance Facilities (Cont'd)

(c) Based on customer requirements, OC48 service may be provisioned in the following configurations:

(i) OC48 – forty-eight STS1 channels ***which*** each contain: (T)

- one DS3 ***or STS1*** that is STS1 mapped; (C)

(D)

- an STS1 channel without constraint to payload mapping***;*** (C)
(D)
(D)

(ii) Up to four concatenated ***OC12c*** channels that are STS12c mapped; (C)

(iii) Up to sixteen concatenated OC3c channels that are STS3c mapped;

(iv) From one to three OC3c channels that are STS3c mapped, mixed with from 39 to 45 STS1 channels subject to utilization of the total OC48 capacity; or

(v) From one to three OC12c channels that are STS12c mapped, mixed with from four to twelve OC3 channels subject to utilization of the total OC48 capacity.

Current SONET standards do not provide for asynchronous DS3 to DS1 multiplexing. An STS1 channel may be mapped for either one DS3 or 28 DS1s. However, DS1s within a DS3 are not accessible within the SONET architecture, and their performance cannot be guaranteed for this reason. When the customer requests that an OC3, OC12 or OC48 service be configured with a combination of DS3 and DS1 channels, a DS3 to DS1 multiplexing arrangement, as set forth in 6.1.3(B)(5)(d) preceding will be required.

6. Switched Access Service (Cont'd)

6.2 Provision and Description of Switched Access Service Arrangements (Cont'd)

6.2.9 OptiPoint Services (Cont'd)

(A) Basic Service Description (Cont'd)

(1) Entrance Facilities (Cont'd)

(c) (Cont'd)

Upon ordering OptiPoint service, the customer is responsible for identifying the STS signal configuration to be contained in each OC3, OC12, or OC48 service connection and each STS1, ***STS3,*** (C) and/or STS12 payload content. This information is used in determining the route and connection in the network. If a new configuration is requested subsequent to the initial activation, a service reconfiguration charge will apply on a per service basis, as set forth in 6.8.2(D)(10). The service reconfiguration charge is in addition to all applicable configuration node and configuration card charges associated with the new configuration.

OptiPoint service is provided with electronics that automatically activate in case of failure of the primary electronics. Since OptiPoint is a point-to-point service, SONET ring survivability will not be available. Rates for additional protection options requested by the customer will be quoted on an individual case basis and are in addition to the rates for OC3, OC12 and OC48 service.

OptiPoint entrance facilities provided to a customer's designated premises will be installed in a single, common space under Telephone Company control. An OptiPoint entrance facility may not be split between premises or terminated in multiple locations within a premises. The customer must provide suitable floor space, environmental controls and non-switched AC power to support the OptiPoint entrance facility at the customer's premises location.

6. Switched Access Service (Cont'd) (N)

6.2 Provision and Description of Switched Access Service Arrangements (Cont'd)

6.2.9 OptiPoint Services (Cont'd)

(A) Basic Service Description (Cont'd)

(1) Entrance Facilities (Cont'd)

OptiPoint entrance facilities will be provided with or without Telephone Company provided terminal equipment at the customer's premises. When a customer elects to furnish its own terminal equipment at the customer's premises, the customer will work cooperatively with the Telephone Company to provide a compatible physical interface, and will identify approved equipment types for use in conjunction with Telephone Company provided equipment. The customer is responsible for providing all facilities and cabling necessary to connect customer provided equipment to this interface.

OC3, OC12, and OC48 services may be configured for lower bandwidth services, at suitably equipped wire centers, by using appropriate OC3, OC12, or OC48 configuration nodes as set forth in (2) following.

OptiPoint entrance facilities are available only where facilities and operating conditions permit. The Telephone Company will work cooperatively with the customer to determine if suitable existing Telephone Company SONET based facilities are available to provide the service. The Telephone Company will not provision this service on facilities that are not suitable for OptiPoint. Where facilities and/or operating conditions do not permit the provision of OptiPoint entrance facilities, and the customer desires the Telephone Company to provision OptiPoint service, Special Construction charges, as set forth in Section 14 following, may apply. (N)

6. Switched Access Service (Cont'd)

6.2 Provision and Description of Switched Access Service Arrangements (Cont'd)

6.2.9 OptiPoint Services (Cont'd)

(A) Basic Service Description (Cont'd)

(2) Service Configuration

There are two types of charges associated with a service configuration as described following:

(a) Configuration Node - is an arrangement at the system level that allows an OC3 service bandwidth to add or drop lower level signals up to three DS3s ***or STS1s*** or three groups of twenty-eight DS1s. An OC12 service (C)
bandwidth can add or drop lower level signals up to four OC3s or twelve DS3s ***or STS1s*** or equivalent combinations of OC3s, DS3s, ***STS1s*** and (C)
DS1s. An OC48 service bandwidth can add or drop lower level signals up to four OC12s, sixteen OC3s, forty-eight DS3s ***or STS1s***, or (C)
equivalent combinations of OC12s, OC3s, DS3s ***and STS1s***. (C)

When the customer requests that a DS1 channel be connected to an OC48 service terminating at a Telephone Company central office, a DS3 to DS1 ***or STS1 to DS1*** multiplexing arrangement, as set forth in (C)
6.1.3(B)(5)(d) preceding, may be required.

Direct trunked transport can be connected between serving wire centers with configuration nodes at a lower OC-n speed than the channel termination, if the transport is between a lower speed configuration function and one of the following:

- another lower speed configuration function; or

- another lower speed channel termination.

All of the above terminations must be provided at the same speed as the transport.

6. Switched Access Service (Cont'd)

6.2 Provision and Description of Switched Access Service Arrangements (Cont'd)

6.2.9 OptiPoint Services (Cont'd)

(A) Basic Service Description (Cont'd)

(2) Service Configuration (Cont'd)

(b) Configuration Card - provides for the interface at which a channelized or lower speed service terminates or originates from an OptiPoint optical line terminated at a customer designated premises or a Telephone Company central office. DS1, DS3, OC3 concatenated, and STS-1 level cards are available for interfacing OptiPoint-3 service with lower level signals. DS1, DS3, OC3, OC3 concatenated, OC12 concatenated, ***and STS-1 level*** cards are available for interfacing with OptiPoint-12 service. DS3, OC3, OC12, OC3 concatenated, OC12 concatenated, ***and STS-1 level*** cards are available for interfacing with OptiPoint-48 service. When full OC3 and OC12 concatenated service is provided, no configuration node is required. (C) (C)

When a customer requests an OptiPoint service configuration, both the applicable node and card rate elements will apply. The rates for the configuration node and associated card(s) apply at the end office, and at each end of the entrance facility when Telephone Company provided terminal equipment is provided at the customer premises.

When the customer elects to furnish its own terminal equipment at the customer premises, the rates for the configuration node and associated card(s) apply only at the end of the entrance facility where Telephone Company equipment is provided.

Due to the technical limitations of SONET equipment, additional electronics are required when OptiPoint OC48 switched transport configurations exceed 66 miles. In such situations, the customer will be charged for the additional electronics on an individual case basis.

Rates and charges for the configuration node and configuration cards are set forth in 6.8.2 following. Additional labor charges as set forth in Section 13 following will apply to configuration changes for STS level service.

6. Switched Access Service (Cont'd)

6.2 Provision and Description of Switched Access Service Arrangements (Cont'd)

6.2.9 OptiPoint Services (Cont'd)

(A) Basic Service Description (Cont'd)

(2) Service Configuration (Cont'd)

The following diagrams depict generic views of the components of OptiPoint Service.

(a) OptiPoint Service with Telephone Company Provided Terminal Equipment at the Customer Premises

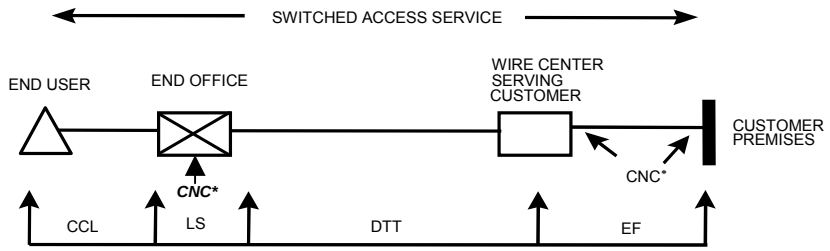

(C)

CCL: CARRIER COMMON LINE
LS: LOCAL SWITCHING
DTT: DIRECT-TRUNKED TRANSPORT
EF: ENTRANCE FACILITY
CNC: CONFIGURATION NODE & CARDS

* WHERE APPLICABLE

(b) OptiPoint Service without Telephone Company Provided Terminal Equipment at the Customer Premises

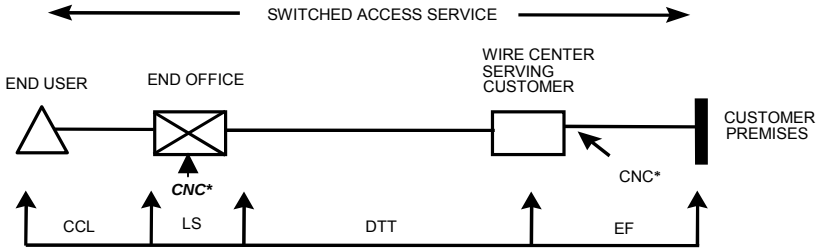

(C)

CCL: CARRIER COMMON LINE
LS: LOCAL SWITCHING
DTT: DIRECT-TRUNKED TRANSPORT
EF: ENTRANCE FACILITY
CNC: CONFIGURATION NODE & CARDS

* WHERE APPLICABLE

6. Switched Access Service (Cont'd)

6.2 Provision and Description of Switched Access Service Arrangements (Cont'd)

6.2.9 OptiPoint Services (Cont'd)

(B) Regulations

The rates and charges for OptiPoint services are set forth in 6.8.7 following and are in addition to any applicable rates and charges set forth in any other sections of this tariff. ***Nonrecurring charges and m***onthly recurring rates applicable for OptiPoint service are billed in advance. A nonrecurring service upgrade charge as described in 6.7.1(C)(3) following may also apply to OptiPoint services. (C)

(1) ***Nonrecurring charges are one-time charges that apply for a specific work activity (i.e., installation of service) and are developed at full cost recovery on labor hours per labor time basis. For customers who elect the one year commitment period the nonrecurring charge will apply for the installation of the service. However, if at the end of the one year commitment period the customer elects to renew their one year commitment plan, a nonrecurring charge will not apply for the renewal.*** (N) (N)

(2) Monthly recurring charges are flat recurring rates that apply each month or fraction thereof that a specific rate element is provided regardless of the amount of usage. For billing purposes, each month is considered to have 30 days. (T)

(3) OptiPoint service is available for minimum commitment periods of three or five years. If the customer requests that service be discontinued prior to the expiration of the ***one,*** three or five year minimum commitment period, a 50 percent penalty will be assessed for the remaining months of the term. For example, if a customer who has selected the three-year option terminates service in month 12, they will be charged 50 percent of the remaining 24 months of billing. Additionally, customers may discontinue service, without penalty, should the monthly recurring rates increase by 10 percent or more at any one time. If the customer does not specify renewal terms in writing 90 days prior to the expiration of the ***one,*** three or five ***year*** service period, the commitment period and OptiPoint rates in effect at the time of expiration will automatically renew. The customer can terminate OptiPoint service at the end of the minimum commitment period with no penalty or obligation to continue the service. (T) (N) (N)(T)

6. Switched Access Service (Cont'd)

6.3 Local Switching Optional Features (where equipment is available)

Following are descriptions of the various optional features that are available in lieu, or in addition to, the standard features provided with the Feature Groups.

(A) Call Denial on Line or Hunt Group

This option allows for the screening of terminating calls within the exchange, and for the completion only of calls to 411, 611, 911, TFC, 555-1212 and a Company specified set of NXXs within the Company local exchange calling area of the dial tone office in which the arrangement is provided. All other calls are routed to a reorder tone or recorded announcement. This feature is provided in all electronic end ***offices. It*** is available with Feature Group A. (C)

(B) Service Code Denial on Line or Hunt Group

This option allows for the screening of terminating calls within the exchange, and for disallowing completion of calls to 0-, 555 and N11 (e.g., 411, 611 and 911). This feature is provided where available in all Company electronic end ***offices. It*** is available with Feature Group A. (C)

(C) Hunt Group Arrangement

This option provides the ability to sequentially access one (1) of two (2) or more line side connections in the originating direction, when the access code of the line group is dialed. This feature is provided in all Company end offices. It is available with Feature Group A.

6. Switched Access Service (Cont'd)

6.3 Local Switching Optional Features (where equipment is available) (Cont'd)

(D) Uniform Call Distribution Arrangement

This option provides a type of multiline hunting arrangement which provides for an even distribution of calls among the available lines in a hunt group. Where available, this feature is provided in Company electronic end offices only. It is available with Feature Group A.

(E) Nonhunting Number for Use with Hunt Group or Uniform Call Distribution Arrangement

This option provides an arrangement for an individual line within a multiline hunt or uniform call distribution group that provides access to that line within the hunt or uniform call distribution group when it is idle or provides busy tone when it is busy, when the nonhunting number is dialed. Where available, this feature is only provided in Company electronic end offices only. It is available with Feature Group A.

(F) Automatic Number Identification (ANI)

This option provides the automatic transmission of a seven or ten digit number and information digits to the customer's premises for calls originating in the exchange, to identify the calling station. Customer use of the ANI feature is subject to the limitations set forth in 2.1.2(D) preceding. The ANI feature is an end office software function which is associated on a call-by-call basis with (1) all individual transmission paths in a trunk group routed directly between an end office and a customer's premises or, where technically feasible, with (2) all individual transmission paths in a trunk group between an end office and an access tandem, and trunk group between an access tandem and a customer's premises.

6. Switched Access Service (Cont'd)

6.3 Local Switching Optional Features (where equipment is available) (Cont'd)

(F) Automatic Number Identification (ANI) (Cont'd)

The seven (7) digit ANI telephone number is available with Feature Group B provided using Direct-Trunked Transport and with Feature Group C. With these Feature Groups, technical limitations may exist in Company switching facilities which require ANI to be provided only on a directly trunked basis. ANI will be transmitted on all calls except those originating from multiparty lines, pay telephones using Feature Group B, or when an ANI failure has occurred. Seven (7) digit ANI is not available with SS7 Signaling.

The ten (10) digit ANI telephone number is only available with Feature Group D. The ten (10) digit ANI telephone number consists of the Numbering Plan Area (NPA) plus the seven (7) digit ANI telephone number. The ten (10) digit ANI telephone number will be transmitted on all calls except those identified as multiparty line or ANI failure, in which case only the NPA will be transmitted (in addition to the information digit described below). Ten (10) digit ANI is provided with multifrequency address signaling or SS7 Signaling.

With Feature Group C, ANI is provided from end offices at which Company recording for end user billing is not provided, or where it is not required, as with TFC Service. It is not provided from end offices for which the Company needs to forward ANI to its recording equipment.

Where ANI cannot be provided, e.g., on calls from certain multi-party services, information digits will be provided to the customer.

6. Switched Access Service (Cont'd)

6.3 Local Switching Optional Features (where equipment is available) (Cont'd)

(F) Automatic Number Identification (ANI) (Cont'd)

The information digits identify: (1) telephone number is the station billing number - no special treatment required, (2) multiparty line - telephone number is a 2-, 4- or 8-party line and cannot be identified - number must be obtained via an operator or in some other manner, (3) ANI failure has occurred in the end office switch which prevents identification of calling telephone number - must be obtained by operator or in some other manner, (4) hotel/motel originated call which requires room number identification, (5) pay telephone, hospital, inmate, etc. call which requires special screening or handling by the customer and (6) call is an Automatic Identified Outward Dialed (AIOD) call from customer premises equipment. The ANI telephone number is the listed telephone number of the customer and is not the telephone number of the calling party. These ANI information digits are available with Feature Groups B, C and D.

(G) Up to 7 Digit Outpulsing of Access Digits to Customer

This option provides for the end office capability of providing up to seven (7) digits of the uniform access code (950-0XXX or 950-1XXX) to the customer's premises. The customer can request that only some of the digits in the access code be forwarded. The access code digits would be provided to the customer's premises using multifrequency signaling, and transmission of the digits would precede the forwarding of ANI if that feature were provided. It is available with Feature Group B.

6. Switched Access Service (Cont'd)

6.3 Local Switching Optional Features (where equipment is available) (Cont'd)

(H) Cut-Through

This option allows end users of the customer to reach the customer's premises by using the end of dialing digit (#). This option provides for connection of the call to the premises of the customer indicated by the ***101XXXX CAC*** upon receipt of the end-of-dialing digit (#). The Company will not record any other dialed digits for these calls. This option is available with Feature Group D. (C)

(I) Revertive Pulse Address Signaling

This option provides for a dc pulsing arrangement that transmits intelligence in the following manner:

(1) The equipment at the originating location presets itself to represent the number of pulses required and to count the pulses received from the terminating location.

(2) The equipment at the terminating location transmits a series of pulses by the momentary grounding of its battery supply until the originating location breaks the dc path to indicate that the required number of pulses has been counted.

This option ***is*** available with Feature Group C. (T)

6. Switched Access Service (Cont'd)

6.3 Local Switching Optional Features (where equipment is available) (Cont'd)

(J) Delay Dial Start-Pulsing Signaling

This option provides a method of indicating to the near end trunk circuit readiness to accept address signaling information by the far end trunk circuit. Delay dial is often referred to as an off-hook, on-hook signaling sequence. The delay dial signal is the off-hook interval and the start-pulsing signal is the on-hook interval. With integrity check, the calling office will not outpulse until a delay dial (off-hook) signal followed by a start-pulsing (on-hook) signal has been identified at the calling office. This option is available with Feature Group C.

(K) Immediate Dial Pulse Address Signaling

This option provides for the forwarding of dial pulses from the Company end office to the customer without the need of a start-pulsing signal from the customer. It is available with Feature Group C.

(L) Dial Pulse Address Signaling

This trunk size option provides for the transmission of number information, e.g., called number, between the end office switching system and the customer's premises (in either direction) by means of direct current pulses. It is available with Feature Group C.

(M) Panel Call Indicator Address Signaling

This option provides a dc pulsing arrangement in which each digit is transmitted as a series of four marginal and polarized impulses. It is available with Feature Group C.

6. Switched Access Service (Cont'd)

6.3 Local Switching Optional Features (where equipment is available) (Cont'd)

(N) Service Class Routing

This option provides the capability of directing originating traffic from an end office to a trunk group to a customer designated premises based on the line class of service (e.g., pay telephone, multiparty or hotel/motel), service prefix indicator (e.g., 0-, 0+, 01+ or 011+) or service access code (e.g., TFC or 900). It is provided in suitably equipped end office or access tandem switches and is available with Feature Groups C and D.

(O) Alternate Traffic Routing

(1) Multiple Customer Premises Alternate Routing

This option provides the capability of directing originating traffic from an end office (or appropriately equipped assess tandem) to a trunk group (the "high usage" group) to a customer designated premises until that group is fully loaded, and then delivering additional originating traffic (the "overflowing" traffic) from the same end office or access tandem to a different trunk group (the "final" group) to the same or a second customer designated premises. The customer shall specify the last trunk CCS desired for the high usage group. It is provided in suitably equipped end office or access tandem switches and is available with Feature Groups B, C and D.

6. Switched Access Service (Cont'd)

6.3 Local Switching Optional Features (where equipment is available) (Cont'd)

(O) Alternate Traffic Routing (Cont'd)

(2) End Office Alternative Routing When Ordered in Trunks

This option provides an alternate routing arrangement for customers who order in trunks and have access for a particular Feature Group to an end office via two routes: one route via an access tandem and one direct route. The feature allows the customer's originating traffic from the end office to be offered first to the direct trunk group and then overflow to the access tandem group. It is provided in suitably equipped end offices and is available with Feature Group B and D.

(P) Trunk Access Limitation

This option provides for the routing of originating 900 service calls to a specified number of transmission paths in a trunk group, in order to limit (choke) the completion of such traffic to the customer. Calls to the designated service which could not be completed over the subset of transmission paths in the trunk group, i.e., the choked calls, would be routed to reorder tone.

It is provided in all Company electronic end ***offices***. ***It*** is available with Feature Groups C and D. (C)

6. Switched Access Service (Cont'd)

6.3 Local Switching Optional Features (where equipment is available) (Cont'd)

(Q) Call Gapping Arrangement

This option, provided in suitably equipped end office switches, provides for the routing of originating calls to 900 service to be switched in the end office to all transmission paths in a trunk group at a prescribed rate of flow e.g., one call every five seconds, in order to limit (choked) the completion of such traffic to the customer. Calls to the designated service which are denied access by this feature, i.e., the choked calls, would be routed to a no-circuit announcement. It is provided in selected Feature Group D equipped end offices and is available only with Feature Group D.

(R) Flexible Automatic Number Identification (Flex ANI)

The Flex ANI feature provides an enhancement of the existing ANI Information Indicator (ANI II) digits which are included in the ANI optional feature as described in 6.3(F) preceding. The Flex ANI feature provides additional values for the ANI II digits that are associated with various classes of service not available with the standard ANI digits. This feature is provided per host central office on a Carrier Identification Code (CIC) basis. Flex ANI is available with Feature Group D service in equal access end offices where technically feasible and must be provisioned with the ten digit ANI optional feature.

6. Switched Access Service (Cont'd)

6.3 Local Switching Optional Features (where equipment is available) (Cont'd)

(S) Band Advance Arrangement for Use with Special Access Service Utilized for Connection with Switched Access Service

This option, provided in association with two (2) or more Special Access Service groups, provides for the automatic overflow of terminating calls to a Special Access Service group when that group has exceeded its call capacity to another Special Access Service group with a band designation equal to or greater than that of the overflowing Special Access Service group. This arrangement does not provide for call overflow from a group with a higher band designation to one with a lower one. This option is available with Feature Groups A, B, C, and D.

(T) End Office End User Line Service Blocking and Screening Options for Use with Special Access Service Utilized for Connection with Switched Access Service

The following options allow the customer to verify (by screening the called NPA and/or NXX) that an end user has dialed a telephone number which is in accordance with that end user's service agreement with the customer, e.g., WATS. Additionally, the customer may elect to have calls routed by the Company for completion or, alternatively, to have end user dialed calls blocked when such calls are in conflict with state policies. Other options with this arrangement are offered for 101XXXX dialing, which is only offered at a WATS Serving Office that has been converted to equal access, 700, TFC or 900 dialing. All 0+ calls will be passed to the designated customer unless elective screening options are requested. End offices that have been designated as WATS Serving Offices are as set forth in ***the*** National Exchange Carrier Association, Inc. Tariff F.C.C. No. 4. (T)
Paragraphs (1) through (8) following set forth the Company options subject to availability. Other arrangements requested by the customer may be provided on an Individual Case Basis (ICB) determined by availability of facilities. The combination of a WATS Special Access Circuit (WSAC), which is a dedicated Channel Termination between the customer's end user and a WATS Serving Office, is the minimum configuration required as specified in Section 7.2.10(A) following.

(1) Predetermined Geographical Screening

Verifies (by screening the called NPA and/or NXX on the basis of geographical bands selected by the Company) that the party originating a call is dialing a geographically determined or bounded area, called party address which is in accordance with that end user's service agreement with the customer. This option is provided in all Company electronic end offices in which the WSO function is available. It is available with Feature Groups C and D.

6. Switched Access Service (Cont'd)

6.3 Local Switching Optional Features (where equipment is available) (Cont'd)

(T) End Office End User Line Service Blocking and Screening Options for Use with Special Access Service Utilized for Connection with Switched Access Service (Cont'd)

(2) Multiple Carrier Access Blocking

Provides for the blocking of ***101XXXX*** dialed calls attempted by the end user on WSACs served from equal access WSOs. When this option is requested by the customer, the call attempt will be terminated to either a recorded message when available, or intercept. If this option is not requested ***101XXXX*** dialed calls will be delivered to the Carrier identified by the ***XXXX*** code. (C) (C)

(3) 700 Code Blocking

Provides for the blocking of 700 dialed calls attempted by the end user on WSACs. When this option is requested by the customer, the call attempt will be completed to either a recorded message when available, or intercept. If this option is not requested, 700 dialed calls will be delivered to the Carrier identified with the WSAC.

(4) Toll Free Code (TFC) Blocking

Provides for the blocking of TFC dialed calls attempted by the end user on WSACs. When this option is requested by the customer, the call attempt will be completed to either a recorded message when available, or intercept. If this option is not requested, TFC dialed calls will be completed in accordance with the Company's TFC Access translation tables.

(5) 900 Code Blocking

Provides for the blocking of 900 dialed calls attempted by the end user on WSACs. When this option is requested by the customer, the call attempt will be completed to either a recorded message when available, or intercept. If this option is not requested, 900 dialed calls will be delivered to the appropriate Carrier identified with the WSAC

6. Switched Access Service (Cont'd)

6.3 Local Switching Optional Features (where equipment is available) (Cont'd)

(T) End Office End User Line Service Blocking and Screening Options for Use with Special Access Service Utilized for Connection with Switched Access Service (Cont'd)

(6) Intrastate Jurisdictional Blocking

Provides for the blocking of intrastate dialed calls placed from a WSAC. When this option is requested by the customer, all intrastate dialed calls placed on this WSAC including 0+ calls will be completed to either a recorded message when available, or intercept.

(7) Intrastate IntraLATA Access Blocking

Provides for the blocking of intrastate intraLATA dialed calls placed form a WSAC. When this option is requested by the customer, all intrastate intraLATA dialed calls placed on this WSAC including 0+ calls will be completed to either a recorded message when available, or intercept.

(8) Intrastate IntraLATA Access Screening

Provides for the screening of intrastate intraLATA dialed calls placed from a WSAC. When this option is requested by the customer, all intrastate intraLATA dialed calls attempted on the WSAC, including 0+ calls, will be completed on the Company's network. Unless other arrangements are made between the Company and the customer, all intrastate intraLATA usage will be billed to the customer of record. Other billing arrangements, such as direct billing to the end user, are possible upon mutual agreement of all parties.

6. Switched Access Service (Cont'd)

6.3 Local Switching Optional Features (where equipment is available) (Cont'd)

(U) Hunt Group Arrangement for Use with Special Access Service Utilized for Connection with Switched Access Service

This option provides the ability to sequentially access one (1) of two (2) or more Special Access Services utilized for connection with Switched Access Service (e.g., TFC Service) in the terminating direction, when the hunting number of the Special Access Service group is forwarded from the customer to the Company. This feature is provided in all Company designated WATS Serving Offices. It is available with Feature Groups A, B, C and D.

(V) Uniform Call Distribution Arrangement for Use with Special Access Service Utilized for Connection with Switched Access Service

This option provides a type of multiline hunting arrangement which provides for an even distribution of terminating calls among the available Special Access Services utilized for connection with Switched Access Service in the hunt group. Where available, this feature is only provided in Company designated WATS Serving Offices. It is available with Feature Groups A, B, C and D.

(W) Nonhunting Number for Use with Hunt Group Arrangement or Uniform Call Distribution Arrangement for Use with Special Access Service Utilized for Connection with Switched Access Service

This option provides an arrangement for an individual Special Access Service utilized for connection with Switched Access Service with a multiline hunt or uniform call distribution group that provides access to that Special Access Service within the hunt or uniform call distribution group when it is idle or provides busy tone when it is busy, when the nonhunting number is dialed. Where available, this feature is only provided in Company designated WATS Serving Offices. It is available with Feature Groups A, B, C and D.

(X) InterLATA Call Denial on Line or Hunt Group

This chargeable optional feature allows for the screening of terminating calls and for the completion of only those calls which remain within the LATA of the dial tone office. All calls to end offices which are outside the LATA of the dial tone office are routed to a reorder tone or recorded announcement. This feature is provided only in appropriately equipped end offices. It is available with Feature Group A. A nonrecurring charge will apply to each FGA line to be screened. This charge will be equal to the sum of (1) the initial Service Connection Service Order Charge for business customers, and (2) the Central Office Work Charge for business customers; both charges are detailed in the Company's General Subscriber Services Tariff.

6. Switched Access Service (Cont'd)

6.3 Local Switching Optional Features (where equipment is available) (Cont'd)

(Y) Rotary Dial Station Signaling

This option provides for the transmission of called party address signaling form rotary dial stations to the customer's premises for originating calls. This option is provided in the form of a specific type of Transport Termination. It is available with Feature Group B, only on a directly trunked basis.

(Z) Operator Trunk - Pay Telephone

This option may be ordered to provide pay telephone operation. It is available only with Feature Group C and is provided in electronic end offices and other Company end offices where equipment is available. It is provided as a trunk type of Transport Termination.

This arrangement provides for initial coin return control and routing of 0+, 0-, 1+, 01+ or 011+ prefixed originating pay telephone calls requiring operator assistance to the customer's premises. Because operator assisted pay telephone traffic is routed over a trunk group dedicated to operator assisted calls, this arrangement is only provided in association with the Service Class Routing option.

The operator assistance pay telephone calling arrangement is also normally ordered by the customer in conjunction with the ANI optional feature, since the preponderance of trunk groups equipped with this arrangement will be terminated in the customer's TSPS systems, rather than in the customer's premises equipment.

6. Switched Access Service (Cont'd)

6.3 Local Switching Optional Features (where equipment is available) (Cont'd)

(Z) Operator Trunk - Pay Telephone (Cont'd)

When so equipped, the ANI feature provides for the forwarding of information digits which identify that the call has originated from a hotel or motel, and whether room number identification is required, or that special screening is required, e.g., for public stations, dormitory or inmate stations, or other screening arrangements agreed to between the customer and the Company.

6. Switched Access Service (Cont'd)

6.3 Local Switching Optional Features (where equipment is available) (Cont'd)

(AA) Operator Trunk - Full Feature

This option provides the operator functions available in the end office to the customer's operator. These functions are (1) Operator Released, (2) Operator Attached, (3) Coin Collect, (4) Coin Return and (5) Ringback. It is available with Feature Group D and is provided as a trunk type for Transport Termination. This feature is not available with SS7 Signaling.

(BB) Multifrequency Address Signaling

This feature, available with Feature Groups B, C and D, provides for the transmission of number information and control signals (e.g., number address signals, automatic number identification) between the end office switch and the customer's premises (in either direction). Multifrequency signaling arrangements make use of pairs of frequencies out of a group of six (6) frequencies. Specific information transmitted is dependent upon feature group and call type (i.e., POTs, coin or operator). This feature is not available in combination with SS7 Signaling.

(CC) Signaling System 7 (SS7) Signaling

This feature provides common channel out of band transmission of address and supervisory SS7 protocol signaling information between the end office switch or the tandem office switching system and the customer's designated premises. The signaling information is transmitted over facilities provided with the Common Channel Signaling/Signaling System 7 Interconnection Service as specified in 6.1.3(B)(5) preceding. This feature is available with Feature Group D and will be provided in accordance with the SS7 Interconnect Specifications described in Technical Reference ***Publication GR-905***. (C)

Where the end office is capable of passing the Calling Party Number (CPN) parameter within the initial address message, subject to the originating caller's use of available mechanisms to invoke the privacy of their number, the calling party number will be passed to the customer.

The Calling Party Number (CPN) parameter provides for the automatic transmission of the ten (10) digit directory number, associated with a calling station, to the customer's premises for calls originating in the LATA. The ten (10) digit telephone number consists of the NPA plus the seven (7) digit telephone number, which may or may not be the same number as the calling station's charge number. The ten (10) digit telephone number will be coded as presented, or restricted via a "privacy indicator" for delivery to the called end user. This parameter is provided with originating Feature Group D with SS7 Signaling. CPN is available where technically feasible and where the Company has made optional blocking available to the originating end user.

6. Switched Access Service (Cont'd)

6.3 Local Switching Optional Features (where equipment is available) (Cont'd)

(DD) Call Restriction

This option allows for the screening of terminating calls and for the completion only of calls to a Company specified set of service codes and NXXs within the Company local exchange calling area of the dial tone office in which the arrangement is provided. All other "toll" calls are routed to a reorder tone or recorded announcement. It is available with Feature Group A only in those offices where such capabilities exist.

(EE) Charge Number (CN)

This option provides for the automatic transmission of the ***ten-digit*** billing number of the calling station number and originating line information. Customer use of the Charge Number (CN) feature is subject to the limitations set forth in 2.1.2(D) preceding. The specific protocol for CN is contained in Technical Publication TR-TSV-000905 and related documentation. This feature is available only with Feature Group D when the SS7 Signaling option is specified. (T)

(FF) Carrier Selection Parameter (CSP)

This feature provides for the automatic transmission of a signaling indicator ***that*** signifies to the customer whether or not the call being processed originated from a presubscribed line. If the line was presubscribed, the indicator will signify if the end user did or did not dial ***101XXXX***. This feature is provided with originating Feature Group D with SS7 Signaling. (T) (C)

6. Switched Access Service (Cont'd)

6.3 Local Switching Optional Features (where equipment is available) (Cont'd)

(GG) Call Screening

This feature provides for the passing of call screening digits on all calls that originate from Feature Group A lines. With Call Screening, the FGA dial tone office switched translations associated with the FGA line generate the ANI information digits of 07 on each call passed. Call Screening is available with Feature Group A in suitably equipped end offices.

(HH) Switched 64 Clear Channel Capability

This option provides for a connection capable of transmitting 64.0 kbps digital data with clear channel capability between the customer's designated premises and a suitably equipped end office. Switched 64 Clear Channel Capability allows a customer to transport an all zero octet over a DS1/1.544 Mbps high capacity channel providing an available combined maximum 1.536 Mbps data rate. This option requires all digital facilities, including the use of Interface Group 6 or 9, and is available only with Feature Group D from end offices capable of providing SS7 signaling, Bipolar with Eight Zero Substitution (B8ZS) line code format and Integrated Services Digital Network (ISDN), or other switched data base services. Switched 64 Clear Channel Capability is available in suitable equipped end offices as specified in the National Exchange Carrier Association***, Inc.*** Tariff F.C.C. No. 4. (T)

(II) Intrastate Carrier Option

This option allows for Feature Group D end office or access tandem switches to forward the intrastate calls of one (1) or more carriers to the customer (i.e., the Company is able to route originating intrastate calls to a customer other than the one designated by the end user either through presubscription 101XXXX dialing). This arrangement requires provision of written verification to the Company that the customer is authorized to forward such calls. The written verification must be in the form of a letter of agency authorizing the customer to order the option on behalf of the carrier. This option is only provided at Company end offices or access tandems equipped with Feature Group D.

6. Switched Access Service (Cont'd)

6.3 Local Switching Optional Features (where equipment is available) (Cont'd)

(JJ) Feature Group D with 950 Access

This option may be ordered to route calls from a designated 950-XXXX access code to Feature Group D Access Service. The Company will direct designated 950-XXXX calls dialed by the customer's end users to the customer's FGD Access Service, using FGD signaling protocols and technical specifications. The customer must be prepared to differentiate between standard FGD calls and 950-dialed calls delivered over the same trunks. FGD with 950 Access will be provided from equal access conforming Company end offices and tandems, where technically feasible. Calls delivered to the customer's FGD Access Service when the customer's end user dials a 950-XXXX access code will be rated as FGD.

When a customer has FGD Access Service and does not have FGB Access Service from a particular end office, this option may be ordered to activate a customer's designated 950-XXXX access code in that end office. When a customer has both FGB and FGD Access Services and orders this option in a particular end office, the Company will direct designated 950-XXXX calls dialed by the customer's end users to the customer's FGD Access Service in that end office. The customer is prohibited from having 950-XXXX Access to originating FGD and originating FGB in the same end office or tandem utilizing the same 950-XXXX access code.

In Company end offices and tandems that do not support four (4) digit Carrier Identification Codes (CIC) for FGD, the 950-XXXX access code is only available to customers using a three (3) digit CIC in the form 950-0XXX or 950-1XXX. In Company end offices and tandems that do support four (4) digit CIC for FGD, the 950-XXXX access code is available to customers using either a three (3) digit or four (4) digit CIC in the forms 950-0XXX, 950-1XXX and 950-XXXX. In any event, the CIC specified by the customer, either three (3) digit or four (4) digit, must be a valid CIC assigned for use by that customer. This option is available only with Feature Group D.

(KK) Reserved For Future Use (C)

(D)

(D)

6. Switched Access Service (Cont'd)

6.3 Local Switching Optional Features (where equipment is available) (Cont'd)

(LL) Carrier Identification Parameter (CIP)

This option provides for the delivery of the Carrier Identification Code ***(CIC)*** or the (C)
Carrier Access Code (CAC), 101XXXX, to the customer within the initial address (C)
message SS7 call setup protocol. CIP is forwarded on originating Feature Group D Switched Access calls transported over SS7 trunks. CIP is available at no charge from suitably equipped end offices and access tandems.

(MM) Extended Superframe Format (ESF)

The ESF optional feature is available at suitably equipped end offices, and passes a customer provided framing format for 1.544 Mbps High Capacity Service. ESF extends the customer's 1.544 Mbps framing structure from twelve (12) to twenty-four (24) frames and divides the 8 Kbps 193rd bit position pattern into three (3) distinct functionalities: 2 Kbps for frame synchronization, 2 Kbps for cyclic redundancy checking and 4 Kbps used primarily for performance monitoring information.

6. Switched Access Service (Cont'd)

6.4 Service Provisioning

Each Switched Access Service transmission path is provided with standard transmission specifications. There are three (3) different standard specifications (Types A, B and C). The standard for a particular transmission path is dependent on the Feature Group, the Interface Group and whether the service is directly routed or via an access tandem. The available transmission specifications are set forth in 6.4.1 following. Data Transmission Parameters are also provided with each Switched Access Service transmission path. The Company will, upon notification by the customer that the data parameters set forth in 6.4.2(A) or 6.4.2(B) following are not being met, conduct tests independently or in cooperation with the customer, and take any necessary action to insure that the data parameters are met.

The Company will maintain existing transmission specifications on functioning service configurations installed prior to the effective date of this Tariff except that service configurations having performance specifications exceeding the standards listed in this provision will be maintained at the performance levels specified in this Tariff.

The transmission specifications contained in this Section are immediate action limits. Acceptance limits are set forth in Technical Reference ***Publication GR-3334***. This Technical Reference also provides the basis for determining Switched Access Service maintenance limits. (C)

6.4.1 Standard Transmission Specifications

Following are descriptions of the three (3) Standard Transmission Specifications available with Switched Access Service arrangements. The specific applications in terms of the Service Arrangement and Interface Groups with which the Service Arrangement Standard Transmission Specifications are provided are set forth in 6.2.1(C), 6.2.2(C), 6.2.3(C), 6.2.4(C), 6.2.5(B) and 6.2.6(B) preceding.

6. Switched Access Service (Cont'd)

6.4 Service Provisioning (Cont'd)

6.4.1 Standard Transmission Specifications (Cont'd)

(A) Type A Transmission Specifications

Type A Transmission Specifications are provided with the following parameters:

(1) Loss Deviation

The maximum Loss Deviation of the 1004 Hz loss relative to the Expected Measured Loss (EML) is ±2.0 dB.

(2) Attenuation Distortion

The maximum Attenuation Distortion in the 404 to 2804 Hz frequency band relative to loss at 1004 Hz is -1.0 dB to +3.0 dB.

(3) C-Message Noise

The maximum C-Message Noise for the transmission path at the route miles listed is less than or equal to:

Route Miles	C-Message Noise
less than 50	32 dBrnCO
51 to 100	34 dBrnCO
100 to 200	37 dBrnCO
201 to 400	40 dBrnCO
401 to 1000	42 dBrnCO

(4) C-Notch Noise

The maximum C-Notch Noise, utilizing a -16 dBmO holding tone, is less than or equal to 45 dBrnCO.

6. Switched Access Service (Cont'd)

6.4 Service Provisioning (Cont'd)

6.4.1 Standard Transmission Specifications (Cont'd)

(A) Type A Transmission Specifications (Cont'd)

(5) Echo Control

Echo Control, identified as Equal Level Echo Path Loss (ELEPL), and expressed as Echo Return Loss (ERL) and Singing Return Loss (SRL), is dependent on the routing, i.e., whether the service is routed directly from the customer's Point of Termination (POT) to the end office or via an access tandem. It is equal to or greater than the following:

	Echo Return Loss	Singing Return Loss
POT To Access Tandem	21 dB	14 dB
POT to End Office		
- Direct	N/A	N/A
- Via Access Tandem	16 dB	11 dB

(B) Type B Transmission Specifications

Type B Transmission Specifications are provided with the following parameters:

6. Switched Access Service (Cont'd)

6.4 Service Provisioning (Cont'd)

6.4.1 Standard Transmission Specifications (Cont'd)

(B) Type B Transmission Specifications (Cont'd)

(1) Loss Deviation

The maximum Loss Deviation of the 1004 Hz loss relative to the Expected Measured Loss (EML) is ±2.5 dB.

(2) Attenuation Distortion

The maximum Attenuation Distortion in the 404 to 2804 Hz frequency band relative to loss at 1004 Hz is -2.0 dB to +4.0 dB.

(3) C-Message Noise

The maximum C-Message Noise for the transmission path at the route miles listed is less than or equal to:

	C-Message Noise*	
Route Miles	Type B1	Type B2
less than 50	32 dBrnCO	35 dBrnCO
51 to 100	33 dBrnCO	37 dBrnCO
101 to 200	35 dBrnCO	40 dBrnCO
201 to 400	37 dBrnCO	43 dBrnCO
401 to 1000	39 dBrnCO	45 dBrnCO

* For Feature Groups C and D only Type B2 will be provided. For Feature Groups A and B, Type B1 or B2 will be provided as set forth in Technical Reference ***Publication GR-3334***. (C)

6. Switched Access Service (Cont'd)

6.4 Service Provisioning (Cont'd)

6.4.1 Standard Transmission Specifications (Cont'd)

(B) Type B Transmission Specifications (Cont'd)

(4) C-Notch Noise

The maximum C-Notch Noise, utilizing a -16 dBmO holding tone, is less than or equal to 47 dBrnCO.

(5) Echo Control

Echo Control, identified as Impedance Balance for FGA and FGB and Equal Level Echo Path Loss (ELEPL) for FGC and FGD, and expressed as Echo Return Loss (ERL) and Singing Return Loss (SRL), is dependent on the routing, i.e., whether the service is routed directly from the customer's Point of Termination (POT) to the end office or via an access tandem. The ERL and SRL also differ by Feature Group, type of termination and type of transmission path. They are equal to or greater than the following:

	Echo Return Loss	Singing Return Loss
POT to Access Tandem		
- Terminated in 4-Wire Trunk	21 dB	14 dB
- Terminated in 2-Wire Trunk	16 dB	11 dB
POT to End Office		
- Direct	16 dB	11 dB

6. Switched Access Service (Cont'd)

6.4 Service Provisioning (Cont'd)

6.4.1 Standard Transmission Specifications (Cont'd)

(B) Type B Transmission Specifications (Cont'd)

(5) Echo Control (Cont'd)

	Echo Return Loss	Singing Return Loss
- Via Access Tandem		
- For FGB Access	8 dB	4 dB
- For FGC Access (Effective 4-Wire Transmission Path at End Office)	16 dB	11 dB
- For FGC Access (Effective 2-wire Transmission Path at End Office)	13 dB	6 dB

(C) Type C Transmission Specifications

Type C Transmission Specifications are provided with the following parameters:

6. Switched Access Service (Cont'd)

6.4 Service Provisioning (Cont'd)

6.4.1 Standard Transmission Specifications (Cont'd)

(C) Type C Transmission Specifications (Cont'd)

(1) Loss Deviation

The maximum Loss Deviation of the 1004 Hz loss relative to the Expected Measured Loss (EML) is ±3.0 dB.

(2) Attenuation Distortion

The maximum Attenuation Distortion in the 404 to 2804 Hz frequency band relative to loss at 1004 Hz is -2.0 dB to +5.5 dB.

(3) C-Message Noise

The maximum C-Message Noise for the transmission path at the route miles listed is less than or equal to:

	C-Message Noise*	
Route Miles	Type C1	Type C2
less than 50	32 dBrnCO	38 dBrnCo
51 to 100	33 dBrnCO	39 dBrnCO
101 to 200	35 dBrnCO	41 dBrnCO
201 to 400	37 dBrnCO	43 dBrnCO
401 to 1000	39 dBrnCO	45 dBrnCO

* For Feature Groups C and D only Type C2 will be provided. For Feature Groups A and B, Type C1 or C2 will be provided as set forth in Technical Reference ***Publication GR-3334***. (C)

6. Switched Access Service (Cont'd)

6.4 Service Provisioning (Cont'd)

6.4.1 Standard Transmission Specifications (Cont'd)

(C) Type C Transmission Specifications (Cont'd)

(4) C-Notch Noise

The maximum C-Notch Noise, utilizing a -16 dBmO holding tone, is less than or equal to 47 dBrnCO.

(5) Echo Control

Echo Control, identified as Return Loss and expressed as Echo Return Loss (ERL) and Singing Return Loss (SRL) is equal to or greater than the following:

	Echo Return Loss	Singing Return Loss
POT to End Office		
- Direct	13 dB	6 dB

6. Switched Access Service (Cont'd)

6.4 Service Provisioning (Cont'd)

6.4.2 Data Transmission Parameters

Two (2) types of Data Transmission Parameters, i.e., Type DA and Type DB, are provided for the Feature Group arrangements. The specific applications in terms of the Feature Groups with which they are provided are set forth in 6.2.1(C), 6.2.2(C), 6.2.3(C) and 6.2.4(C) preceding. Following are descriptions of each.

(A) Data Transmission Parameters Type DA

(1) Signal to C-Notched Noise Ratio

The Signal to C-Notched Noise Ratio is equal to or greater than 33 dB.

(2) Envelope Delay Distortion

The maximum Envelope Delay Distortion for the frequency bands and route miles specified is:

	604 to 2804 Hz
less than 50 route miles	500 microseconds
equal to or greater than 50 route miles	900 microseconds

	1004 to 2404 Hz
less than 50 route miles	200 microseconds
equal to or greater than 50 route miles	400 microseconds

6. Switched Access Service (Cont'd)

6.4 Service Provisioning (Cont'd)

6.4.2 Data Transmission Parameters (Cont'd)

(A) Data Transmission Parameters Type DA (Cont'd)

(3) Impulse Noise Counts

The Impulse Noise Counts exceeding a 65 dBrnCO threshold in fifteen (15) minutes is no more than fifteen (15) counts.

(4) Intermodulation Distortion

The Second Order (R2) and Third Order (R3) Intermodulation Distortion products are equal to or greater than:

Second Order (R2)	33 dB
Third Order (R3)	37 dB

(5) Phase Jitter

The Phase Jitter over the 4-300 Hz frequency band is less than or equal to 5° peak-to-peak.

(6) Frequency Shift

The maximum Frequency Shift does not exceed -2 to +2 Hz.

(B) Data Transmission Parameters Type DB

(1) Signal to C-Notched Noise Ratio

The Signal to C-Notched Noise Ratio is equal to or greater than 30 dB.

6. Switched Access Service (Cont'd)

6.4 Service Provisioning (Cont'd)

6.4.2 Data Transmission Parameters (Cont'd)

(B) Data Transmission Parameters Type DB (Cont'd)

(2) Envelope Delay Distortion

The maximum Envelope Delay Distortion for the frequency bands and route miles specified is:

	604 to 2804 Hz
less than 50 route miles	800 microseconds
equal to or greater than 50 route miles	1000 microseconds

	1004 to 2404 Hz
less than 50 route miles	320 microseconds
equal to or greater than 50 route miles	500 microseconds

(3) Impulse Noise Counts

The Impulse Noise Counts exceeding a 67 dBrnCO threshold in fifteen (15) minutes is no more than fifteen (15) counts.

(4) Intermodulation Distortion

The Second Order (R2) and Third Order (R3) Intermodulation Distortion products are equal to or greater than:

Second Order (R2)	31 dB
Third Order (R3)	34 dB

6. Switched Access Service (Cont'd)

6.4 Service Provisioning (Cont'd)

6.4.2 Data Transmission Parameters (Cont'd)

(B) Data Transmission Parameters Type DB (Cont'd)

(5) Phase Jitter

The Phase Jitter over the 4-300 Hz frequency band is less than or equal to 7° peak-to-peak.

(6) Frequency Shift

The maximum Frequency Shift does not exceed -2 to +2 Hz.

6.4.3 Interface Groups

Four Interface Groups are provided for terminating an Entrance Facility at the customer's premises. Interface Groups define the transmission characteristics associated with the Entrance Facility and all transport facilities with which it is interconnected.

Network Channel (NC) Codes, Feature Group and Technical Specifications, provide the available supervisory signaling options. The combination of the Interface Group and supervisory signaling ordered will identify the appropriate premises interface code (Network Channel Interface Code). Feature Group and Technical Specifications are set forth in Technical Reference ***Publication GR-3334***. (C) (C)

Depending upon the Interface Group chosen by the customer, Multiplexing arrangements may also be required. When the customer requests interconnection of an Entrance Facility to a Direct-Trunked Transport or Tandem-Switched Transport, and the interconnecting facilities use connections with different capacities or bandwidths, Multiplexing arrangements are required to provide the interconnection. A Multiplexing arrangement is also required to interconnect certain facilities with specific switch types. Multiplexing is available as set forth in 6.1.3(B)(5)(d) preceding.

6. Switched Access Service (Cont'd)

6.4 Service Provisioning (Cont'd)

6.4.3 Interface Groups (Cont'd)

As a result of the customer's Access Order and the type of Company transport facilities serving the customer's premises, the need for signaling conversations or two-wire to four-wire conversions, or the need to terminate digital or high frequency facilities in channel bank equipment may require that Company equipment be placed at the customer's premises. For example, if a voice frequency interface is ordered by the customer and the Company facilities serving the customer's premises are digital, then Company channel bank equipment must be placed at the customer's premises in order to provide the voice frequency interface ordered by the customer.

Interface Group 1 is provided with Type C Transmission Specifications, and Interface Groups 2***, 6 and*** 9 are provided with Type A or B Transmission Specifications, depending on the Feature Group and whether the Access Service is routed directly or through an access tandem. All Interface Groups are provided with Data Transmission Parameters. (C)

Only certain premises interfaces are available at the customer's premises. The premises interfaces associated with the Interface Groups may vary among Feature Groups. The various premises interfaces which are available with the Interface Groups, and the Feature Groups with which they may be used, are set forth in (G) following.

6. Switched Access Service (Cont'd)

6.4 Service Provisioning (Cont'd)

6.4.3 Interface Groups (Cont'd)

(A) ***Interface Group 1*** (T)

Interface Group 1, except as set forth in the following, provides two-wire analog voice frequency transmission at the Point of Termination at the customer's premises. The interface is capable of transmission of voice and associated telephone signals within the frequency bandwidth of approximately 300 to 3000 Hz.

Interface Group 1 is not provided in association with FGC and FGD when the first point of switching is an access tandem. In addition, Interface Group 1 is not provided in association with FGB, FGC or FGD when the first point of switching provides only four-wire terminations.

The transmission path between the Point of Termination at the customer's premises and the first point of switching may be comprised of any form or configuration of plant capable of and typically used in the telecommunications industry for the transmission of voice and associated telephone signals within the frequency bandwidth of 300 to 3000 Hz.

The interface is provided with loop supervisory signaling. When the interface is associated with FGA, such signaling will be loop start or ground start signaling. When the interface is associated with FGB, FGC or FGD, such signaling, except for two-way calling which is E&M signaling, will be reverse battery signaling.

6. Switched Access Service (Cont'd)

6.4 Service Provisioning (Cont'd)

6.4.3 Interface Groups (Cont'd)

(B) ***Interface Group 2*** (T)

Interface Group 2 provides four-wire analog voice frequency transmission at the Point of Termination at the customer's premises. The interface is capable of transmission of voice and associated telephone signals within the frequency bandwidth of approximately 300 to 3000 Hz.

The transmission path between the Point of Termination at the customer's premises and the first point of switching may be comprised of any form or configuration of plant capable of and typically used in the telecommunications industry for the transmission of voice and associated telephone signals within the frequency bandwidth of approximately 300 to 3000 Hz.

The interface is provided with loop supervisory signaling. When the interface is associated with FGA, such signaling will be loop start or ground start signaling. When the interface is associated with FGB, FGC or FGD, such signaling, except for two-way calling which is E&M signaling, will be reverse battery signaling.

(C) Reserved for Future Use

6. Switched Access Service (Cont'd)

6.4 Service Provisioning (Cont'd)

6.4.3 Interface Groups (Cont'd)

(D) ***Reserved for Future Use*** (C)

(D)

(D)

6. Switched Access Service (Cont'd)

6.4 Service Provisioning (Cont'd)

6.4.3 Interface Groups (Cont'd))

(E) ***Interface Group 6*** (T)

Interface Group 6 provides DS1 level digital transmission at the Point of Termination at the customer's premises. The interface is capable of transmitting electrical signals at a nominal 1.544 Mbps, with the capability to channelize up to twenty-four (24) voice frequency transmission paths. Before the first point of switching, when analog switching utilizing analog terminations is provided, the Company will provide multiplex and channel bank equipment to derive twenty-four (24) transmission paths of a frequency bandwidth of approximately 300 to 3000 Hz. When digital switching or analog switching with digital Carrier terminations is provided, the Company will provide, at the first point of switching, a DS1 Signal in D3/D4 Format.

The interface is provided with individual transmission path bit stream supervisory signaling.

6. Switched Access Service (Cont'd)

6.4 Service Provisioning (Cont'd)

6.4.3 Interface Groups (Cont'd)

(F) ***Interface Group 9*** (T)

Interface Group 9 provides DS3 level digital transmission at the Point of Termination at the customer's premises. The interface is capable of transmitting electrical signals at a nominal 44.736 Mbps, with the capability to channelize up to six hundred and seventy-two (672) voice frequency transmission paths. Before the first point of switching, when analog switching utilizing analog terminations is provided, the Company will provide multiplex and channel bank equipment to derive up to six hundred and seventy-two (672) transmission paths of a frequency bandwidth of approximately 300 to 3000 Hz. When digital switching, or analog switching with digital Carrier terminations is provided, the Company will provide, at the first point of switching, DS1 Signals in D3/D4 Format.

The interface is provided with individual transmission path bit stream supervisory signaling.

6. Switched Access Service (Cont'd)

6.4 Service Provisioning (Cont'd)

6.4.3 Interface Groups (Cont'd)

(G) Available Premises Interface Codes

Following is a matrix showing, for each Interface Group, which premises interfaces are available as a function of the Company Switch supervisory signaling and Feature Group. Each premises interface is identified by a specific premises interface code. Voice trunks are available with Interface Groups 1, ***2***, 6 and 9. Signaling links are available with Interface Groups 6 (C)
and 9. For explanations of these codes, see ***Section*** 7.3.1 following. (T)

6. Switched Access Service (Cont'd)

6.4 ***Service Provisioning*** (Cont'd) (C)

6.4.3 Interface Groups (Cont'd) (T)

(G) Available Premises Interface Codes (Cont'd) (T)

Interface Group	Company Switch Supervisory Signaling	Premises Interface Code	Feature Group A	B	C	D	
1	LO	2LS2	X				
	LO	2LS3	X				
	GO	2GS2	X				
	GO	2GS3	X				
	RV, EA, EB, EC	***4EA2-E***		***X***	***X***	***X***	(C)
	RV, EA, EB, EC	***4EA3-E***		***X***	***X***	***X***	
	RV, EA, EB, EC	***4EA2-M***		***X***	***X***	***X***	
	RV, EA, EB, EC	***4EA3-M***		***X***	***X***	***X***	
	RV, EA, EB, EC	***6EB2-E***		***X***	***X***	***X***	
	RV, EA, EB, EC	***6EB3-E***		***X***	***X***	***X***	
	RV, EA, EB, EC	***6EB2-M***		***X***	***X***	***X***	
	RV, EA, EB, EC	***6EB3-M***		***X***	***X***	***X***	
	EA, EB, EC	***6EC2***			***X***	***X***	
	EA, EB, EC	***6EC3***			***X***	***X***	(C)
	RV	2RV3-O		X	X	X	
	RV	2RV3-T		X	X	X	
	CCS	***2N02***				***X***	(N)

Certain material found on this page formerly appeared on First Revised Page 180.

6. Switched Access Service (Cont'd)

6.4 Service Provisioning (Cont'd)

6.4.3 Interface Groups (Cont'd)

(G) Available Premises Interface Codes (Cont'd)

Interface Group	Company Switch Supervisory Signaling	Premises Interface Code	Feature Group A	B	C	D
2	LO, GO	4SF2	X			
	LO	4LS2	X			
	GO	4GS2	X			
	LO, GO	6EX2-B	X			
	RV, EA, EB, EC	4SF2		X	X	X
	RV, EA, EB, EC	4DX2		X	X	X
	RV, EA, EB, EC	6EA2-E		X	X	X
	RV, EA, EB, EC	6EA2-M		X	X	X
	RV, EA, EB, EC	8EB2-E		X	X	X
	RV, EA, EB, EC	8EB2-M		X	X	X
	EA, EB, EC	8EC2-M			X	X
	RV	4RV2-O		X	X	X
	RV	4RV2-T		X	X	X
	CCS	4N02				X

(D)

(D)

6. Switched Access Service (Cont'd)

6.4 ***Service Provisioning*** (Cont'd) (C)

6.4.3 Interface Groups (Cont'd) (T)

(G) Available Premises Interface Codes (Cont'd) (T)

Interface Group	Company Switch Supervisory Signaling	Premises Interface Code	Feature Group A	B	C	D	
6	LO, GO	4DS9-15	X				
	LO, GO	4DS9-15L	X				
	RV, EA, EB, EC	4DS9-15		X	X	X	
	RV, EA, EB, EC	4DS9-15L		X	X	X	
	CCS	***4DS9-15***				***X***	(N)
	CCS	***4DS9-1SN***				***X***	
	CCS	***4DS9-1BN***				***X***	
	CCS	***4DS9-15B***				***X***	(N)
							(D)
							(D)
9	LO, GO	4DS6-44	X				
	LO, GO	4DS6-44L	X				
	RV, EA, EB, EC	4DS6-44		X	X	X	
	RV, EA, EB, EC	4DS6-44L		X	X	X	
	CCS	***4DS6-44***				***X***	(N)

Certain material found on this page formerly appeared on First Revised Page 182.

6. Switched Access Service (Cont'd)

6.5 Obligations of the Company

In addition to the obligations of the Company set forth in 2. preceding, the Company has certain other obligations pertaining only to the provision of Switched Access Service. These obligations are as follows:

6.5.1 Network Management

The Company will administer its network to insure the provision of acceptable service levels to all telecommunications users of the Company's network services. Generally, service levels are considered acceptable only when both end users and customers are able to establish connections with little or no delay encountered within the Company network. The Company maintains the right to apply protective controls, i.e., those actions, such as call gapping, which selectively cancel the completion of traffic, over any traffic carried over its network, including that associated with a customer's Switched Access Service. Generally, such protective measures would only be taken as a result of occurrences such as failure or overload of Company or customer facilities, natural disasters, mass calling or national security demands. In the event that the protective controls applied by the Company result in the complete loss of service by the customer, the customer will be granted a Credit Allowance for Service Interruption as set forth in 2.4.4(B)(3) preceding.

6.5.2 Design and Traffic Routing of Switched Access Service

When ordering line side or trunk side Switched Access Services, the customer must, at a minimum, specify the Switched Transport facilities to be used (i.e., Entrance Facility, Direct-Trunked Transport and Tandem-Switched Transport). When specifying the Switched Transport facilities to be used, the customer must indicate if the facilities are new or existing. The customer is also required to specify whether the service should be provided by originating only, terminating only or two-way trunk groups.

For Feature Groups A and B, the line or trunk directionality and traffic routing of the Switched Access Service between the customer’s premises and the entry switch are determined by the customer’s order for service. The Company will compare the customer’s request with its own traffic routing plan and available facilities and equipment to determine whether the customer’s request can be met. The Company is responsible for selection of facilities from the interface to any switching point and to the end offices where capacity is ordered.

6. Switched Access Service (Cont'd)

6.5 Obligations of the Company (Cont'd)

6.5.2 Design and Traffic Routing of Switched Access (Cont'd)

Except for Feature Group B, the Company will also decide whether trunk side access will be provided through the use of two-wire or four-wire trunk terminating equipment.

Selection of facilities and equipment and traffic routing of the service are based on standard engineering methods, available facilities and equipment, and the Company traffic routing plans. If the customer desires routing or directionality different from that determined by the Company, the Company will work cooperatively with the customer in determining (1) whether the service is to be routed directly to an end office or through an access tandem switch and (2) the directionality of the service. Additionally, for Feature Group B, the customer may order the optional feature Customer Specification of Switched Transport Termination.

In the event a customer converts from FGA Service to FGB Service, the Company will (where the capability exists) route calls from the FGA circuits to the FGB circuits for a 1-year period from the date FGA Service is terminated. No additional charge will apply for this call-forwarding function.

6.5.3 Provision of Service Performance Data

Subject to availability, end-to-end service performance data available to the Company through its own service evaluation routines, may also be made available to the customer based on previously arranged intervals and format. These data provide information on overall end-to-end call completion and non-completion performance, e.g., customer equipment blockage, failure results and transmission performance. These data do not include service performance data which are provided under other Tariff Sections, e.g., Testing Service Results. The charges for providing such data will be determined on an individual case basis.

6. Switched Access Service (Cont'd)

6.5 Obligations of the Company (Cont'd)

6.5.4 Trunk Group Measurements Reports

Subject to availability, the Company will make available trunk group data in the form of usage in CCS, peg count and overflow, to the customer based on previously agreed to intervals. The charges for providing such data will be determined on an individual case basis.

6.5.5 Determination of Number of Transmission Paths

When ordering Switched Access Services in line quantities for Feature Group A or trunk quantities for Feature Groups B, C or D, the customer shall specify the number of transmission paths in lines or trunks based on their expected originating and terminating traffic.

6. Switched Access Service (Cont'd)

6.5 Obligations of the Company (Cont'd)

6.5.5 Determination of Number of Transmission Paths (Cont'd)

For analog entry switches, a termination will be provided for each Feature Group line or trunk requested. For digital entry switches an equivalent termination will be provided for each Feature Group line or trunk requested.

6.5.6 Design Blocking Probability

The Company will design and monitor the capacity of the Switched Access Services to be provided to meet the blocking probability criteria as set forth in (A) through (D) following:

(A) For Feature Groups A and B no design blocking criteria apply.

(B) For Feature Group C, the design blocking objective will be no greater than 1% (.01) between the Point of Termination at the customer's premises and the first point of switching when traffic is directly routed without an alternate route. Standard traffic engineering methods will be used by the Company to determine the number of transmission paths required to achieve this level of blocking.

(C) For Feature Group D, the design blocking objective for the final group will be no greater than 1% (.01) between the Point of Termination at the customer's premises and the end office switch, whether the traffic is directly routed without an alternate route or routed via an access tandem. Standard traffic engineering methods will be used by the Company to determine the number of transmission paths required to achieve this level of blocking. The Company will determine which traffic tables are used based on trunk group type and switch technology. The customer will be provided with these tables upon request.

6. Switched Access Service (Cont'd)

6.5 Obligations of the Company (Cont'd))

6.5.6 Design Blocking Probability (Cont'd)

(D) The Company will perform routine measurement functions for the capacity ordered, whether ordered in lines or trunks, to assure that an adequate number of transmission paths are in service. The Company will recommend that additional capacity (i.e., lines or trunks) be ordered by the customer when additional paths are required to reduce the measured blocking level. For the Feature Group C or D capacity ordered, the design blocking objective is assumed to have been met if the routine measurements show that the measured blocking does not exceed the thresholds listed in the following tables.

(1) For transmission paths carrying only first routed traffic directly between an end office and a customer's premises without an alternate route, and for paths carrying only overflow traffic, the measured blocking thresholds are as follows:

Number of Transmission Paths Per Trunk Group	Measured Blocking Thresholds in the Time Consistent Busy Hour for the Number of Measurements Per Trunk Group			
	15-20 Measurements	11-14 Measurements	7-10 Measurements	3-6 Measurements
2	.070	.080	.090	.140
3	.050	.060	.070	.090
4	.050	.060	.070	.080
5-6	.040	.050	.060	.070
7 or more	.030	.035	.040	.060

6. Switched Access Service (Cont'd)

6.5 Obligations of the Company (Cont'd))

6.5.6 Design Blocking Probability (Cont'd)

(D) (Cont'd)

(2) For transmission paths carrying first routed traffic between an end office and a customer's premises via an access tandem, the measured blocking thresholds are as follows:

Number of Transmission Paths Per Trunk Group	Measured Blocking Thresholds in the Time Consistent Busy Hour for the Number of Measurements Per Trunk Group			
	15-20 Measurements	11-14 Measurements	7-10 Measurements	3-6 Measurements
2	.045	.055	.060	.095
3	.035	.040	.045	.060
4	.035	.040	.045	.055
5-6	.025	.035	.040	.045
7 or more	.020	.025	.030	.040

6.6 Obligations of the Customer

In addition to the Obligations of the Customer set forth in 2. preceding, the customer has certain specific obligations pertaining to the use of Switched Access Service. These obligations are as follows:

6. Switched Access Service (Cont'd)

6.6 Obligations of the Customer (Cont'd)

6.6.1 Report Requirements

Customers are responsible for providing the following reports to the Company, when applicable.

(A) Jurisdictional Reports

When a customer orders Switched Access Service both interstate and intrastate use, the customer is responsible for providing reports as set forth in 2.3.14 preceding. Charges will be apportioned in accordance with those reports. The method to be used for determining the interstate charges is set forth in 2.3.15 preceding.

(B) Code Screening Reports

When a customer orders service class routing, trunk access limitation or call gapping arrangements, it must report the number of trunks and/or the appropriate codes to be instituted in each end office or access tandem switch, for each of the arrangements ordered.

6. Switched Access Service (Cont'd)

6.6 Obligations of the Customer (Cont'd)

6.6.1 Report Requirements (Cont'd)

(C) 900 Access Service NXX Codes

All 900 NXX Code assignments and administration shall be in accordance with the North American Numbering Plan (NANP).

When ordering 900 Access Service, NXX Codes to be activated and NXX Codes to be deactivated must be provided to the Company at least 30 calendar days prior to the effective date of the change. Customer assigned codes, for which an order has not been received, will be blocked. When 900 Access Service intrastate traffic is terminated on a switched access line and not on a dedicated access line, the customer must notify the Company of all local exchange telephone numbers to which 900 Access Service traffic is designated so that the Company can balance the end office in accordance with standard Company engineering practices for heavy volume lines.

(D) Interim 500 Access Service NXX Codes

All 500 NXX Code assignments and administration shall be in accordance with the North American Numbering Plan (NANP).

When ordering Interim 500 Access Service, NXX Codes to be activated and NXX Codes to be deactivated must be provided to the Company at least 30 calendar days prior to the effective date of the change. Customer assigned codes, for which an order has not been received, will be blocked. When Interim 500 Access Service intrastate traffic is terminated on a switched access line and not on a dedicated access line, the customer must notify the Company of all local exchange telephone numbers to which Interim 500 Access Service traffic is designated so that the Company can balance the end office in accordance with standard Company engineering practices for heavy volume lines.

6. Switched Access Service (Cont'd)

6.6 Obligations of the Customer (Cont'd)

6.6.2 Supervisory Signaling

The customer's facilities shall provide the necessary on-hook, off-hook, answer and disconnect supervision.

6.6.3 Trunk Group Measurement Reports

With the agreement of the customer, trunk group data in the form of usage in CCS, peg count and overflow for its end of all access trunk groups, where technologically feasible, will be made available to the Company. These data will be used to monitor trunk group utilization and service performance and will be based on previously arranged intervals and format.

6.6.4 Design of Switched Access Services

When a customer orders Switched Access Service on a per line or per trunk basis, it is the customer's responsibility to assure that sufficient Access Services have been ordered to handle its traffic.

6.7 Rate Regulations

This Section contains the specific regulations governing the rates and charges that apply for Switched Access Service.

6.7.1 Description and Application of Rates and Charges

There are three (3) types of rates and charges that apply to Switched Access Service. These are monthly recurring rates (including fixed and per mile), nonrecurring charges and usage rates. These rates and charges are applied differently to the various rate elements as set forth in (D) following.

(A) Monthly Rates

Monthly rates are flat recurring rates that apply each month or fraction thereof that a specific rate element is provided regardless of the amount of usage. Monthly rates may be either distance sensitive (per mile) or non-distance sensitive (fixed). For billing purposes, each month is considered to have thirty (30) days.

6. Switched Access Service (Cont'd)

6.7 Rate Regulations (Cont'd)

6.7.1 Description and Application of Rates and Charges (Cont'd)

(B) Usage Rates

Usage rates are rates that apply only when a specific rate element is used. These are applied on a per access minute basis as described in 6.7.1(D) following, or on a per query basis as described in 6.2.5 preceding. Usage rates may be either distance sensitive (per mile) or non-distance sensitive (fixed). Access Minute Charges are accumulated over a monthly period.

(C) Nonrecurring Charges

Nonrecurring charges are one-time charges that apply for a specific work activity (i.e., installation or change to existing service) and are developed at full cost recovery on a labor hours per labor time basis. When service is jointly provided under the Single Bill Method of Multiple Company (Interconnection Point) Billing, the nonrecurring charges reflect the average weighted costs of the exchange telephone companies involved and are applicable to all nonrecurring functions in the provision of Switched Access Service. Under the Multiple Bill Method, the nonrecurring charges reflect only the Company's costs and are applicable only when the nonrecurring function occurs within its territory. The types of nonrecurring charges that apply for Switched Access Service are: installation of service, installation of optional features, service rearrangements, Interim 500 Access Service and 900 Access Service.

(1) Installation of Service

Nonrecurring charges apply to each Switched Access Service installed. For FGA, the Per Line Installation Charge is applicable. For FGB, FGC, FGD, Interim 500 Access, TFC and 900, the Per Trunk Installation Charge is applicable on a per end office or tandem basis. The nonrecurring charge for the installation of Entrance Facilities and CCS/SS7 Interconnection Services is applied for each Point of Termination.

(2) Installation of Optional Features

If a separate nonrecurring charge applies for the installation of an optional feature available with Switched Access Service, the charge applies whether the feature is installed coincident with the initial installation of service or at any time subsequent to the initial installation of service.

6. Switched Access Service (Cont'd)

6.7 Rate Regulations (Cont'd)

6.7.1 Description and Application of Rates and Charges (Cont'd)

(C) Nonrecurring Charges (Cont'd)

(3) Service Rearrangements

Service rearrangement are changes to existing services installed which do not result in either a change in the minimum period requirements as set forth in 5.2.5 preceding or a change in the physical location of the Point of Termination at the customer's premises or the customer's end user's premises. Changes which result in the establishment of new minimum period obligations are treated as disconnects and starts. Changes in the physical location of the Point of Termination are treated as moves and are described for as set forth in 6.7.7 following.

The charge to the customer for the service rearrangement is dependent on whether the change is administrative only in nature or involves an actual physical change to the service.

Administrative changes will be made without charge(s) to the customer. Such changes require the continued provision and billing of the Access Service to the same entity (i.e., customer remains responsible for all outstanding indebtedness for the Access Service). Administrative changes are as follows:

- Change of customer name (i.e., the customer of record does not change but rather the customer of record changes its name--e.g., AT&T Long Lines to AT&T Communications),

- Change of customer or customer's end user premises address when the change of address is not a result of a physical relocation of equipment,

6. Switched Access Service (Cont'd)

6.7 Rate Regulations (Cont'd)

6.7.1 Description and Application of Rates and Charges (Cont'd)

(C) Nonrecurring Charges (Cont'd)

(3) Service Rearrangements (Cont'd)

- Change in billing data (name, address or contact name or telephone number),
- Change of agency authorization,
- Change of customer circuit identification,
- Change of billing account number,
- Change of customer test line number,
- Change of customer or customer's end user contact name or telephone number,
- Change of jurisdiction

All other service rearrangements will be charged for as follows:

- If the change involves the addition of or a modification to an optional feature which has a separate nonrecurring charge, that nonrecurring charge will apply.

- Rearrangements to convert FGD trunks from multifrequency address signaling to SS7 signaling will be provided at no charge. Rearrangements to convert FGD trunks from SS7 signaling to multifrequency address signaling will incur nonrecurring charge(s) as specified in 6.8.3(A) following. Such conversions will be scheduled on a project basis by the Company in cooperation with the customer. (C) (C)

- When the Service Switching Point (SSP) is located at the Company's access tandem, end office and tandem trunk rearrangements will be provided at the charges set forth in 6.8.3(B) following when all of the following conditions apply:

6. Switched Access Service (Cont'd)

6.7 Rate Regulations (Cont'd)

6.7.1 Description and Application of Rates and Charges (Cont'd)

(C) Nonrecurring Charges (Cont'd)

(3) Service Rearrangements (Cont'd)

(a) End office and tandem trunk rearrangements will be provided only on Feature Group D trunks located at the end office switch.

(b) The customer must disconnect one (1) trunk at the end office or access tandem for each trunk installed at the SSP-equipped tandem. The number of trunks being connected at the SSP-equipped tandem cannot exceed the number of trunks disconnected.

(c) The customer must place the order to connect at the SSP-equipped tandem at the same time the order is placed to disconnect from the end office or tandem. The due date of the disconnection order cannot be more than six (6) months past the due date of the order to install at the SSP-equipped tandem.

6. Switched Access Service (Cont'd)

6.7 Rate Regulations (Cont'd)

6.7.1 Description and Application of Rates and Charges (Cont'd)

(C) Nonrecurring Charges (Cont'd)

(3) Service Rearrangements (Cont'd)

- When the SSP is not located at the Company's point of switching and traffic routing changes for end office to tandem trunking are required, a charge equal to one-half (1/2) the Switched Transport nonrecurring (i.e., installation) charge will apply on a per end office basis.

- The nonrecurring charges associated with rerouting trunks from tandem to end office or from end office to tandem transport will not apply when the following conditions are met:

  (a) The customer must maintain the same customer premises location. Requests to add or change optional features will be subject to the charges applicable to the features.

  (b) Direct routed end office trunks must subtend the tandem from which the service is being rearranged.

  (c) One (1) trunk at the end office or tandem must be disconnected for each rerouted tandem or end office trunk installed with the following exception. If the customer demonstrates that industry accepted engineering standards require the installation of additional trunks, the nonrecurring charges for such additional trunks will not apply.

6. Switched Access Service (Cont'd)

6.7 Rate Regulations (Cont'd)

6.7.1 Description and Application of Rates and Charges (Cont'd)

(C) Nonrecurring Charges (Cont'd)

(3) Service Rearrangements (Cont'd)

(d) The order to disconnect from the tandem or end office must be placed at the same time as the order to connect at the tandem or end office. The due date for the disconnect order may not be more than ninety (90) days after the due date for the order to install the tandem or end office trunk.

These nonrecurring charges include installation of new facilities between the Company serving wire center and the customer's designated premises when such facilities are required to provision rerouted trunks.

- The nonrecurring charges associated with upgrades in capacity (i.e., multiple DS0s converting to DS1s or multiple DS1s converting to DS3s ***or STS1s, or DS3s converting to STS1s***) will not apply when the customer maintains the same customer premises location. Requests to add or change optional features will be subject to the nonrecurring charges associated with the features requested. (C)

- A nonrecurring service upgrade charge, as set forth in Section 6.8.2 following, will apply per DS1**,** DS3 ***or STS1*** upgraded when converting existing high capacity services to OptiPoint service. The charge does not apply when OptiPoint is ordered as new service and no existing high capacity services are being relocated to the OptiPoint service. For orders for new services submitted after December 4, 2000, the nonrecurring service upgrade charge will apply for each DS1**,** DS3 ***or STS1*** channel connected to new OptiPoint service when existing DS1**,** DS3 ***or STS1*** facilities between the same points of termination as the new OptiPoint service are disconnected within 30 days of the order for new services. (C) (C) (C)

- Service Rearrangement Charges will not apply when a customer converts trunks from Tandem-Switched Transport to Direct-Trunked Transport, or orders the disconnection of over-provisioned trunks, prior to January 1, 1999.

6. Switched Access Service (Cont'd)

6.7 Rate Regulations (Cont'd)

6.7.1 Description and Application of Rates and Charges (Cont'd)

(C) Nonrecurring Charges (Cont'd)

(3) Service Rearrangements (Cont'd)

- Service rearrangements to redirect traffic from direct routed to tandem routed for performance of the TFC data base query required for TFC Access Service, where the TFC query function is initially available only at the tandem, will be assessed the End Office to Tandem Rearrangement Charge set forth in 6.8.3(B) following. When the TFC data base query function becomes available for TFC Access Service at end offices subtending the tandem to which customers have redirected TFC traffic, customers will be allowed to rearrange TFC traffic from tandem routed to direct routed at no charge provided that the same customer premises is maintained.

- For service rearrangements involving OC3, OC12 or OC48 switched access services (e.g., OptiPoint Service), a charge equal to one half the Optical Service Charge set forth in 6.8.7 will apply ***for each node arranged***. (T)

- For all other charges, including the addition of, or modifications to, optional features without separate nonrecurring charges, a charge equal to one-half (1/2) the Switched Transport nonrecurring (i.e., installation) charge will apply. When an optional feature is not required on each transmission path, but rather for an entire transmission path group, an end office or an access tandem switch, only one (1) such charge will apply (i.e., it will not apply per transmission path).

6. Switched Access Service (Cont'd)

6.7 Rate Regulations (Cont'd)

6.7.1 Description and Application of Rates and Charges (Cont'd)

(C) Nonrecurring Charges (Cont'd)

(4) 900 Access Service

A nonrecurring charge as specified in Section 6.8.5 of the Embarq (T)
Local Operating Companies Tariff F.C.C. No. 1 applies each time (T)
a change is made which involves the addition or deletion of 900 NXX codes to be routed to the customer. The charge is assessed per 900 NXX code added or deleted for each Company end office switch or access tandem in which Translation Charges are required. This charge applies to the initial loading of one (1) or more 900 NXX codes required to establish service for the customer and to any subsequent charges (i.e., additions or deletions) to those codes. There is also an Assembly of Route Pattern Nonrecurring Charge that applies once for each Company end office, but only on the customer's initial request to the Company for 900 Access Service in each state, LATA, access tandem, or end office.

(5) Interim 500 Access Service

A nonrecurring charge as specified in Section 6.8.6 of the Embarq (T)
Local Operating Companies Tariff F.C.C. No. 1 applies each time (T)
a change is made which involves the addition or deletion of 500 NXX codes to be routed to the customer. The charge is assessed per 500 NXX code added or deleted for each Company end office switch or access tandem in which translation changes are required. This charge applies to the initial loading of one or more 500 NXX codes required to establish service for the customer and to any subsequent changes (i.e., additions or deletions) to those codes. There is also an Assembly of Route Pattern nonrecurring charge that applies once for each Company end office, but only on the customer’s initial request to the Company for Interim 500 Access Service in each state, LATA, access tandem, or end office.

6. Switched Access Service (Cont'd)

6.7 Rate Regulations (Cont'd)

6.7.1 Description and Application of Rates and Charges (Cont'd)

(D) Application of Rates

Local Switching rates are applied either as premium rates or transitional rates. (C)

The specific application of premium and transitional rates for a specific customer is dependent upon the Feature Group and the availability of equal access capabilities in the end office to which the service is provided.

The following rules provide the basis for applying the premium and transitional rates.

(1) ***Reserved For Future Use*** (C)

(D)

(D)

(2) Premium rates apply to all FGC and FGD access minutes, to all FGA and FGB access minutes that originate from or terminate at end offices equipped with equal access (i.e., FGD) capabilities, and to all access minutes that originate or terminate at end offices not equipped with equal access capabilities when the service is provided to customers which furnish intrastate MTS/WATS. Premium rates also apply to all Interim 500, TFC and 900 Access Service minutes that originate from equal access end offices via FGD, or Interim 500, TFC and 900 Access Service minutes that originate from non equal access end offices for customers who subscribe to FGC.

(3) Premium rates, including Local Switching - LS2, apply to all FGB, FGC and FGD usage at an end office for any customer which provides MTS and WATS Services and subscribes to FGB and either FGC or FGD originating and/or terminating at those end offices.

6. Switched Access Service (Cont'd)

6.7 Rate Regulations (Cont'd)

6.7.1 Description and Application of Rates and Charges (Cont'd)

(D) Application of Rates (Cont'd)

(4) ***Reserved For Future Use*** (C)
(D)
(D)

(5) Transitional rates (i.e., disconnected access minutes rates) apply to all FGA or FGB access minutes (measured or assumed) that originate from or terminate at non equal access end offices, except for FGB access minutes generated by providers of MTS and WATS Services. Transitional rates also apply to all non-AT&T Interim 500 Access, TFC Access and 900 Access Service minutes that originate from non equal access end offices.

(6) When FGA or FGB Switched Access Service provided to an entry switch (i.e., dial tone office for FGA and access tandem for FGB) has usage originating from and/or terminating at both end offices that have been converted to equal access and end offices that have not been converted, the premium and transitional rates for Switched Access Service (including Carrier Common Line) will apply in the following manner:

(a) All access minutes that originate from or terminate at the equal access end office(s) will be billed at premium rates. Access minutes that originate from or terminate at end offices not equipped with equal access capabilities, hereinafter referred to as non-premium access minutes, will be billed at transitional rates.

(b) The number of access minutes to be rated as premium access minutes is determined as follows:

(1) Where measurement capability exists, and end office specific usage data is available, premium rates will apply to all access minutes originating from or terminating at equal access end offices.

6. Switched Access Service (Cont'd)

6.7 Rate Regulations (Cont'd)

6.7.1 Description and Application of Rates and Charges (Cont'd)

(D) Application of Rates (Cont'd)

(6) (Cont'd)

(b) (Cont'd)

(2) Where measurement capability does not exist and/or end office specific usage data is not available, originating and/or terminating usage will be apportioned between premium and non-premium usage as described following. The usage to be apportioned will be the recorded usage or the assumed usage as set forth in 6.7.8 following. Such apportionment will be based on the ratio of the number of subscriber lines in the access area (i.e., local calling area or end offices subtending the access tandem, as appropriate) of the entry switch that are served by equal access end offices to the total number of subscriber lines in that access area. The ratio thus developed is applied to the total measured or assumed originating FGA usage, terminating FGA usage, originating FGB usage or terminating FGB usage, as applicable, to determine the usage to be billed at premium rates, unless adjusted as set forth in (3) following.

6. Switched Access Service (Cont'd)

6.7 Rate Regulations (Cont'd)

6.7.1 Description and Application of Rates and Charges (Cont'd)

(D) Application of Rates (Cont'd)

(6) (Cont'd)

(b) (Cont'd)

(2) (Cont'd)

The ratios used to determine the premium usage will be updated on a quarterly basis. The ratios to be used for the succeeding quarter will be provided to the customer with the last bill rendered in the quarter or mailed separately within five (5) working days after the first day of the new quarter (i.e., January, April, July and October).

For purposes of administering this provision: (a) subscriber lines are defined as exchange service lines, Centrex lines and Centrex-type lines provided by the Company under its General Subscriber Services Tariff; (b) the access area is defined as the local calling area of the dial tone office for originating and terminating FGA and all end offices subtending the access tandem for originating and terminating FGB; and (c) the local calling area of the dial tone office is as defined in the Company's General Subscriber Services Tariff.

6. Switched Access Service (Cont'd)

6.7 Rate Regulations (Cont'd)

6.7.1 Description and Application of Rates and Charges (Cont'd)

(D) Application of Rates (Cont'd)

(6) (Cont'd)

(b) (Cont'd)

(3) Where FGD Switched Access Service is provided to a customer in an end office(s) where FGA or FGB premium access minutes have been determined in accordance with (2) preceding, such premium access minutes will be adjusted in the following manner. For each FGD access minute originating from or terminating at that end office, the originating or terminating FGA or FGB premium access minutes determined as set forth in (2) preceding will be reduced on a one (1) for one (1) basis, but in no event shall the reduction exceed the total number of FGA or FGB premium access minutes originating from or terminating at that end office. The customer will be billed for the revised number of premium access minutes.

(c) The Company will provide written notification to all access customers of record within a particular local calling area that an end office in that local calling area is scheduled to be converted to an equal access end office. This notification will be sent, via Certified U.S. Mail, to each customer of record in the local calling area where the conversion is scheduled to occur, at least six (6) months in advance of the conversion date.

6. Switched Access Service (Cont'd)

6.7 Rate Regulations (Cont'd)

6.7.1 Description and Application of Rates and Charges (Cont'd)

(D) Application of Rates (Cont'd)

(6) (Cont'd)

(c) (Cont'd)

The customer will have the choice of converting existing services to equal access (i.e., Feature Group D) at no charge pursuant to the conditions set forth in 6.7.6 following, or retaining the existing services. Premium rates will apply to the total access minutes beginning on the actual conversion date, whether the customer chooses to convert to FGD or retain existing services.

(D)

(D)

6. Switched Access Service (Cont'd)

6.7 Rate Regulations (Cont'd)

6.7.1 Description and Application of Rates and Charges (Cont'd)

(D) Application of Rates (Cont'd)

This Page is Reserved For Future Use (C)

(D)

(D)

6. Switched Access Service (Cont'd)

6.7 Rate Regulations (Cont'd)

6.7.1 Description and Application of Rates and Charges (Cont'd)

(D) Application of Rates (Cont'd)

This Page is Reserved For Future Use (C)

(D)

(D)

6. Switched Access Service (Cont'd)

6.7 Rate Regulations (Cont'd)

6.7.2 Minimum Periods

The minimum service period for all switched access services is one month, with the exception of OptiPoint Services and Feature Group D. Feature Group D is provided for a minimum period of three months.

6.7.3 Reserved For Future Use

6.7.4 Minimum Monthly Charge

Switched Access Service is subject to a minimum monthly charge. The minimum charge applies for the total capacity provided. The minimum monthly charge consists of the following elements:

For usage rated Switched Access Services, the minimum monthly charge for ***the Tandem-Switched*** Transport ***and*** Local ***Switching rate*** elements is the sum of the charges set forth ***in 6.8.2(C) and 6.8.3 following*** for the measured or assumed usage for the month. For flat rated Switched Access Services, the minimum monthly charge for the Entrance Facility and Direct-Trunked Transport rate elements is the applicable monthly rate for the service. (C) | (C)

6.7.5 Reserved For Future Use

6. Switched Access Service (Cont'd)

6.7 Rate Regulations (Cont'd)

6.7.6 Change of Feature Group Type

Changes from one type of Feature Group to another will be treated as a discontinuance of one type of service and a start of another. Nonrecurring charges will apply, with two (2) exceptions.

(1) When a customer upgrades a Feature Group A or B Service to a Feature Group D Service, the nonrecurring charges will not apply if the following conditions are met:

(a) The same customer premises is maintained, and

(b) The orders for the disconnect of the FGA or FGB Service and the start of the FGD Service are placed with the Company at the same time, and

(c) The customer requests the same effective date for both the disconnect of service and start of service orders, or

(d) The customer requests the FGA or FGB Service be disconnected no more than ninety (90) days after the start of the FGD Service.

(2) When a FGC Service is upgraded to a FGD Service, the nonrecurring charge will not apply. Because FGC is no longer available in an end office once the end office is equipped with equal access capabilities, (i.e., FGD), such upgrades will be performed by the Company without the customer being required to place an order for the change.

At the time the customer upgrades from FGA, FGB or FGC to FGD, the customer may also change the facility used to provide the upgraded service. This change will be made at no additional charge and may include a change in the connection type (e.g., Voice Grade to DS1) and/or a change in the facility type (e.g., Direct-Trunked Transport to Tandem-Switched Transport).

When the effective dates for the disconnect and start of service are the same, minimum period obligations will not change (i.e., the time elapsed in the existing minimum period obligations will be credited to the minimum period obligations for FGD). When the effective dates for the disconnect and start of service are different, new minimum period obligations will be established for the FGD Service. For all other changes from one type of Feature Group to another, new minimum period obligations will also be established.

6. Switched Access Service (Cont'd)

6.7 Rate Regulations (Cont'd)

6.7.7 Moves

A move involves a change in the physical location of one (1) of the following:

- The Point of Termination at the customer's premises, or
- The customer's premises.

The charges for the move are dependent on whether the move is to a new location within the same building or to a different building.

(A) Moves Within the Same Building

When the move is to a new location within the same building, the charge for the move will be an amount equal to one-half (1/2) of the nonrecurring (i.e., installation) charge for the capacity affected. There will be no change in the minimum period requirements.

(B) Moves to a Different Building

Moves to a different building will be treated as a discontinuance and start of service and all associated nonrecurring charges will apply. New minimum period requirements will be established for the new service. The customer will also remain responsible for satisfying all outstanding minimum period charges for the discontinued service.

When moves to a different building occur simultaneously with rerouting trunks from tandem to end office or from end office to tandem transport, a charge equal to one-half (1/2) of the associated Installation Charges will apply.

6.7.8 Measuring Access Minutes

Customer traffic to end offices will be measured by the Company at end office switches or access tandem switches. Originating and terminating calls will be measured by the Company to determine the basis for computing chargeable access minutes. For terminating calls over FGA and FGB, FGC to TFC, and FGD, and for originating calls over FGA, FGB and FGD, the measured minutes are the chargeable access minutes. For originating calls over FGC, chargeable originating access minutes are derived from measured conversation minutes and through the use of Company factors. Chargeable terminating access minutes for FGC are derived on an individual entity basis from measured originating ***conversation minutes through the application of a terminating to originating factor (T/O). The Telephone Company will be responsible for determining the T/O factor, and will provide supporting detail to the customer on a quarterly basis upon request.*** (T) | (T)

6. Switched Access Service (Cont'd)

6.7 Rate Regulations (Cont'd)

6.7.8 Measuring Access Minutes (Cont'd)

When assumed minutes are used, the assumed minutes are the chargeable access minutes.

FGA access minutes or fractions thereof, the exact value of the fraction being a function of the switch technology where the measurement is made, are accumulated over the billing period for each line or hunt group, and are then rounded up to the nearest access minute for each line or hunt group.

FGB, FGC and FGD access minutes or fractions thereof, the exact value of the fraction being a function of the switch technology where the measurement is made, are accumulated over the billing period for each end office, and are then rounded up to the nearest access minute for each end office.

Assumed minutes are used for FGA and FGB services which originate or terminate in end offices not equipped with measurement capabilities.

Where originating and/or terminating traffic measurement capability does not exist, the number of access minutes per FGA line or FGB trunk will be assumed as follows:

(A) A single, monthly surrogate of assumed minutes per two-way line or trunk per month shall apply as set forth in (D) following. For FGA lines, the terminating assumed usage will be 47% of the two-way surrogate and the originating assumed usage will be 53% of the two-way surrogate. For FGB trunks, the originating and terminating assumed usage will each be 50% of the two-way surrogate.

6. Switched Access Service (Cont'd)

6.7 Rate Regulations (Cont'd)

6.7.8 Measuring Access Minutes (Cont'd)

(B) When measurement capability does not exist for a one way line or trunk, a single, monthly surrogate of assumed minutes per one way line or trunk per month shall apply as set forth in (D) following.

(C) When measurement capability does not exist in one direction for a two way line or trunk (e.g., recording for terminating usage only), the number of access minutes per line or trunk per month will be the assumed surrogate for a two way line or trunk or the recorded usage for the single direction, whichever is greater.

(D) The assumed minutes of use surrogates are as follows:

	Per Two Way Line or Trunk		Per One Way Line or Trunk			
			Originating Only		Terminating Only	
	FGA	FGB	FGA	FGB	FGA	FGB
South Carolina	*	*	*	*	*	*

* All existing services are measured or there are no customers for these services at present. If an Access Service Request is received in an office where measurement capability does not exist, a traffic study will be completed to develop a surrogate, and such surrogate will be tariffed.

(E) Feature Group A Usage Measurement

For originating calls over FGA, usage measurement begins when the originating FGA entry switch receives an off-hook supervisory signal forwarded from the customer's Point of Termination, indicating that the customer has received the call.

The measurement of originating call usage over FGA ends when the originating FGA entry switch receives an on-hook supervisory signal from either the originating end user's end office, indicating the originating end user has disconnected, or the customer's Point of Termination, whichever is recognized first by the entry switch.

6. Switched Access Service (Cont'd)

6.7 Rate Regulations (Cont'd)

6.7.8 Measuring Access Minutes (Cont'd)

(E) Feature Group A Usage Measurement (Cont'd)

For terminating calls over FGA, usage measurement begins when the terminating FGA entry switch receives an off-hook supervisory signal from the terminating end user's end office, indicating the terminating end user has answered. The measurement of terminating call usage over FGA ends when the terminating FGA entry switch receives an on-hook supervisory signal from either the terminating end user's end office, indicating the terminating end user has disconnected, or the customer's Point of Termination, whichever is recognized first by the entry switch.

(F) Feature Group B Usage Measurement

For originating calls over FGB, usage measurement begins when the originating FGB entry switch receives answer supervision forwarded from the customer's Point of Termination, indicating the customer's equipment has answered.

The measurement of originating call usage over FGB ends when the originating FGB entry switch receives disconnect supervision form either the originating end user's end office, indicating the originating end user has disconnected, or the customer's Point of Termination, whichever is recognized first by the entry switch.

For terminating calls over FGB, usage measurement begins when the terminating FGB entry switch receives answer supervision from the terminating end user's end office, indicating the terminating end user has answered.

The measurement of terminating call usage over FGB ends when the terminating FGB entry switch receives disconnect supervision from either the terminating end user's end office, indicating the terminating end user has disconnected, or the customer's Point of Termination, whichever is recognized first by the entry switch.

6. Switched Access Service (Cont'd)

6.7 Rate Regulations (Cont'd)

6.7.8 Measuring Access Minutes (Cont'd)

(G) Feature Group C Usage Measurement

For originating calls over FGC, usage measurement begins when the originating FGC entry switch receives answer supervision from the customer's Point of Termination, indicating that the called party has answered.

The measurement of originating call usage over FGC ends when the originating FGC entry switch receives disconnect supervision form either the originating end user's end office, indicating the originating end user has disconnected, or the customer's Point of Termination, whichever is recognized first by the entry switch.

For terminating calls over FGC to services other than TFC, 900 or Directory Assistance, terminating FGC usage may not be directly measured at the terminating entry switch, but may be imputed from originating usage, excluding usage from calls to TFC, 900 or Directory Assistance Services. Actual measured usage will be used where available rather than an imputed value.

For terminating calls over FGC to TFC Service, usage measurement begins when the terminating FGC entry switch receives answer supervision from the terminating end user's end office, indicating the terminating TFC Service end user has answered.

The measurement of terminating calls usage over FGC to TFC Service ends when the terminating FGC entry switch receives an on-hook supervisory signal from the terminating end user's end office, indicating the terminating TFC Service end user has disconnected, or from the customer's Point of Termination, whichever is recognized first by the entry switch.

6. Switched Access Service (Cont'd)

6.7 Rate Regulations (Cont'd)

6.7.8 Measuring Access Minutes (Cont'd)

(H) Feature Group D Usage Measurement

For originating calls over FGD, with multifrequency address signaling, usage measurement begins when the originating FGD entry switch receives the first wink supervisory signal forwarded from the customer's Point of Termination. The measurement of originating call usage over FGD ends when the originating FGD entry switch receives disconnect supervision from either the originating end user's end office, indicating the originating end user has disconnected, or the customer's Point of Termination, whichever is recognized first by the entry switch.

For originating calls over FGD with SS7 signaling, usage measurement begins with the transmission of the initial address message. The measurement of originating FGD call usage ends when the entry switch receives or sends a release message, whichever occurs first.

For terminating calls over FGD, with multifrequency address signaling, the measurement of access minutes begins when the terminating FGD entry switch receives answer supervision from the terminating end user's end office, indicating the terminating end user has answered. The measurement of terminating call usage over FGD ends when the terminating FGD entry switch receives disconnect supervision from either the terminating end user's end office, indicating the terminating end user has disconnected, or the customer's Point of Termination, whichever is recognized first by the entry switch.

For terminating calls over FGD with SS7 signaling, usage measurement begins when the terminating recording switch receives answer supervision from the terminating end user. The Company switch receives answer supervision and send the indication to the customer in the form of an answer message. The measurement of terminating FGD call usage ends when the entry switch receives or sends a release message, whichever occurs first.

6. Switched Access Service (Cont'd)

6.7 Rate Regulations (Cont'd)

6.7.8 Measuring Access Minutes (Cont'd)

(I) Toll Free Code (TFC) Access Service Usage Measurement

Usage measurement from non-equal access and equal access end offices without the customer identification function begins when the originating end office switch receives off-hook supervision forwarded from the customer's Point of Termination, indicating the transmitted digits have been received, except for FGC as stated following.

Usage measurement for FGC begins when the originating end office receives off-hook answer supervision forwarded from the customer's Point of Termination, indicating the called party has answered.

Usage measurement from equal access end offices with the customer identification function begins when the originating end office switch receives the first wink supervisory signal forwarded from the customer's Point of Termination.

In all cases, usage measurement ends when the originating end office receives on-hook disconnect supervision from either the originating end user's end office, indicating the originating end user has disconnected, or the customer's Point of Termination, which ever is recognized first by the end office.

6. Switched Access Service (Cont'd)

6.7 Rate Regulations (Cont'd)

6.7.8 Measuring Access Minutes (Cont'd)

(J) 900 Access Service Usage Measurement

Usage measurement from non-equal access and equal access end offices without the customer identification function begins when the originating end office switch receives off-hook supervision forwarded from the customer's Point of Termination, indicating the transmitted digits have been received, except for FGC as stated following.

Usage measurement for FGC begins when the originating end office receives off-hook answer supervision forwarded from the customer's Point of Termination, indicating the called party has answered.

Usage measurement from equal access end offices with the customer identification function begins when the originating end office switch receives the first wink supervisory signal forwarded from the customer's Point of Termination.

In all cases, usage measurement ends when the originating end office receives on-hook disconnect supervision from either the originating end user's end office, indicating the originating end user's end office, indicating the originating end user has disconnected, or the customer's Point of Termination, which ever is recognized first by the end office.

6. Switched Access Service (Cont'd)

6.7 Rate Regulations (Cont'd)

6.7.8 Measuring Access Minutes (Cont'd)

(K) Interim 500 Access Service Usage Measurement

Usage measurement from non-equal access and equal access end offices without the customer identification function begins when the originating end office switch receives off-hook supervision forwarded from the customer's Point of Termination, indicating the transmitted digits have been received, except for FGC as stated following.

Usage measurement for FGC begins when the originating end office receives off-hook answer supervision forwarded from the customer's Point of Termination, indicating the called party has answered.

Usage measurement from equal access end offices with the customer identification function begins when the originating end office switch receives the first wink supervisory signal forwarded from the customer's Point of Termination.

In all cases, usage measurement ends when the originating end office receives on-hook disconnect supervision from either the originating end user's end office, indicating the originating end user has disconnected, or the customer's Point of Termination, which ever is recognized first by the end office.

6. Switched Access Service (Cont'd)

6.7 Rate Regulations (Cont'd)

6.7.9 Network Blocking Charge for Feature Group D

The customer will be notified by the Company to increase its ***capacity (quantities*** of trunks) when excessive trunk group blocking occurs on groups carrying Feature Group D traffic. Excessive trunk group blocking occurs when the blocking thresholds as described in 6.5.6 preceding are exceeded. If the order for sufficient additional capacity to handle the customer's traffic has not been received by the Company within 15 days of the notification, the Telephone Company will bill the customer, at the rate set forth in 6.8.2***(E)*** following, for each overflow in excess of the chargeable threshold. (C) (Z)

Chargeable Thresholds

For Trunk Groups As Specified in 6.5.***6***(D)(1) (Z)

Trunk Group Size	Allowable Overflows Per Trunk Per Month	
1-2	18	
3-4	19	
5-6	13	
7-**40**	10	(Z)
41-139	9	(Z)
140-500	8	
501 or greater	7	

For Trunk Groups As Specified in 6.5.***6***(D)(2) (Z)

Trunk Group Size	Allowable Overflows Per Trunk Per Month
1-4	10
5-6	8
7-125	6
126 or greater	5

6. Switched Access Service (Cont'd)

6.7 Rate Regulations (Cont'd)

6.7.10 Application of Rates for Extension Service

Feature Group A Switched Access Service is available with extensions, i.e., additional terminations of the service at different building(s) in the same or a different exchange. Feature Group A extensions within the same exchange are charged for under the Company's General Subscriber Services Tariff. Feature Group A extensions in different exchanges are charged for as Special Access Service. The rate elements which apply are: A Voice Grade ***Channel*** (T)
Termination and Channel Mileage, if applicable. All appropriate monthly rates and nonrecurring charges set forth in Section 7.5.3. following will apply. Such extensions are ordered as set forth in Section 5.2 preceding.

6.7.11 Message Unit Credit

Where Local Measured Service (LMS) is available, and for calls from end users to the seven (7) digit local telephone numbers associated with Feature Group A, Switched Access Service will not be charged, therefore, a message unit credit will not be applicable.

6.7.12 Local Information Delivery Services

Calls over Switched Access in the terminating direction to certain community information services will be rated under the applicable rates for Switched Access Service as set forth in 6.8 following. In addition, the charges per call as specified under the Company's General Subscriber Services Tariff, e.g., 976 (DIAL-IT) Network Services, will also apply.

6.7.13 Mileage Measurement

The mileage to be used to determine the rate for Direct-Trunked Transport and Tandem-Switched Transport is calculated based on the airline distance between the end office switch where the call carried by Switched Transport Service originates or terminates and the customer's serving wire center, except as set forth in (A) through (M) following. The V&H Coordinates Method is used to determine mileage. This method is set forth in the National Exchange Carrier Association, Inc. Tariff F.C.C. No. 4 for Wire Center Information (V&H Coordinates).

6. Switched Access Service (Cont'd)

6.7 Rate Regulations (Cont'd)

6.7.13 Mileage Measurement (Cont'd)

If the calculation results in a fraction of a mile, always round up to the next whole mile before applying the rates.

Exceptions to the mileage measurement rules are as follows:

(A) When Switched Transport facilities of different capacities or bandwidths are interconnected by a Multiplexer at a location other than the serving wire center, mileage is determined using the V&H Coordinates Method as set forth following.

(1) When only one (1) Multiplexer is involved, mileage for Direct-Trunked Transport and Tandem-Switched Transport is measured separately from the serving wire center to the Hub where Multiplexing (i.e., facilities interconnection) occurs and then measured from the Hub to the end office where the call is switched to originate or terminate.

(2) When more than one (1) Multiplexer is involved, mileage for Direct-Trunked Transport and Tandem-Switched Transport is measured successively from the serving wire center to the first Hub, from the first Hub to the second Hub, and then from the second Hub to the end office where the call is switched to originate or terminate.

If more that two (2) Hubs are involved, mileage is measured successively between each intervening Hub, with the final measurement being from the last Hub to the end office where the call is switched to originate or terminate.

6. Switched Access Service (Cont'd)

6.7 Rate Regulations (Cont'd)

6.7.13 Mileage Measurement (Cont'd)

(B) When transport is provided to a host/remote arrangement, Tandem-Switched Transmission rates apply from the Host Office to the associated RSMs/RSSs. Mileage for Tandem-Switched Transmission is calculated from the V&H Coordinates of the Host Office and the RSS/RSM where the call originates or terminates. Additional Tandem-Switched Transport or Direct-Trunked Transport rates apply depending on the Transport Service provided from the host/remote rearrangement.

(C) When Switched Transport is provided to a Class 4/5 Switch (i.e., a switch that functions as both an access tandem and end office) for both access tandem routing and end office routing, mileage is calculated using the V&H Coordinates Method.

Direct-Trunked Transport is measured from the serving wire center to the Hub interconnecting the Tandem-Switched Transport and the Direct-Trunked Transport facilities and then measured from the Hub to the end office.

Tandem-Switched Transmission is measured from the Hub interconnecting the Tandem-Switched Transport and the Direct-Trunked Transport facilities to the end office where the call is switched to originate or terminate.

6. Switched Access Service (Cont'd)

6.7 Rate Regulations (Cont'd)

6.7.13 Mileage Measurement (Cont'd)

(D) When Direct-Trunked Transport is provided for line side Switched Access Services (i.e., FGA), both Direct-Trunked Transport and Tandem-Switched Transmission rates apply.

Direct-Trunked Transport applies to both originating and terminating usage, and mileage is calculated using the V&H Coordinates of the customer's serving wire center and the end office switch where the dial tone for the line side Switched Access Service is provided.

Tandem-Switched Transmission applies only to terminating usage, and mileage is calculated using the V&H Coordinates of the dial tone office and the end office where the call is switched to terminate.

(E) Mileage for access minutes in the originating direction over Feature Group A Switched Access Service will be calculated on an airline basis, using the V&H Coordinates Method, between the end office switch where the Feature Group A switching dial tone is provided and the customer's serving wire center for the Switched Access Service provided. (D) | (D)

(F) When trunks are rerouted from an end office to an access tandem as set forth in 6.7.1(C)(3) preceding, the Switched Transport mileage will be calculated on the airline distance between the end office and the serving wire center of the customer's POP associated with that access tandem.

6. Switched Access Service (Cont'd)

6.7 Rate Regulations (Cont'd)

6.7.13 Mileage Measurement (Cont'd)

(G) When the Alternate Traffic Routing optional feature is provided with Feature Groups B, C and D to provide service from an end office to different customer premises locations, Switched Transport access minutes will be apportioned between the two (2) transmission routes used to provide this feature. For Feature Groups B and C, such apportionment will be made using standard Company traffic engineering methodology and will be based on the last trunk CCS desired for the high usage group, as described in 6.3(O)(1) preceding, and the relative capacity ordered to the end office, when the feature is provided at an end office switch, or to the subtending end offices when the feature is provided at an access tandem switch. For Feature Group D, the apportionment will be based on the actual measured data which is recorded against the specific trunk group that carried a particular call. This apportionment will serve as the basis for the Switched Transport mileage calculation. The customer will be billed accordingly.

6. Switched Access Service (Cont'd)

6.7 Rate Regulations (Cont'd)

6.7.13 Mileage Measurement (Cont'd)

(H) Switched Transport mileage for access minutes originating from or terminating at a Remote Switching System (RSS) or Remote Switching Module (RSM) that shares an NXX with its Host Office will be based on the airline miles between the customer's serving wire center and the Host Office. Switched Transport mileage for access minutes originating from or terminating at an RSS or RSM that has its own NXX (i.e., different from the Host's NXX) will be based on the airline miles between the customer's serving wire center and the RSS or RSM.

(I) When terminating Feature Group C Switched Access Service is provided from multiple customer premises to an end office not equipped with measurement capabilities, the total Switched Transport access minutes for that end office will be apportioned among the trunk groups accessing the end office on the basis of the capacity ordered for each FGC trunk group. This apportionment will serve as the basis for Switched Transport mileage calculation and the customer will be billed accordingly.

(J) When FGA calls terminate within the local calling area of the dial tone office, the Switched Transport mileage will be calculated on an airline basis between the customer's serving wire center and the dial tone office.

(K) Switched Transport mileage for Interim 500, TFC and 900 Access Service is based on the airline distance between the end office switch where the Interim 500, TFC or 900 Access Service traffic originates and the customer's serving wire center.

6. Switched Access Service (Cont'd)

6.7 Rate Regulations (Cont'd)

6.7.13 Mileage Measurement (Cont'd)

(L) ***Reserved for Future Use*** (C)
(D)

(D)

(M) Where Feature Groups A, B, C and D Switched Access Services are connected with Special Access Service at a WATS Serving Office, the Company will measure mileage on an airline basis between:

(1) The WATS Serving Office and the serving wire center for the customer designated premises, or

(2) The Feature Group A or B entry switch and the serving wire center for the customer designated premises.

6. Switched Access Service (Cont'd)

6.7 Rate Regulations (Cont'd)

6.7.14 Shared Use

Shared use occurs when Switched Access Service and Special Access Service are provided over the same analog or digital high capacity facility through a common interface. The regulations governing the provision of Shared Use Facilities are set forth in 7.4.8 following. Switched Access rates and charges as set forth in 6.8 following will apply for each channel of the high capacity facility that is used to provide Switched Access Service.

6. Switched Access Service (Cont'd)

6.7 Rate Regulations (Cont'd)

6.7.15 Reserved For Future Use

6.7.16 Interim 500 or 900 NXX in Multi-State LATAs

For customers ordering LATA-wide Interim 500 Access Service or 900 Access Service in LATAs that cross state boundaries, but are served by the same screening office, as set forth in Section 6.8.5 and Section 6.8.6 of the Embarq (T)
Local Operating Companies Tariff F.C.C. No. 1, will not be billed twice (i.e., (T)
once for each state); they will only be billed once for each NXX code activated or deactivated in that screening office.

6.7.17 Facility Hubs

A customer has the option of ordering DS1, DS3 or STS1 facilities to a facility Hub for channelizing to individual services requiring lower capacity facilities.

Different locations may be designated as Hubs for different facility capacities, (e.g., Multiplexing from Digital to Digital may occur at one location while Multiplexing from Digital to Voice may occur at a different location). When ordering, the customer must specify the desired Multiplexing Hub(s) selected from the National Exchange Carrier Association, Inc. Tariff F.C.C. No. 4. This tariff identifies the type(s) of Multiplexing functions which are available and the wire centers at which they are available.

Some types of the types of Multiplexing available include the following:

- From higher to lower bit rate
- From digital to voice frequency channels

6. Switched Access Service (Cont'd)

6.7 Rate Regulations (Cont'd)

6.7.17 Facility Hubs (Cont'd)

End-to-End Services may be provided on channels of these facilities to a Hub. The transmission performance for the End-to-End Service provided between customer designated premises will be that of the lower capacity or bit rate. For example, when a DS1 facility is Multiplexed to voice frequency channels, the transmission performance of the channelized services will be Voice Grade, not DS1.

The Company will commence billing the monthly rate for the facility to the Hub on the date specified by the customer on the service order. Individual services utilizing these facilities may be installed coincident with the installation of the facility to the Hub, or may be ordered and/or installed at a later date, at the option of the customer. The customer will be billed for a DS1***,*** DS3 ***or STS1 Channel*** (C)
Termination, Channel Mileage (when applicable) ***and Multiplexer*** at the time the (T)
facility is installed. Individual service rates (by service type) will apply for a ***Channel*** (T)
Termination and additional Channel Mileage (as required) for each channelized service. These will be billed to the customer as each individual service is installed.

Cascading Multiplexing occurs when a DS1***,*** DS3 ***or STS1*** facility is de-multiplexed (C)
to provide channels with a lesser capacity and one (1) of the lesser capacity channels is further de-multiplexed. For example, a DS3 facility is de-multiplexed to twenty-eight DS1 facilities, and then one of the DS1 facilities is further de-multiplexed to individual Voice Grade channels.

When Cascading Multiplexing is performed, whether in the same or different Hub, a charge for the additional Multiplexing unit also applies. When Cascading Multiplexing is performed at different Hubbing locations, Channel Mileage Charges also apply between the Hubs.

6.7.18 Reserved For Future Use

6. Switched Access Service (Cont'd)

6.8 Rates and Charges

6.8.1 ***Reserved For Future Use*** (C)

(D)

(D)

6.8.2 Switched Transport

(A) Entrance Facilities

	Monthly Rate	Nonrecurring Charge
(1) Voice Grade		
- Per Point of Termination		
- Two-Wire	$ 25.00	$ 77.50
- Four-Wire	45.24	77.50
(2) DS1		
- Per DS1	133.81	175.00
(3) DS3		

- Per Point of Termination

Monthly Rates			
Within CO	0 - 3 Miles	Over 3 Miles	Nonrecurring Charge
$2,100.00	$2,100.00	$2,100.00	$463.00

6. Switched Access Service (Cont'd)

6.8 Rates and Charges (Cont'd)

6.8.2 Switched Transport (Cont'd)

(A) Entrance Facilities

(4) OptiPoint-3 With Telephone Company Provided Terminal Equipment

(a) One Year Commitment Rates (N)

- Per Point of Termination

Monthly Rates			***Nonrecurring***
Within CO	***0 - 3 Miles***	***Over 3 Miles***	***Installation Charge***
$1,938.00	***$3,406.00***	***$5,556.00***	***$5,290.00***

(N)

(b) Three Year Commitment Rates (T)

- Per Point of Termination

Monthly Rates		
Within CO	0 - 3 Miles	Over 3 Miles
$1,550.00	$2,725.00	$4,445.00

(c) Five Year Commitment Rates (T)

- Per Point of Termination

Monthly Rates		
Within CO	0 - 3 Miles	Over 3 Miles
$1,400.00	$2,450.00	$4,000.00

(M)

(M)

(M) Material previously appearing on this page now appears on Page 288.1.1.

6. Switched Access Service (Cont'd)

6.8 Rates and Charges (Cont'd)

6.8.2 Switched Transport (Cont'd)

(A) Entrance Facilities (Cont'd)

(5) OptiPoint-3 Without Telephone Company Provided Terminal Equipment (M)

(a) One Year Commitment Rates

- Per Point of Termination

Monthly Rates			Nonrecurring
Within CO	0 - 3 Miles	Over 3 Miles	Installation Charge
$1,150.00	$2,606.00	$4,763.00	$4,070.00

(b) Three Year Commitment Rates (T) (M)

- Per Point of Termination

Monthly Rates		
Within CO	0 - 3 Miles	Over 3 Miles
$920.00	$2,085.00	$3,810.00

(M)

(M) Material appearing on this page previously appeared on Fourth Revised Page 288.1.

6. Switched Access Service (Cont'd)

6.8 Rates and Charges (Cont'd)

6.8.2 Switched Transport (Cont'd)

(A) Entrance Facilities (Cont'd)

(5) OptiPoint-3 Without Telephone Company Provided Terminal Equipment (Cont'd)

(c) Five Year Commitment Rates (T)

- Per Point of Termination

Monthly Rates		
Within CO	0 - 3 Miles	Over 3 Miles
$830.00	$1,875.00	$3,425.00

(M)

(M)

(M) Material previously appearing on this page now appears on Page 288.2.1

6. Switched Access Service (Cont'd)

6.8 Rates and Charges (Cont'd)

6.8.2 Switched Transport (Cont'd)

(A) Entrance Facilities (Cont'd)

(6) OptiPoint-12 With Telephone Company Provided Terminal Equipment (M)

(a) One Year Commitment Rates (N)

- Per Point of Termination

Monthly Rates			Nonrecurring
Within CO	0 - 3 Miles	Over 3 Miles	Installation Charge
$2,571.00	$3,888.00	$6,250.00	$13,230.00

(N)

(b) Three Year Commitment Rates (T) (M)

- Per Point of Termination

Monthly Rates		
Within CO	0 - 3 Miles	Over 3 Miles
$2,057.00	$3,110.00	$5,000.00

(c) Five Year Commitment Rates (T)

- Per Point of Termination

Monthly Rates		
Within CO	0 - 3 Miles	Over 3 Miles
$2,000.00	$2,800.00	$4,500.00

(M)

(M) Material appearing on this page previously appeared on Original Page 288.2

6. Switched Access Service (Cont'd)

6.8 Rates and Charges (Cont'd)

6.8.2 Switched Transport (Cont'd)

(A) Entrance Facilities (Cont'd)

(7) OptiPoint-12 Without Telephone Company Provided Terminal Equipment

(a) One Year Commitment Rates (N)

- Per Point of Termination

Monthly Rates			***Nonrecurring Installation Charge***
Within CO	***0 - 3 Miles***	***Over 3 Miles***	
$1,519.00	***$2,944.00***	***$5,288.00***	***$10,890.00***

(N)

(b) Three Year Commitment Rates (T)

- Per Point of Termination

Monthly Rates		
Within CO	0 - 3 Miles	Over 3 Miles
$1,215.00	$2,355.00	$4,230.00

(c) Five Year Commitment Rates (T)

- Per Point of Termination

Monthly Rates		
Within CO	0 - 3 Miles	Over 3 Miles
$1,090.00	$2,120.00	$3,805.00

6. Switched Access Service (Cont'd) (N)

6.8 Rates and Charges (Cont'd)

6.8.2 Switched Transport (Cont'd)

(A) Entrance Facilities (Cont'd)

(8) OptiPoint-48 With Telephone Company Provided Terminal Equipment

(a) Three Year Commitment Rates

- Per Point of Termination

Monthly Rates		
Within CO	0 - 3 Miles	Over 3 Miles
$6,500.00	$10,000.00	$13,500.00

(b) Five Year Commitment Rates

- Per Point of Termination

Monthly Rates		
Within CO	0 - 3 Miles	Over 3 Miles
$5,900.00	$9,100.00	$11,000.00

(N)

6. Switched Access Service (Cont'd)

6.8 Rates and Charges (Cont'd)

6.8.2 Switched Transport (Cont'd)

(A) Entrance Facilities (Cont'd)

(9) OptiPoint-48 Without Telephone Company Provided Terminal Equipment

(a) Three Year Commitment Rates

- Per Point of Termination

Monthly Rates		
Within CO	0 - 3 Miles	Over 3 Miles
$4,000.00	$5,900.00	$10,600.00

(b) Five Year Commitment Rates

- Per Point of Termination

Monthly Rates		
Within CO	0 - 3 Miles	Over 3 Miles
$3,500.00	$5,500.00	$10,000.00

(10) STS1 (51.84 Mbps) (N)

- Per Point of Termination

Monthly Rates		
Within CO	***0 - 3 Miles***	***Over 3 Miles***
$1,425.00	***$1,750.00***	***$3,000.00***

Nonrecurring Installation Charge	***Nonrecurring Rearrangement Charge***
$300.00	***$150.00***

(N)

6. Switched Access Service (Cont'd)

6.8 Rates and Charges (Cont'd)

6.8.2 Switched Transport (Cont'd)

(B) Direct-Trunked Transport

	Monthly Rates		
	Termination (Fixed)	Facility (Per Mile)	
(1) Voice Grade			
- Per Channel	$ 23.30	$ 1.90	
(2) DS1			
- Per DS1	90.00	23.00	
(3) DS3			
- Per DS3	1,200.00	175.00	
(4) OptiPoint-3			
(a) One Year			(N)
Commitment Rates	***2,368.00***	***194.00***	(N)
(b) Three Year			(T)
Commitment Rates	1,894.00	155.00	
(c) Five Year			(T)
Commitment Rates	1,698.00	140.00	
(5) OptiPoint 12			
(a) One Year			(N)
Commitment Rates	***7,440.00***	***505.00***	(N)
(b) Three Year			(T)
Commitment Rates	5,952.00	404.00	
(c) FiveYear			(T)
Commitment Rates	5,353.00	337.00	
(6) OptiPoint-48			
(a) Three Year			
Commitment Rates	15,200.00	650.00	
(b) Five Year			
Commitment Rates	13,600.00	600.00	
(7) STS1 (51.84 Mbps)			
- Per STS1	825.00	180.00	

6. Switched Access Service (Cont'd)

6.8 Rates and Charges (Cont'd)

6.8.2 Switched Transport (Cont'd)

(C) Tandem-Switched Transport

(1) Tandem-Switched Transmission

Termination ***(Fixed)*** Per Access Minute	Facility ***(Per Mile)*** Per Access Minute	
$0.000997	$0.000056	(T)

(2) Tandem Switching

Rate Per Access Minute
$0.001197

6. Switched Access Service (Cont'd)

6.8 Rates and Charges (Cont'd)

6.8.2 Switched Transport (Cont'd)

(D) Optional Features	Monthly Rate	Nonrecurring Charge	
(1) Provision of Other than Company Selected Traffic Routing (Available with FGB, FGC and FGD)			(T)
- Direct Trunking in lieu of Tandem Trunking	ICB	ICB	

6. Switched Access Service (Cont'd)

6.8 Rates and Charges (Cont'd)

6.8.2 Switched Transport (Cont'd)

(D) Optional Features (Cont'd)	Monthly Rate	Nonrecurring Charge	
(1) Provision of Other than Company Selected Traffic Routing (Available with FGB, FGC and FGD) (Cont'd)			(T)
- Tandem Trunking in lieu of Direct Trunking	ICB	ICB	

6. Switched Access Service (Cont'd)

6.8 Rates and Charges (Cont'd)

6.8.2 Switched Transport (Cont'd)

(D) Optional Features (Cont'd)	Monthly Rate	Nonrecurring Charge	
(2) Customer Specification of Feature Group Directionality (Available with FGB, FGC* and FGD)			(T)
- One-Way Operation in lieu of Two-Way Operation	ICB	ICB	

* For FGC this option is available only in appropriately equipped end offices.

6. Switched Access Service (Cont'd)

6.8 Rates and Charges (Cont'd)

6.8.2 Switched Transport (Cont'd)

(D) Optional Features (Cont'd)	Monthly Rate	Nonrecurring Charge	
(2) Customer Specification of Feature Group Directionality (Available with FGB, FGC* and FGD) (Cont'd)			(T)
- Two-Way Operation in lieu of One-Way Operation	ICB	ICB	

For FGC this option is available only in appropriately equipped end offices.

6. Switched Access Service (Cont'd)

6.8 Rates and Charges (Cont'd)

6.8.2 Switched Transport (Cont'd)

(D) Optional Features (Cont'd)	Monthly Rate	Nonrecurring Charge	
(3) Customer Specification of Switched Transport Termination (Available with FGB with Type B Transmission Performance)			(T)
- Four-Wire Termination in lieu of Two-Wire Termination	ICB	ICB	

6. Switched Access Service (Cont'd)

6.8 Rates and Charges (Cont'd)

6.8.2 Switched Transport (Cont'd)

(D) Optional Features (Cont'd)	Monthly Rate	Nonrecurring Charge
(4) Multiplexing		
- DS1 to Voice Grade	$290.00	$68.00
- DS3 to DS1	970.00	50.00
- STS1 to DS1	875.00	250.00

(5) OptiPoint Configuration Node

	Monthly Rates			
	One Year	Three Year	Five Year	(C)
(a) OC3 – per arrangement	***$ 219.00***	$175.00	$150.00	
(b) OC12 - per arrangement	***1,000.00***	800.00	700.00	
(c) OC48 – per arrangement	***N/A***	910.00	800.00	(C)

(6) OptiPoint-3 Configuration Card

	Monthly Rates - Per Card				
	DS1 Level	DS3 Level	OC3 Concatenated	STS1 Level	
(a) One Year Commitment Rates	***$23.00***	***$83.00***	***$469.00***	***$88.00***	(N) (N)
(b) Three Year Commitment Rates	18.00	66.00	348.00	70.00	(T)
(c) Five Year Commitment Rates	15.00	59.00	303.00	65.00	(T)

6. Switched Access Service (Cont'd)

6.8 Rates and Charges (Cont'd)

6.8.2 Switched Transport (Cont'd)

(D) Optional Features (Cont'd)

(7) OptiPoint 12 Configuration Card

	Monthly Rate Per Card	
(a) One Year Commitment Rates		
DS1 Level	$ 23.00	
DS***3*** Level	83.00	(T)
OC3 Level	243.00	
OC3 Concatenated	306.00	
OC12 Concatenated	4,446.00	
STS1 Level	88.00	

6. Switched Access Service (Cont'd)

6.8 Rates and Charges (Cont'd)

6.8.2 Switched Transport (Cont'd)

(D) Optional Features (Cont'd)

(7) OptiPoint-12 Configuration Card ***(Cont'd)*** (T)

	Monthly Rate - Per Card
(b) Three Year Commitment Rates (T)	
- DS1 Level	$ 18.00
- DS3 Level	66.00
- OC3 Level	194.00
- OC3 Concatenated	245.00
- OC12 Concatenated	3,557.00
- STS1 Level	70.00
(c) Five Year Commitment Rates (T)	
- DS1 Level	16.00
- DS3 Level	55.00
- OC3 Level	161.00
- OC3 Concatenated	205.00
- OC12 Concatenated	2,965.00
- STS1 Level	65.00

6. Switched Access Service (Cont'd)

6.8 Rates and Charges (Cont'd)

6.8.2 Switched Transport (Cont'd)

(D) Optional Features (Cont'd)

(8) OptiPoint-48 Configuration Card

	Monthly Rate - Per Card
(a) Three Year Commitment Rates	
- DS3 Level	$ 100.00
- OC3 Level	375.00
- OC12 Level	600.00
- OC3 Concatenated	430.00
- OC12 Concatenated	690.00
- STS1 Level	160.00

(D)

6. Switched Access Service (Cont'd)

6.8 Rates and Charges (Cont'd)

6.8.2 Switched Transport (Cont'd)

(D) Optional Features (Cont'd)

(8) OptiPoint-48 Configuration Card

	Monthly Rate - Per Card
(b) Five Year Commitment Rates	
- DS3 Level	$ 95.00
- OC3 Level	350.00
- OC12 Level	475.00
- OC3 Concatenated	405.00
- OC12 Concatenated	545.00
- STS1 Level	145.00

(9) OptiPoint-3, 12 and 48 Service Upgrade	Nonrecurring Charge	
- Per DS1**,** DS3 ***or STS1*** Upgraded	$1,000.00	(C)

(10) OptiPoint Reconfiguration Charge

- Per DS3 Equivalent	625.00

6. Switched Access Service (Cont'd)

6.8 Rates and Charges (Cont'd)

6.8.2 Switched Transport (Cont'd)

(E) Network Blocking Charge

	Rate Per Call Blocked
- Per Call **	ICB

(F) Installation

		Nonrecurring Charge
- Per Line	(D)	$37.00
- Per Trunk	(D)	37.00

** Applies to FGD.

6. Switched Access Service (Cont'd)

6.8 Rates and Charges (Cont'd)

6.8.3 Local Switching

	Rate Per Access Minute
Premium Rates	
LS1 - Originating and Terminating Feature Group A and Feature Group B	$0.004158 (R)

6. Switched Access Service (Cont'd)

6.8 Rates and Charges (Cont'd)

6.8.3 Local Switching (Cont'd)

	Rate Per Access Minute
Premium Rates (Cont'd)	
LS2 - Originating and Terminating Feature Group C and Feature Group D	$0.004158 (R)

6. Switched Access Service (Cont'd)

6.8 Rates and Charges (Cont'd)

6.8.3 Local Switching (Cont'd)

Transitional Rates

	Rate Per Access Minute
	$0.003332

(A) Trunk Conversion Charge

A nonrecurring charge(s) will apply when a customer requests a conversion of FGD trunks from SS7 signaling to multifrequency signaling as specified below: (C) (C)

- Per 24 Channels Converted or Fraction Thereof

	Nonrecurring Charge
	$45.00

(B) End Office to Tandem Rearrangement Charge

A nonrecurring charge as specified below will apply when a customer requests end office or tandem rearrangement of FGD trunks as set forth in 6.7.1(C)(3) preceding.

- Per 24 Channels Converted or Fraction Thereof

	Nonrecurring Charge
	$54.00

6. Switched Access Service (Cont'd)

6.8 Rates and Charges (Cont'd)

6.8.3 Local Switching (Cont'd)

Transitional Rates (Cont'd)

(C) Carrier Selection Parameter (CSP) Charge

A nonrecurring charge as specified below will apply when a customer requests the Carrier Selection Parameter (CSP) optional feature described in 6.3(FF) preceding. This charge does not apply if the feature is installed coincident with the initial installation of a service.

			Nonrecurring Charge
		(D)	
-	Per End Office Equipped	(D)	$18.00

6. Switched Access Service (Cont'd)

6.8 Rates and Charges (Cont'd)

6.8.4 Toll Free Code (TFC) Access Service

(A) TFC Access Service Data Base Query

	Rate
- Per Query	$0.004000

(B) TFC Data Base Optional Service Features *

	Rate
- Per Query	$0.001344

* When a combination of one (1) or more TFC Data Base Optional Service Features is used, only one (1) charge will apply.

6. Switched Access Service (Cont'd)

6.8 Rates and Charges (Cont'd)

6.8.5 Reserved For Future Use

6.8.6 ***Reserved For Future Use*** (C)

(D)

(D)

6. Switched Access Service (Cont'd)

6.8 Rates and Charges (Cont'd)

6.8.7 Optical Service Charge

- ***Per Node***	Nonrecurring Charge	(N)
- OC3	$ 7,500.00	
- OC12	8,500.00	
- OC48	12,500.00	

6.8.8 Reserved for Future Use

7. Special Access Service

7.1 General

Special Access Service provides a transmission path to connect customer-designated premises*****, either directly or through a Company Hub where bridging or multiplexing functions are performed or to connect a customer designated premises and a WATS Serving Office. Special Access Service includes all exchange access not utilizing Company end office switches.

The connections provided by Special Access Service can be either analog or digital. Analog connections are differentiated by spectrum and bandwidth. Digital connections are differentiated by bit rate.

7.1.1 Channel Types

There are ***three*** types of channels used to provide Special Access Services. Each type has its own characteristics. All are subdivided by one or more of the following: (C)

- Transmission specifications,
- Bandwidth,
- Speed (i.e., bit rate),
- Spectrum

Customers can order a basic channel and select, from a list of available transmission parameters and channel interfaces, those that they desire to meet specific communications requirements.

***** Company Centrex CO-like switches are considered to be customer premises for purposes of this tariff.

7. Special Access Service (Cont'd)

7.1 General (Cont'd)

7.1.1 Channel Types (Cont'd)

For purposes of ordering channels, each has been identified as a type of Special Access Service. However, such identification is not intended to limit a customer's use of the channel nor to imply that the channel is limited to a particular use. (D)

(D)

Following is a brief description of each type of channel:

(D)
(D)

Voice Grade - A channel for the transmission of analog signals within an approximate bandwidth of 300 - 3000 Hz.

7. Special Access Service (Cont'd)

7.1 General (Cont'd)

7.1.1 Channel Types (Cont'd)

Digital Data - A channel for the digital transmission of synchronous serial data at rates of 2.4, 4.8, 9.6, 19.2, 56.0 ***or 64.0*** kbps. (C)

High Capacity - A channel for the transmission of isochronous serial digital data at rates of 1.544 or 44.736 ***Mbps***. (C)

Detailed ***descriptions*** of each of the channel types are provided in 7.2 following. (T)

The customer also has the option of ordering digital high capacity facilities to a Company Hub for multiplexing to individual channels of a lower capacity or bandwidth. Description of the types of multiplexing available at the Hubs, as well as the number of individual channels which may be derived from each type of facility are set forth in 7.2 following. Additionally, the customer may specify optional features for the individual channels derived from the facility to further tailor the channel to meet specific communications requirements. Descriptions of the optional features and functions available are also set forth in 7.2 following.

7. Special Access Service (Cont'd)

7.1 General (Cont'd)

7.1.1 Channel Types (Cont'd)

For example, a customer may order a 1.544 Mbps facility from a customer designated premises to a Company Hub. The 1.544 Mbps facility may be multiplexed at the same or a different Hub to Voice Grade channels or may be extended to other customer designated premises. Optional features may be added to either the 1.544 Mbps or the Voice Grade Channels.

7.1.2 Rate Categories

There are three basic rate elements that apply to Special Access Service:

- Service Terminations (described in 7.1.2(A) following)
- Channel Mileage (described in 7.1.2(C) following)
- Optional Features and Functions (described in 7.1.2(E) following)

(A) Service Termination

The Service Termination rate category provides for the communications path between a customer designated premises and the serving wire center or WATS Serving Office of that premises. Included as part of the Service Termination is a standard channel interface arrangement which defines the technical characteristics associated with the type of facilities to which the access service is to be connected at the Point of Termination (POT) ***and the type of signaling capability if any. The signaling capability itself is provided as part of this rate category. One*** Service Termination charge applies per customer designated premises at which the channel is ***terminated***. ***Service*** Termination charges for DS3 High Capacity Service may vary based on distance, as set for in 7.5.9(A) following. ***Special Access Service used in connection with Switched Access service is provided as set forth in Section 6.1.1.*** (C) (C) (C) (N) (N)

7. Special Access Service (Cont'd)

7.1 General (Cont'd)

7.1.2 Rate Categories (Cont'd)

(B) Channel Mileage

The Channel Mileage rate category provides for the end office equipment and the transmission channel between the serving wire centers associated with two (2) customer designated premises, between a serving wire center associated with a customer designated premises and a Company Hub, between two (2) Company Hubs, or between a WATS Serving Office and a customer serving wire center when the two (2) are not collocated. Channel Mileage rates are made up of the Channel Mileage Facility rate and the Channel Mileage Termination rate. Channel Mileage Charges are set forth in Section 7.5 following

(1) Channel Mileage Facility ***(Per Mile)*** (T)

The Channel Mileage Facility rate recovers the cost for the transmission path which extends between the Company serving wire centers and/or Hub(s) and includes primarily outside plant used to provide the facility.

(2) Channel Mileage Termination ***(Fixed)*** (T)

The Channel Mileage Termination rate recovers the cost for end office equipment associated with terminating the facility (i.e., basic circuit equipment and terminations at serving wire centers and Hubs). The Company applies a 50% billing percentage to the Channel Mileage Termination rate on jointly owned circuits and applies 100% on wholly owned circuits. When the Channel Mileage Facility is zero (0) (i.e., collocated serving wire center), neither the Channel Mileage Facility rate nor the Channel Mileage Termination rate will apply.

7. Special Access Service (Cont'd)

7.1 General (Cont'd)

7.1.2 Rate Categories (Cont'd)

(C) Optional Features and Functions

The Optional Features and Functions rate category provides for optional features and functions which may be added to a Special Access Service to improve its quality or utility to meet specific communications requirements. These are not necessarily identifiable with specific equipment, but rather represent the end result in terms of performance characteristics that may be obtained. These characteristics may be obtained by using various combinations of equipment. Although the equipment necessary to perform a specified function may be installed at various locations along the path of the service, they will be charged for as a single rate element.

Examples of Optional Features and Functions that are available include, but are not limited to, the following:

- Hubbing Functions
- Conditioning
- Transfer Arrangements

A Hub is a Company designated serving wire center at which bridging or multiplexing functions are performed. The bridging functions performed are to connect three (3) or more customer-designated premises in a multipoint arrangement. The multiplexing functions are to channelize digital facilities to individual services requiring a lower capacity or bandwidth.

Descriptions for each of the available Optional Features and Functions are set forth in 7.2 following.

7. Special Access Service (Cont'd)

7.1 General (Cont'd)

7.1.3 Service Configurations

There are three types of service configurations over which Special Access Services are provided: two-point service, multipoint service and extension service.

(A) Two-Point Service

A two-point service connects two customer-designated premises, either on a directly connected basis or through a Hub where multiplexing functions are performed, or a customer designated premises and a WATS Serving Office.

Applicable rate elements are:

- Service Terminations
- Channel Mileage (as applicable)
- Optional Features and Functions (when applicable)

In addition, a Special Access Surcharge as set forth in 7.4.2 following may be applicable.

The following diagram depicts a two-point Voice Grade service connecting two customer designated premises located 15 miles apart. The service is provided with C-Type Conditioning.

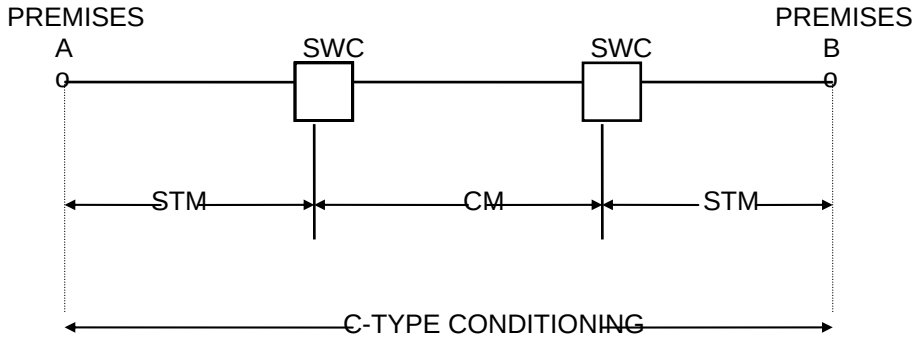

STM - Service Termination
CM - Channel Mileage
SWC - Serving Wire Center

7. Special Access Service (Cont'd)

7.1 General (Cont'd)

7.1.3 Service Configurations (Cont'd)

(A) Two-Point Service (Cont'd)

Applicable rate elements are:

- Service Terminations (Two (2) applicable)
- Channel Mileage (One (1) Termination and Fifteen (15) Facility)
- C-Type Conditioning Optional Feature

(B) Multipoint Service

Multipoint service connects three (3) or more customer designated premises through a Company Hub. There is no limitation on the number of mid-links available with multipoint service. However, when more than three (3) mid-links are provided in tandem, the quality of the service may be degraded. A mid-link is a channel between Hubs (i.e., bridging locations). Only certain types of Special Access Service are provided as multipoint service. These are so designated in the Service Descriptions set forth in 7.2 following.

Multipoint service utilizing a customized technical specifications package as set forth in 7.2 following will be provided when technically possible. If the Company determines that the requested characteristics for a multipoint service are not compatible, the customer will be advised and given the opportunity to change the order.

When ordering, the customer will specify the desired bridging Hub(s) selected from the National Exchange Carrier Association***, Inc.*** Tariff (T)
F.C.C. No. 4. This Tariff identifies the type(s) of bridging functions ***that*** (T)
are available and the serving wire centers at which they are available.

7. Special Access Service (Cont'd)

7.1 General (Cont'd)

7.1.3 Service Configurations (Cont'd)

(B) Multipoint Service (Cont'd)

Applicable rate elements are:

- Service Terminations (one per customer designated premises)
- Channel Mileage (as applicable between each designated customer premises and the Hub and between Hubs)
- Bridging
- Additional Optional Features (when applicable)

In addition, the Special Access Surcharge as set forth in 7.4.2 following may be applicable.

Example: Voice Grade multipoint service connecting four customer premises via two customer specified bridging hubs.

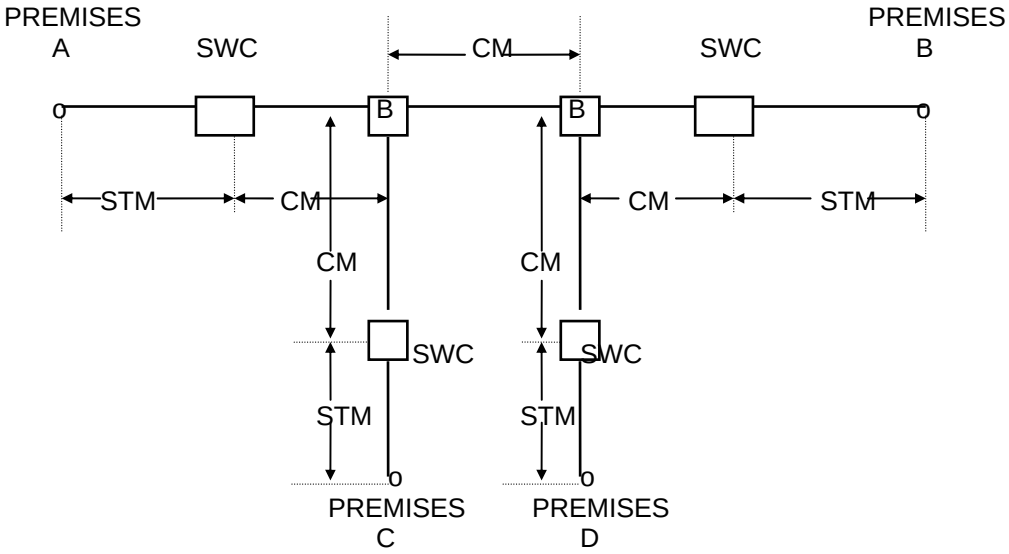

STM - Service Termination
CM - Channel Mileage
B - Bridging
SWC - Serving Wire Center

7. Special Access Service (Cont'd)

7.1 General (Cont'd)

7.1.3 Service Configurations (Cont'd)

(B) Multipoint Service (Cont'd)

Applicable rate elements are:

- Service Terminations (Four (4) applicable)
- Channel Mileage (Five (5) sections, Termination and Facility as appropriate)
- Bridging (Six (6) applicable, i.e., each bridge port)

(C) Extension Service

Special Access Service utilized for connection with Feature Group A Switched Access Service is available with extensions, i.e., additional terminations of the service at different building(s) in the same or a different exchange. Feature Group A extensions within the same exchange are charged for under the Company's General Subscriber Services Tariff. Feature Group A extensions in different exchanges and Voice Grade extensions in the same or different exchanges are charged for as Special Access Service. The rate elements which apply are: Voice Grade Service Termination, Channel Mileage, if applicable, and Voice Bridging, if applicable. All appropriate monthly rates and nonrecurring charges set forth in 7.5.3 following will apply. Such extensions are ordered as set forth in 5.2 preceding.

7.1.4 Alternate Use

Alternate Use occurs when a service is arranged by the Company so that the customer can select different types of transmission at different times. A customer may use a service in any privately beneficial manner. However, where technical or engineering changes are required to effectuate an alternate use, the Company will make such special arrangements available on an individual case basis.

7. Special Access Service (Cont'd)

7.1 General (Cont'd)

7.1.4 Alternate Use (Cont'd)

The arrangement required to transfer the service from one operation to the other (i.e., the transfer relay and control leads) will be rated and provided on an individual case basis and filed in 12. following, Specialized Service or Arrangements. The customer will pay the stated tariff rates for the Access Service rate elements for the service ordered (i.e., Service Terminations, Channel Mileage [as applicable] and Optional Features [if any]).

7.1.5 Special Facilities Routing

A customer may request that the facilities used to provide Special Access Service be specially routed. The regulations, rates and charges for Special Facilities Routing (i.e., Avoidance, Diversity and Cable-Only) are set forth in 11. following.

7.1.6 Design Layout Report

At the request of the customer, the Company will provide to the customer the make-up of the facilities and services provided under this tariff as Special Access Service to aid the customer in designing its overall service. This information will be provided in the form of a Design Layout Report. The Design Layout Report will be provided to the customer at no charge, and will be reissued or updated whenever these facilities are materially changed.

7. Special Access Service (Cont'd)

7.1 General (Cont'd)

7.1.7 Acceptance Testing

At no additional charge, the Company will, at the customer's request, cooperatively test, at the time of installation, the following parameters:

(A) For Voice Grade analog services, acceptance tests will include tests for loss 3-tone slope, DC continuity, operational signaling, C-notched noise and C-message noise when these parameters are applicable and specified in the order for service. Acceptance tests will include tests for the specific parameters/capabilities applicable to the service as contained on the order for the service. Additionally, for Voice Grade services, a balance (improved loss) test will be made if the customer has ordered the improved loss optional feature.

(B) ***All other services will be tested to the performance parameters specified*** (C)
for the individual services. (C)

Additional tests may be ordered as set forth in 13.3.5 following. Charges for these additional tests are set for in 13.3.5(C) following.

7.1.8 Ordering Options and Conditions

Special Access Service is ordered under the Access Order provisions set forth in 5. preceding. Also included in that section are other charges which may be associated with ordering Special Access Service (e.g., Access Order Charges, Service Date Change Charges, Design Change Charges, etc.).

7. Special Access Service (Cont'd)

7.1 General (Cont'd)

7.1.9 Reserved For Future Use (C)

(D)

(D)

7.2 Service Descriptions

For the purposes of ordering, there are three categories of Special Access Service. These are:

Voice Grade	(VG)
Digital Data	(DA)
High Capacity	(HC)

Each service consists of a basic channel to which a technical specifications package (customized or predefined), channel interface(s) and, when desired, optional features and functions are added to construct the service desired by the customer. Each of the components of the service is described in this section.

Customized technical specifications packages will be provided where technically feasible. If the Company determines that the requested parameter specifications are not compatible, the customer will be advised and given the opportunity to change the order.

When a customized channel is ordered the customer will be notified whether Additional Engineering Charges apply. In such cases, the customer will be given an estimate of the hours to be billed before any further action is taken on the order.

7. Special Access Service (Cont'd)

7.2 Service Descriptions (Cont'd)

The channel description specifies the characteristics of the basic channel and indicates whether the channel is provided between the customer designated premises, between a customer designated premises and a Company Hub where bridging or multiplexing functions are performed, or between a customer designated premises and a WATS Serving Office.

Information pertaining to the technical specifications packages indicates the transmission parameters that are available with each package. This information is displayed in a matrix with the transmission parameters listed down the left side and the packages listed across the top. Each package is identified by a code, e.g., VGC. The first two letters of the code indicate the category of Special Access Service to which the parameters are applicable. These two letter codes are shown in parentheses following the category of Special Access Service. The letter "C" following the two letter code indicates the technical specifications package for a customized service. A numeric or alpha-numeric designation following the two letter code indicates the specific predefined package. For a customized service, the customer may select any parameters available with that category of service as long as the parameters are compatible. When appropriate, the Technical Reference which contains detailed specifications for the parameters is shown following the matrix.

Channel interfaces at each point of termination on a two-point service may be symmetrical or asymmetrical. On a multipoint service they may also be symmetrical or asymmetrical. However, communications can only be provided between points of termination with compatible channel interfaces. Only certain channel interfaces are compatible. These are set forth in 7.3.5 following in a combination format.

Only certain channel interface combinations are available with the predefined technical specifications packages. These are delineated in the Technical References set forth at the end of 7.2. When a customized channel is requested, all channel interface combinations available with the specified type of service are available with the customized channel.

7. Special Access Service (Cont'd)

7.2 Service Descriptions (Cont'd)

The optional features and functions available with each type of Special Access Service are described in this section. The optional features and functions information also indicates with which technical specifications packages they are available. Such information is displayed in a matrix with the optional feature or function listed down the left side and the technical specifications package listed across the top.

The Company will maintain existing transmission specifications on services installed prior to the effective date of this tariff, except that the existing services with performance specifications exceeding the standard listed in this provision will be maintained at the performance levels specified in this tariff. All services installed after the effective date of this tariff will conform to the transmission specification standards contained in this tariff or in the following Technical Reference for each category of service:

Voice Grade	***TR-NWT-000335***	(C)
Digital Data	***TR-NTW-000341***	|
High Capacity	***GR-54 and*** GR-342	(C)

(D)

7.2.1 Reserved For Future Use

7. Special Access Service (Cont'd)

7.2 Service Descriptions (Cont'd)

7.2.2 ***Reserved For Future Use*** (C)

(D)

(D)

7. Special Access Service (Cont'd)

7.2 Service Descriptions (Cont'd)

(D)

(D)

7.2.3 Voice Grade Service

(A) Basic Channel Description

A Voice Grade channel is a channel which provides voice frequency transmission capability in the nominal frequency range of 300 to 3000 Hz and may be terminated two-wire or four-wire. Voice Grade channels are provided between customer designated premises or between a customer designated premises and a Company Hub.

(D)

7. Special Access Service (Cont'd)

7.2 Service Descriptions (Cont'd)

7.2.3 Voice Grade Service (Cont'd)

(B) Technical Specifications Packages

	Package VG-												
Parameter	C*	1	2	3	4	5	6	7	8	9	10	11	12
Attenuation Distortion	X	X	X	X	X	X	X	X	X	X	X	X	X
C-Message Noise	X	X	X	X	X	X	X	X	X	X	X	X	X
Echo Control	X	X	X	X		X		X	X			X	X
Envelope Delay Distortion	X						X	X	X	X	X	X	X
Frequency Shift	X						X	X	X	X	X	X	X
Impulse Noise	X					X	X	X	X	X	X	X	X
Intermodulation Distortion	X						X	X	X	X	X	X	X
Loss Deviation	X	X	X	X	X	X	X	X	X	X	X	X	X
Phase Hits, Gain Hits, and Dropouts	X												
Phase Jitter	X						X	X	X	X	X	X	
Signal -to-C Message Noise						X							
Signal-to-C Notch Noise	X					X	X	X	X	X	X	X	X

* The desired parameters are selected by the customer from the list of available parameters.

7. Special Access Service (Cont'd)

7.2 Service Descriptions (Cont'd)

7.2.3 Voice Grade Service (Cont'd)

(B) Technical Specifications Packages (Cont'd)

The technical specifications for these parameters (except for dropouts, gain hits, and phase hits) are delineated in Technical Reference Publication TR-NWT-000335. The technical specifications for dropouts, phase hits, and gain hits are delineated in Technical Reference Publication MDP-326-584.

(C) Channel Interfaces

The following channel interfaces for Voice Grade Service do not require signaling capability: AH, DA, DB, DD, DE, DS, ***NO and*** TF. (C)

The following channel interfaces for Voice Grade Service require signaling capability: AB, AC, CT, DX, DY, EA, EB, EC, EX, GO, GS, LA, LB, LC, LO, LR, LS, RV and SF.

Compatible channel interfaces are set forth in 7.3.5(C) following.

(D) Optional Features and Functions

(1) Central Office Bridging Capability

(a) Voice Bridging (two-wire or four-wire)

(b) Data Bridging (two-wire or four-wire)

(c) Telephoto Bridging (two-wire or four-wire)

7. Special Access Service (Cont'd)

7.2 Service Descriptions (Cont'd)

7.2.3 Voice Grade Service (Cont'd)

(D) Optional Features and Functions (Cont'd)

(2) Loopback Capability

Loopback capability allows transmission tests of circuits to be performed from the serving central office to the customer premises without the assistance of personnel at the customer premises.

(3) Conditioning

Conditioning provides more specific transmission characteristics for Voice Grade services. C-Type conditioning controls attenuation distortion and envelope delay distortion. Sealing Current helps maintain continuity on dry metallic loops.

More stringent specifications than those provided with C-Type conditioning are available separately for attenuation distortion and envelope delay distortion. The customer has the option of ordering Improved Attenuation Distortion and/or Improved Envelope Delay Distortion in lieu of C-Type conditioning.

For two-point services, the parameters apply to each service. For multipoint services, the parameters apply to each mid line or end link. C-Type conditioning and Data Capability may be combined on the same service.

7. Special Access Service (Cont'd)

7.2 Service Descriptions (Cont'd)

7.2.3 Voice Grade Service (Cont'd)

(D) Optional Features and Functions (Cont'd)

(3) Conditioning (Cont'd)

(a) C-Type Conditioning

C-Type Conditioning is provided for the additional control of attenuation distortion and envelope delay distortion on data services. The attenuation distortion and envelope delay distortion specifications for C-Type Conditioning are as set forth in Technical Reference ***Publication TR-NWT-000335***. (C)

(b) Improved Attenuation Distortion

Improved Attenuation Distortion upgrades the frequency vs. loss response limits. The specifications are as set forth in Technical Reference ***Publication TR-NWT-000335***. (C) (C)

(c) Improved Envelope Delay Distortion

Improved Envelope Delay Distortion upgrades the frequency vs. delay response limits of the channel. The specifications are as set forth in Technical Reference ***Publication TR-NWT-000335***. (C)

7. Special Access Service (Cont'd)

7.2 Service Descriptions (Cont'd)

7.2.3 Voice Grade Service (Cont'd)

(D) Optional Features and Functions (Cont'd)

(3) Conditioning (Cont'd)

(d) Sealing Current Conditioning

Sealing Current Conditioning is provided to help maintain continuity on dry metallic loops. It is usually associated with four-wire DA or NO type channel interfaces.

(4) Customer Specified Premises Receive Level

This option allows the customer to specify the receive level at the Point of Termination. This level must be within a specific range on effective four-wire transmission. The ranges are delineated in Technical Reference ***Publication TR-NWT-000335***. (C) (C)

(5) Improved Termination and Improved Return Loss

(a) Improved Termination - On Effective Four-Wire Transmission at Four-Wire Point of Termination (applicable to each two-wire port): Provides for a fixed 600 ohm impedance, variable level range and simplex reversal. Company equipment is required at the customer's premises where this option is ordered. The Improved Termination parameters are delineated in Technical Reference ***Publication TR-NWT-000335***. (C)

7. Special Access Service (Cont'd)

7.2 Service Descriptions (Cont'd)

7.2.3 Voice Grade Service (Cont'd)

(D) Optional Features and Functions (Cont'd)

(5) Improved Termination and Improved Return Loss (Cont'd)

(b) Improved Return Loss - On Effective Two-Wire Transmission at Two-Wire Point of Termination: Provides for more stringent Echo Control Specifications. In order for this option to be applicable, the transmission path must be four-wire at one POT and two-wire at the other POT. Placement of Company equipment may be required at the customer's premises with the two-wire POT. The Improved Return Loss parameters are delineated in Technical Reference ***Publication TR-NWT-000335***. (C)

(6) Data Capability

Data Capability provides transmission characteristics suitable for data communications. Specifically, Data Capability provides for the control of Signal to C-Notched Noise Ratio and intermodulation distortion. It is available for two-point services or multipoint services.

The Signal to C-Notched Noise Ratio and intermodulation distortion parameters for Data Capability are:

- Signal to C-Notched Noise Ratio is equal to or greater than 32 dB

- Intermodulation distortion:

- Signal to second order modulation products (R2) is equal to or greater than 38 dB

- Signal to third order modulation products (R3) is equal to or greater than 42 dB

7. Special Access Service (Cont'd)

7.2 Service Descriptions (Cont'd)

7.2.3 Voice Grade Service (Cont'd)

(D) Optional Features and Functions (Cont'd)

(6) Data Capability (Cont'd)

When a service equipped with Data Capability is used for voice communications, the quality of the voice transmission may not be satisfactory.

(7) Telephoto Capability

Telephoto Capability provides transmission characteristics suitable for telephotographic communications. Specifically, Telephoto Capability is provided for the control of attenuation distortion and envelope delay distortion on telephotographic services. The attenuation distortion and envelope delay distortion parameters for Telephoto Capability are:

Attenuation Distortion
(1004 Hz Reference)

Frequency Variation

Range (Hz)	(dB)
500 - 3000	-0.5 to +1.5
300 - 3200	-1.0 to +2.5

Envelope Delay Distortion

Frequency Variation

Range (Hz)	(mcs)
1000 - 2600	110
800 - 2800	180

7. Special Access Service (Cont'd)

7.2 Service Descriptions (Cont'd)

7.2.3 Voice Grade Service (Cont'd)

(D) Optional Features and Functions (Cont'd)

(8) Effective Four-Wire

An arrangement which permits the simultaneous independent transmission of information in both directions over a single facility. Effective four-wire transmission must be terminated with a four-wire service termination as specified in 7.5.2 following.

7. Special Access Service (Cont'd)

7.2 Service Descriptions (Cont'd)

7.2.3 Voice Grade Service (Cont'd)

(D) Optional Features and Functions (Cont'd)

The following table shows the technical specifications packages with which the optional features and functions are available.

	Available with Technical Specifications Package VG-													
	C	1	2	3	4	5	6	7	8	9	10	11	12	
C-Type Conditioning	X					X	X	X	X	X	X			
Central Office Bridging Capability	X		X			X	X				X	X	X	
Customer Specified Premises Receive Level	X	X	X	X	X	X	X	X	X	X	X	X	X	
Data Capability	X						X	X			X			
Improved Attenuation Distortion	X					X	X	X	X	X	X			
Improved Envelope Delay Distortion	X					X	X	X	X	X	X			
Improved Return Loss For Effective Two-Wire Transmission		X		X	X				X					
Improved Termination For Effective Four-Wire Transmission		X	X	X	X	X	X	X	X	X	X	X	X	X
Loopback Capability	X	X	X	X	X	X	X	X	X	X	X	X	X	
Sealing Current Conditioning	X						X							
Telephoto Capability	X												X	

7. Special Access Service (Cont'd)

7.2 Service Descriptions (Cont'd)

7.2.3 Voice Grade Service (Cont'd)

(E) Four-Wire/Two-Wire Conversions

When the customer requests that an effective four-wire channel be terminated with a two-wire channel interface at the customer designated premises, a four-wire to two-wire conversion is required. The rate for the conversion is included as part of the basic Service Termination rate.

7.2.4 Reserved For Future Use

7. Special Access Service (Cont'd)

7.2 Service Descriptions (Cont'd)

7.2.5 Reserved For Future Use

7. Special Access Service (Cont'd)

7.2 Service Descriptions (Cont'd)

7.2.6 Reserved For Future Use

7. Special Access Service (Cont'd)

7.2 Service Descriptions (Cont'd)

7.2.7 ***Reserved For Future Use*** (C)

(D)

(D)

7. Special Access Service (Cont'd)

7.2 Service Descriptions (Cont'd)

7.2.7 ***Reserved For Future Use*** *(Cont'd)* (C)

(D)

(D)

7. Special Access Service (Cont'd)

7.2 Service Descriptions (Cont'd)

7.2.8 Digital Data Service

(A) Basic Channel Description

A Digital Data channel is a channel for duplex four-wire transmission of synchronous serial data at the rate of 2.4, 4.8, 9.6, 19.2, 56.0 or 64.0 kbps. The actual bit rate is a function of the channel interface selected by the customer. The channel provides a synchronous service with timing provided by the Company through the Company's facilities to the customer in the received bit stream. Digital Data channels are only available via Company designated hubs and provided between customer designated premises or between a customer designated premises and a Company Hub.

The customer may provide the Channel Service Unit-type equipment or other Network Channel Terminating Equipment associated with the Digital Data channel at the customer premises. The interim program for interconnection of such equipment is set forth in Technical Reference ***Publication*** PUB AS No. 1***, Issue II***. (C)

(B) Technical Specifications Packages

	Package DA			
Parameter	1	2	3	4
Error-Free Seconds	X	X	X	X

The Company will provide a channel capable of meeting a monthly average performance equal to or greater than 99.875 ***percent*** error-free (T)
seconds while the channel is in service, if it is measured through a CSU equivalent which is designed, manufactured, and maintained to conform with the specifications contained in Technical Reference ***Publication*** (C)
MDP-326-726. (C)

7. Special Access Service (Cont'd)

7.2 Service Descriptions (Cont'd)

7.2.8 Digital Data Service (Cont'd)

(B) Technical Specifications Packages (Cont'd)

Voltages that are compatible with Digital Data Service are delineated in Technical Reference ***Publication TR-NWT-000341***. (C)

(C) Channel Interfaces

The following channel interfaces (CIs) define the bit rates that are available for a Digital Data Channel:

CI	Bit Rate
DU-24	2.4 kbps
DU-48	4.8 kbps
DU-96	9.6 kbps
DU-19	19.2 kbps
DU-56	56.0 kbps
DU-64	64.0 kbps

Compatible channel interfaces are set forth in 7.3.5(H) following.

(D) Optional Features and Functions

(1) Central Office Bridging Capability

(2) Reserved for Future Use

7. Special Access Service (Cont'd)

7.2 Service Descriptions (Cont'd)

7.2.8 Digital Data Service (Cont'd)

(D) Optional Features and Functions (Cont'd)

(3) Secondary Channel

A data transmission channel having a lower signaling rate capability than the primary channel in a system in which two (2) channels share a common interface.

Secondary Channel Capability provides for an additional low-speed digital transmission channel within the existing 56.0 kbps primary channels. The Secondary Channel can be used as a communications channel for the controlling and monitoring of the customer's network.

(4) Data Amplification

Provides for data transmission when the customer is located beyond the normal range of forty-two decibel (42dB) loss ***for Digital*** Data Service (C)
(***56.0 and 64.0*** kbps). The dB loss is determined by the route and (C)
length of the cable in addition to the gauge of the cable from the last signaling point (usually, but not always the switching office) to the customer's premises. When the dB loss is greater than forty-two (42) a repeater and associated equipment must be installed to regenerate the digital signal for accurate and acceptable data transmission to occur.

7. Special Access Service (Cont'd)

7.2 Service Descriptions (Cont'd)

7.2.8 Digital Data Service (Cont'd)

(D) Optional Features and Functions (Cont'd)

The following table shows the technical specifications packages with which the optional features and functions are available.

	Available with Technical Specifications Package DA-			
	1	2	3	4
Central Office Bridging Capability	X	X	X	X
Secondary Channel				X
Data Amplification				X

7.2.9 High Capacity Service

(A) Basic Channel Description

A High Capacity channel is a channel for the transmission of 1.544 or 44.736 Mbps isochronous serial data. The actual bit rate and framing format is a function of the channel interface selected by the customer. High Capacity channels are provided between customer designated premises or between a customer designated premises and a Company Hub. (D) (D)

The Service Termination rate element for DS3 Service may vary based on distance. The mileage used to determine the monthly rate for Service Terminations located outside a Company central office is the airline distance between the customer's designated premises and the Company serving wire center. The mileage measurement is determined by utilizing exchange maps and mileage tables located in designed Company offices for such purposes. (M) (M)

(M) Material appearing on this page previously appeared on Second Revised Page 377.6.

7. Special Access Service (Cont'd)

7.2 Service Descriptions (Cont'd)

7.2.9 High Capacity Service (Cont'd)

(A) Basic Channel Description (Cont'd)

(2) Fractional DS1 channels provide simultaneous, two-way transmission at contiguous bit rates of 128.1, 256.0 and 384.0 kbps. Fractional DS1 channels operate over the combined bandwidth of adjacent channels to create a contiguous bit rate.

Due to technical limitations associated with the provision of Fractional DS1, this service will be offered only in end offices where a compatible channel bank exists and the distance between the central office and the customer designated premises is less than or equal to 12,000 feet.

(B) Technical Specifications Packages

	Package HC-					
Parameters	0	1	1C	2	3	4
Error-Free Seconds	X	X				

A channel with technical specifications package HC1 will be capable of an error-free seconds performance of 98.75% over a continuous 24 hour period as measured at the 1.544 Mbps rate through a CSU equivalent which is designed, manufactured, and maintained to conform with the specifications contained in Technical Reference ***Publication GR-54***. (C) (C)

(C) Channel Interfaces

The following channel interface (CI) defines the bit rate that is available for a High Capacity channel:

CI	Bit Rate
DS-15	1.544 Mbps (DS1)
DS-44	44.736 Mbps (DS3)

Compatible channel interfaces are set forth in 7.3.5(I) following.

7. Special Access Service (Cont'd)

7.2 Service Descriptions (Cont'd)

7.2.9 High Capacity Service (Cont'd)

(D) Optional Features and Functions

(1) Automatic Loop Transfer

The Automatic Loop Transfer provides protection on a 1xN basis against failure of the facilities between a customer designated premises and the wire center serving that premises. 1xN protection provides one spare channel for up to a maximum of six working channels. Protection is furnished through the use of a switching arrangement that automatically switches to a spare channel when a working channel fails. Spare channel priority is given to the lowest numbered slot based upon slot position. Slot position number one is given highest priority. The spare channel is not included as a part of the option. This option requires compatible equipment at both the serving wire center and the customer premises. The customer is responsible for providing the equipment at its premises. This feature is not available with 1.544 Mbps channels having the B8ZS line code.

(2) Central Office Multiplexing

(a) DS3 to DS1

An arrangement that converts a 44.736 Mbps channel to 28 DS1 channels using digital time division multiplexing.

(b) DS1 to Voice

An arrangement that converts a 1.544 Mbps channel to 24 channels for use with Voice Grade Services. A channel(s) of this DS1 to the Hub can also be used for a Digital Data or WATS Access Line Service.

7. Special Access Service (Cont'd)

7.2 Service Descriptions (Cont'd)

7.2.9 High Capacity Service (Cont'd)

(D) Optional Features and Functions (Cont'd)

(2) Central Office Multiplexing (Cont'd)

(c) DS1 to DS0

An arrangement that converts a 1.544 Mbps channel to 24 64.0 kbps channels utilizing digital time division multiplexing.

(3) Clear Channel Capability

Clear Channel Capability provides an increase in usable bandwidth from 1.344 Mbps to 1.536 Mbps of an unconstrained data stream across the network. Clear Channel Capability is provided only in offices with existing technical capability on 1.544 Mbps High Capacity Service and on multiplexed 44.736 Mbps High Capacity Service, and requires the customer signal at the channel interface to conform to Bipolar with Eight Zero Substitution (B8ZS) line code format as described in Technical Reference ***GR-54 and GR-342.*** Customer equipment must be compatible with this method of providing the unconstrained signal. (C)

CCC is provided on DS1.1.544 Mbps High Capacity channels between two customer designated premises and is subject to the availability of facilities. This optional feature may be ordered at the same time the DS1/1.544 Mbps High Capacity channel is ordered, or it may be ordered as an additional feature of an existing channel. (N) (N)

7. Special Access Service (Cont'd)

7.2 Service Descriptions (Cont'd)

7.2.9 High Capacity Service (Cont'd)

(D) Optional Features and Functions (Cont'd)

(4) ***Reserved for Future Use*** (C) (D)

(D)

7. Special Access Service (Cont'd)

7.2 Service Descriptions (Cont'd)

7.2.9 High Capacity Service (Cont'd)

(D) Optional Features and Functions (Cont'd)

(D)

(D)

(5) Multiplexer Access Service Connection (MASC)

An arrangement that allows one (1) channel of a Multiplexed Company DS1 or DS3 Service to be connected to one (1) channel of the same bit rate and like signaling of another Multiplexed Company DS1 or DS3 Service. The lesser speed channel may be a DS0 or Voice Grade Service between two (2) DS1 Multiplexers or a DS1 Service between two (2) DS3 Multiplexers. MASC will be provided at all Company locations where Multiplexing is performed or between two (2) Company locations where Multiplexing is performed.

7. Special Access Service (Cont'd)

7.2 Service Descriptions (Cont'd)

7.2.9 High Capacity Service (Cont'd)

(D) Optional Features and Functions (Cont'd)

(6) Extended Superframe Format (ESF)

The ESF optional feature is available at suitably equipped end offices, and passes a customer provided framing format for 1.544 Mbps High Capacity Service. ESF extends the customer's 1.544 Mbps framing structure from twelve (12) to twenty-four (24) frames and divides the 8 Kbps 193rd bit position pattern into three (3) distinct functionalities: 2 Kbps for frame synchronization, 2 Kbps for cyclic redundancy checking and 4 Kbps used primarily for performance monitoring information.

7. Special Access Service (Cont'd)

7.2 Service Descriptions (Cont'd)

7.2.9 High Capacity Service (Cont'd)

(D) Optional Features and Functions (Cont'd)

The following table shows the technical specifications packages with which the optional features and functions are available.

	Available with Technical Specifications Package HC-	
	1	3
Automatic Loop Transfer	X	
Central Office Multiplexing:		
DS3 to DS1		X
DS1 to Voice	X	
DS1 to DS0	X	
Transfer Arrangement	X	
Clear Channel Capability	X	X
Multiplexer Access Service Connection	X	X
Extended Superframe Format	X	

(D)

7. Special Access Service (Cont'd)

7.2 Service Descriptions (Cont'd)

7.2.10 Special Access Service Utilized for Connection with Switched Access Service

(A) Basic Service Description

A Special Access Service utilized for connection with a Switched Access Service implemented as a Voice Grade dedicated communications path between the customer's end user and a WATS Serving Office (WSO) equipped with Feature Groups A, B, C or D Service, together, form the functional parts that are the major building blocks of the WATS* Service. Switched Access optional arrangements are available as set forth in 6.3(T) preceding. Both of these functional elements are necessary to provide service from the customer's end user to the customer's designated premises.

A WATS Special Access Circuit (WSAC) may be provided as an originating only, terminating only or two-way (originating and terminating) service, at the option of the customer. If a WSO is not capable of implementing a state-mandated restriction, the WSAC will be extended free of charge to the nearest WSO capable of performing the necessary function.

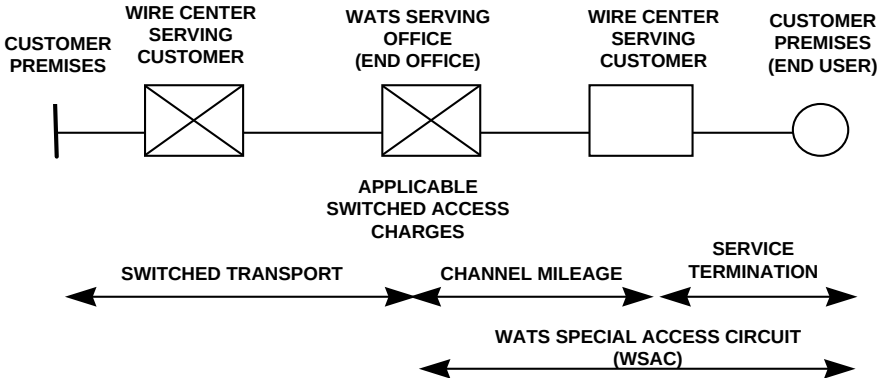

* Use of terms “WATS” and/or “WATS-like” is descriptive only and is not intended to restrict provision of a WSAC to a specific type of service.

7. Special Access Service (Cont'd)

7.2 Service Descriptions (Cont'd)

7.2.10 Special Access Service Utilized for Connection with Switched Access Service (Cont'd)

(B) WATS Special Access Circuit (WSAC)

A WATS Special Access Circuit (WSAC) is comprised of a Service Termination between the customer's end user serving wire center and the customer's end user premises as specified in 7.1.2(A) preceding. If the WSO and the end user's serving wire center are not the same, Channel Mileage as specified in 7.1.2(C) preceding is applicable from the end user's serving wire center to the WSO.

The transmission path is offered as either effective two-wire, effective four-wire or a High Capacity access connection. This service is provided with rotary dial or dual tone multi-frequency address signaling, and with either loop start or ground start signaling. Additionally, other optional features such as improved return loss can be provided.

(C) Voice Grade Service Restrictions

By order of the Public Service Commission of South Carolina in Docket No. 87-29-C, Order Nos. 87-982 and 88-968, the use of bi-jurisdictional WSACs were found to be in the public interest. All 1+ and 0+ intrastate intraLATA traffic originated on a bi-jurisdictional WSAC will be screened and routed by the serving Local Exchange Carrier which shall complete such traffic using its facilities. Intrastate IntraLATA Access Screening, as described in 6.3(T) preceding, will be provided by the Company at no charge. Intrastate intraLATA calling must conform to the rules and regulations of the Public Service Commission of South Carolina.

7. Special Access Service (Cont'd)

7.2 Service Descriptions (Cont'd)

7.2.11 Reserved for Future Use (C)

(D)

(D)

7. Special Access Service (Cont'd)

7.2 Service Descriptions (Cont'd)

7.2.11 Reserved for Future Use (Cont'd) (C)

(D)

(D)

7. Special Access Service (Cont'd)

7.2 Service Descriptions (Cont'd)

7.2.11 Reserved for Future Use (Cont'd) (C)

(D)

(D)

7. Special Access Service (Cont'd)

7.3 Channel Interface and Network Channel Codes

Network Channel Codes are comprised of four characters. The first and second characters describe the technical specifications package within the service type. The third and fourth characters describe and specify options associated with the service. The Telephone Company abides by nationally accepted standards in its use of Network Channel Codes that are available from the Telephone Company upon request. (C)

Channel interface codes describe the electrical characteristics of the interface at the customer's premises. Compatible Channel Interface codes for the requested service must be specified by the customer when ordering the services. Channel Interface codes for each category of Special Access Service can be found in the Technical Reference Publications set forth in 7.2 preceding. (C)

7.3.1 Glossary of Channel Interface Codes and Options

Code	Option	Definition
AB		accepts 20 Hz ringing signal at customer's point of termination
AC		accepts 20 Hz ringing signal at customer’s end user's point of termination
CT		Centrex Tie Trunk Termination
DA		data stream in VF frequency band at customer's end user's point of termination
DB		data stream in VF frequency band at customer’s point of termination

(D)
(D)

7. Special Access Service (Cont'd)

7.3 Channel Interface and Network Channel Codes (Cont'd)

7.3.1 Glossary of Channel Interface Codes and Options (Cont'd)

Code	Option	Definition
DC		direct current or voltage
	- 1	monitoring interface with series RC combination (McCulloh format)
	- 2	Company energized alarm channel
DS		digital hierarchy interface
	- 15	1.544 Mbps (DS1) format per PUB 62411 and Addendum A plus D4
	- 15B	1.544 Mbps (DS1) format per PUB 62411 and Addendum A plus D4 with B8ZS clear channel capability
	- 15E	8-bit PCM encoded in one 64 kbps of the DS1 signal
	- 15F	8-bit PCM encoded in two 64 kbps of the DS1 signal
	- 15G	8-bit PCM encoded in three 64 kbps of the DS1 signal
	- 15H	14/11-bit PCM encoded in six 64 kpbs of the DS1 signal
	- 15J	1.544 Mbps format per PUB 62411 and Addendum A
	- 15K	1.544 Mbps format per PUB 62411 and Addendum A plus extended framing format
	- 15L	1.544 Mbps (DS1) with SF signaling
	- 15S	1.544 Mbps using B8ZS line code and extended framing format
	- 44	44.736 Mbps (DS3)
	- 44L	44.736 Mbps (DS3) with SF signaling

7. Special Access Service (Cont'd)

7.3 Channel Interface and Network Channel Codes (Cont'd)

7.3.1 Glossary of Channel Interface Codes and Options (Cont'd)

Code	Option	Definition	
			(D)
			(D)
DU		digital access interface	
	- 24	2.4 kbps	
	- 48	4.8 kbps	
	- 56	56.0 kbps	
	- 64	64.0 kbps	
	- 96	9.6 kbps	
	- A	1.544 Mbps format per PUB 62411 and Addendum A	
	- B	1.544 Mbps format per PUB 62411 and Addendum A plus D4	
	- C	1.544 Mbps format per PUB 62411 and Addendum A plus extended framing format	
	- D	1.544 Mbps format per PUB 62411 and Addendum A plus D4 with B8ZS clear channel capability	
	- S	1.544 Mbps using B8ZS line code and extended framing format	
DX		duplex signaling interface at customer's point of termination	
DY		duplex signaling interface at customer's end user's point of termination	
EA	- E	Type I E&M Lead Signaling. Customer at POT or customer's end user at POT originates on E Lead.	
EA	- M	Type I E&M Lead Signaling. Customer at POT or customer's end user at POT originates on M Lead.	
EB	- E	Type II E&M Lead Signaling. Customer at POT or customer's end user at POT originates on E Lead.	
EB	- M	Type II E&M Lead Signaling. Customer at POT or customer's end user at POT originates on M Lead.	
EC		Type III E&M signaling at customer POT	
EX	- A	tandem channel unit signaling for loop start or ground start and customer supplies open end (dial tone, etc.) functions	
EX	- B	tandem channel unit signaling for loop start or ground start and customer supplies closed end (dial pulsing, etc.) functions	

7. Special Access Service (Cont'd)

7.3 Channel Interface and Network Channel Codes (Cont'd)

7.3.1 Glossary of Channel Interface Codes and Options (Cont'd)

Code	Option	Definition
GO		ground start loop signaling - open end function by customer or customer's end user
GS		ground start loop signaling - closed end function by customer or customer's end user
IA		E.I.A. (25 pin RS-232)
LA		end user loop start loop signaling - Type A OPS registered port open end
LB		end user loop start loop signaling - Type B OPS registered port open end
LC		end user loop start loop signaling - Type C OPS registered port open end
LO		loop start loop signaling - open end function by customer or customer's end user
LR		20 Hz automatic ringdown interface at customer POT with Company provided PLAR
LS		loop start loop signaling - closed end function by customer or customer's end user
NO		no signaling interface, transmission only
RV	- O	reverse battery signaling, one way operation, originate by customer
	- T	reverse battery signaling, one way operation, terminate function by customer or customer's end user
SF		single frequency signaling with VF band at either customer POT or customer's end user POT
TF		telephotograph interface
TT		teletypewriter interface at either customer POT or customer's end user POT

(D)

* Available only for the transmission of audio tone protective relaying signals used in the protection of electric power systems during fault conditions.

7. Special Access Service (Cont'd)

7.3 Channel Interface and Network Channel Codes (Cont'd)

7.3.1 Glossary of Channel Interface Codes and Options (Cont'd)

Code	Option	Definition
TT	- 2	20.0 milliamperes
	- 6	62.5 milliamperes

(D)

(D)

7. Special Access Service (Cont'd)

7.3 Channel Interface and Network Channel Codes (Cont'd)

(D)

(D)

7.3.2 Impedance

The nominal reference impedance with which the channel will be terminated for the purpose of evaluating transmission performance:

Value (ohms)	Code(s)
110	0
150	1
600	2
900	3
135	5
75	6
124	7
Variable	8
100	9

7. Special Access Service (Cont'd)

7.3 Channel Interface and Network Channel Codes (Cont'd)

7.3.3 Digital Hierarchy Channel Interface Codes (4DS)

Customers selecting the multiplexed four-wire DSX-1 or higher facility interface option at the customer designated premises will be requested to provide subsequent system and channel assignment data. The various digital bit rates in the digital hierarchy employ the channel interface code 4DS9 or 4DS6, plus the speed option indicated below:

Interface Code and Speed Option	Nominal Bit Rate (Mbps)	Digital Hierarchy Level
4DS9-15	1.544	DS1
4DS6-44	44.736	DS3

7.3.4 Service Designator/Network Channel Code Conversion Table

The purpose of this table is to show the relationship between the service designator codes (e.g., VGC, ***DA1***, etc.) and the network channel codes that are used for various administrative purposes: (C)

7. Special Access Service (Cont'd)

7.3 Channel Interface and Network Channel Codes (Cont'd)

7.3.4 Service Designator/Network Channel Code Conversion Table (Cont'd)

	Service Designator Code	Network Channel Code	
Voice			
	VGC	***UQ***	(C)
	VG1	LB	
	VG2	LC	
	VG3	LD	
	VG4	LE	
	VG5	LF	
	VG6	LG	
	VG7	LH	
	VG8	LJ	
	VG9	LK	
	VG10	LN	
	VG11	LP	
	VG12	LR	

7. Special Access Service (Cont'd)

7.3 Channel Interface and Network Channel Codes (Cont'd)

7.3.4 Service Designator/Network Channel Code Conversion Table (Cont'd)

(D)

(D)

	Service Designator Code	Network Channel Code
Digital Data		
	DA1	XA
	DA2	XB
	DA3	XG
	DA4	XH
High Capacity		
	HC0	HS
	HC1	HC
	HC3	HF

7.3.5 Compatible Channel Interfaces

The following tables show the channel interface codes (CIs) which are compatible:

(A) Reserved For Future Use

7. Special Access Service (Cont'd)

7.3 Channel Interface and Network Channel Codes (Cont'd)

7.3.5 Compatible Channel Interfaces (Cont'd)

(B) ***Reserved For Future Use*** (C)

(D)

(D)

7. Special Access Service (Cont'd)

7.3 Channel Interface and Network Channel Codes (Cont'd)

7.3.5 Compatible Channel Interfaces (Cont'd)

(C) Voice Grade

Compatible CIs		Compatible CIs		Compatible CIs	
4AB2	4AB2				
4AB2	4AC2	4AH5-B	6DA2	4AH6-D	2DY2
4AB3	4AC2	4AH5-B	4DA2	4AH6-C	9DY2
4AB2	2AC2	4AH5-B	2DA2	4AH6-C	9DY3
4AB3	2AC2			4AH6-C	6DY2
2AB2	2AC2	4AH6-D	4DE2	4AH6-C	6DY3
2AB3	2AC2	4AH6-C	4DE2	4AH6-C	4DY2
4AB2	4SF2	4AH5-B	4DE2	4AH6-C	2DY2
4AB3	4SF2	4AH6-D	2DE2	4AH5-B	9DY2
4AC2	4AC2	4AH6-C	2DE2	4AH5-B	9DY3
4AC2	2AC2	4AH5-B	2DE2	4AH5-B	6DY2
4AH6-D	4AC2			4AH5-B	6DY3
4AH6-D	2AC2	4AH6-D	4DX3	4AH5-B	4DY2
4AH6-C	4AC2	4AH6-C	4DX3	4AH5-B	2DY2
4AH6-C	2AC2	4AH5-B	4DX3		
4AH5-B	4AC2	4AH6-D	4DX2	4AH6-D	9EA2
4AH5-B	2AC2	4AH6-C	4DX2	4AH6-D	9EA3
		4AH5 B	4DX2	4AH6-D	6EA2-E
4AH6-D	2CT3			4AH6-D	6EA2-M
4AH6-C	2CT3	4AH6-D	9DY2	4AH6-D	4EA2-E
4AH5-B	2CT3	4AH6-D	9DY3	4AH6-D	4EA2-M
4AH6-D	6DA2	4AH6-D	6DY2	4AH6-C	9EA2
4AH6-D	4DA2	4AH6-D	6DY3	4AH6-C	9EA3
4AH6-D	2DA2	4AH6-D	4DY2	4AH6-C	6EA2-E
4AH6-C	6DA2				
4AH6-C	4DA2				
4AH6-C	2DA2				

7. Special Access Service (Cont'd)

7.3 Channel Interface and Network Channel Codes (Cont'd)

7.3.5 Compatible Channel Interfaces (Cont'd)

(C) Voice Grade (Cont'd)

Compatible CIs		Compatible CIs		Compatible CIs	
4AH6-C	6EA2-M	4AH6-D	6GS2	4AH6-D	2LO2
4AH6-C	4EA2-E	4AH6-D	4GS2	4AH6-C	2LO3
4AH6-C	4EA2-M	4AH6-D	2GS3	4AH6-C	2LO2
4AH5-B	9EA2	4AH6-D	26S2	4AH5-B	2LO3
4AH5-B	9EA3	4AH6-C	6GS2	4AH5-B	2LO2
4AH5-B	6EA2-E	4AH6-C	4GS2		
4AH5-B	6EA2-M	4AH6-C	2GS3	4AH6-D	4LR2
4AH5-B	4EA2-E	4AH6-C	2GS2	4AH6-D	2LR2
4AH5-B	4EA2-M	4AH5-B	6GS2	4AH6-C	4LR2
		4AH5-B	4GS2	4AH6-C	2LR2
4AH6-D	8EB2-E	4AH5-B	2GS3	4AH5-B	4LR2
4AH6-D	8EB2-M	4AH5-B	2GS2	4AH5-B	2LR2
4AH6-D	6EB2-E				
4AH6-D	6EB2-M	4AH6-D	2LA2	4AH6-D	6LS2
4AH6-C	8EB2-E	4AH6-C	2LA2	4AH6-D	4LS2
4AH6-C	8EB2-M	4AH5-B	2LA2	4AH6-D	2LS2
4AH6-C	6EB2-E			4AH6-D	2LS3
4AH6-C	6EB2-M	4AH6-D	2LB2	4AH6-C	6LS2
4AH5-B	8EB2-E	4AH6-C	2LB2	4AH6-C	4LS2
4AH5-B	8EB2-M	4AH5-B	2LB2	4AH6-C	2LS2
4AH5-B	6EB2-E			4AH6-C	2LS3
4AH5-B	6EB2-M	4AH6-D	2LC2	4AH5-B	6LS2
		4AH6-C	2LC2	4AH5-B	4LS2
4AH6-D	2GO2	4AH5-B	2LC2	4AH5-B	2LS2
4AH6-D	2GO3			4AH5-B	2LS3
4AH6-C	2GO2	4AH6-D	2LO3		
4AH6-C	2GO3				
4AH5-B	2GO2				
4AH5-B	2GO3				

7. Special Access Service (Cont'd)

7.3 Channel Interface and Network Channel Codes (Cont'd)

7.3.5 Compatible Channel Interfaces (Cont'd)

(C) Voice Grade (Cont'd)

Compatible CIs		Compatible CIs		Compatible CIs		
4AH6-D	4NO2	4AH6-D	4TF2	2CT3	6EB2-E	
4AH6-D	2NO2	4AH6-D	2TF2	2CT3	6EB2-M	
4AH6-C	4NO2	4AH6-C	4TF2	2CT3	6EB3-E	
4AH6-C	2NO2	4AH6-C	2TF2			
4AH5-B	4N02	4AH5-B	4TF2	2CT3	8EB2-E	
4AH5-B	2NO2	4AH5-B	2TF2	2CT3	8EB2-M	
		2CT3	2CT3			(D)
		2CT3	4DS9-*	2CT3	8EC2	
		2CT3	6DX2	2CT3	4SF2	
		2CT3	4DX2	2CT3	4SF3	
		2CT3	4DX3			(D)
4AH6-D	4RV2-T	2CT3	9DY3			
4AH6-D	2RV2-T	2CT3	6DY3			
4AH6-C	4RV2-T	2CT3	9DY2			
4AH6-C	2RV2-T	2CT3	6DY2			
4AH5-B	4RV2-T	2CT3	4DY2			
4AH5-B	2RV2-T	2CT3	2DY2			
4AH6-D	4SF2	2CT3	9EA3			
4AH6-C	4SF2	2CT3	9EA2			
4AH5-B	4SF2	2CT3	6EA2-E			
4AH6-D	4SF3	2CT3	6EA2-M			
4AH6-C	4SF3	2CT3	4EA2-E			
4AH5-B	4SF3	2CT3	4EA2-M			

* See 7.3.3 preceding for explanation.

7. Special Access Service (Cont'd)

7.3 Channel Interface and Network Channel Codes (Cont'd)

7.3.5 Compatible Channel Interfaces (Cont'd)

(C) Voice Grade (Cont'd)

Compatible CIs		Compatible CIs		
		4DS9-*	4AC2	
		4DS9-*	2AC2	
		4DS9-*	6DA2	
		4DS9-*	4DA2	
6DA2	6DA2	4DS9-*	2DA2	
6DA2	4DA2			
6DA2	2DA2	4DS9-*	4DE2	
4DA2	4DA2	4DS9-*	2DE2	
4DA2	2DA2			
2DA2	2DA2	4DS9-*	4DX3	
4DB2	6DA2	4DS9-*	4DX2	
4DB2	4DA2			
4DB2	2DA2	4DS9-*	9DY3	
2DB3	2DA2	4DS9-*	9DY2	
2DB2	2DA2	4DS9-*	6DY3	
4DB2	4DB2	4DS9-*	6DY2	
4DB2	4NO2	4DS9-*	4DY2	
4DB2	2NO2	4DS9-*	2DY2	
2DB2	2NO2			
		4DS9-*	9EA2	
		4DS9-*	9EA3	(D)
		4DS9-*	6EA2-E	|
		4DS9-*	6EA2-M	(D)
		4DS9-*	4EA2-E	
4DD3	4DE2	4DS9-*	4EA2-M	
4DD3	2DE2			

* See 7.3.3 preceding for explanation.

7. Special Access Service (Cont'd)

7.3 Channel Interface and Network Channel Codes (Cont'd)

7.3.5 Compatible Channel Interfaces (Cont'd)

(C) Voice Grade (Cont'd)

Compatible CIs		Compatible CIs		Compatible CIs		
4DS9-*	8EB2-E	4DS9-*	4NO2	4DX3	9DY2	
4DS9-*	8EB2-M	4DS9-*	2NO2	4DX2	6DY3	
4DS9-*	6EB2-E			4DX3	6DY3	
4DS9-*	6EB2-M			4DX2	6DY2	(D)
				4DX3	6DY2	(D)
4DS9-*	2GO2			4DX2	4DY2	
4DS9-*	2G03	4DS9-*	4RV2-T	4DX3	4DY2	
4DS9-*	6GS2	4DS9-*	2RV2-T	4DX2	2DY2	
4DS9-*	4DS2			4DX3	2DY2	
4DS9-*	2GS2	4DS9-*	4SF2			
4DS9-*	2GS3	4DS9-*	4SF3	6DX2	9EA3	
				6DX2	9EA2	
4DS9-*	2LA2	4DS9-*	4TF2	6DX2	6EA2-E	
		4DS9-*	2TF2	6DX2	6EA2-M	
4DS9-*	2LB2			6DX2	4EA2-E	
		4DX2	4DX2	6DX2	4EA2-M	
4DS9-*	2LC2	4DX2	4DX2	4DX2	9EA2	
		4DX3	4DX3	4DX3	9EA2	
4DS9-*	2LO2			4DX2	9EA3	
4DS9-*	2LO3	6DX2	9DY3	4DX3	9EA3	
		6DX2	9DY2	4DX2	6EA2-E	
4DS9-*	4LR2	6DX2	6DY3	4DX3	6EA2-E	
4DS9-*	2LR2	6DX2	6DY2	4DX2	6EA2-M	
		6DX2	4DY2	4DX3	6EA2-M	
4DS9-*	6LS2	6DX2	2DY2	4DX2	4EA2-E	
4DS9-*	4LS2	4DX2	9DY3	4DX3	4EA2-E	
4DS9-*	2LS2	4DX3	9DY3	4DX2	4EA2-M	
4DS9-*	2LS3	4DX2	9DY2	4DX3	4EA2-M	

*See 7.3.3 preceding for explanation.

7. Special Access Service (Cont'd)

7.3 Channel Interface and Network Channel Codes (Cont'd)

7.3.5 Compatible Channel Interfaces (Cont'd)

(C) Voice Grade (Cont'd)

Compatible CIs		Compatible CIs		Compatible CIs	
6DX2	8EB2-E	4DX2	6LS2	9DY2	6DY3
6DX2	8EB2-M	4DX3	6LS2	9DY3	4DY2
6DX2	6EB2-E	4DX3	4LS2	9DY2	4DY2
6DX2	6EB2-M	4DX2	4LS2	9DY2	2DY2
4DX2	8EB2-E	4DX3	2LS3	9DY3	2DY2
4DX2	8EB2-M	4DX2	2LS3	6DY3	6DY3
4DX3	8EB2-E	4DX3	2LS2	6DY3	6DY2
4DX3	8EB2-M	4DX2	2LS2	6DY2	6DY2
4DX2	6EB2-E	2DX3	2LS2	6DY3	4DY2
4DX2	6EB2-M	2DX3	2LS3	6DY3	2DY2
4DX3	6EB2-E			6DY2	4DY2
4DX3	6EB2-M	4DX3	4RV2-T	6DY2	2DY2
		4DX2	4RV2-T	4DY2	2DY2
4DX2	2LA2	4DX3	2RV2-T	4DY2	4DY2
4DX3	2LA2	4DX2	2RV2-T	2DY2	2DY2
2DX3	2LA2			6EA2-E	4AC2
		6DX2	4SF2	6EA2-M	4AC2
4DX2	2LB2	4DX2	4SF2	6EA2-E	2AC2
4DX3	2LB2	4DX3	4SF2	6EA2-M	2AC2
4DX3	2LB2	4DX2	4SF3		
		4DX3	4SF3	9EA2	9DY3
4DX2	2LC2			9EA2	9DY2
4DX3	2LC2	9DY3	9DY3	9EA2	6DY3
4DX3	2LC2	9DY3	9DY2	9EA2	6DY2
		9DY2	9DY2	9EA2	4DY2
4DX2	2LO3	9DY3	6DY3	9EA2	2DY2
4DX3	2LO3	9DY3	6DY2	9EA3	9DY3
2DX3	2LO3	9DY2	6DY2		

7. Special Access Service (Cont'd)

7.3 Channel Interface and Network Channel Codes (Cont'd)

7.3.5 Compatible Channel Interfaces (Cont'd)

(C) Voice Grade (Cont'd)

Compatible CIs		Compatible CIs		Compatible CIs	
9EA3	9DY2	4EA2-M	9DY2	4EA3-E	9EA2
9EA3	6DY3	4EA2-M	6DY3	4EA3-E	9EA3
9EA3	6DY2	4EA2-M	6DY2	4EA2-M	4EA2-M
9EA3	4DY2	4EA2-M	4DY2		
9EA3	2DY2	4EA2-M	2DY2	9EA2	8EB2-E
6EA2-E	9DY3			9EA2	8EB2-M
6EA2-E	9DY2	9EA2	9EA2	9EA2	6EB2-E
6EA2-E	6DY3	9EA2	9EA3	9EA2	6EB2-M
6EA2-E	6DY2	9EA2	6EA2-E	9EA3	9EB2-E
6EA2-E	4DY2	9EA2	6EA2-M	9EA3	8EB2-M
6EA2-E	2DY2	9EA2	4EA2-E	9EA3	6EB2-E
6EA2-M	9DY3	9EA2	4EA2-M	9EA3	6EB2-M
6EA2-M	9DY2	9EA3	9EA3	6EA2-E	8EB2-E
6EA2-M	6DY3	9EA3	6EA2-E	6EA2-E	8EB2-M
6EA2-M	6DY2	9EA3	6EA2-M	6EA2-E	6EB2-E
6EA2-M	4DY2	9EA3	4EA2-E	6EA2-E	6EB2-M
6EA2-M	2DY2	9EA3	4EA2-M	6EA2-M	8EB2-E
4EA2-E	9DY3	6EA2-E	6EA2-E	6EA2-M	8EB2-M
4EA2-E	9DY2	6EA2-E	6EA2-M	6EA2-M	6EB2-E
4EA3-E	9DY3	6EA2-M	6EA2-M	6EA2-M	6EB2-M
4EA3-E	9DY2	6EA2-E	4EA2-E	4EA2-E	8EB2-E
4EA3-E	6DY3	6EA2-E	4EA2-M	4EA2-E	8EB2-M
4EA3-E	6DY2	6EA2-M	4EA2-E	4EA3-E	9EB2-E
4EA3-E	4DY2	6EA2-M	4EA2-M	4EA3-E	8EB2-M
4EA3-E	2DY2	4EA2-E	4EA2-E	4EA2-E	6EB2-E
4EA2-E	6DY3	4EA3-E	6EA2-E	4EA2-E	6EB2-M
4EA2-E	6DY2	4EA3-E	6EA2-M	4EA3-E	6EB2-E
4EA2-E	4DY2	4EA3-E	4EA2-E	4EA3-E	6EB2-M
4EA2-E	2DY2	4EA3-E	4EA2-M	4EA2-M	8EB2-E
4EA2-M	9DY3	4EA2-E	4EA2-M		

7. Special Access Service (Cont'd)

7.3 Channel Interface and Network Channel Codes (Cont'd)

7.3.5 Compatible Channel Interfaces (Cont'd)

(C) Voice Grade (Cont'd)

Compatible CIs		Compatible CIs		Compatible CIs	
4EA2-M	8EB2-M	9EA3	4SF2	6EB3-E	9DY2
4EA2-M	6EB3-E	9EA2	4SF2	6EB3-E	9DY3
4EA2-M	6EB2-M	6EA2-E	4SF3	6EB2-E	6DY2
		6EA2-M	4SF3	6EB3-E	6DY2
6EA2-E	2LA2	6EA2-E	4SF2	6EB2-E	6DY3
6EA2-M	2LA2	6EA2-M	4SF2	6EB3-E	6DY3
		4EA3-E	4SF2	6EB2-E	4DY2
6EA2-E	2LB2	4EA2-E	4SF2	6EB3-E	2DY2
6EA2-M	2LB2	4EA2-M	4SF2	6EB3-E	4DY2
				6EB2-M	9DY2
6EA2-E	2LC2	8EB2-E	4AC2	6EB2-M	9DY3
6EA2-M	2LC2	8EB2-M	4AC2	6EB2-M	6DY2
		8EB2-E	2AC2	6EB2-M	6DY3
6EA2-E	2LO3	8EB2-M	2AC2	6EB2-M	4DY2
6EA2-M	2LO3			6EB2-E	2DY2
		8EB2-E	9DY3	6EB2-M	2DY2
6EA2-E	6LS2	8EB2-E	9DY2		
6EA2-M	6LS2	8EB2-E	6DY3	6EB3-E	9EA2
6EA2-E	4LS2	8EB2-E	6DY2	6EB3-E	9EA3
6EA2-M	4LS2	8EB2-E	4DY2	6EB3-E	6EA2-E
6EA2-E	2LS2	8EB2-E	2DY2	6EB3-E	6EA2-M
6EA2-M	2LS2	8EB2-M	9DY3	6EB3-E	4EA2-E
6EA2-E	2LS3	8EB2-M	9DY2	6EB3-E	4EA2-M
6EA2-M	2LS3	8EB2-M	6DY3		
		8EB2-M	6DY2	8EB2-E	8EB2-E
6EA2-E	4RV2-T	8EB2-M	4DY2	8EB2-E	8EB2-M
6EA2-M	4RV2-T	8EB2-M	2DY2	8EB2-M	8EB2-M
6EA2-E	2RV2-T	6EB2-E	9DY2	8EB2-E	6EB2-E
6EA2-M	2RV2-T	6EB2-E	9DY3	8EB2-E	6EB2-M

7. Special Access Service (Cont'd)

7.3 Channel Interface and Network Channel Codes (Cont'd)

7.3.5 Compatible Channel Interfaces (Cont'd)

(C) Voice Grade (Cont'd)

Compatible CIs		Compatible CIs		Compatible CIs	
8EB2-M	6EB2-E	8EB2-E	4RV2-T	8EC2	8EB2-M
8EB2-M	6EB2-M	8EB2-M	4RV2-T	8EC2	6EB2-E
6EB2-E	6EB2-E	8EB2-E	2RV2-T	8EC2	6EB2-M
6EB2-E	6EB2-M	8EB2-M	2RV2-T		
6EB3-E	8EB2-E			8EC2	4SF2
6EB3-E	8EB2-M	8EB2-E	4SF2	6EX2-B	2GO3
6EB2-M	6EB2-M	8EB2-M	4SF2	6EX2-A	6GS2
		8EB2-E	4SF3	6EX2-A	4GS2
8EB2-E	2LAC2	8EB2-M	4SF3	6EX2-A	2GS2
8EB2-M	2LAC2	6EB3-E	4SF2	6EX2-A	2GS3
		6EB2-E	4SF2		
8EB2-E	2LB2	6EB2-M	4SF2	6EX2-B	2LA2
8EB2-M	2LB2				
		8EC2	9DY2	6EX2-B	2LB2
8EB2-E	2LC2	8EC2	9DY3		
8EB2-M	2LC2	8EC2	6DY2	6EX2-B	2LC2
		8EC2	6DY3		
8EB2-E	2LO3	8EC2	4DY2	6EX2-B	2LO2
8EB2-M	2LO3	8EC2	2DY2	6EX2-B	2LO3
8EB2-E	6LS2	8EC2	9EA2	6EX2-B	4LR2
8EB2-M	6LS2	8EC2	9EA3	6EX2-B	4LR2
8EB2-E	4LS2	8EC2	6EA2-E		
8EB2-M	4LS2	8EC2	6EA2-M	6EX2-A	6LS2
8EB2-E	2LS2	8EC2	4EA2-E	6EX2-A	4LS2
8EB2-M	2LS2	8EC2	4EA2-M	6EX2-A	2LS2
8EB2-E	2LS3			6EX2-A	2LS3
8EB2-M	2LS3	8EC2	8EB2-E		

7. Special Access Service (Cont'd)

7.3 Channel Interface and Network Channel Codes (Cont'd)

7.3.5 Compatible Channel Interfaces (Cont'd)

(C) Voice Grade (Cont'd)

Compatible CIs		Compatible CIs		Compatible CIs	
6EX2-A	4SF2	6LO2	6LS2	4LR2	4SF2
6EX2-B	4SF2	6LO2	4LS2	4LR3	4SF2
		6LO2	2LS2		
6GO2	6GS2	6LO2	2LS3	6LS2	2LA2
6GO2	4GS2	4LO2	6LS2	4LS2	2LA2
6GO2	2GS2	4LO2	4LS2	4LS3	2LA2
6GO2	2GS3	4LO3	6LS2	2LS2	2LA2
4GO2	6GS2	4LO3	4LS2	2LS3	2LA2
4GO3	6GS2	4LO3	2LS3		
4GO2	4GS2	4LO3	2LS2	6LS2	2LB2
4GO3	4GS2	4LO2	2LS2	4LS2	2LB2
4GO2	2GS2	4LO2	2LS3	4LS3	2LB2
4GO2	2GS3	2LO3	2LS3	2LS2	2LB2
4GO3	2GS2	2LO3	2LS2	2LS3	2LB2
4GO3	2GS3	2LO2	2LS2		
2GO2	2GS2	2LO2	2LS3	6LS2	2LC2
2GO3	2GS2			4LS2	2LC2
2GO2	2GS3	6LO2	4SF2	4LS3	2LC2
2GO3	2GS3	4LO2	4SF2	2LS2	2LC2
		4LO3	4SF2	2LS3	2LC2
6GO2	4SF2				
4GO2	4SF2	4LR3	4LR2	6LS2	2LO3
4GO3	4SF2	4LR3	2LR2	6LS2	2LO2
		4LR2	4LR2	4LS2	2LO2
6GS2	2GO2	4LR2	2LRS	4LS2	2LO3
4GS2	4GO2	2LR2	2LR2	4LS3	2LO2
4GS3	2GO2	2LR3	2LRS	4LS3	2LO3
4GS2	2GO3				

7. Special Access Service (Cont'd)

7.3 Channel Interface and Network Channel Codes (Cont'd)

7.3.5 Compatible Channel Interfaces (Cont'd)

(C) Voice Grade (Cont'd)

Compatible CIs		Compatible CIs		Compatible CIs		
6LS2	4SF2	4SF3	9DY2	4SF3	2LA2	
4LS3	4SF2	4SF2	9DY3			
		4SF3	6DY3	4SF2	2LB2	
4NO2	6DA2	4SF2	6DY2	4SF3	2LB2	
4NO2	4DA2	4SF2	6DY3			
4NO2	2DA2	4SF3	6DY2	4SF2	2LC2	
2NO2	6DA2	4SF2	4DY2	4SF3	2LC2	
2NO2	4DA2	4SF3	4DY2			
2NO2	2DA2	4SF3	2DY2	4SF2	2LO3	
4NO2	4DE2	4SF2	2DY2	4SF3	2LO3	
4NO2	2DE2					
4NO2	4NO2	4SF3	9EA2	4SF2	2LR2	
4NO2	2NO2	4SF3	9EA3	4SF3	4LR2	
2NO2	2NO2	4SF3	4EA2-E	4SF3	2LR2	
2NO3	2NO2	4SF3	4EA2-M			
				4SF3	6LS2	
		4SF3	6EB2-E	4SF2	4LS2	(D)
		4SF3	6EB2-M	4SF3	4LS2	
4RV2-O	4RV2-T	4SF2	2GO3	4SF2	2LS2	
4RV2-O	2RV2-T	4SF3	6GS2	4SF2	2LS3	
2RV2-O	2RV2-T	4SF2	6GS2	4SF3	2LS2	
		4SF2	4GS2	4SF3	2LS3	
4RV2-O	4SF2	4SF3	4GS2			
		4SF2	2GS2	4SF3	4RV2-T	
4SF2	4AC2	4SF2	2GS3	4SF2	4RV2-T	
4SF2	2AC2	4SF3	2GS2	4SF2	2RV2-T	
		4SF3	2GS3	4SF3	2RV2-T	
4SF3	9DY3					
4SF2	9DY2	4SF2	2LA2	4SF3	4SF3	

7. Special Access Service (Cont'd)

7.3 Channel Interface and Network Channel Codes (Cont'd)

7.3.5 Compatible Channel Interfaces (Cont'd)

(C) Voice Grade (Cont'd)

Compatible CIs	
4SF3	4SF2
4SF2	4SF2
4TF2	4TF2
4TF2	2TF2
2TF3	2TF2

(D) Reserved For Future Use

7. Special Access Service (Cont'd)

7.3 Channel Interface and Network Channel Codes (Cont'd)

7.3.5 Compatible Channel Interfaces (Cont'd)

(E) Reserved For Future Use

(F) Reserved For Future Use

(G) ***Reserved For Future Use*** (C)

(D)

(D)

7. Special Access Service (Cont'd)

7.3 Channel Interface and Network Channel Codes (Cont'd)

7.3.5 Compatible Channel Interfaces (Cont'd)

(H) Digital Data

Compatible CIs		Compatible CIs		Compatible CIs		
4DS9-15	4DS9-15+	4DS9-15	6DU5-24	4DU5-48	4DU5-48	
4DS9-15	4DU5-19	***4DS9-15***	***6DU5-64***	4DU5-56	4DU5-56	(C)
4DS9-15	4DU5-24	4DS8-15	6DU5-48	4DU5-96	4DU5-96	
4DS9-15	4DU5-48	4DS8-15	6DU5-56	6DU5-24	6DU5-24	
4DS9-15	4DU5-56	4DS8-15	6DU5-96	6DU5-48	6DU5-48	
4DS9-15	***4DU5-64***	4DU5-19	4DU5-19	6DU5-56	6DU5-56	(C)
4DS9-15	4DU5-96	4DU5-24	4DU5-24	6DU5-96	6DU5-96	

(I) High Capacity

Compatible CIs			Compatible CIs		
4DS6-44	4DS6-44		4DS9-15	6DU8-B	
4DS6-44	6DU8-A,B or C		4DS9-15	4DU8-B	
4DS6-44	4DU8-A,B or C		4DS9-15J	6DU8-A	
4DS6-15	4DS9-15++		4DS9-15J	4DU8-A	
4DS9-15J	4DS9-15J		4DS9-15K	6DU8-B	
4DS9-15K	4DS9-15K		4DS9-15K	4DU8-B	
4DS9-15S	4DS9-15S		4DS9-15K	6DU8-C	
		(D)	4DS9-15K	4DU8-C	(D)
			4DS9-15S	4DU9-S	
					(D)

\+ Available only as a cross connect of two digital channels at appropriate digital speeds at a Company Hub.

++ Available also as a cross connect of two individual channels of 1.544 Mbps facilities at a Company Hub.

7. Special Access Service (Cont'd)

7.4 Rate Regulations

This section contains the specific regulations governing the rates and charges that apply for Special Access Service.

7.4.1 Types of Rates and Charges

There are two types of rates and charges. These are monthly rates and nonrecurring charges. The rates and charges are described as follows:

(A) Monthly Rates

Monthly rates are flat recurring rates that apply each month or fraction thereof that a Special Access Service is provided. For billing purposes, each month is considered to have 30 days.

(B) Reserved For Further Use

7. Special Access Service (Cont'd)

7.4 Rate Regulations (Cont'd)

7.4.1 Types of Rates and Charges (Cont'd)

(C) Nonrecurring Charges

Nonrecurring charges are one-time charges that apply for specific work activity (i.e., installation or change to an existing service). The types of nonrecurring charges that apply for Special Access Service are: installation of service, installation of optional features and functions, and service rearrangements.

(1) Installation of Service

Nonrecurring charges apply to each service installed. The nonrecurring charges for the installation of service are set forth in 7.5 following as a nonrecurring charge for the Service Termination rate element.

(2) Installation of Optional Features and Functions

Nonrecurring charges apply for the installation of some of the optional features and functions available with Special Access Service. The charge applies whether the feature or function is installed coincident with the initial installation of service or at any time subsequent to the installation of the service.

The optional features and functions for which nonrecurring charges apply are set forth ***in 7.5.3, 7.5.8*** and 7.5.9 following (C)

7. Special Access Service (Cont'd)

7.4 Rate Regulations (Cont'd)

7.4.1 Types of Rates and Charges (Cont'd)

(C) Nonrecurring Charges (Cont'd)

(3) Service Rearrangements

Service rearrangements are changes to existing (installed) services which do not result in either a change in the minimum period requirements as set forth in 5.2.5(E) preceding or a change in the physical location of the point of termination at a customer designated premises. Changes in the type of service or service termination are treated as disconnects and starts. Changes in the physical location of the point of the termination are treated as moves and are described and charged for as set forth in 7.4.5 following.

The nonrecurring charges associated with upgrades in capacity (i.e., multiple DS0s converting to DS1s or multiple DS1s converting to DS3s) will not apply when the customer maintains the same customer premises location. Requests to add or change optional features will be subject to the nonrecurring charges associated with the features requested.

The charge to the customer for the service rearrangement is dependent on whether the change is administrative only in nature or involves actual physical change to the service.

Administrative changes will be made without charge(s) to the customer. Such changes require the continued provision and billing of the Access Service to the same entity (i.e., customer remains responsible for the Access Service). Administrative changes are as follows:

- Change of customer name (i.e., the customer of record does not change, but rather the customer of record changes its name--e.g., AT&T-Long Lines to AT&T Communications),
- Change of customer or customer's end user premises address when the change of address is not a result of a physical relocation of equipment,
- Change in billing data (name, address, or contact name or telephone number),

7. Special Access Service (Cont'd)

7.4 Rate Regulations (Cont'd)

7.4.1 Types of Rates and Charges (Cont'd)

(C) Nonrecurring Charges (Cont'd)

(3) Service Rearrangements (Cont'd)

- Change of agency authorization,
- Change of customer circuit identification,
- Change of billing account number,
- Change of customer test line number,
- Change of customer or customer's end user contract name or telephone number, and
- Change of jurisdiction.

All other service rearrangements will be charged for as follows:

- If the change involves the addition of another leg to an existing multipoint service, the nonrecurring charge for the Service Termination rate element will apply. The charge will apply only for the leg that is being added.

- If the change involves the addition of an optional feature or function which has a separate nonrecurring charge, that nonrecurring charge will apply.

- If the change involves changing the type of signaling on a Voice Grade Service, a charge equal to the Voice Grade Service Termination rate element nonrecurring charge will apply. The charge will apply per Service Termination affected.

- For all other changes, including the addition of optional features without separate nonrecurring charges, a charge equal to one-half (1/2) the Service Termination rate element nonrecurring charge will apply. Only one (1)such charge will apply per service, per change.

7. Special Access Service (Cont'd)

7.4 Rate Regulations (Cont'd)

7.4.1 Types of Rates and Charges (Cont'd)

(C) Nonrecurring Charges (Cont'd)

(3) Service Rearrangements (Cont'd)

- If the change involves connecting an existing service to a Multiplexed High Capacity Service, a charge equal to one-half (1/2) the Service Termination rate element nonrecurring charge will apply for the existing service per service connected.

(D)

(D)

7. Special Access Service (Cont'd)

7.4 Rate Regulations (Cont'd)

7.4.2 Surcharge for Special Access Service

(A) General

In addition to the rates and charges described in 7.4.1 preceding, there is a monthly surcharge that applies to Special Access Service. The Special Access Surcharge compensates the Company for use of the local exchange network when Special Access Service is connected to a PBX or equivalent device which is capable of interconnecting the Special Access Service with local exchange service.

The Company will automatically bill the surcharge on each Special Access Service installed irrespective of whether the interconnection capability exists in the customer's premises equipment or in a Centrex-CO type switch unless written certification is received from the customer certifying exemption status as set forth in (B) following.

(B) Special Access Surcharge Exemptions

The Special Access Service will be exempted from the surcharge if the customer provides the Company written certification that the Special Access Service termination is one of the following:

(1) an open-end termination in a Company switch of an FX line, including CCSA and CCSA-equivalent ONALs; or

7. Special Access Service (Cont'd)

7.4 Rate Regulations (Cont'd)

7.4.2 Surcharge for Special Access Service (Cont'd)

(B) Special Access Surcharge Exemptions (Cont'd)

(2) a termination used for TELEX service; or

(3) a termination that by the nature of its operating characteristics could not make use of Company common lines; or

(4) a termination that interconnects either directly or indirectly to the local exchange network where the usage is subject to Carrier Common Line charges such as, where the Special Access Service accesses only FGA and no local exchange lines, or Special Access Service between customer points of termination or Special Access Service connecting CCSA or CCSA-type equipment (inter-machine trunks); or

(5) a termination that the customer certifies to the Company is not connected to a PBX or other device capable of interconnecting the special access facility to a local exchange subscriber line.

(C) Exemption Certification

(1) Special Access Services which are terminated as set forth in (B) preceding will be exempted for the Special Access Surcharge if the customer provides the Company with a written notification certifying exemption. Such notification shall be provided by the customer (1) at the time the Special Access Service is ordered or installed; (2) at such time as the Special Access Service is reterminated to a device not capable of interconnecting to the local exchange network, or (3) at such time as the Special Access Service becomes associated with a Switched Access Service that is subject to Carrier Common Line charges.

7. Special Access Service (Cont'd)

7.4 Rate Regulations (Cont'd)

7.4.2 Surcharge for Special Access Service (Cont'd)

(C) Exemption Certification (Cont'd)

(2) If written certification is not received at the time the Special Access Service is obtained, the surcharge will be applied. Exempt status will become effective on the certification date indicated by the customer, subject to the regulations in (D) following.

(3) The exemption certification is to be provided by the customer ordering the service. The certification must be signed by the customer or authorized representative and include the category of exemption, as set forth in (B) preceding, for each termination, and the date which the exemption is effective.

(4) The customer shall also notify the Company when an exempted Special Access Service is changed or reterminated such that the exemption is no longer applicable.

(D) Crediting the Surcharge

The Company will cease billing the Special Access Surcharge when certification that the Special Access Service has become exempt from the surcharge, as set forth in (B) preceding. If the status of the Special Access Service was changed prior to receipt of the exemption certification, the Company will credit the customer's account, not to exceed ninety (90) days, based on the effective date of the change specified by the customer in the letter of certification.

7. Special Access Service (Cont'd)

7.4 Rate Regulations (Cont'd)

7.4.2 Surcharge for Special Access Service (Cont'd)

(E) Application of Rates

(1) The monthly Special Access Surcharge applies to Special Access Services arranged, as set forth in (A) preceding, on a per voice equivalent basis as shown in the following example.

	Special Access Service	Voice Grade Equivalent	Monthly Surcharge	Charge
Voice Grade	1	X	$25	$ 25.00
High Capacity DS1	24	X	$25	$600.00

(2) In the case of multipoint Special Access Service, one Special Access Surcharge will apply for each termination at a customer designated premises except that no surcharge applies at the customer designated premises at which the Access Service is connected to Interstate Service.

(3) The Company will bill the surcharge to the customer who orders the Special Access Service unless the Service is exempt as set forth in (B) preceding.

7. Special Access Service (Cont'd)

7.4 Rate Regulations (Cont'd)

7.4.3 Reserved For Future Use

7.4.4 Minimum Periods

The minimum service period for all services is one month.

7.4.5 Moves

A move involves a change in the physical location of one of the following:

- The Point of Termination at the customer's premises
- The customer's premises

The charges for the move are dependent on whether the move is to a new location within the same building or to a different building.

(A) Moves Within the Same Building

When the move is to a new location within the same building, the charge for the move will be an amount equal to one half of the nonrecurring (i.e., installation) charge for the service termination affected. There will be no change in the minimum period requirements.

7. Special Access Service (Cont'd)

7.4 Rate Regulations (Cont'd)

7.4.5 Moves (Cont'd)

(B) Moves to a Different Building

Moves to a different building will be treated as a discontinuance and start of service and all associated nonrecurring charges will apply. New minimum period requirements will be established for the services. The customer will also remain responsible for satisfying all outstanding Minimum Period Charges for the disconnected service.

7.4.6 Mileage Measurement

The mileage to be used to determine the monthly rate for the Channel Mileage Facility rate element is calculated on the airline distance between the serving wire centers involved, i.e., the serving wire centers associated with two (2) customer designated premises, a serving wire center associated with a customer designated premises and a Company Hub, or two (2) Company Hubs or between the serving wire center associated with a customer designated premises, and a WATS Serving Wire Office. The serving wire center associated with a customer designated premises is the serving wire center from which the customer designated premises would normally obtain dial tone.

The V&H Coordinates Method is used to determine mileage. This method is explained in the National Exchange Carrier Association***, Inc.*** Tariff F.C.C. No. 4. (T)
If the method results in fractional miles, the fractional miles are rounded up to the nearest whole number before determining the rate to be billed. The serving wire center and Hub V&H Coordinates are also included in that tariff.

When Hubs are involved, mileage is computed and rates applied separately for each section of the Channel Mileage, i.e., customer designated premises serving wire center to Hub, Hub to Hub and/or Hub to customer designated premises serving wire center. However, when any service is routed through a Hub for purposes other than customer specified bridging or Multiplexing (e.g., the Company chooses to so route for test access purposes), rates will be applied only to the distance calculated between the serving wire centers associated with the customer designated premises.

7. Special Access Service (Cont'd)

7.4 Rate Regulations (Cont'd)

7.4.7 Facility Hubs

A customer has the option of ordering Voice Grade facilities or digital high capacity facilities (i.e., DS1, ***DS1C or DS3***) to a facility Hub for channelizing to individual services requiring lower capacity facilities (e.g., Voice, etc.). (C)

Different locations may be designated as Hubs for different facility capacities, e.g., multiplexing from digital to digital may occur at one location while multiplexing from digital to voice may occur at a different location. When ordering, the customer will specify the desired multiplexing Hub(s) selected from the National Exchange Carrier Association***, Inc.*** Tariff F.C.C. No. 4. (T)

This tariff identifies the type(s) of multiplexing functions which are available and the wire centers at which they are available.

Some of the types of multiplexing available include the following:

- from higher to lower bit rate
- from digital to voice frequency channels

End to end services may be provided on channels of these facilities to a Hub. The transmission performance for the end to end service provided between customer designated premises will be that of the lower capacity or bit rate. For example, when a 1.544 Mbps facility is multiplexed to voice frequency channels, the transmission performance of the channelized services will be Voice Grade, not High Capacity.

7. Special Access Service (Cont'd)

7.4 Rate Regulations (Cont'd)

7.4.7 Facility Hubs (Cont'd)

The Company will commence billing the monthly rate for the facility to the Hub on the date specified by the customer on the service order. Individual services utilizing these facilities may be installed coincident with the installation of the facility to the Hub, or may be ordered and/or installed at a later date, at the option of the customer. The customer will be billed for a Voice Grade or a high capacity digital Service Termination, Channel Mileage (when applicable), and the multiplexer at the time the facility is installed. Individual service rates (by service type) will apply for a Service Termination and additional Channel Mileage (as required) for each channelized service. These will be billed to the customer as each individual service is installed.

Cascading multiplexing occurs when a high capacity digital channel is de-multiplexed to provide channels with a lesser capacity and one of the less capacity channels is further de-multiplexed. For example, a DS3 facility is de-multiplexed to twenty-eight DS1 facilities, and then one of the DS1 facilities is further de-multiplexed to individual Voice Grade channels.

When cascading multiplexing is performed, whether in the same or a different Hub, a charge for the additional multiplexing unit also applies. When cascading multiplexing is performed at different Hubbing locations, Channel Mileage charges also apply between the Hubs.

7. Special Access Service (Cont'd)

7.4 Rate Regulations (Cont'd)

7.4.8 Shared Use of Digital High Capacity Services

Shared use occurs when Special Access Service and Switched Access Service are provided over the same High Capacity facilities through a common interface. The facility will be ordered, provided and rated as Special Access Service (i.e., Service Termination, Channel Mileage, as appropriate, and Multiplexer). The nonrecurring charge that applies when the shared use facility is installed will be the nonrecurring charge associated with the appropriate Special Access High Capacity Service Termination. Individual service (i.e., Switched or Special Access) nonrecurring charges will not apply to the individual channels of the shared use facility. Rating as Special Access will continue until such time as the customer chooses to use a portion of the available capacity for providing Switched Access Service. As each individual channel is activated for Switch Access Service, the Special Access Service Termination, Channel Mileage and Multiplexer rates will be reduced accordingly (e.g., 1/24th for a DS1 Service and 1/672 for DS3 Service, etc.). The customer must place an order for each individual Switched or Special Access Service utilizing the Shared Use Facilities and specify the channel assignment for each such service.

7. Special Access Service (Cont'd)

7.4 Rate Regulations (Cont'd)

7.4.8 Shared Use of Digital High Capacity Services (Cont'd)

Switched Access Service rates and charges as set forth in 6.8 preceding will apply for each channel of the shared use facility that is used to provide Switched Access Service. As each individual channel is activated for Switched Access Service, the Switched Transport Entrance Facility, Multiplexer, and Direct-Trunked Transport rates will be charged accordingly (e.g., 1/24th for a DS1 Service and 1/672nd for DS3 Service). Where Special Access Service is provided utilizing a channel of the shared facility to the Hub, Special Access High Capacity rates and charges will apply for the facility to the Hub as set forth preceding, and individual service rates and charges will apply from the Hub to the customer designated premises. The rates and charges that will apply to the portion from the Hub to the customer designated premises will be dependent on the specific type of Special Access Service that is provided (e.g., Voice Grade, DS1, DS3, etc.). The rates and charges will include a Service Termination and Channel Mileage, as appropriate. Rates and charges for optional features and functions associated with the service, if any, will apply as set forth in 7.5 following.

7.4.9 Special Access Term Discount Plan

(A) General

The Special Access Term Discount Plan (TDP) applies to Special ***Access*** (C)
Digital Data Service (56.0 ***and 64.0 kbps), Special*** Access High Capacity (C)
DS1 (1.544 Mbps) and DS3 (44.736 Mbps) ***Services***, and DS3 to DS1 and (T)
DS1 to DS0 Multiplexing. The TDP provides the customer with discounted rates for the services listed. The customer agrees to a minimum service commitment per service on a LATA basis when the TDP is established.

In order for a circuit to be eligible for TDP pricing, the customer must commit a Service Termination and/or Multiplexer associated with that circuit to a TDP. The commitment level for a circuit will be based on Service Terminations and/or Multiplexers. Customers may disconnect or move Service Terminations and/or Multiplexers within the committed area (i.e., LATA) and not be subject to Termination Liability Charges as long as the commitment levels are maintained.

7. Special Access Service (Cont'd)

7.4 Rate Regulations (Cont'd)

7.4.9 Special Access Term Discount Plan (Cont'd)

(B) Commitment Level

All eligible Special Access rate elements for a given circuit (Service Termination, Channel Mileage Termination (fixed), Channel Mileage Facility (per mile), and Multiplexing) must be ordered for the same commitment period with the same service date for the same customer. A customer establishes a TDP by committing all or a portion of their in-service Service Terminations and/or Multiplexers to a ***term of either three years or*** five years. During the term of the selected TDP, the customer must maintain an in-service commitment threshold of not less than 90 percent or more than 130 percent of the committed Service Terminations and/or Multiplexers. (T)

As long as a customer's actual in-service level of Service Terminations and/or Multiplexers remains within the commitment threshold, the customer will be billed the TDP rate for all eligible rate elements. Additionally, if a customer's in-service level exceeds the initial in-service level by no more than 30 percent, the customer will be billed the TDP rates for all eligible rate elements. For example, the customer has two hundred (200) DS1 Service Terminations and/or Multiplexers and elects to commit 150 Service Terminations and/or Multiplexers to a ***three***-year TDP. The customer will be billed TDP rates as long as the in-service level of the Service Terminations and/or Multiplexers is equal to or greater than one hundred thirty-five (135) (90 percent minimum threshold), but not more than one hundred ninety-five (195) (130 percent maximum threshold). (T)

7. Special Access Service (Cont'd)

7.4 Rate Regulations (Cont'd)

7.4.9 Special Access Term Discount Plan (Cont'd)

(B) Commitment Level (Cont'd)

If the customer's in-service request exceeds the initial service level by more than 30 percent, the customer will be billed the month-to-month rate for all facilities above the upper limit of the commitment threshold. If the customer's in-service level falls below the minimum commitment threshold, the customer will be billed ***termination liability charges for the number of Channel*** Terminations and/or Multiplexers ***below the minimum commitment threshold, and the customer's commitment level will be decreased to 110 percent of the customer's current in-service level***. For example, a customer whose minimum commitment threshold is one hundred and thirty-five ***Channel*** Terminations and/or Multiplexers ***(90% of 150)***, but only has one hundred and twenty-five in-service, will be billed ***termination liability charges for 10 Channel*** Terminations and/or Multiplexers and ***the customer's commitment level will be decreased to 138 (110% of 125).***** (C)

Although the commitment level is based upon ***Channel*** Terminations and/or Multiplexers, the following rate elements will receive TDP rates: (T)

Channel Mileage Facility (per mile)
Channel Mileage Termination (fixed)
Multiplexing
Channel Termination (T)

***** Customers subscribing to special access term discount plans established or on order prior to November 19, 2002 may elect to discontinue service without incurring termination liability charges within 90 days of that date.*** (N)

7. Special Access Service (Cont'd)

7.4 Rate Regulations (Cont'd)

7.4.9 Special Access Term Discount Plan (Cont'd)

(C) Ordering Provisions

The customer must order a TDP in writing to the Company. A TDP may be ordered based on the following plan options.

Three Year Plan
Five Year Plan

(D)

(D)

The customer must specify the plan and the length of the service commitment period and commitment level. The customer agrees to a minimum service commitment level per service in effect at one time. For example, a customer that has ***a three***-year plan in effect for DS1 Service may not establish a (T)
second three-year DS1 ***TDP until*** the current TDP expires. Once the plan is (T)
established and commitment levels are agreed upon, standard access ordering procedures will be followed.

When a customer converts to a TDP, no Access Order charges are applied toward facilities in-service at that time. If a customer moves from a month-to-month plan to a TDP or upgrades from one TDP to another, no Access Order charges are applied.

(D) Service Rearrangements

When a circuit committed to a TDP is rearranged as set forth in 7.4.1(C)(3) preceding, the nonrecurring rearrangement charge associated with the month-to-month rates for that service will apply. Changes in the type of service or service termination are treated as disconnects and starts, and the non-recurring installation charge associated with the month-to-month rates for that service will apply. Changes in the physical location at the point of termination are treated as moves, as described in 7.4.5 preceding, and will be assessed the nonrecurring charge associated with the month-to-month rates for that service.

7. Special Access Service (Cont'd)

7.4 Rate Regulations (Cont'd)

7.4.9 Special Access Term Discount Plan (Cont'd)

(E) 90-Day Review Period

No adjustments in monthly billing for a TDP, for being above or below the commitment threshold described in (B) preceding, will take place until ninety (90) days after Company written notification to the customer that the commitment threshold has been exceeded or has not been met. This will ensure that customers will not be penalized for aberrations in Service Termination and/or Multiplexer counts caused by timing differentials in disconnection and installation.

Customer's bills will not be adjusted for being outside the threshold described in (B) preceding during the 90-day review period. Additionally, customers will continue to be billed the adjustments (following the 90-day review period) for being outside the described threshold until the commitment level is met or re-established. A new 90-day review period will be initiated if the customer's actual in-service level subsequently falls outside the described threshold.

(F) Increasing the TDP Commitment Level

Customers may increase their commitment level at any time by notifying the Company in writing. An increase in the commitment level will not change the expiration date of the TDP.

When a commitment level is increased, the actual in-service Service Termination and/or Multiplexer level at the time of the increase will be used to calculate the new commitment threshold as described in (B) preceding.

Upon written notification to the Company, customers may elect to have all future service terminations and/or multiplexers installed during a commitment period automatically placed on the designated TDP. (N) (M)

Customers may may request, upon written notification to the Company, that the Company automatically increase the customer's TDP commitment level when the 130 percent commitment threshold, as set forth in (B) preceding, is exceeded. The adjusted commitment level will be the actual service terminations and/or multiplexers in service under (N)

(M) Material previously appearing on this page now appears on Page 377.4.

7. Special Access Service (Cont'd)

7.4 Rate Regulations (Cont'd)

7.4.9 Special Access Term Discount Plan (Cont'd)

(F) Increasing the TDP Commitment Level (Cont.) (T)

the TDP at the time the 130 percent threshold is exceeded. The expiration date of the customer's TDP will not be affected by this change. (N)

The customer may rescind its request to automatically add future service terminations and/or multiplexers, or to automatically increase its commitment level when the 130 percent threshold is exceeded, by notifying the Company in writing. (N)

(G) Decreasing the TDP Commitment Level and Termination Liabilities (M)

Customers may only decrease their commitment level by paying Termination Liability Charges on the number of Service Terminations and/or Multiplexers by which the commitment level is decreased. Termination liabilities will apply to applicable services covered by the TDP. For example, a customer has a commitment level of one hundred fifty (150) Service Terminations and/or Multiplexers. The customer then decreases its commitment level to one hundred twenty-five (125). The customer must pay a termination liability on the most recently disconnected twenty-five (25) facilities inclusive of all associated rate elements as listed above.

If a customer disconnects any portion of their TDP Service prior to the expiration of the commitment period, the customer will be billed 50 percent of the monthly TDP charges for the remaining portion of the committed term. For example, a customer disconnecting in the twelfth month of a three-year plan will be charged 50 percent of the remaining twenty-four months of billing. (M)

(H) Rate Changes

In this section, the term "rate" refers to the charges associated with the entire circuit covered by a TDP. Rate increases or decreases with automatically be applied to the monthly term plan rates for the remaining term of the TDP. If a Company initiated rate increase causes a customer's rates to increase by 10 percent or more at any one time, the customer may cancel the TDP without incurring Termination Liability Charges.

(M1)

(M) Material now appearing on this page previously appeared on Fourth Revised Page 377.3.
(M1) Material previously appearing on this page now appears on Page 377.5.

7. Special Access Service (Cont'd)

7.4 Rate Regulations (Cont'd)

7.4.9 Special Access Term Discount Plan (Cont'd)

(I) Extension of a TDP Commitment Period (M)

TDP commitment periods can be extended by the customer at any time during the term of the plan, up to a maximum of five years. The number of months accrued in the current plan will apply toward the new plan selected. For example, a customer having completed 15 months of a three-year commitment can extend the commitment to five years and no additional charges will be assessed. The first payment will be considered the 16th payment under the new five-year plan.

(J) Upgrading a TDP Service

When a customer upgrades a Digital Data Service (56.0 or 64.0 kbps) being billed TDP rates to a DS1 service, the TDP commitment level will be reduced at the customer's request (up to a maximum of twenty-four (24)) and no termination liability charge will apply. If the same customer has a TDP for DS1 service, the DS1 TDP commitment level will be increased if the customer requests that it be increased. When a customer upgrades a DS1 service being billed TDP rates to a DS3 service with the same termination points, the customer's DS1 TDP commitment level will be reduced at the customer's request (up to a maximum of twenty-eight (28)) and no Termination Liability Charge will apply. (M)

(K) Renewal of a TDP

At the end of the TDP service commitment period, the customer may subscribe to a new TDP at the prevailing rates set forth in 7.5.10 following. If the customer does not select a new TDP, the rates will convert to the prevailing month-to-month Digital Data Service (56.0 or 64.0 kbps), DS1, or DS3 rates set forth in 7.5.8 and 7.5.9 following. The customer will have a 90-day grace period to renew their TDP before month-to-month rates will be assessed.

(L) Cancellation Charges

When a customer cancels an order for special access services being provided under a TDP, cancellation charges, as set forth in Section 5.2.4 preceding, will be calculated using the nonrecurring charges associated with the month-to-month rates for the service being cancelled.

7. Special Access Service (Cont'd)

7.4 Rate Regulations (Cont'd)

7.4.10 ***Reserved for Future Use*** (C)

(M)

(M)

(D)

(D)

7.4.11 Multiplexer Access Service Connection (MASC)

Multiplexer Access Service Connection (MASC) will be charged per connection per central office where the service is performed. If MASC is provided between two (2) Company offices where Multiplexing is performed, Channel Mileage (Termination and Per Mile) for the lower speed service will apply between the two (2) central offices, along with one (1) MASC Charge per connection per central office.

If two (2) customers are involved, one (1) customer will be responsible for the entire billing of the MASC. The responsible customer must obtain a Letter of Authorization (LOA) from the second customer and submit it to the Company with the DS1 or DS3 system and channel assignment information for the lower speed services being connected.

(M) Material previously appearing on this page now appears on Page 334.

7. Special Access Service (Cont'd)

7.5 Rates and Charges

7.5.1 Reserved For Future Use

7. Special Access Service (Cont'd)

7.5 Rates and Charges (Cont'd)

7.5.2 ***Reserved For Future Use*** (C)

(D)

(D)

7. Special Access Service (Cont'd)

7.5 Rates and Charges (Cont'd)

7.5.2 ***Reserved For Future Use*** (Cont'd) (C)

(D)

(D)

7. Special Access Service (Cont'd)

7.5 Rates and Charges (Cont'd)

7.5.2 ***Reserved For Future Use***(Cont'd) (C)

(D)

(D)

7. Special Access Service (Cont'd)

7.5 Rates and Charges (Cont'd)

7.5.2 ***Reserved For Future Use*** (Cont'd) (C)

(D)

(D)

7. Special Access Service (Cont'd)

7.5 Rates and Charges (Cont'd)

7.5.3 Voice Grade Service

	Monthly Rate*	Nonrecurring Installation Charge*	Nonrecurring Rearrangement Charge*	
(A) Service Termination				
- Per Point of Termination				
- Two-Wire	***$30.00***	$77.50	$38.75	(I)

* These rates are applicable to WATS services provided over voice grade facilities.

7. Special Access Service (Cont'd)

7.5 Rates and Charges (Cont'd)

7.5.3 Voice Grade Service (Cont'd)

	Monthly Rate*	Nonrecurring Installation Charge*	Nonrecurring Rearrangement Charge*	
(A) Service Termination (Cont'd)				
- Per Point of Termination				
- Four-Wire	***$50.00***	$77.50	$38.75	(I)

* These rates are applicable to WATS services provided over voice grade facilities.

7. Special Access Service (Cont'd)

7.5 Rates and Charges (Cont'd)

7.5.3 Voice Grade Service (Cont'd)

	Monthly Rates		
	Termination (Fixed)*	Facility (Per Mile)*	
(B) Channel Mileage	***$24.00***	***$2.00***	(I)

* These rates are applicable to WATS services provided over voice grade facilities.

7. Special Access Service (Cont'd)

7.5 Rates and Charges (Cont'd)

7.5.3 Voice Grade Service (Cont'd)

		Monthly Rate	Nonrecurring Charge
(C) Optional Features and Functions			
(1) Bridging			
(a) Voice Bridging			
- Per Port	(D)	$8.70	$40.00

7. Special Access Service (Cont'd)

7.5 Rates and Charges (Cont'd)

7.5.3 Voice Grade Service (Cont'd)

		Monthly Rate	Nonrecurring Charge
(C) Optional Features and Functions (Cont'd)			
(1) Bridging (Cont'd)			
(b) Data Bridging			
- Per Port	(D)	$8.70	$40.00

7. Special Access Service (Cont'd)

7.5 Rates and Charges (Cont'd)

7.5.3 Voice Grade Service (Cont'd)

		Monthly Rate	Nonrecurring Charge
(C) Optional Features and Functions (Cont'd)			
(1) Bridging (Cont'd)			
(c) Telephoto Bridging			
- Per Port		ICB	$40.00
(d) Station Bridge			
- Per Port	(D)	ICB	40.00

7. Special Access Service (Cont'd)

7.5 Rates and Charges (Cont'd)

7.5.3 Voice Grade Service (Cont'd)

		Monthly Rate	Nonrecurring Charge
(C) Optional Features and Functions (Cont'd)			
(2) Conditioning			
- Per Point of Termination			
(a) C-Type		$ 5.35	$20.00
(b) Improved Attenuation Distortion		5.00	20.00
(c) Improved Envelope Delay Distortion	(D)	19.00	20.00

7. Special Access Service (Cont'd)

7.5 Rates and Charges (Cont'd)

7.5.3 Voice Grade Service (Cont'd)

		Monthly Rate	Nonrecurring Charge *
(C) Optional Features and Functions (Cont'd)			
(2) Conditioning (Cont'd)			
- Per Point of Termination			
(d) Sealing Current	(D)	NONE	$20.00

* Only applicable subsequent to initial installation of a Voice Grade Service.

7. Special Access Service (Cont'd)

7.5 Rates and Charges (Cont'd)

7.5.3 Voice Grade Service (Cont'd)

		Monthly Rate	Nonrecurring Charge
(C) Optional Features and Functions (Cont'd)			
(2) Conditioning (Cont'd)			
- Per Point of Termination			
(e) Improved Return Loss/ Improved Termination			
- Two-Wire		$2.50	$20.00
- Four-Wire	(D)	3.00	20.00

7. Special Access Service (Cont'd)

7.5 Rates and Charges (Cont'd)

7.5.3 Voice Grade Service (Cont'd)

	Monthly Rate	Nonrecurring Charge *
(C) Optional Features and Functions (Cont'd)		
(2) Conditioning (Cont'd)		
(f) Customer Specified Premises Receive Level		
- Per Two-Wire Point of Termination	NONE	$20.00
(g) Loopback Capability (Chargeable with Channel Interface Codes other than DA and DB)		
- Per Point of Termination Equipped	ICB	20.00

* Only applicable subsequent to initial installation of a voice grade service. (Z)

7. Special Access Service (Cont'd)

7.5 Rates and Charges (Cont'd)

7.5.3 Voice Grade Service (Cont'd)

		Monthly Rate	Nonrecurring Charge
(C) Optional Features and Functions (Cont'd)			
(2) Conditioning (Cont'd)			
- Per Point of Termination			
(h) DA Type Conditioning		$7.00	$20.00
(i) Telephoto Capability	(D)	ICB	20.00

7. Special Access Service (Cont'd)

7.5 Rates and Charges (Cont'd)

7.5.3 Voice Grade Service (Cont'd)

This page is reserved for future use. (C)
(D)
|
(D)

7. Special Access Service (Cont'd)

7.5 Rates and Charges (Cont'd)

7.5.4 Reserved For Future Use

7.5.5 Reserved For Future Use

7. Special Access Service (Cont'd)

7.5 Rates and Charges (Cont'd)

7.5.6 Reserved For Future Use

7. Special Access Service (Cont'd)

7.5 Rates and Charges (Cont'd)

7.5.7 ***Reserved For Future Use (Cont'd)*** (C)

(D)

(D)

7. Special Access Service (Cont'd)

7.5 Rates and Charges (Cont'd)

7.5.7 ***Reserved For Future Use*** (Cont'd) (C)

(D)

(D)

7. Special Access Service (Cont'd)

7.5 Rates and Charges (Cont'd)

7.5.7 ***Reserved For Future Use (Cont'd)*** (C)

(D)

(D)

7. Special Access Service (Cont'd)

7.5 Rates and Charges (Cont'd)

7.5.8 Digital Data Service

	Monthly Rate	Nonrecurring Charge	
(A) Service Termination			
- Per Point of Termination			
- 2.4 kbps	***$60.00***	$185.04	(I)
- 4.8 kbps	***60.00***	185.04	(I)
- 9.6 kbps	***60.00***	203.84	(I)
- 19.2 kbps	***60.00***	194.00	(I)
- 56.0/64.0 kbps	***64.00***	232.89	(I)

7. Special Access Service (Cont'd)

7.5 Rates and Charges (Cont'd)

7.5.8 Digital Data Service (Cont'd)

(B) Reserved For Future Use

(C) Reserved For Future Use

(D) Channel Mileage

(1) 2.4 kbps

	Monthly Rates		
	Termination (Fixed)	Facility (Per Mile)	
- Over 0 miles	***$40.00***	***$1.75***	(I)

(2) 4.8 kbps

	Monthly Rates		
	Termination (Fixed)	Facility (Per Mile)	
- Over 0 miles	***$40.00***	***$1.75***	(I)

7. Special Access Service (Cont'd)

7.5 Rates and Charges (Cont'd)

7.5.8 Digital Data Service (Cont'd)

(D) Channel Mileage (Cont'd)

(3) 9.6 kbps

	Monthly Rates		
	Termination (Fixed)	Facility (Per Mile)	
- Over 0 miles	***$40.00***	***$1.75***	(I)

(4) 19.2 kbps

	Monthly Rates		
	Termination (Fixed)	Facility (Per Mile)	
- Over 0 miles	***$40.00***	***$1.75***	(I)

7. Special Access Service (Cont'd)

7.5 Rates and Charges (Cont'd)

7.5.8 Digital Data Service (Cont'd)

(D) Channel Mileage (Cont'd)

(5) 56.0/64.0 kbps

	Monthly Rates		
	Termination (Fixed)	Facility (Per Mile)	
- Over 0 Miles	***$64.00***	***$ 3.50***	(I)

7. Special Access Service (Cont'd)

7.5 Rates and Charges (Cont'd)

7.5.8 Digital Data Service (Cont'd)

	(D)	Monthly Rate	Nonrecurring Charge	
(C) Optional Features and Functions				
(1) Bridging				
(Available with all DA packages) - Per Port		$ 4.20	$ 97.00	
(2) Reserved For Future Use				
(3) Secondary Channel				
56.0 kbps		ICB	ICB	
(4) Data Amplification				
56.0***/64.0*** kbps	(D)	85.00	100.00	(C)

7. Special Access Service (Cont'd)

7.5 Rates and Charges (Cont'd)

7.5.9 High Capacity Service

	Monthly Rate	Nonrecurring Installation Charge	Nonrecurring Rearrangement Charge	
(A) Service Termination				
- Per Point of Termination				
(1) Reserved for Future Use				
(2) 1.544 Mbps	***$134.00***	$175.00	$87.50	(I)
(3) 44.736 Mbps				

Monthly Rates			Nonrecurring Installation Charge	Nonrecurring Rearrangement Charge
Within CO	Over 3 Miles	Over 3 Miles		
$2,100.00	$2,100.00	$2,100.00	$463.00	$231.50

	Monthly Rate	Nonrecurring Charge
(4) 128.0 kbps (Fractional DS1)	$124.00	$360.00
(5) 256.0 kbps (Fractional DS1)	145.00	360.00
(6) 384.0 kbps (Fractional DS1)	165.00	360.00

7. Special Access Service (Cont'd)

7.5 Rates and Charges (Cont'd)

7.5.9 High Capacity Service (Cont'd)

(B) Channel Mileage

			Monthly Rates		
		(D)	Fixed	Per Mile	
(1)	***Reserved for Future Use***				(C)
(2)	1.544 Mbps	(D)	$90.00	$23.00	

7. Special Access Service (Cont'd)

7.5 Rates and Charges (Cont'd)

7.5.9 High Capacity Service (Cont'd)

(B) Channel Mileage (Cont'd)

		Monthly Rates		
		Termination (Fixed)	***Facility*** (Per Mile)	(T)
(3)	44.736 Mbps	$1,200.00	$175.00	
(4)	128.0 kbps (Fractional DS1)	85.50	5.50	

7. Special Access Service (Cont'd)

7.5 Rates and Charges (Cont'd)

7.5.9 High Capacity Service (Cont'd)

(B) Channel Mileage (Cont'd)

		Monthly Rates		
		Termination (Fixed)	***Facility*** (Per Mile)	(T)
(5)	256.0 kbps (Fractional DS1)	$90.00	$ 8.00	
(6)	384.0 kbps	95.00	10.00	

7. Special Access Service (Cont'd)

7.5 Rates and Charges (Cont'd)

7.5.9 High Capacity Service (Cont'd)

		Monthly Rate	Nonrecurring Charge
	(D)		
(C) Optional Features and Functions			
(1) Multiplexing			
- Per Arrangement			
DS3 to DS1		$970.00	$50.00
DS1 to Voice *, DS1 to DS0	(D)	290.00	68.00

* A channel(s) of this DS1 to the Hub can be used for Digital Data Service.

7. Special Access Service (Cont'd)

7.5 Rates and Charges (Cont'd)

7.5.9 High Capacity Service (Cont'd)

This page is reserved for future use. (T)

(D)

(D)

7. Special Access Service (Cont'd)

7.5 Rates and Charges (Cont'd)

7.5.9 High Capacity Service (Cont'd)

	Monthly Rate	Nonrecurring Charge	
(C) Optional Features and Functions (Cont'd)			
(2) Automatic Loop Transfer			
(a) Basic 1xN expandable to 1x6, equipped with 1x1	$295.00*	NONE	
(b) Basic 1xN expandable to 1x6, each additional working line	140.00*	NONE	
(3) Clear Channel Capability (CCC)			
- Per ***Point of*** Termination	NONE	$324.00**	(T)
(4) Reserved for Future Use			
(5) Multiplexer Access Service Connect (MASC)			
(a) DS1	2.00	35.00	
(b) DS3	3.00	45.00	

* These rates are in addition to those for High Capacity Channels.
** A nonrecurring charge will apply when CCC is ordered for a DS1 circuit already in service.

7. Special Access Service (Cont'd)

7.5 Rates and Charges (Cont'd)

7.5.10 Special Access Term Discount Plan

(A) Service Termination

- Per Point of Termination

	Monthly Rate	Nonrecurring Installation Charge	
(1) 1.544 Mbps			
- Three Year Plan	***$130.00***	$0.00	(I)
- Five Year Plan	***125.00***	0.00	(I)

7. Special Access Service (Cont'd)

7.5 Rates and Charges (Cont'd)

7.5.10 Special Access Term Discount Plan (Cont'd)

(A) Service Termination (Cont'd)

- Per Point of Termination

(2) 44.736 Mbps

(D)

(D)

(*a*) ***Three Year Plan*** (T)

Monthly Rates			Nonrecurring
Within CO	0 - 3 Miles	Over 3 Miles	Installation Charge
$1,080.00	$1,320.00	$2,320.00	$0.00

(T)

(*b*) ***Five Year Plan*** (T)

Monthly Rates			Nonrecurring
Within CO	0 - 3 Miles	Over 3 Miles	Installation Charge
$945.00	$1,155.00	$2,030.00	$0.00

(T)

7. Special Access Service (Cont'd)

7.5 Rates and Charges (Cont'd)

7.5.10 Special Access Term Discount Plan (Cont'd)

(A) Service Termination

- Per Point of Termination

	Monthly Rate	Nonrecurring Installation Charge	
(3) Digital Data (56.0/64.0 kbps)			
- Three Year Plan	***$60.00***	$0.00	(I)
- Five Year Plan	***58.00***	0.00	(I)

7. Special Access Service (Cont'd)

7.5 Rates and Charges (Cont'd)

7.5.10 Special Access Term Discount Plan (Cont'd)

(A) ***Reserved for Future Use*** (C)

(D)

(D)

7. Special Access Service (Cont'd)

7.5 Rates and Charges (Cont'd)

7.5.10 Special Access Term Discount Plan (Cont'd)

(B) Channel Mileage

(1) 1.544 Mbps

(a) Channel Mileage Termination (Fixed - Per Month)

Three Year Plan	Five Year Plan
$80.00	$70.00

(b) Channel Mileage Facility ***(Per Mile - Per Month)*** (T)

Three Year Plan	Five Year Plan
$11.20	$ 9.80

7. Special Access Service (Cont'd)

7.5 Rates and Charges (Cont'd)

7.5.10 Special Access Term Discount Plan (Cont'd)

(B) Channel Mileage (Cont'd)

(2) 44.736 Mbps

(a) Channel Mileage Termination (Fixed - Per Month)

Three Year Plan	Five Year Plan	
$600.00	***$500.00***	(I)

(b) Channel Mileage Facility (Per Mile - Per Month)

Three Year Plan	Five Year Plan	
$180.00	***$ 174.00***	(I)

7. Special Access Service (Cont'd)

7.5 Rates and Charges (Cont'd)

7.5.10 Special Access Term Discount Plan (Cont'd)

(B) Channel Mileage (Cont'd)

	Monthly Rates		
	Termination (Fixed)	Facility (Per Mile)	
(3) Digital Data (56.0/64.0 kbps)			
(a) Three-Year Plan	***$39.00***	***$ 1.50***	(I)
(b) Five-Year Plan	***32.00***	***1.25***	(I)

7. Special Access Service (Cont'd)

7.5 Rates and Charges (Cont'd)

7.5.10 Special Access Term Discount Plan (Cont'd)

(B) ***Reserved for Future Use*** (C)

(D)

(D)

7. Special Access Service (Cont'd)

7.5 Rates and Charges (Cont'd)

7.5.10 Special Access Term Discount Plan (Cont'd)

(C) Multiplexing

- Per Arrangement

(1) DS3 to DS1

(D)	***Three Year Plan***	***Five Year Plan***	(T)
			(T)
(D)	$454.40	$397.60	

(2) DS1 to DS0

(D)	***Three Year Plan***	***Five Year Plan***	(T)
			(T)
(D)	$232.00	$203.00	

7. Special Access Service (Cont'd)

7.5 Rates and Charges (Cont'd)

7.5.11 Reserved For Future Use

7. Special Access Service (Cont'd)

7.5 Rates and Charges (Cont'd)

7.5.12 Special Access Surcharge

	Monthly Rate
- Per Voice Equivalent	$25.00

7.5.13 ***Reserved for Future Use*** (C)

(D)

(D)

7. Special Access Service (Cont'd)

7.6 Individual Case Filings

Rates and charges for Special Access Service provided on an individual case basis are filed following:

8. Billing and Collection Services

The Company will provide the following Billing and Collection Services:

(A) Recording and Message Processing Service,
(B) Bill Processing Service,
(C) Billing Analysis Service, and
(D) Billing Information Service.

8.1 Recording and Message Processing Service

The Company will provide Recording and Message Processing Service in association with the offering of Feature Groups C and D Switched Access Service for customer messages that can be recorded by Company provided automatic message accounting equipment or that are chargeable to a customer's end users located within the operating territory of the Company. In addition, where the Company provides operator service and records the customer messages on manual tickets, the Company will provide Recording and Message Processing Service for the manual tickets. Further, at the request of a customer and when technically capable, the Company will provide Recording and Message Processing Service in association with Feature Group A Switched Access service offerings.

The Company will provide Recording and Message Processing Service in its operating territory. The minimum territory for which the Company will provide Recording and Message Processing Service is that served by all appropriately equipped offices in a state operating territory for which the customer has ordered Feature Group A, C, or D Switched Access Service.

The term "customer message" used herein denotes a completed call originated by or chargeable to a customer's end user. An originating customer message begins when answer supervision from the premises of the ordering customer is received by Company recording equipment indicating that the called party has answered. An originating customer message ends when disconnect supervision is received by Company recording equipment from either the premises of the ordering customer or the customer's end user from which the call originated. Chargeable customer messages include both originating customer messages or customer messages chargeable to customer's end users, including administrative messages, located within the operating territory of the Company.

8. Billing and Collection Services (Cont'd)

8.1 Recording and Message Processing Service (Cont'd)

8.1.1 General Description

Recording and Message Processing Service is the recording and transformation of recorded customer call details into rated messages in preparation for billing. Recording and Message Processing Service includes the recording, editing and assembly, rating, and, at the customer's request, provision of rated messages to the customer or other entities.

Recording is the entering on magnetic tape or other acceptable media the details of customer messages originated through Switched Access Service for which appropriate answer and disconnect supervision has been received. Recording is provided 24 hours a day, 7 days a week.

Editing and assembly is the aggregation of the recorded customer message details to create individual messages and the verification that the data required for rating, in accordance with the standard format established by the Company, is present.

Rating (message processing) of customer messages is the computing of applicable charges for each customer message based on the customer provided schedule of rates. Rating also includes the preparation of customer message detail for input to Bill Processing Service, the customer, or other entities.

Further, rating is always performed and editing may be performed coincident with the implementation of a change in the customer's schedule of rates.

Provision of customer message detail is the provision of magnetic tapes containing the rated customer message detail and when requested by the customer and agreed to by the Company, transferring or data-transmitting the rated customer message detail to the customer. Except for lost or damaged records, the recorded detail will be

8. Billing and Collection Services (Cont'd)

8.1 Recording and Message Processing Service (Cont'd)

8.1.1 General Description (Cont'd)

available to the customer not more than five business days after the date all the detail requested by the customer was processed by the Company.

8.1.2 Undertakings of the Company

(A) The Company will record all customer messages carried over Feature Groups C and D Switched Access Service that are available to Company provided recording equipment or operators. Unavailable customer messages (i.e., certain Feature Group C operator and TSPS messages) will not be recorded. The recording equipment will be provided at locations selected by the Company. Editing and assembly, and rating will be performed on all customer messages recorded during the billing period established by the Company.

(B) A standard format for the provision of the rated customer message detail will be established by the Company and provided to the customer. If, in the course of Company business, it is necessary to change the format, the Company will notify the involved customers six months prior to the change.

(C) At the request of the customer and, to the extent possible, the sorting of customer's messages and customer name and address will be provided as set forth in 8.4 following. Where address information is not available in the Company data base or not readily available as a function of message recording, the Company will work cooperatively with the customer to provide the necessary detail.

(D) Rated customer message detail will be provided to a customer as set forth in (N) and (O) following. The Company will determine the number of magnetic tapes or data files required to provide the rated message detail to the customer.

8. Billing and Collection Services (Cont'd)

8.1 Recording and Message Processing Service (Cont'd)

8.1.2 Undertakings of the Company (Cont'd)

(E) At the request of a customer, magnetic tapes containing the rated customer message details will be provided to the customer as part of Recording and Message Processing Service. The Company will supply the magnetic tapes. Unless specified otherwise by the customer, the magnetic tapes will be sent to the customer via first class U.S. Mail Service. However, the customer may pick up the magnetic tapes at a location designated by the Company or request that the detail on the magnetic tapes or in a data file be data-transmitted to the customer. When the rated customer message details are data-transmitted to a customer premises, the data transmission charges will be determined on an individual case basis. When the customer does not wish to receive the rated customer message details, and the Company receives notice from the customer at least two weeks prior to the date the details would be sent to the customer, the charge as set forth in 8.1.7(B) and (C) following does not apply.

Rated customer message detail will be provided in a format similar to that used by the Company as input to Bill Processing Service. All rated customer message detail available to the Company will be provided to the customer.

(F) At the customer's request, the Company will make every reasonable effort to recover rated customer message detail previously made available to the customer, and make it available again for the customer. The charges as set forth in 8.1.7(B), (C), (N) or (O) following will apply for all such detail provided. Such requests must be made within a period of time as mutually agreed to by the Company and a customer.

(G) The Company will provide Recording and Message Processing Service for customer messages recorded within or chargeable to customer's end users located within the operating territory of the Company.

8. Billing and Collection Services (Cont'd)

8.1 Recording and Message Processing Service (Cont'd)

8.1.2 Undertakings of the Company (Cont'd)

(H) A record of customer call details is required to provide Recording and Message Processing Service. Where the customer provides the call details, the records must be in the standard format established by the Company. If the customer provided records must be converted by the Company to the standard format, and the Company agrees to make the conversion, the program development charges as set forth in 8.1.7(P) and (Q) following apply for the hours required to design, develop, test and maintain the necessary programs in addition to all other charges for all such details converted by the Company. The Company will provide to the customer the precise details of the required standard format. If, in the course of Company business, it is necessary to change the standard format, the Company will provide notification to the involved customers six months prior to the change. If the customer requests the customer provided call details be reprocessed by the Company because of a customer error, the Company will reprocess the customer provided call details and the appropriate charges as set forth in 8.1.7 following will apply.

(I) Where the customer subscribes to Bill Processing Service in 8.2 following and the customer provides call details for customer messages not originated within the Company territory, but chargeable to customer end users located within Company territory, all applicable Recording and Message Processing charges as set forth in 8.1.7 following apply.

(J) Upon acceptance by the Company of a Special Order for Recording and Message Processing Service from a customer, the Company will determine the period of time to implement such service on an individual order basis.

(K) If the Company must develop the customer's schedule of rates into a rating program, program development charges, as set forth in 8.1.7(P) and (Q) following, apply for the hours required to design, develop, test, and maintain the necessary programs.

8. Billing and Collection Services (Cont'd)

8.1 Recording and Message Processing Service (Cont'd)

8.1.2 Undertakings of the Company (Cont'd)

(L) Changes in the rate levels of customer charges to be billed will normally be implemented within 30 days after receipt of a Special Order from the customer requesting such changes. Such changes will require modifications of the rating program. Program development charges, as set forth in 8.1.7(P) and (Q) following, apply for the hours required to design, develop, test, and maintain the necessary program changes. If any customer message detail must be reprocessed in order to apply the rate changes, the appropriate message processing charges as set forth in 8.1.7(A), (F) and (G) following apply for all customer messages reprocessed.

(M) Changes in the rate structure for customer services to be billed also require a change in the rating program. When the Company determines that it can accommodate the changes, the conditions and the period of time required to make such changes will be determined on an individual order basis. Program development charges, as set forth in 8.1.7(P) and (Q) following, apply for the hours required to design, develop, test, and maintain the necessary program changes. If any customer message detail must be reprocessed in order to apply the rate changes, the appropriate message processing charges as set forth in 8.1.7(F) and (G) following apply for all customer messages reprocessed.

(N) Where the Company has rated customer messages which are to be billed to an end user by another Exchange Telephone Company, the Company will enter the messages on magnetic tape or data file which can be used for data transmission of the details. When the customer has so arranged with an involved Exchange Telephone Company, the Company will deliver the rated message details to the other Exchange Telephone Company for billing to end users in its operating territories via first class U.S. Mail Service. When the customer does not have billing arrangements with an Exchange Telephone Company, rated messages for billing to the end users of such an Exchange Telephone Company will be delivered to the customer. The Recording and Message Processing charges as set forth

8. Billing and Collection Services (Cont'd)

8.1 Recording and Message Processing Service (Cont'd)

8.1.2 Undertakings of the Company (Cont'd)

(N) (Cont'd)

in 8.1.7(A) through (I) following apply to rated messages that are delivered to the customer. The charges as set forth in 8.1.7(N) and (O) following apply if the message details are transferred or data-transmitted to a location designated by the customer and the charges set forth in 8.1.7(J) through (M) following, apply if transferred to transmitted to other Exchange Telephone Company locations. When the customer message details are data-transmitted to the customer location, the data transmission charges will be determined on an individual case basis. Program development charges as set forth in 8.1.7(P) and (Q) following apply for the hours required to design, develop, test and maintain any necessary programs.

(O) Where the rates for customer services have been implemented under an accounting order pending final approval from a regulatory agency, the Company will, upon written request from the customer, keep such records as may be required to make any adjustments to the end users as may be ordered by the regulatory agency. The charges for such a service will be determined on an individual case basis.

(P) Customer messages which the Company processes that cannot be rated in accordance with the customer rate schedule will be reviewed by Company message investigation groups. Upon completion of the review, rated customer messages will be delivered to the customer when the customer orders such service or to Bill Processing Service when the customer orders such service. Unrated messages will be handled in accordance with instructions that have been mutually determined by the Company and the customer. At the request of the customer, the unrated customer messages will be reviewed for unauthorized use of the customer service by Company message investigation groups for a period of up to 90 days after the customer message was processed. The appropriate charges, as set forth in 8.1.7 following will apply.

8. Billing and Collection Services (Cont'd)

8.1 Recording and Message Processing Service (Cont'd)

8.1.3 Liability of the Company

Notwithstanding 2.1.3 preceding, the Company liability for Recording and Message Processing Service is as follows:

(A) If rated customer message detail is not available because the Company lost or damaged tapes or incurred recording or processing system outages, the Company will attempt to recover the lost customer message detail. If the lost customer detail cannot be recovered, the Company will estimate the volume of lost customer messages and associated revenue based on previously known values. This estimated customer message volume will be included along with the customer message detail provided to the customer and/or provided for Bill Processing Service. Appropriate credit adjustments will be made to the customer amounts due to account for the unbillable revenue.

(B) When the Company is notified that, due to error or omission, incomplete data have been provided to a customer, the Company will make every reasonable effort to locate and/or recover the data at no additional charge. Such request to recover the data must be made within 30 days from the date the rated message details were initially made available to the customer.

(C) In the absence of gross negligence or willful misconduct, no liability for damages to the customer or other person other than set forth in (A) or (B) preceding shall attach to the Company.

8.1.4 Obligations of the Customer

(A) The Customer shall order Recording and Message Processing Services (rating) under a Special Order for each state where service is desired. The minimum period for which Recording and Message Processing Service is provided is one month for each state in which the service is ordered.

8. Billing and Collection Services (Cont'd)

8.1 Recording and Message Processing Service (Cont'd)

8.1.4 Obligations of the Customer (Cont'd)

(B) When Recording and Message Processing Service is ordered, the customer shall furnish the Company, for each state and for the period covered by the order, an estimate of the number of messages (message capacity), including those messages which may be bulk billed, to be processed. When Recording and Message Processing Service is ordered for more than one month, the customer shall furnish the Company message capacity estimates by calendar month.

(C) The customer shall order provision of rated customer message detail at least one month prior to the date when the message detail is to be processed if it wishes to receive the rated customer message detail.

(D) The premises of the ordering customer shall provide such signals as may be required for the proper operation of the Company's automatic message accounting equipment used to perform the detail recordings.

(E) When rated customer messages are to be billed by an entity other than the Company, the customer shall furnish written instructions as to how the rated customer messages are to be provided to that other entity. If the customer does not furnish complete instructions, all resulting unbillable messages will be delivered to the customer. The instructions shall be furnished by the customer in a timely manner.

8. Billing and Collection Services (Cont'd)

8.1 Recording and Message Processing Service (Cont'd)

8.1.4 Obligations of the Customer (Cont'd)

(F) The customer shall furnish to the Company a written schedule of its rates and charges in sufficient time to allow the Company to establish a rating program. The customer's rate structure must be consistent with established Company rating methodologies. The interval required to establish a rating program must be mutually agreeable to the Company and the customer.

(G) When the customer furnishes customer detail for Recording and Message Processing Service, it shall retain a copy of the detail furnished for at least 90 days.

8.1.5 Payment Arrangements and Audit Provision

(A) Audit Provision

Upon reasonable written notice by the customer to the Company, the customer shall have the right through its authorized representative, to examine and audit, during normal business hours and at reasonable intervals as determined by the Company, all such records and accounts as may under recognized accounting practices contain information bearing upon the amount payable to the customer. Adjustments shall be made by the proper party to compensate for any errors or omissions disclosed by such examination or audit. Neither such right to examine and audit nor the right to receive such adjustment shall be affected by any statement to the contrary, appearing on checks or otherwise, unless such

8. Billing and Collection Services (Cont'd)

8.1 Recording and Message Processing Service (Cont'd)

8.1.5 Payment Arrangements and Audit Provision (Cont'd)

(A) Audit Provision (Cont'd)

statement expressly waiving such right appears in a letter, signed by the authorized representative of the party having such right and delivered to the other party.

Any information received or reviewed by the customer or its authorized representative during the audit is to be considered confidential and is not to be distributed, provided, or disclosed in any form to anyone not involved in the audit, nor is such information to be used for any other purpose.

(B) Subscription Period

The subscription period for which Recording and Message Processing Service is provided and for which charges apply is one month or longer.

If the service is discontinued prior to the end of the period ordered, monthly charges as specified in (C) following apply.

(C) Minimum Monthly Charges

Recording and Message Processing Service is subject to minimum monthly charges. The minimum monthly charges are the product of the monthly message capacity as furnished by the customer as set forth in 8.1.4(B) preceding and the Recording, Editing and Assembly, and Rating Charge rate times 0.5 for each month of the period ordered.

8. Billing and Collection Services (Cont'd)

8.1 Recording and Message Processing Service (Cont'd)

8.1.5 Payment Arrangements and Audit Provision (Cont'd)

(D) Cancellation of a Special Order

A customer may cancel a Special Order for Recording and Message Processing Service prior to the date the Company is scheduled to enter the initial order details into its order distribution system, and no charges will apply. The cancellation date is the date the Company receives written or verbal notice from the customer that the Special Order is to be cancelled. The verbal notice must be followed by written confirmation within ten days.

When a customer cancels a Special Order for Recording and Message Processing Service after the date the Company is scheduled to enter the initial order details into its order distribution system, the minimum period charges will apply.

(E) Changes to Special Orders

When a customer requests material changes to a pending Special Order for Recording and Message Processing Service, the pending Special Order will be cancelled and the requested changes will be undertaken if the changes can be accommodated by the Company under a new Special Order. Material changes to a pending Special Order include changes in the location and/or number of Company recording locations, provision of data transmission to a customer location of customer recorded message detail, and changes in schedules, dates or intervals for receipt of customer recorded message detail. When a customer requests non-material changes to a pending Special Order, the changes will be incorporated into the pending Order if the Company can accommodate the request. Non-material changes to a pending Special Order include changes in customer name, customer address and customer requests to receive Recording Service output at the Company location

8. Billing and Collection Services (Cont'd)

8.1 Recording and Message Processing Service (Cont'd)

8.1.5 Payment Arrangements and Audit Provision (Cont'd)

(E) Changes to Special Orders (Cont'd)

instead of through U.S. Mail. All cancellation charges as set forth in (D) preceding will apply to cancelled Special Orders.

8.1.6 Rate Regulations

(A) The Recording and Message Processing Service charges for recording, editing and assembly, and rating apply per message rated whether or not the customer's schedule of rates specifies billing on a per message basis or any other basis.

(B) During any monthly period in which the actual messages rated exceeds by 50% the message capacity ordered for that month, the additional rating charge applies to all messages exceeding the message capacity ordered.

(C) When message detail is transferred or transmitted to or received from an Exchange Telephone Company location by the Company, a charge as set forth in 8.1.7(J) through (M) following, on a per record basis will apply. Also, a per tape charge applies for each tape as set forth in 8.1.7(I) following. A record is a logical grouping of information and loads the magnetic tape or data file used to supply the message detail which is transmitted or received. The Company will determine this charge based on its count of the records transmitted.

(D) When message detail is entered on a data file or magnetic tape for provision of message detail to a customer, the per tape charge applies for each data file or tape prepared, and the per record charge applies for each detail record entered on the data file or tape. The Company will determine the charges based on the number of data files or magnetic tapes prepared and on its count of the records entered thereon.

8. Billing and Collection Services (Cont'd)

8.1 Recording and Message Processing Service (Cont'd)

8.1.6 Rate Regulations (Cont'd)

(E) The basic per hour rate and the premium per hour rate for program development is for the use of one hour of one Company programmer's time. The Company will keep a count of the hours and fraction thereof used by Company personnel to provide program development and will bill the customer in accordance with these records. The hours for each service ordered will be summed and then rounded to the nearest hour, except that when the total is less than one hour, one hour will be used to determine the charges.

(F) All rates and charges for Recording and Message Processing Service remain in effect unless cancelled or otherwise modified by approval revisions to this tariff.

8.1.7 Rates and Charges

The rates and charges on a per unit basis are listed following:

	Rates
(A) Recording, editing and assembly,	
- Per customer message	
South Carolina	$0.0370

8. Billing and Collection Services (Cont'd)

8.1 Recording and Message Processing Service (Cont'd)

8.1.7 Rates and Charges (Cont'd)

	Rates
(B) Preparation of customer message detail,	
- Per record processed	
South Carolina	ICB
(C) Preparation of customer message detail,	
- Per tape	
South Carolina	$50.00
(D) Transferring of recorded message detail to a customer location,	
- Per record transferred	
South Carolina	ICB

8. Billing and Collection Services (Cont'd)

8.1 Recording and Message Processing Service (Cont'd)

8.1.7 Rates and Charges (Cont'd)

	Rates
(E) Data transmission of recorded message detail to a customer location,	
- Per record transmitted	
South Carolina	ICB
(F) Message processing service (rating),	
- Per customer message	
South Carolina	$0.0066

8. Billing and Collection Services (Cont'd)

8.1 Recording and Message Processing Service (Cont'd)

8.1.7 Rates and Charges (Cont'd)

	Rates
(G) Additional message processing service (rating),	
- Per customer message above the message capacity ordered and allowance specified	
South Carolina	$0.0007
(H) Preparation of rated customer message detail for special orders,	
- Per record processed	
South Carolina	ICB

8. Billing and Collection Services (Cont'd)

8.1 Recording and Message Processing Service (Cont'd)

8.1.7 Rates and Charges (Cont'd)

	Rates
(I) Preparation of rated customer message detail for special orders,	
- Per tape	
South Carolina	$50.00
(J) Transferring of rated customer message details between other Exchange Telephone Company locations,	
- Per record transferred	
South Carolina	0.0030

8. Billing and Collection Services (Cont'd)

8.1 Recording and Message Processing Service (Cont'd)

8.1.7 Rates and Charges (Cont'd)

	Rates
(K) Transferring of rated customer message details between other Exchange Telephone Company locations,	
- Per record received	
South Carolina	$0.0030
(L) Data transmission of rated customer message details between other Exchange Telephone Company locations,	
- Per record transmitted	
South Carolina	ICB

8. Billing and Collection Services (Cont'd)

8.1 Recording and Message Processing Service (Cont'd)

8.1.7 Rates and Charges (Cont'd)

	Rates
(M) Data transmission of rated customer message details between other Exchange Telephone locations,	
- Per record received	
South Carolina	ICB
(N) Transferring of rated customer message details to a location designated by the customer,	
- Per record transferred	
South Carolina	ICB

8. Billing and Collection Services (Cont'd)

8.1 Recording and Message Processing Service (Cont'd)

8.1.7 Rates and Charges (Cont'd)

	Rates
(O) Data transmission of rated customer message details to a location designated by the customer,	
- Per record transmitted	
South Carolina	ICB
(P) Program Development Charge, Basic, per hour (Applicable to work performed within the Company's normal work schedule and using the normal work force.)	
South Carolina	$75.00

8. Billing and Collection Services (Cont'd)

8.1 Recording and Message Processing Service (Cont'd)

8.1.7 Rates and Charges (Cont'd)

	Rates
(Q) Program Development Charge Premium, per hour (Applicable to work performed outside the Company's normal work schedule and/or which requires additions to the work force.)	
South Carolina	$110.00

8.2 Billing Service

At the request of a customer, the Company with reasonable notice and reasonable effort will provide Billing Service.

The Company will provide Billing Service in its operating territory. The minimum territory for which the Company will provide Billing Service is its state operating territory when the Company supplies the input records at the customer's request. When the customer supplies the input records, the Company will process the input records supplied by the customer as set forth in 8.2.1 following.

The Company will provide Billing Service only on the condition that it purchase the accounts receivable, if any, from the customer as set forth in 8.2.2 following.

The Company will not render bills under this tariff for the provision and/or delivery of telegrams, flowers, gifts, wine or other like services that a customer offers.

8. Billing and Collection Services (Cont'd)

8.2 Billing Service (Cont'd)

8.2.1 Bill Processing Service

(A) General Description

(1) Bill Processing Service is the preparation of bills for message-billed service and bulk-billed service, mailing of statements of the amounts due for service received from the customer and the collection of deposits and monies due from the end users. Bill Processing Service includes message-billed (when necessary) and bulk-billed account establishment, posting of rated messages and rate elements, rendering of bills, collection of deposits, inquiry, receiving payments, maintenance of accounts, treatment of accounts, and message investigation (when ordered by the customer).

(2) Bulk-billed service is a billing service for an end user account with a WATS Access Line or WATS-type Access Line where individual customer messages are not posted to the account and are not listed on the bill rendered to the end user.

(3) A bulk-billed billing item is one unit of billable charges of the customer bulk-billed service offerings, such as each individually rates service or equipment components, or access lines, on a recurring or nonrecurring basis, which are separately identified on the end user bill.

(4) Message-billed service is a billing service for an end user account where individual customer messages are posted to the account and are listed on the bill rendered to the end user.

(5) Account establishment is the preparation of a customer's end user record so that a bill can be sent to that end user.

(6) Posting of rated messages is the processing for billing of rated messages. Application of appropriate customer rates and charges to all such rate elements is also included when requested by the customer. The rating may be performed by the Company, another entity or the customer

8. Billing and Collection Services (Cont'd)

8.2 Billing Service (Cont'd)

8.2.1 Bill Processing Service (Cont'd)

(A) General Description (Cont'd)

(7) Rendering of bills is the preparation and mailing of statements of the deposits and amounts due from the end user for customer message-billed and bulk-billed services. These statements may, at Company choice, be included as part of the regular monthly bill for local telephone exchange service mailed to the end user.

(8) Receiving payment and maintenance of accounts is the collecting of monies from end users for services furnished by the customer and maintenance of records of all transactions.

(9) Treatment of accounts is the forwarding of notices of delinquent or unpaid end user accounts and posting of credits and adjustments.

(10) Message investigation is that activity undertaken by the Company to secure, or attempt to secure, proper billing information for customer messages.

(11) Inquiry is the answering of end user questions about charges billed for customer services and applications of credits and adjustments to end user accounts and review of customer messages removed from an end user's bill.

(B) Undertakings of the Company

(1) When Bill Processing Service is ordered by a customer, the Company will establish and maintain end user accounts and prepare and render bills for all customer messages, bulk-billed messages and related rate elements it possesses for a state as set forth in (2) through (12) following at rates and charges as set forth in 8.2.1(G) following. The Company will not establish an end user account with any customer balance due.

8. Billing and Collection Services (Cont'd)

8.2 Billing Service (Cont'd)

8.2.1 Bill Processing Service (Cont'd)

(B) Undertakings of the Company (Cont'd)

(1) (Cont'd)

In addition, the Company will, in accordance with Company deposit regulations, determine and collect a deposit from the end user for the customer service. The Company will, when necessary in accordance with the Company deposit regulations, determine and collect the service deposit when an end user account is established or for established accounts when the first customer message is posted to the end user account.

The Company will, when necessary in accordance with the Company deposit regulations, maintain a deposit balance for each end user account. Service deposits will not be maintained by individual customer accounts but will be maintained for the end user account in general. The Company will provide the customer a copy of its service deposit regulations upon request from the customer.

(2) The Company will provide Bill Processing Service for message-billed service, bulk-billed service and related rate elements which are posted to end user accounts located within the operating territory of the Company only. The Company will separate the rated customer messages into a message-billed group and a bulk-billed group for application of rates as set forth in 8.2.1(G) following.

(3) Rated customer messages are required to provide Bill Processing Service. If the customer subscribes to Recording and Message Processing Service as set forth in 8.1 preceding, the rated customer messages may be used as the input. If the customer provides the rated customer messages, those customer messages must be in

8. Billing and Collection Services (Cont'd)

8.2 Billing Service (Cont'd)

8.2.1 Bill Processing Service (Cont'd)

(B) Undertakings of the Company (Cont'd)

(3) (Cont'd)

the standard format established by the Company. Such customer provided rated message data must identify the end user account to be billed. If the customer provided rate messages must be converted by the Company to the standard format and the Company agrees to make the conversion, program development charges as set forth in 8.2.1(G)(17) and (18) following apply for the hours required to design, develop, test and maintain the necessary programs. The recording, editing and assembly, and rating charges, as set forth in 8.1.7(A), (F) and (G) preceding, applies in addition to all other charges for rated customer messages converted by the Company. The Company will provide to the customer the precise details of the required format. If, in the course of Company business, it is necessary to change the format, the Company will notify the involved customers six months prior to the change. If the customer requests the customer provided rated messages be reprocessed by the Company because of a customer error, the Company will reprocess the customer provided rated messages and the appropriate charges as set forth in 8.2.1(G) following will apply.

(4) For end user accounts in its operating territory where the customer has ordered Bill Processing Service, the Company will bill all rated customer messages provided by the customer. The bill format will be determined by the Company.

8. Billing and Collection Services (Cont'd)

8.2 Billing Service (Cont'd)

8.2.1 Bill Processing Service (Cont'd)

(B) Undertakings of the Company (Cont'd)

(5) Upon acceptance by the Company of a Special Order for Bill Processing Service from a customer, the Company will determine the conditions and the period of time to implement such service on an individual order basis. Program development charges, as set forth in 8.2.1(G)(17) and (18) following, apply for the hours required to design, develop, test and maintain the necessary programs including any programs to rate, change the rates of or change the rate structure of any rate elements associated with the customer services.

(6) The Company will provide Bill Processing Service only on the condition that it purchase the accounts receivable from the customer as set forth in 8.2.2 following.

(7) The Company will not provide any information related to Bill Processing Service accounts under this section of the tariff. Bill Processing Service information may be obtained as set forth in 8.4 following.

(8) The Company will provide message-billed Bill Processing Service with inquiry and bulk-billed Bill Processing Service with inquiry. The Company will be responsible for contacts and arrangements with the customer's end users concerning the billing, collecting, crediting and adjusting of customer service charges, except customer deposits and prior customer balances due from end users, in accordance with written instructions furnished by the customer

(9) The Company will accept customer gift certificates for payment from end users if the customer agrees in writing to redeem all such gift certificates. The format of the gift certificate must be acceptable to the Company.

8. Billing and Collection Services (Cont'd)

8.2 Billing Service (Cont'd)

8.2.1 Bill Processing Service (Cont'd)

(B) Undertakings of the Company (Cont'd)

(10) Rated customer messages input to Bill Processing Service which the Company cannot bill for any reason will be reviewed by the Company's message investigation groups. Upon completion of the review, the billable messages will be posted and the appropriate charges, as set forth in 8.2.1(G) following, will apply. Unbillable messages will be handled in accordance with instruction that have been mutually determined by the Company and the customer. At the request of the customer, the rated customer messages which cannot be billed to an end user will be reviewed for unauthorized use of customer service by the Company message investigation groups for a period of up to 90 days after the rated customer message was processed.

(11) The Company will post rated customer messages to the appropriate end user account when it identifies a customer message to be billed to an end user. The Company will bill to an end user other customer message-billed service charges, such as blocking of third number billing, time and rate charges, and subscription charges when it receives an order for such services from a customer. Other customer message-related charges, such as directory assistance and DIAL-IT charges, will be billed to the end user based on customer message data received from Recording and Message Processing Service or from the customer. The Company will make adjustments to end user balances due to account for application of credit authorized by customer inquiry instructions and customer furnished statements.

8. Billing and Collection Services (Cont'd)

8.2 Billing Service (Cont'd)

8.2.1 Bill Processing Service (Cont'd)

(B) Undertakings of the Company (Cont'd)

(12) The Company will establish an end user account for customer bulk-billed service when it receives an order from a customer to perform such activity for a specific end user. The Company will bill customer bulk-billed rate elements, when it receives an order for such services from an customer. Other customer message-related charges for bulk-billed service, such as directory assistance and DIAL-IT charges, will be billed to the end user based on customer message data received from Recording and Message Processing Service or from the customer. The Company will make adjustments to end user balances due to account for application of credit authorized by customer inquiry instructions and customer furnished statements.

(13) Where the rates for customer services have been implemented under an accounting order pending final approval from a regulatory agency, the Company will, upon written request from the customer, keep such records as may be required to make any adjustments to the end users as may be ordered by the regulatory agency. The charges for such a service will be determined on an individual case basis.

(14) The Company will provide Billing Services under a Special Order. The format of this Special Order will be specified by the Company.

(C) Liability of the Company

Notwithstanding 2.1.3 preceding, the Company liability for Bill Processing Service is as follows:

8. Billing and Collection Services (Cont'd)

8.2 Billing Service (Cont'd)

8.2.1 Bill Processing Service (Cont'd)

(C) Liability of the Company (Cont'd)

(1) If Bill Processing Service detail is not available because the Company lost or damaged records or incurred processing system outages, the Company will attempt to recover the lost customer detail. If the lost customer detail cannot be recovered and the Company recorded the details, the customer detail and the extent of the Company's liability for damages will be as set forth in 8.1.3(A) preceding.

If the lost customer detail cannot be recovered and the customer provided the detail, the customer will be requested to resupply the detail. If the customer cannot resupply the detail, the detail and the extent of the Company's liability for damages will be estimated as set forth in 8.1.3(A) preceding. This recovered detail will be included in message detail provided to the customer when the customer orders such service and any recovered customer messages will be billed.

(2) When the Company is notified that, due to its error or omission, incomplete customer detail has been provided to a customer, the Company will make every reasonable effort to recover and provide the customer detail to the customer at no additional charge. Such request to recover the customer detail must be made within 30 days from the date the customer detail was initially made available to the customer.

(3) If the Company finds, or is notified of, an error in billing to an end user, it will make a reasonable effort to correct the error and bill the appropriate end user within the limits permitted by laws of the state in which is provides the service.

8. Billing and Collection Services (Cont'd)

8.2 Billing Service (Cont'd)

8.2.1 Bill Processing Service (Cont'd)

(C) Liability of the Company (Cont'd)

(4) In the absence of gross negligence or willful misconduct, no liability for damages to the customer or other person or entity other than that as set forth in (1), (2) and (3) preceding shall attach to the Company.

(D) Obligations of the Customer

(1) The customer shall order Bill Processing Services under a Special Order for each state where service is desired. The customer shall be responsible for all balances due from end users that exist prior to ordering Bill Processing Service.

At the time Bill Processing Service is initially ordered, the customer shall order the service for a minimum of 18 calendar months. Thereafter, upon six months' written notice, additional service may be ordered for one calendar year at the rates and charges as set forth in 8.2.1(G) following. Not later than six months prior to the end of an order period, the customer shall notify the Company in writing if any service is to be discontinued at the end of the period. If no notice is received from the customer, the Company will automatically extend the services for another calendar year, using the most recent 12 months of capacity provided. The customer will be notified by the Company when such an extension is made. All appropriate charges, as set forth in 8.2.1(G) following, for another year will apply and the minimum charges will be based on the most recent 12 months of message capacity and/or bill capacity provided.

(2) When Bill Processing Service is ordered, the customer shall furnish the Company, for each state and for the calendar year of fraction thereof, an

8. Billing and Collection Services (Cont'd)

8.2 Billing Service (Cont'd)

8.2.1 Bill Processing Service (Cont'd)

(D) Obligations of the Customer (Cont'd)

(2) (Cont'd)

estimate of the number of message (message capacity), including those messages which will be bulk-billed, to be processed. The customer, at its option, may order additional message capacity required to bill the additional messages subject to the subscription period of service of one full calendar year (at the additional level of capacity ordered).

In addition, when Bill Processing Service is ordered, the customer shall furnish the Company, for each state and for each calendar year or fraction thereof, an estimate of the number of end user bills (bill capacity) for which billing is to be provided.

(3) The customer shall furnish all information necessary for the Company to provide the Bill Processing Service, including any per month service charges applicable to an end user and an affidavit that states whether the customer service is subject to any Federal taxes and/or State taxes.

(4) Reserved For Future Use

(5) The customer shall be responsible for all contact and arrangements, including customer deposits and prior customer balances due from end users, with its end users concerning the provision and maintenance of the customer's service.

(6) The customer shall furnish to the Company written instructions, which are agreeable to the Company, for the handling of end user questions about bills.

8. Billing and Collection Services (Cont'd)

8.2 Billing Service (Cont'd)

8.2.1 Bill Processing Service (Cont'd)

(D) Obligations of the Customer (Cont'd)

(7) The customer will immediately redeem all customer gift certificates the Company receives in payment for end user charges. The customer agrees to use a gift certificate format which is agreeable to the Company.

(8) When the customer furnishes recorded and/or rated customer message detail for Bill Processing Service, it shall be responsible to deliver the detail to the location specified by the Company and it shall retain a copy of the detail furnished for at least 90 days.

(9) The customer agrees to permit the Company to, when necessary in accordance with Company deposit regulations, determine and collect customer service deposits from all end users of the customer's services for which the Company provides billing for the customer. The customer will notify its end users through its tariffs or other means that the Company will collect customer service deposits. The customer will also include in its tariff and service arrangements and obtain regulatory concurrence for the Company deposit regulations that the Company will use to collect end user service deposits.

(E) Payment Arrangements and Audit Provision

(1) Audit Provision

Upon written notice by the customer to the Company, the customer shall have the right, through its authorized representative, to examine and audit, during normal business hours and at reasonable intervals determined by the Company, all such records and accounts as may under recognized accounting

8. Billing and Collection Services (Cont'd)

8.2 Billing Service (Cont'd)

8.2.1 Bill Processing Service (Cont'd)

(E) Payment Arrangements and Audit Provision (Cont'd)

(1) Audit Provision (Cont'd)

practices contain information bearing upon the amount payable to the customer. Adjustment shall be made by the proper party to compensate for any errors or omissions disclosed by such examination or audit. Neither such right to examine and audit nor the right to receive such adjustment shall be affected by any statement to the contrary, appearing on checks or otherwise, unless such statement expressly waiving such right appears in a letter signed by the authorized representative of the party having such right and delivered to the other party.

Any information received or reviewed by the customer or its authorized representative during the audit is to be considered confidential and not to be distributed, provided or disclosed in any form to anyone not involved in the audit, nor is such information to be used for any other purpose.

(2) Subscription Period

The subscription period for which Bill Processing Service is provided and for which charges apply is 18 months and begins with the effective date of this tariff. If the customer orders Bill Processing Service to begin on other than January 1, the subscription period expires one year from the subscription date.

If the service is discontinued prior to the end of the period ordered, monthly charges as specified in (3) following apply for each remaining month and fraction of a month.

8. Billing and Collection Services (Cont'd)

8.2 Billing Service (Cont'd)

8.2.1 Bill Processing Service (Cont'd)

(E) Payment Arrangements and Audit Provision (Cont'd)

(3) Minimum Monthly Charges

Bill Processing Service is subject to minimum monthly charges. For message-billed service processing, the minimum monthly charge is the product of one-twelfth of the largest message capacity per calendar year, or annualized for fractions of a year, furnished by the customer as set forth in (D)(2) preceding and the message-billed service processing rate times 0.5 for each month of the period ordered. For invoice billing and collection processing, the minimum monthly charge is the product of one-twelfth of the largest bill capacity per calendar year, or annualized for fractions of a year, furnished by the customer as set forth in (D)(2) preceding and the invoice billing and collection processing rate times .75.

(4) Cancellation of a Special Order

A customer may cancel a Special Order for Bill Processing Service prior to the date the Company is scheduled to enter the initial order details into its order distribution system, and no charges will apply. The cancellation date is the date the Company receives written or verbal notice from the customer that the Special Order is to be cancelled. The verbal notice must be followed by written confirmation within ten days.

When a customer cancels a Special Order for Bill Processing Service after the date the Company is scheduled to enter the initial order details into its

8. Billing and Collection Services (Cont'd)

8.2 Billing Service (Cont'd)

8.2.1 Bill Processing Service (Cont'd)

(E) Payment Arrangements and Audit Provision (Cont'd)

(4) Cancellation of a Special Order (Cont'd)

order distribution system, but prior to the start of service, a charge equal to the program development costs and any nonrecoverable capital costs incurred by the Company will apply to the customer.

(5) Changes to Special Orders

When a customer requests changes to a pending Special Order for Bill Processing Service, such changes will be undertaken if they can be accommodated by the Company. A charge equal to any costs incurred by the Company because of the change will apply.

(F) Rate Regulations

(1) The Bill Processing Service message charges apply to all messages billed by the Company. For the purpose of determining the charges applicable to bulk-billed service for Bill Processing Service, a bulk-billed message is a customer message which is used by the Company to develop the customer bulk-billed charge.

(2) During any monthly period in which the actual customer messages or invoices billed exceeds by 50% of one-twelfth of the capacity ordered by the customer, additional charges apply. For message-billed service processing, the additional message-billed service processing charge applies to all messages exceeding one-twelfth of the message capacity ordered. For invoice billing and collection processing, the additional invoice billing and collection processing charge applies to all invoices exceeding one-twelfth of the bill capacity ordered.

8. Billing and Collection Services (Cont'd)

8.2 Billing Service (Cont'd)

8.2.1 Bill Processing Service (Cont'd)

(F) Rate Regulations (Cont'd)

(2) (Cont'd)

The customer, at its option, may order additional message or bill capacity required to bill the additional messages subject to the subscription period and minimum monthly charges as set forth in (E)(2) and (E)(3) preceding.

(3) The invoice billing and collection processing message-billed service charge applies each month that one or more messages or related rate elements are billed to an end user. When both interstate and state customer messages are billed by the Company to the end user on the same bill for the customer, the invoice billing and collection processing message-billed service charge times 0.5 applies each month.

(4) An invoice billing and collection processing bulk-billed service charge applies each month that one or more bulk-billed charges are billed to an end user. When both interstate and state customer bulk-billed charges are billed by the Company to the end user on the same bill for the customer, the invoice billing and collection processing bulk-billed service charge times 0.5 applies each month.

(5) The end user account activity charge applies whenever an end user account is established or changed pursuant to a customer order or whenever a nonrecurring or recurring customer rate element is added or changed in the account.

An end user account is a record for message-billed service or bulk-billed service which has an unique name and address and billing identification number, assigned by the Company, to which a bill is rendered.

8. Billing and Collection Services (Cont'd)

8.2 Billing Service (Cont'd)

8.2.1 Bill Processing Service (Cont'd)

(F) Rate Regulations (Cont'd)

(6) The basic per hour rate the premium per hour rate for program development is for the use of one hour of one Company programmer's time.

(7) The Company will keep a count of the hours and fraction thereof used by Company personnel to provide program development and will bill the customer in accordance with these records. The hours for each service ordered will be summed and then rounded to the nearest hour, except that when the total is less than one hour, one hour will be used to determine the charges.

(8) All rates and charges for Bill Processing Service remain in effect unless cancelled or otherwise modified by approved revisions to this tariff.

(G) Rates and Charges

The rates and charges are:

	Rates
(1) Message-billed processing, including inquiry function,	
- Per customer message	
South Carolina	$0.0395

8. Billing and Collection Services (Cont'd)

8.2 Billing Service (Cont'd)

8.2.1 Bill Processing Service (Cont'd)

(G) Rates and Charges (Cont'd)

	Rates
(2) Message-billed processing excluding inquiry function,	
- Per customer message	
South Carolina	ICB
(3) Additional message-billed processing, including inquiry, above the message capacity ordered and allowance specified,	
- Per customer message	
South Carolina	$0.0040

8. Billing and Collection Services (Cont'd)

8.2 Billing Service (Cont'd)

8.2.1 Bill Processing Service (Cont'd)

(G) Rates and Charges (Cont'd)

	Rates
(4) Additional message-billed processing, excluding inquiry, above the message capacity ordered and allowance specified,	
- Per customer message	
South Carolina	ICB
(5) Bulk-billed processing including inquiry functions,	
- Per customer message	
South Carolina	$0.0395

8. Billing and Collection Services (Cont'd)

8.2 Billing Service (Cont'd)

8.2.1 Bill Processing Service (Cont'd)

(G) Rates and Charges (Cont'd)

	Rates
(6) Bulk-billed processing, excluding inquiry function,	
- Per customer message	
South Carolina	ICB
(7) Additional bulk-billed processing, including inquiry, above the message capacity ordered and allowance specified,	
- Per customer message	
South Carolina	$0.0040

8. Billing and Collection Services (Cont'd)

8.2 Billing Service (Cont'd)

8.2.1 Bill Processing Service (Cont'd)

(G) Rates and Charges (Cont'd)

	Rates
(8) Additional bulk-billed processing, excluding inquiry, above the message capacity ordered and allowance specified,	
- Per customer message	
South Carolina	ICB
(9) Bill rendering, message-billed service,	
- Per bill rendered for an end user account	
South Carolina	$0.3651

8. Billing and Collection Services (Cont'd)

8.2 Billing Service (Cont'd)

8.2.1 Bill Processing Service (Cont'd)

(G) Rates and Charges (Cont'd)

	Rates
(10) Bill rendering, bulk-billed service,	
- Per bill rendered for an end user account	
South Carolina	$0.3651
(11) Additional bill rendering, message-billed service, above the bill capacity ordered and allowance specified,	
- Per bill rendered for an end user account	
South Carolina	$0.3651

8. Billing and Collection Services (Cont'd)

8.2 Billing Service (Cont'd)

8.2.1 Bill Processing Service (Cont'd)

(G) Rates and Charges (Cont'd)

	Rates
(12) Additional bill rendering, bulk-billed service, above the bill capacity ordered and allowance specified,	
- Per bill rendered for an end user account	
South Carolina	$0.0365
(13) Retention of records under accounting orders,	
- Per order per month	
South Carolina	ICB

8. Billing and Collection Services (Cont'd)

8.2 Billing Service (Cont'd)

8.2.1 Bill Processing Service (Cont'd)

(G) Rates and Charges (Cont'd)

	Rates
(14) End user account activity, special order charge to receive end user account data,	
- Per special order	
South Carolina	ICB
(15) End user account activity, end user account establishment or change,	
- Per separate customer request	
South Carolina	$20.00

8. Billing and Collection Services (Cont'd)

8.2 Billing Service (Cont'd)

8.2.1 Bill Processing Service (Cont'd)

(G) Rates and Charges (Cont'd)

	Rates
(16) End user account activity, end user account establishment or record change in conjunction with other end user account activity,	
- Per separate customer request	
South Carolina	$ 6.00
(17) Program development charge, Basic, per hour (Applicable to work performed within the Company's normal work schedule and using the normal work force.)	
South Carolina	$75.00

8. Billing and Collection Services (Cont'd)

8.2 Billing Service (Cont'd)

8.2.1 Bill Processing Service (Cont'd)

(G) Rates and Charges (Cont'd)

	Rates
(18) Program development charge, Premium, per hour (Applicable to work performed outside the Company's normal work schedule and/or which requires additions to the work force.)	
South Carolina	$110.00

8.2.2 Purchase of Accounts Receivable

The Company will purchase from the customer its accounts receivable that arise from bills rendered by the Company to that customer's end users. The purchase of accounts receivable will be limited to amounts due the customer when the Company provides Bill Processing Service for that customer. After a customer orders Bill Processing Service and the Company is purchasing the customer's accounts receivable, the customer is prohibited from assigning, transferring, selling, exchanging or giving these accounts receivable to any other entity or person. The customer will provide a written assurance to the Company as such forbearance and any such assignment, transfer, sale, exchange or gift is null and void and will subject the customer to all liabilities, expenses, costs including attorney fees expended and incurred by the Company in pursuing exclusive ownership to the accounts receivable.

8. Billing and Collection Services (Cont'd)

8.2 Billing Service (Cont'd)

8.2.2 Purchase of Accounts Receivable (Cont'd)

The Company's purchase of a customer's accounts receivable shall be with recourse adjustments as set forth in (B) following to account for amounts due the customer that the Company is unable to collect from the end users which use the customer's services. The amounts due the customer for the purchase of its accounts receivable will be determined as follows:

(A) Total Current Amount Billed

The Company for each end user bill day (i.e., the billing date on a bill for an end user of a customer's service) will determine from its records the total current amount lawfully billed to the customer's end users for customer services, including all taxes applicable to such services. A Total Current Amount Billed will be determined for each customer for each end user bill day.

(B) Recourse Adjustments

For each bill day, the Company will make recourse adjustments to the Total Current Amount Billed as follows:

(1) End User Adjustments

For each bill day, the Company will subtract from the Total Current Amount Billed the lawfully billed amounts which the Company removes from end users balances due in accordance with customer inquiry instructions. In addition, under terms mutually agreed to by both the customer and the

8. Billing and Collection Services (Cont'd)

8.2 Billing Service (Cont'd)

8.2.2 Purchase of Accounts Receivable (Cont'd)

(B) Recourse Adjustments (Cont'd)

(1) End User Adjustments (Cont'd)

Company, the Company may subtract from the Total Current Amount Billed an amount that equals the face value of any customer gift certificates (or its predecessor company's gift certificates) the Company has in its possession. The customer gift certificates the Company possesses will be returned to the customer.

(2) Company and Customer Adjustments

For each bill day, the Company may make adjustments to the Total Current Amount Billed to account for amounts on statements received from the customer for additions or subtractions to an end user balance due for serviced billed in prior periods. Also, each bill day, the Company may make adjustments to the Total Current Amount Billed to account for additions and subtractions for customer or Company prior billing period errors.

(3) Uncollectible Adjustments

For each bill day, the Company will subtract from the Total Current Amount Billed an amount for uncollectibles. Uncollectibles are amounts billed by the Company to end users that are unpaid and have been added to the uncollectible accounts of the Company. The Company will perform periodic studies to adjust the customer uncollectible factor for end user payment experience.

8. Billing and Collection Services (Cont'd)

8.2 Billing Service (Cont'd)

8.2.2 Purchase of Accounts Receivable (Cont'd)

(C) Payments of Net Purchase Amount to the Customer

(1) The Company will purchase accounts receivable from the customer on each end user bill day for an amount (purchase amount) which equals the Total Current Amount Billed as set forth in (A) preceding after known adjustments as set forth in (B) preceding have been made. On the date (payment date) determined by adding 31 days to the end user bill day, except as provided herein, the Company will remit payment to the customer for the purchase amount less additional adjustments as set forth in (B)(1) and (B)(2) preceding (net purchase amount) received by the Company prior to the payment date. Payment will be made in immediately available funds. If such payment date would cause payment to be due on a Saturday, Sunday or National Holiday (i.e., New Year's Day, Independence Day, Labor Day, Thanksgiving Day, Christmas Day, the second Tuesday in November and a day when Washington's Birthday, Memorial Day or Columbus Day is legally observed), payment for the net purchase amount will be due to the customer as follows:

If such payment date falls on a Sunday or on a Holiday which is observed on a Monday, the payment date shall be the first non-Holiday day following such Sunday or Holiday. If such payment date falls on a Saturday or on a Holiday which is observed on Tuesday, Wednesday, Thursday or Friday, the payment date shall be the last non-Holiday day preceding such Saturday or Holiday.

(2) Also, if any adjustment that reduces an end user balance due is received by the Company from the customer after the date the Company billed the charges to be adjusted to the end user plus 31 days (billed plus date), then a late payment penalty shall be due the Company. The late payment penalty shall be the adjustment amount times a late factor. The late factor shall be the lessor of:

8. Billing and Collection Services (Cont'd)

8.2 Billing Service (Cont'd)

8.2.2 Purchase of Accounts Receivable (Cont'd)

(C) Payments of Net Purchase Amount to the Customer (Cont'd)

(2) (Cont'd)

(a) the highest interest rate (in decimal value) which may be levied by law for commercial transactions in the state in which the Company provides Bill Processing Service to the customer, compounded daily for the number of days from the billed plus date to and including the date that the Company posts the end user account, or

(b) 0.000590 per day, compounded daily for the number of days from the payment date to and including the date that the Company posts the end user account.

Any late payment penalty will be included with the adjustment made by the Company to the customer's Total Current Amount Billed.

(D) Netting of Customer Access Service Charges and Net Purchase Amounts

When a payment for customer Access Service Charges under this tariff is due to the Company from the customer on the same payment date that a net purchase amount is due to the customer from the Company, the Company may, with at least a 31 day notice to the customer, net the payment for customer Access Service Charges with the net purchase amount. The Company will pay the net amount to the customer on the payment date when such net amount is due the customer or require the customer to pay the Company the net amount when such net amount is due the Company.

8. Billing and Collection Services (Cont'd)

8.2 Billing Service (Cont'd)

8.2.2 Purchase of Accounts Receivable (Cont'd)

Upon request from the customer, the Company will provide a copy of its methods and procedures used to determine the amounts named in this section (i.e., 8.2.2 Purchase of Accounts Receivable) to the authorized representative of the customer who is responsible for auditing these amounts.

8.3 Billing Analysis Service

At the request of a customer, the Company upon reasonable notice and with reasonable effort will provide Billing Analysis Service for detection, investigation and deterrence of billing evasion activities.

The term "billing evasion activities" used herein denotes Message Billing Abuse and/or Network Abuse. Such abuse is the use of an access line (e.g., end user line or trunk, Pay Telephone line or other access line or trunk provided by the Company) where there is intent to circumvent or evade the proper charges in whole or in part for use of telecommunications services over the access line, or to conceal the points of origin or termination of telecommunications services.

Such activities include bypass or circumvention of Company billing equipment, unauthorized use of Company and customer service offerings, and unauthorized use of Company facilities.

8.3.1 General Description

Billing Analysis Service is the provision of detection investigation and deterrence of billing evasion activities.

Detection is the provision of equipment by the Company to identify and collect information on Network Abuse. Such equipment may be located in Company premises or offices or may be attached to access lines.

8. Billing and Collection Services (Cont'd)

8.3 Billing Analysis Service (Cont'd)

8.3.1 General Description (Cont'd)

Investigation is the provision of investigative services to collect evidence to document that billing evasion activities are occurring, prepare reports, preserve evidence and supply expert witness analysis and testimony. Investigation also includes provision of services to coordinate the investigative activities between Exchange Telephone Companies and/or law enforcement agencies.

Deterrence is the contacting and interviewing of parties identified in billing evasion activities, the recovery of devices or materials used in billing evasion activities (where legally permitted), the service review for possible suspension of service over access lines identified in billing evasion activities and publicity assistance in publicizing billing evasion deterrence.

8.3.2 Undertakings of the Company

(A) When Billing Analysis Service is ordered under a Special Order by an authorized Security representative of the customer the Company will provide any one or all of the services as set forth in (B) through (D) following at rates and charges as set forth in 8.3.7 following.

(B) Detection Service will be provided for Network Abuse at any central office switch equipped to recognize and record irregular key pulse and multi-frequency signals upon receipt of a Special Order from a customer specifying the central office where detection service is requested. Subject to the agreement of the Company, special construction for the provision of central office equipment to recognize and record irregular key pulse and multi-frequency signals may be undertaken at the request of the authorized Security representative of the customer to meet the needs of the customer. Such special construction will be provided as set forth in 14. of this tariff.

8. Billing and Collection Services (Cont'd)

8.3 Billing Analysis Service (Cont'd)

8.3.2 Undertakings of the Company (Cont'd)

(B) (Cont'd)

(1) Reports of detection service results will be provided on an office-by-office or line-by-line basis at the request of the authorized Security representative of the customer. On an office-by-office basis, a detection service report of any signal irregularities will be provided for the previous 60 days for all trunks equipped in the office. Alternatively, for an office requested by the customer, a line-by-line continuous scan for current signal irregularities will be provided. When the continuous line-by-line scan is provided, a weekly report of signal irregularities for the office involved will be furnished.

(2) The detection service reports as set forth in (1) preceding will include, for a signaling irregularity observed, the following: (a) the calling NPA and telephone number (i.e., NXX-XXX), (b) the called number (i.e., NPA and telephone number recorded by Company billing equipment) if available, (c) signaling irregularity data, (d) the holding time of the call, if available, and (e) the date of the call, if available. The report will be provided as a paper printout at the discretion of the Company and sent to the authorized Security representative of the customer by registered first class U.S. Mail service. However, an authorized Security representative of the customer may pick up the report at a location designated by the Company. The 60-day report will be available for mailing or pickup 2 weeks after the end of the 60-day period. Results of the continuous scan will be provided to the authorized Security representative of the customer by a written report and/or a telephonic report within six working days after the end of the weekly scan. (M) (M)

(M) Material previously appeared on First Revised Page 464.

8. Billing and Collection Services (Cont'd)

8.3 Billing Analysis Service (Cont'd)

8.3.2 Undertakings of the Company (Cont'd)

(M)

(M)

(C) Investigative Service will be provided by authorized Company Security personnel upon receipt of a Special Order from an authorized Security representative of the customer specifying the line or lines or billing evasion activity (i.e., Message Billing Abuse and/or Network Abuse) to be investigated. The services provided may include the provision of an identification report, collection of evidence, provision of a detection and documentation scan, preparation of an affidavit and prospective summary, preservation of evidence collected, assistance to law enforcement agencies and provision of expert witness analysis and/or testimony, the coordination of billing evasion investigative services and the review of an customer's billing evasion control program.

(1) Provision of an identification report is the collection by Company personnel of billing information, party name, party address, service configuration, if any, and the preparation and submission of information pertinent to the customer's service in a report to the authorized Security representative of the customer for each line or billing evasion activity specified by the customer.

(M) Material previously appearing on this page now appears on Second Revised Page 463.

8. Billing and Collection Services (Cont'd)

8.3 Billing Analysis Service (Cont'd)

8.3.2 Undertakings of the Company (Cont'd)

(C) (Cont'd)

(2) Collection of evidence is the gathering of information pertinent to the line, message, or party associated with the billing evasion activity specified by the authorized Security representative of the customer. Collection of evidence includes a written notification to the authorized Security representative of the customer of the results of such gathering efforts. The Company will determine the information provided in the written notification.

(3) Subject to the agreement of the Company, a detection and documentation scan on an individual line will provided when an authorized Security representative of the customer provides a written request for such a scan. Provision of a detection and documentation scan on an individual line is the continuous scan of a line for irregular signals and when an irregular signal is recognized, the collection by Company equipment of information to show an irregular signal and use of the line occurred. Any information collected during the continuous scan of a line will be considered the property of the Company. The Company will notify the customer of the results of the scan and will permit authorized Security representatives of the customer to review the results. The scan and any associated information will not be provided to any person or entity until the Company is requested to do so by subpoena or lawful demand. Any out of pocket payments for travel and/or other expenses of Company personnel will be billed to the customer.

(4) Preparation of an affidavit and prospective summary is the written documentation of the evidence collected by the Company personnel who performed such activities.

8. Billing and Collection Services (Cont'd)

8.3 Billing Analysis Service (Cont'd)

8.3.2 Undertakings of the Company (Cont'd)

(C) (Cont'd)

(5) Preservation of evidence is the placement of the collected evidence in a secure location under the control of Company Security personnel for a period of up to two years. Such preservation of evidence will be continued beyond two years by the Company when requested by appropriate law enforcement agencies or the authorized Security representative of the customer.

(6) Assistance to law enforcement is the accompanying of duly authorized law enforcement personnel to a location where billing evasion activities have been determined to exist in order to identify billing evasion activity devices or materials. The Company personnel will provide such assistance to law enforcement personnel only after law enforcement involvement has been arranged by the customer, or under services as set forth in (10) following. If such assistance is required at locations outside the operating territory of the Company involved, any out of pocket payments for travel and/or other expenses of Company personnel will be billed to the customer, except to the extent that such expenses are paid by the judicial system.

(7) Provision of expert witness analysis is the review, study and other technical support activities provided by Company experts to analyze and/or document whether devices and materials associated with an investigation furnished by the authorized Security representative of the customer operate, perform or contain billing evasion activities. A written analysis report will be provided to the authorized Security representative of the customer. The expert will be selected by the Company.

8. Billing and Collection Services (Cont'd)

8.3 Billing Analysis Service (Cont'd)

8.3.2 Undertakings of the Company (Cont'd)

(C) (Cont'd)

(8) Provision of expert witness testimony is the preparation of testimony and the submission of such testimony in association with an investigation. A copy of the written testimony, if any, will be provided to the authorized Security representative of the customer. The expert witness will be selected by the Company. Any out of pocket payments for travel and/or other expenses of Company personnel will be billed to the customer.

(9) Coordination of billing evasion investigative services between telephone companies is the referral of investigative information to other telephone company Security personnel, provision of billing evasion information to other telephone company Security personnel, the collection of information from other telephone company Security personnel, and the tracking, collecting and reporting of the results of such investigations to the authorized Security representative of the customer.

(10) Coordination of billing evasion investigative activities of participating law enforcement agencies is the provision of billing evasion information to the law enforcement agencies, the collection of billing evasion information from the law enforcement agencies and the tracking, collecting and reporting of the results of such participation to the authorized Security representative of the customer. This coordination will be provided only upon receipt of written authorization from the authorized Security representative of the customer.

(11) Review of customer billing evasion deterrence control programs and related activities is advice to and/or training of customer personnel on billing evasion deterrence and preventive controls and the development of billing evasion deterrence and preventive control programs for the customer.

8. Billing and Collection Services (Cont'd)

8.3 Billing Analysis Service (Cont'd)

8.3.2 Undertakings of the Company (Cont'd)

(C) (Cont'd)

The Company will, at the request of the customer, provide investigation service on a premium time basis. When investigation service is provided on such a basis, premium time charges apply.

(D) Deterrence services will be provided at any location in the operating territory of the Company that Company Security personnel can safely and legally enter. Deterrence services will be provided, at the request of the authorized Security representative of the customer, by written or telephonic notice. A telephone notice received from the authorized Security representative of the customer, must be followed by written confirmation within one day. Deterrence services will be provided only after an investigation service has been provided by the Company and billing evasion activity is found to warrant such actions. Deterrence service includes the contacting and interviewing of parties identified by the Company as being involved in billing evasion activities, the recovery of devices and/or materials associated with billing evasion activities, service review for possible suspension of Company service, and publicity assistance for publicizing billing evasion activity deterrence.

(1) Contacting and interviewing of parties is the written or verbal notification to, or a face-to-face discussion with, a party or parties by Company Security personnel in order to deter further billing evasion activities. Contacting and interviewing is provided at locations identified by law enforcement agencies, the customer or the Company.

(2) Recovery of devices or materials is the attempt by Company Security personnel to recover devices or materials which are used in association with Company facilities in billing evasion activities. Such recovery is provided at locations identified by the Company, law enforcement agencies or the customer.

8. Billing and Collection Services (Cont'd)

8.3 Billing Analysis Service (Cont'd)

8.3.2 Undertakings of the Company (Cont'd)

(D) (Cont'd)

(3) Service Review for possible suspension of Company service is the request for authority to suspend service from appropriate Company officers, notification to the end user that service will be suspended and, after review of the end user response, or lack thereof, suspension of service, if warranted, in the Company's judgment.

(4) Publicity assistance for publicizing billing evasion activity deterrence is the provision of information and personnel to aid in publicizing billing evasion activity deterrence. The Company will determine what information it will provide, if any, and will select the personnel and media, if any, to provide this service.

8.3.3 Liability of the Company

Notwithstanding 2.1.3 preceding, in the absence of gross negligence or willful misconduct, no liability for damages to the customer or other person or entity shall attach to the Company for its action or the conduct of its employees in providing Billing Analysis Service.

8.3.4 Obligations of the Customer

(A) The authorized Security representative of the customer shall order all Billing Analysis Service under a Special Order. The authorized Security representative of the customer shall order those Billing Analysis Services it wishes to receive.

(B) With each order, the customer shall designate and identify its authorized Security representative who will be responsible to protect the information and to whom the Billing Analysis Service information will be provided. The customer shall assure and take every effort to make sure the Billing Analysis Service information is provided to and used only by authorized personnel involved in billing evasion activity matters.

8. Billing and Collection Services (Cont'd)

8.3 Billing Analysis Service (Cont'd)

8.3.4 Obligations of the Customer (Cont'd)

(C) When Billing Analysis Service Investigation is ordered, the authorized Security representative of the customer shall furnish all known details of the billing evasion activities, including the access lines, parties or messages to be investigated, and shall furnish all necessary end user information is possesses to the Company Security personnel. The specification of the access line, party or message to be investigated shall be in writing by the authorized Security representative of the customer.

(D) When law enforcement agencies are to be brought into the investigation, the authorized Security representative of the customer shall secure their participation or authorize the Company in writing to obtain and coordinate such law enforcement agency participation.

(E) When evidence collected by the Company is to be produced in connection with a judicial preceding, the customer shall notify the Company of such a requirement in a timely manner.

(F) When the customer requests that service be suspended for unauthorized use, the customer shall furnish a written request authorized by an officer of the customer. The request shall state the reason for the request and tariff, contract or legal provision permitting such suspension and shall correctly identify the end user, the end user telephone number and the location of the end user service to be suspended.

(G) All inquiries from the customer's end user concerning services provided under this tariff are to be handled by the customer. Any questions to the Company shall be made by the authorized Security representative of the customer.

(H) Except as set forth in 8.3.2(D)(4) preceding, publicizing of actions resulting from services provided under this tariff shall be the responsibility of the customer. The customer shall not publicize that the Company assisted the customer unless the customer has written permission to do so from the Company.

8. Billing and Collection Services (Cont'd)

8.3 Billing Analysis Service (Cont'd)

8.3.4 Obligations of the Customer (Cont'd)

(I) When the authorized Security representative of the customer orders detection service or a detection and documentation scan of an individual line, it shall specify in writing the offices, lines or parties to be included in the scanning and reports the Company will provide.

(J) When provision of expert witness analysis is ordered by the customer, the customer shall be responsible for furnishing the evidence to be analyzed.

(K) When provision of expert witness testimony is ordered by the customer, the customer shall include the name, if any, of the Company expert it desires and when and where the testimony is needed.

8.3.5 Payment Arrangements

(A) Minimum Periods

The minimum period for which Billing Analysis detection service continuous scanning is provided and for which charges apply is one week.

(B) Cancellation of a Special Order

A customer may cancel a Special Order for Billing Analysis Service prior to the date the Company is scheduled to enter the initial order details into its order distribution system, and no charges will apply.

When a customer cancels a Special Order for Billing Analysis Service after the date the Company is scheduled to enter the initial order details into its order distribution system but prior to the start of service, a charge equal to expenses incurred shall apply.

8. Billing and Collection Services (Cont'd)

8.3 Billing Analysis Service (Cont'd)

8.3.5 Payment Arrangements (Cont'd)

(B) Cancellation of a Special Order (Cont'd)

Start of service occurs when the Company Security organization receives the order.

(C) Changes to Special Orders

Customer requested changes to a pending Special Order for Billing Analysis Service will be undertaken if they can be accommodated by the Company. However, all changes to pending Special Orders for detection service will be considered as a discontinuance of the pending order and the placement of a new order and appropriate charges will apply. Any additional time required on the part of the Company personnel will be billed to the customer at the appropriate charges.

8.3.6 Rate Regulations

(A) The charge per report for the 60-day report applies for each report provided to a customer even though no signaling irregularities are found.

(B) The charge per office per week for continuous scan applies for each week of service even though no signaling irregularities are found.

(C) The rates for Detection Service and Deterrence Service will be determined on an individual case basis.

8.3.7 Rates and Charges

The charges are:

8. Billing and Collection Services (Cont'd)

8.3 Billing Analysis Service (Cont'd)

8.3.7 Rates and Charges (Cont'd)

	Rates
(A) Detection Service	
(1) Sixty (60) day report per office,	
- Per report	
South Carolina	ICB
(2) Continuous scan per office,	
- Per week	
South Carolina	ICB

8. Billing and Collection Services (Cont'd)

8.3 Billing Analysis Service (Cont'd)

8.3.7 Rates and Charges (Cont'd)

	Rates
(B) Investigative Service	
(1) Identification report and collection of evidence,	
- Per hour	
South Carolina	$50.00
(2) Security preparation of prosecution (to include preparation of prospective summary, provision of witness analysis and testimony, law enforcement assistance and coordination services),	
- Per hour	
South Carolina	$75.00

8. Billing and Collection Services (Cont'd)

8.3 Billing Analysis Service (Cont'd)

8.3.7 Rates and Charges (Cont'd)

	Rates
(C) Deterrence Service,	
- Per hour	
South Carolina	ICB

8. Billing and Collection Services (Cont'd)

8.4 Billing Information Service

At the request of the customer, the Company will provide information to the customer from its end user records, billing files and account data base.

8.4.1 General Description

Billing Information Service is the provision of information to the customer from Company record systems. Such Billing Information Service will be limited to the provision of information to a customer relating exclusively to end user services provided by that customer. Information relating to services provided by any other entity will not be provided.

Information is defined as any entry in the record system which is not listed as proprietary to the Company. Any entry listed as proprietary to the Company will not be provided.

8.4.2 Undertakings of the Company

(A) When Billing Information Service is ordered by the customer, the Company will provide information on a request by request basis as follows in (B) through (F) following at the rates and charges as set forth in 8.4.7 following.

8. Billing and Collection Services (Cont'd)

8.4 Billing Information Service (Cont'd)

8.4.2 Undertakings of the Company (Cont'd)

(B) Upon request from a customer, and when the customer has ordered message processing service, the Company will provide information from its records as follows:

(1) message detail for a message end user
(2) account detail for a message end user
(3) service and equipment detail for a message end user.

Message detail is message-billed records in exchange message record (EMR) format.

Account detail is data that furnishes the end user name, billing address and billing parameters other than message detail and/or service and equipment detail.

Service and equipment detail is data associated with the customer's rate elements.

A message end user is an account with customer message or bulk-billed detail (for a bill period), or an account which is marked, as set forth in (H) following, established as an end user of the customer's message or bulk-billed services.

Message detail, account detail and/or service and equipment detail which is confidential due to legal, national security, end user or other appropriate requirements will not be provided. If the customer requires this information in order to bill its services, it shall secure written permission from the end user to obtain the information from the Company. The customer shall furnish the Company the end user's written permission for the information to be released.

(C) Upon request from an authorized supervisor of the customer for end user information when automatic number identification (ANI) service is provided to the customer by the Company or when the customer offers a telecommunications service for which the billing is based on authorized calling

8. Billing and Collection Services (Cont'd)

8.4 Billing Information Service (Cont'd)

8.4.2 Undertakings of the Company (Cont'd)

(C) (Cont'd)

or called parties, the Company will provide information from its records. Only current information which resides in the data base will be provided.

(D) An end user account will not be identified as a customer account unless there are customer message details associated with the account for the bill period for which message detail is ordered by the customer. Customer bulk-billed message end user accounts are counted as customer accounts.

(E) Upon acceptance by the Company of a Special Order for Billing Information Service from a customer, the Company will determine the period of time to implement such service on an individual order basis.

(F) Upon request from an authorized supervisor of the customer who furnishes the account code assigned by the Company, the Company will provide name and town information from its records. The name and town data, but not street address, will be provided only when the customer needs the information to authorize a call, to bill a call, or to handle an emergency situation. The information will be provided on a request by request basis by voice telecommunications. Name, town and state will be provided for a telephone number. A request includes the handling of one call and providing the data for one telephone number. End user address information will be provided to the customer by the Company as defined in 8.4.2(B) preceding.

The Company will specify the location where requests are to be received and the format in which the request is to be made.

If the name and address associated with the telephone number is restricted due to the request of the user, legal authority or law enforcement agency, no name or town location will be provided.

8. Billing and Collection Services (Cont'd)

8.4 Billing Information Service (Cont'd)

8.4.2 Undertakings of the Company (Cont'd)

(F) (Cont'd)

At the request of the customer, written confirmation of the name and town location will be sent to the authorized supervisor making the request by first class U.S. Mail service.

(G) Where Company facilities are available Customer Name and Address (CNA) information may be provided on an interrogation basis at the request of the customer.

The interrogation basis will permit the customer to access the Company's office which has the information and, after verification that the information is authorized for the customer's use, receive the end user information. The interrogation capability will be provided during the normal Company business hours. The end user information will be updated after each billing cycle.

(H) The Company will, at the request of the customer, mark any message-billed message end user account, other than end user accounts with customer credit cards or rate elements, as a user of the customer's message services. After marking is ordered, the end user account will be marked as a customer end user account at the time the first message is posted to the end user account. If not marked at the request of the customer, such an end user account will not be identified as a customer account unless there are customer message details associated with the account for the bill period for which message detail is ordered by the customer. The mark will be removed at the request of the customer. Charges to mark the account and maintain the mark in future months as set forth in 8.4.7(G) and (H) following apply. Customer bulk-billed end user accounts and message end user accounts with customer credit cards or customer rate elements are counted as customer accounts.

8. Billing and Collection Services (Cont'd)

8.4 Billing Information Service (Cont'd)

8.4.2 Undertakings of the Company (Cont'd)

(I) Upon acceptance by the Company of a Special Order for Billing Information Service from a customer, the Company will determine the period of time to implement such service on an individual order basis.

(J) Upon request from an authorized supervisor of the customer who furnishes the account code assigned by the Company, the Company will provide name and town information from its CNA data. The CNA name and town data, but not street address, will be provided only when the customer needs the information to authorize a call, to bill a call, or to handle an emergency situation. The information will be provided on a request-by-request basis by voice telecommunications. Name, town and state will be provided for a telephone number. A request includes the handling of one call and providing the data for one telephone number.

The Company will notify the customer of the location where requests are to be received and the format in which the requests are to be made.

If the name and address associated with the telephone number is restricted due to the request of the end user, legal authority or law enforcement agency, no name or town location will be provided.

(K) If the customer requests the information ordered by the customer be resupplied by the Company because of incorrect customer specifications or errors, the Company will resupply the information in accordance with a new customer order and all appropriate charges as set forth in 8.4.7 following will apply.

8. Billing and Collection Services (Cont'd)

8.4 Billing Information Service (Cont'd)

8.4.3 Liability of the Company

Notwithstanding 2.1.3 preceding, in the absence of willful misconduct, no liability for damages to the customer or other person or entity shall attach to the Company for its action or the conduct of its employees in providing Billing Information Service.

8.4.4 Obligations of the Customer

(A) The customer shall order Billing Information Service under a Special Order. The customer shall order those Billing Information Services for the states where it wishes to receive the services and shall specify how often it wishes the service to be provided.

(B) With each order, the customer shall identify the authorized individual and address to receive the Billing Information Service output. When Billing Information Service is ordered, the customer will identify in writing and include the account codes assigned by the Company of all authorized individuals who will contact the Company for name and town information.

(C) The customer shall take every effort to make sure that Billing Information Service output and interrogation capability is provided only to authorized personnel. The customer shall agree, in writing to the Company, that the customer will not provide the Billing Information Service outputs to third parties for use by such third parties except for work for the customer and which is under complete control of the customer.

(D) The customer shall be responsible for all contacts and inquiries from its end users concerning Billing Information Service.

8. Billing and Collection Services (Cont'd)

8.4 Billing Information Service (Cont'd)

8.4.4 Obligations of the Customer (Cont'd)

(E) The customer shall not publicize or represent to others that the Company jointly participates with the customer in the development of the customer's end user records, accounts, data bases or market data, records, files and data bases or other systems it assembles through the use of Billing Information Service.

(F) The customer shall furnish to the Company, when interrogation service is ordered, all information necessary to allow the Company to establish an interrogation program. In addition, the customer shall furnish the Company an estimate of the number of requests per business day that the Company will be asked to handle.

8.4.5 Payment Arrangements

(A) Cancellation of a Special Order

A customer may cancel a Special Order for Billing Information Service prior to the date the Company is scheduled to enter the initial order details into its order distribution system and no charges will apply.

When a customer cancels a Special Order for Billing Information Service after the date the Company is scheduled to enter the initial order details into its order distribution system, but prior to the start of service, charges as listed following shall apply:

(1) For any service, the appropriate per hour rate for all hours expended by the Company to provide the service.

(2) For any service, any expense for equipment obtained for the service where such equipment cannot be reused within six months.

Start of service occurs when the Company notifies the customer that the Company is ready to provide Billing Information Service reports.

8. Billing and Collection Services (Cont'd)

8.4 Billing Information Service (Cont'd)

8.4.5 Payment Arrangements (Cont'd)

(B) Changes to Special Orders

When a customer requests changes for a pending Special Order for Billing Information Service, they will be undertaken if they can be accommodated by the Company. Any additional time required on the part of the Company personnel will be billed to the customer at the appropriate hourly charges.

(C) Minimum Periods and Minimum Monthly Charges

The minimum period for which Billing Information Service is provided and for which charges apply is one year.

The minimum monthly charges for interrogation are the charges for the total number of requests per business day furnished by the customer as set forth in 8.4.4(F) preceding times 18 (i.e. 20 business days per month times 0.9).

When the customer discontinues the service prior to the end of the one-year minimum period, the minimum monthly charge for the data base interrogation will apply for each remaining month and fraction of month.

8.4.6 Rate Regulations

(A) The number and type of records for which charges apply as set forth in 8.4.7 following will be accumulated by the Company and the Company will bill the customer in accordance with these accumulations. A record is a logical grouping of information as described in the programs that process the information, print the paper output, and load the magnetic tape or data file used to supply the detail

8. Billing and Collection Services (Cont'd)

8.4 Billing Information Service (Cont'd)

8.4.6 Rate Regulations (Cont'd)

which is transferred or data-transmitted. For each service and type of output ordered, the number of records processed by the Company to prepare the output will be used to determine the charges. The number of records processed will be determined using the number of records input to or the number of records output from the programs that process the information, print the paper output and load the magnetic tape or data file, whichever number of records is higher.

(B) The number of hours and fraction thereof for which charges apply as set forth in 8.4.7 following will be accumulated by the Company. The per hour rate is for the use of one hour of one Company programmer. The Company will bill the customer for hourly charges in accordance with these accumulations. The accumulated hours for each order will be summed and rounded to the nearest hour, except that when the total is less than one hour, one hour will be used to determine the charges.

(C) When a CNA request is received, the Company will keep a count of the requests. The Company will bill the customer in accordance with these records even though the Company was not able to provide a name and town location for all requests.

(D) When records are entered on a data file or magnetic tape in order to provide information to a customer, the per tape charge applies for each data file or tape prepared. In addition, the per record charge applies for each record entered on the data file or tape. The Company will determine the charges based on the number of data files or tapes prepared and on its count of the records entered on the data file or tape.

(E) When marking of message end user accounts is ordered, the marking charge applies for each end user account marked. Once an account is marked, the maintenance of mark charge applies for each month following the month the account is marked until the customer requests the mark be removed. No charges apply to remove the mark.

8. Billing and Collection Services (Cont'd)

8.4 Billing Information Service (Cont'd)

8.4.6 Rate Regulations (Cont'd)

(F) All rates and charges for Billing Information Service remain in effect unless cancelled or otherwise modified by approved revisions to this Tariff.

8.4.7 Rates and Charges

	Rates
(A) Transferring of billing information service details to a location designated by the customer,	
- Per record transferred	
South Carolina	ICB
(B) Data transmission of billing information service details to a customer designated by the customer,	
- Per record transmitted	
South Carolina	ICB

8. Billing and Collection Services (Cont'd)

8.4 Billing Information Service (Cont'd)

8.4.7 Rates and Charges (Cont'd)

	Rates
(C) Program Development Charge Basic, per hour (applicable to work performed within the Company's normal work schedule and using the normal work force),	
South Carolina	$ 75.00
(D) Program Development Charge Premium, per hour (applicable to work performed outside the Company's normal work schedule and/or which requires additions to the work force),	
South Carolina	$110.00

8. Billing and Collection Services (Cont'd)

8.4 Billing Information Service (Cont'd)

8.4.7 Rates and Charges (Cont'd)

	Nonrecurring Charges
(E) CNA Information Service, CNA Interrogation,	
- Per telephone number	
South Carolina	$0.87
(F) CNA Information Service, CNA Confirmation,	
- Per request	
South Carolina	$4.37
(G) Marking of Message End User Accounts,	
- Marking, per end user account	
South Carolina	ICB

8. Billing and Collection Services (Cont'd)

8.4 Billing Information Service (Cont'd)

8.4.7 Rates and Charges (Cont'd)

	Nonrecurring Charges
(H) Marking Message End User Accounts,	
- Maintenance of mark, per end user account per month	
South Carolina	ICB

8.5 Private Line Billing Service

The Company will provide Private Line Billing Service only for those private line services for which the Company is providing Special Access Service. The Company will not render bills for private line services for which it does not provide Special Access Service that are connected at end user premises to private line services for which it does not render bills.

The Company will not render bills for usage-based rate elements under this section of the tariff. Usage-based rate elements will be billed as set forth in 8.2.1 preceding.

(A) General Description

Private Line Billing Service includes editing and rating, account establishment, rendering of bills, receiving payments, maintenance of accounts, treatment of accounts and inquiry.

Editing and rating is the examination and identification of all the ratable elements of a customer private line service and the application of the appropriate customer rates and charges to the service. These functions are performed when private line services for a customer's end user are established or changed. Rating is always performed, and editing may be performed, coincident with the implementation of a change in the customer's schedule of rates.

8. Billing and Collection Services (Cont'd)

8.5 Private Line Billing Service (Cont'd)

(A) General Description (Cont'd)

Account establishment is the preparation of a customer end user record so that a bill can be sent to that end user.

Rendering of bills is the preparation and mailing of statements of the amounts due from end users for service received from the customer. These statements may, at Company choice, be included as part of the regular monthly bill for local Telephone Exchange Service mailed to the end user.

Receiving payment and maintenance of accounts is the collecting of deposits and monies from end users for services furnished by the customer and maintenance of records of all transactions.

Treatment of accounts is the forwarding of notices of delinquent or unpaid end user accounts, posting credits and adjustments, and when necessary as determined by the Company, denial of the customer's Special Access Service.

Inquiry is the answering of end user questions about charges for customer services and negotiating of credits and adjustments to end user accounts and review of customer charges which are removed from an end user's bill.

(B) Undertakings of the Company

(1) When Private Line Billing Service is ordered by a customer, the Company will establish a Private Line Account, edit and rate the billing detail, bill the end user and maintain and treat the Private Line Account (based on the rate and end user data supplied by the customer) at the rates and charges set forth in (G) following, as set forth in (2) through (14) following. The Company will not establish a Private Line end user account with any customer balance due. In addition, the Company will, in accordance with Company regulations, determine and collect a deposit from the end user for the customer service. The Company will, when necessary in accordance with Company deposit regulations, determine and collect the service deposit when an end user account is established. The

8. Billing and Collection Services (Cont'd)

8.5 Private Line Billing Service (Cont'd)

(B) Undertakings of the Company (Cont'd)

(1) (Cont'd)

Company will, when necessary in accordance with Company deposit regulations, maintain a service deposit balance for each end user account. The Company will provide the customer a copy of its deposit regulations upon request from the customer.

The Company will make adjustments to end user balances due to account for application of credits authorized by customer furnished statements.

(2) Private Line Billing Service records and end user accounts will be maintained by the Company in a standard format in order to identify the end user and bill the ratable elements. The Company will establish this format and provide it to the customer. The Company will also establish the format it will sue to bill private line services and provide it to the customer. If, in the course of Company business, it is necessary to change these formats, the Company will notify the customers involved six months prior to the change.

(3) The Company will develop the customer's schedule of rates and charges into a rating program. Program development charges, as set forth in (G)(3) following, apply for the hours required to design, develop, test and maintain the necessary programs.

(4) Upon acceptance by the Company of a Special Order for Private Line Billing Service from a customer, the Company will determine the period of time to implement such service on an individual case basis.

(5) Changes in the rate levels of customer service to be billed will normally be implemented within 60 days after receipt of a Special Order from the customer requesting such changes. Such changes will require modifications of the rating program.

8. Billing and Collection Services (Cont'd)

8.5 Private Line Billing Service (Cont'd)

(B) Undertakings of the Company (Cont'd)

(5) (Cont'd)

Program development charges, set forth in (G)(3) following, apply for the hours required to design, develop and test the necessary program changes.

(6) Changes in the rate structure of the customer services to be billed also require a change in the rating programs. When the Company determines that it can accommodate the changes, the conditions and the period of the time required to make such changes will be determined on an individual case basis. Program development charges, as set forth in (G)(3) following, apply for the hours required to design, develop and test the necessary program changes.

(7) The Company will not provide any information related to Private Line Billing Service accounts under this section of the tariff. Private Line Billing Service information may be obtained as set forth in 8.4 preceding.

(8) The Company will provide Private Line Billing with inquiry. The Company will be responsible for contacts and arrangements with the customer's end users concerning the billing, collecting, crediting and adjusting of the customer service charges, except prior customer balances due from end users, in accordance with written instructions furnished by the customer. At the request of the customer, the billed customer charges which are removed from the end user bill in accordance with the customer inquiry instructions will be reviewed for unauthorized use of the customer service by Company message investigation groups for a period of up to 90 days after the billed customer charges have been removed from the end user's bill. For any billed customer charges which are removed from an end user's balance due in accordance with the customer's instructions, the Company will make an appropriate adjustment to the customer's accounts receivable.

8. Billing and Collection Services (Cont'd)

8.5 Private Line Billing Service (Cont'd)

(B) Undertakings of the Company (Cont'd)

(9) When the Company encounters bills which are to be rendered to end users or end user billing addresses not located in the Company's operating territory or in a state where Private Line Billing Service has not been ordered, such bills will be handled as follows:

(a) If the bill to the end user is for a service for which the Company provides a Special Access Service to the customer and the customer has ordered the appropriate Private Line Billing Service, the Company will bill the end user.

(b) In all other situations, the bill will be delivered to the customer and the customer shall be responsible to furnish an accounts receivable adjustment to the Company as set forth in 8.2.2 preceding.

(10) The Company will accept customer gift certificates for payment from end users if the customer agrees in writing to redeem all such gift certificates. The format of the gift certificates must be acceptable to the Company.

(11) Where the rates for customer services have been implemented under an accounting order pending final approval from a regulatory agency, the Company will, upon written request from the customer, keep such records as may be required to make any adjustments to the end users as may be ordered by the regulatory agency. The charges for such a service will be determined on an individual case basis.

(12) The Company will provide Private Line Billing Services under a Special Order. For all Private Line Billing Services other than establishment of or changes to end user account data, establishment of or changes to end user account rate elements and changes to end user balances due, the Private Line Billing Service Special Order charge as set forth in (G)(5) following will apply to orders accepted by the Company. The format of this Special Order will be specified by the Company.

8. Billing and Collection Services (Cont'd)

8.5 Private Line Billing Service (Cont'd)

(B) Undertakings of the Company (Cont'd)

(13) The Company will arrange with the customer to accept under a Special Order end user account information to establish and change end user account data, establish and change end user account rate elements and end user balances due. The methods, procedures and manner in which the end user account data and changes are forwarded to the Company must be agreeable to the Company. The charges to handle such Special Orders will be determined on an individual case basis.

(14) If the customer requests the Private Line bills be reprocessed by the Company because of a customer error, the Company will treat the reprocessing as a rate level or rate structure change. Determination of whether the reprocessing is a rate level change or rate structure change will be made by the Company based on the Special Order the Company receives from the customer. All appropriate charges as set forth in (G) following will apply.

(C) Liability of the Company

Notwithstanding 2.1.3 preceding, the Company liability for Private Line Billing Service is as follows:

(1) If Private Line Billing detail is not available because the Company lost or damaged records or incurred processing system outages, the Company will recover the lost detail based on previously received information. This recovered detail will be provided to the customer if the customer has ordered the appropriate Billing Information Service as set forth in 8.4 preceding.

(2) When the Company is notified that, due to its error or omission, incomplete detail has been provided to the customer when such detail has been ordered as set forth in 8.4 preceding, the Company will make every reasonable effort to recover the detail and provide such information to the customer at no additional charge to the customer. Such request to recover the detail must be made within 30 days from the date the details were initially made available to the customer.

8. Billing and Collection Services (Cont'd)

8.5 Private Line Billing Service (Cont'd)

(C) Liability of the Company (Cont'd)

(3) If the Company finds, or is notified of, an error in billing to the end user, it will correct the error and bill the appropriate end user within the limits permitted by the laws of the state in which it provides the service.

(4) In the absence of gross negligence or willful misconduct, no liability for damages to the customer or other person other than that as set forth in (1), (2) and (3) preceding shall attach to the Company.

(D) Obligations of the Customer

(1) The customer shall order Private Line Billing Service under a Special Order for each state where service is desired.

When Private Line Billing Service is ordered initially, the customer shall order the service for one calendar year. Thereafter, upon six months written notice, additional service may be ordered for one calendar year and the rates and charges as set forth in (G) following will apply. Not later than six months prior to the end of an order period, the customer shall notify the Company in writing if service is to be discontinued at the end of the period. If no notice is received from the customer, the Company will automatically extend the service for an additional year, using the most recent 12 months of bill capacity provided. All appropriate rates and charges as set forth in (G) following for another year will apply and the minimum monthly charges will be based on the most recent 12 months of bill capacity provided. The customer will be notified by the Company when such an extension is made.

(2) When Private Line Billing Service is ordered, the customer shall furnish the Company for each state and for each year in the order an estimate of the average number of bills (bill capacity) to be rendered during the calendar year or fractions thereof.

8. Billing and Collection Services (Cont'd)

8.5 Private Line Billing Service (Cont'd)

(D) Obligations of the Customer (Cont'd)

(3) The customer shall furnish in the format specified by the Company all information necessary for the Company to provide the Private Line Billing Service including an affidavit that states whether the customer Private Line Service is subject to any Federal taxes and/or State taxes. When customer bills are to be rendered to locations not in the operating territory of the Company, the customer shall furnish an address where the bills are to be sent. If the customer does not furnish an address, all unaddressable bills will be delivered to the customer. The information shall be furnished by the customer in a timely manner.

(4) The customer shall furnish to the Company a written schedule of its service rates and charges in sufficient time to allow the Company to establish a rating program. The interval required to establish a rating program must be mutually agreed to by the Company and the customer.

(5) When the customer orders Private Line Billing Service, it shall authorize the Company in writing to deny service to end users for nonpayment. If that authorization is not received, Private Line Billing Service will not be provided.

(6) The customer shall be responsible for all contacts and arrangements, including prior customer balances due from end users, with its end users concerning the provision and maintenance of the customer's services.

(7) The customer shall furnish the Company written instructions which are agreeable to the Company, for the handling of end user questions about bills.

(8) The customer will immediately redeem all customer gift certificates that the Company receives in payment for end user charges. The customer agrees to use a gift certificate format which is agreeable to the Company.

8. Billing and Collection Services (Cont'd)

8.5 Private Line Billing Service (Cont'd)

(D) Obligations of the Customer (Cont'd)

(9) The customer agrees to permit the Company to, when necessary in accordance with Company deposit regulations, determine and collect customer service deposits from all end users of the customer's services for which the Company provides for the customer. The customer will notify its end users through its tariffs or other means that the Company will, when necessary in accordance with Company deposit regulations, determine and collect customer service deposits. The customer will also include in its tariff and service arrangements and obtain regulatory concurrence for the Company deposit regulations that the Company will use to collect end user service deposits

(E) Payment Arrangements and Audit Provisions

(1) Audit Provisions

Upon reasonable written notice by the customer to the Company, the customer shall have the right through its authorized representative to examine and audit, during normal business hours and at reasonable intervals as determined by the Company, all such records and accounts as may under recognized accounting practices contain information bearing upon the amount payable to the customer. Adjustment shall be made by the proper party to compensate for any errors or omissions disclosed by such examination or audit. Neither such right to examine and audit nor the right to receive such adjustment shall be affected by any statement to the contrary, appearing on checks or otherwise, unless such statement expressly waiving such right appears in a letter signed by the authorized representative of the party having such right and delivered to the other party.

All information received or reviewed by the customer or its authorized representative is to be considered confidential and not to be distributed, provided or disclosed in any form to anyone not involved in the audit, nor is such information to be used for any other purpose.

8. Billing and Collection Services (Cont'd)

8.5 Private Line Billing Service (Cont'd)

(E) Payment Arrangements and Audit Provisions (Cont'd)

(2) Subscription Period

The subscription period for which Private Line Billing service is provided, and for which charges apply, is one calendar year. If the customer orders Private Line Billing Service to begin on other than January 1, the subscription period expires on December 31, of the year following.

When service is discontinued prior to the end of the period ordered, the minimum monthly charge is applicable for each month and fraction of month remaining in the subscription period.

(3) Minimum Monthly Charges

Private Line Billing Service is subject to minimum monthly charges. For bill rendering, the minimum monthly charge is the product of one-twelfth of the bill capacity per calendar year, or annualized for fractions of a year, furnished by the customer as set forth in (D)(2) preceding and the bill rendering charge times 0.75 for each month of the period ordered.

(4) Cancellation of a Special Order

A customer may cancel a Special Order for Private Line Billing Service on any date prior to the service date. The cancellation date is the date the Company receives written or verbal notice from the customer that the Special Order is to be cancelled. The verbal notice must be followed by a written confirmation within 10 days. The service date for Private Line Billing Service is the date that the customer and the Company mutually agree service is to start.

When a customer cancels a Special Order for Private Line Billing Service after the order date but prior to the start of service, a charge equal to the program development costs and any non-recoverable capital costs incurred by the Company will apply to the customer.

8. Billing and Collection Services (Cont'd)

8.5 Private Line Billing Service (Cont'd)

(E) Payment Arrangements and Audit Provisions (Cont'd)

(5) Changes to Special Orders

When a customer requests changes to a pending Special Order for Private Line Billing Service, such changes will be undertaken if they can be accommodated by the Company. A charge equal to any costs incurred by the Company because of the change will apply.

(F) Rate Regulations

(1) The end user account activity charge applies whenever an end user account is established or charged pursuant to a Special Order from a customer and/or whenever a nonrecurring or recurring customer rate element or balance due is added to or changed in the account.

(2) The bill rendering charge applies each month that one or more charges is billed by the issuing of a statement to an end user account.

(3) The basic per hour rate and the premium per hour rate for program development is for the use of one hour of one Company programmer's time.

(4) The Company will keep account of the hours and fraction thereof used by Company personnel to provide program development and will bill the customer in accordance with these records. The hours for each order will be summed and then rounded to the nearest hour, except that when the total is less than an hour, one hour will be used to determine the charges.

8. Billing and Collection Services (Cont'd)

8.5 Private Line Billing Service (Cont'd)

(G) Rates and Charges

The rates and charges are:

	(D)	***Rate***	(T)
(1) End User Account Activity - End User Account Establishment and Change, except rate element rate level changes and rate structured changes. Charge, per end user account established or changed and per recurring and nonrecurring rate element established or changes, each		$ 20.00	(T)
(2) Bill rending charge, per bill rendered, for an end user account, each	(D)	0.3651	(T)
(3) Program Development Charge - Basic, per hour (applicable to work performed within the Company's normal work schedule and using the normal work force)		75.00	(T)
- Premium, per hour (applicable to work performed outside the Company's normal work schedule and/or which requires additions to the work force)		110.00	(T)

8. Billing and Collection Services (Cont'd)

8.6 Billing Services Under Contract

8.6.1 General

Billing and Collection Services may also be provided under contract with the customer. Contract services are available providing the customer also has a contract with the Company based on 8.6.2. following The conditions of the contract are thereby incorporated as part of this tariff and supersede the regulations in paragraphs 8.1 through 8.5 preceding in their entirety.

8.6.2 Conditions for Contracts

The following conditions are required for the provision of Billing and Collection Services by contract:

(1) A contract must exist between the customer and the Company for such interstate services.

(2) The rates for the intrastate services must be the same as the rates for the comparable interstate services.

8.7 Contracted Rates Schedules

8.7.1 General

Provided that the conditions outlined in 8.6 preceding have been compiled with by a customer, the rate schedule in 8.7.2 following will supersede the applicable rate schedule in 8.1 through 8.5 preceding, for that specific customer.

In the case that a rate element appears in 8.1 through 8.5 preceding, that is not reflected in the following Rate Schedule(s), the rate appearing in 8.1 through 8.5 preceding will prevail.

8.7.2 Rate Schedule

Information on this page is considered proprietary and is filed under protective seal with the South Carolina Public Service Commission.

8. Billing and Collection Services (Cont'd)

8.7 Contracted Rate Schedules (Cont'd)

8.7.3 Reserved For Future Use

8. Billing and Collection Services (Cont'd)

8.7 Contracted Rate Schedules (Cont'd)

8.7.4 Reserved For Future Use

8. Billing and Collection Services (Cont'd)

8.7 Contracted Rate Schedules (Cont'd)

8.7.5 Reserved For Future Use

9. Directory Assistance Service

Reserved For Future Use

10. Special Federal Government Access Services

10.1 General

This section covers Special Access Services that are provided to a customer for use only by agencies or branches of the Federal Government and other users authorized by the Federal Government. Services provided to state or local emergency operations centers are included. These services provide for command and control communications, including communications for national security, emergency preparedness and presidential requirements. They are required to assure continuity of Government in emergency and crisis situations and to provide for national security.

Services for command and control communications and for national security and emergency preparedness sometimes require short notice and short duration service provisions. These provisions are especially needed to meet presidential requirements or in response to natural, man-made, or declared emergencies. Requirements of this type cannot be forecasted and are usually needed for a relatively short period. The provision of service under these conditions may require the availability of facilities, such as portable microwave equipment, which are provided on a temporary basis by the Company or customer.

10.2 Emergency Conditions

These services will be provided on the date requested or as soon as possible thereafter when the emergency falls into one of the following categories:

- State of crisis declared by National Command Authorities (includes commitments made to the National Communications System in the “National Plan for Emergencies and Major Disasters”).

- Efforts to protect endangered U.S. personnel or property both in the U.S. and abroad (includes space vehicle recovery and protection efforts).

- Communications requirements resulting from hostile action, a major disaster or a major civil disturbance.

10. Special Federal Government Access Services (Cont'd)

10.2 Emergency Conditions (Cont'd)

- The Director (Cabinet level) of a Federal Separtment, Commander of a Unified/Specified Command, or Head of a Military Department has certified that a communication requirement is so critical to the protection of life and property or to the National Defense that it must be processed immediately.

- Political unrest in foreign countries which affect the national interest.

- Presidential Service.

10.3 Intervals to Provide Service

Services provided under the provisions of this Section of the Tariff are provided on an individual case basis. Therefore, orders for such service shall be placed under the service date interval provisions set forth in 5.2.1 preceding.

10.4 Reserved For Future Use

10.5 Safeguarding of Service

10.5.1 Facility Availability

In order to insure communications during periods of emergency, the Company will, within the limits of good management, make available the necessary facilities to restore service in the event of damage or to provide temporary emergency service.

In order to meet the requirements of agencies or branches of the Federal Government, the Company may utilize government-owned facilities, when necessary to provide service.

10. Special Federal Government Access Services (Cont'd)

10.6 Federal Government Regulations

In accordance with Federal Government Regulations, all service provided to the Federal Government will be billed in arrears. However, this provision does not apply to other customers that obtain service under the provisions of this tariff to provide their services to the Federal Government.

10.7 Service Offerings to the Federal Government

The following services are provided to a customer for use only by agencies or branches of the Federal Government, other authorized users and state emergency operations centers. The rates and charges for these services shall be developed on an individual case basis and shall be consistent with the rates and charges for services offered in other sections of this tariff.

10.7.1 Type and Description

(A) Voice Grade Special Access Services

(1) Voice Grade Secure Communications Type I

Approximate bandwidth of 10-50,000 Hertz. Furnished for two-point secure communications on two-wire or four-wire metallic facilities between a customer premises location and an end user's premises. Services are conditioned as follows:

T-3 Conditioning - The absolute loss (referenced to 1 milliwatt) with respect to frequency shall not exceed:

15 dB at 10 Hz
13 dB at 100 Hz
9 dB at 1,000 Hz
20 dB at 10,000 Hz
30 dB at 50,000 Hz

10. Special Federal Government Access Services (Cont'd)

10.7 Service Offerings to the Federal Government (Cont'd)

10.7.1 Type and Description (Cont'd)

(A) Voice Grade Special Access Services (Cont'd)

(1) Voice Grade Secure Communications Type I (Cont'd)

Additional conditioning (available in one or two directions on four-wire facilities only) to provide the following characteristics:

The absolute loss (referenced to 1 milliwatt) with respect to frequency shall not exceed:

0 dB at 1,000 Hz
± 1 dB between 1,000 Hz and 40,000 Hz
± 2 dB between 10 Hz and 50,000 Hz
(+ means more loss)

The net loss of the conditioned service (with or without additional conditioning) shall not vary by more than four dB at 1,000 Hz form the levels specified above. Voice frequency signaling or supervisory tones can be transmitted.

(2) Voice Grade Secure Communications Type II

Approximate bandwidth 10-50,000 Hz. Furnished on four-wire metallic facilities for duplex operation for two-point secure communications between a customer premises on an end user's premises and an end user's premises. Services are conditioned as follows:

G-1 Conditioning - The absolute loss with respect to frequency and the net loss variation shall be the same as Voice Grade Secure Communications Type I services without additional conditioning. Voice frequency signaling or supervisory tones can be transmitted.

10. Special Federal Government Access Services (Cont'd)

10.7 Service Offerings to the Federal Government (Cont'd)

10.7.1 Type and Description (Cont'd)

(A) Voice Grade Special Access Services (Cont'd)

(3) Voice Grade Secure Communications Type III

Approximate bandwidth 10-50,000 Hz. Furnished on four-wire metallic facilities for duplex operation for two-point secure communication between a customer premises switch and an end user's premises. Services are conditioned as follows:

G-2 Conditioning - The absolute loss with respect to frequency and the net loss variation from the switch to an end user's premises shall be the same as Voice Grade Secure Communications Type I services without additional conditioning; from an end user's premises to the switch shall be the same as Voice Grade Secure Communications Type I services with additional conditioning. Voice frequency signaling or supervisory tones can be transmitted.

(4) Voice Grade Secure Communications Type IV

Approximate bandwidth 10-50,000 Hz. Furnished on four-wire metallic facilities for duplex operation for two-point secure communication between two customer premises switches. Services are conditioned as follows:

G-3 Conditioning - The absolute loss with respect to frequency and the net loss variation shall be the same in both directions of transmission as Voice Grade Secure Communications Type I services with additional conditioning. Voice frequency signaling or supervisory tones can be transmitted.

10. Special Federal Government Access Services (Cont'd)

10.7 Service Offerings to the Federal Government (Cont'd)

10.7.1 Type and Description (Cont'd)

(B) ***Reserved For Future Use*** (C)

(D)

(D)

(C) Special Routing Access Service

Special Routing Access Service is furnished only to customers for an agency or branch of the Federal Government. This service provides the customer's end users the ability to originate and terminate calls to or from the customer's premises utilizing a Special Routing Plan.

This service is an optional service, which operates in conjunction with Trunk Side Premium Access Service furnished to customers under other provisions of this tariff.

Rates and charges for Special Routing Access Service will be provided on an individual case basis.

10. Special Federal Government Access Services (Cont'd)

10.7 Service Offerings to the Federal Government (Cont'd)

10.7.1 Type and Description (Cont'd)

(D) Reserved for Future Use (T)

(D)

(D)

10. Special Federal Government Access Services (Cont'd)

10.7 Service Offerings to the Federal Government (Cont'd)

10.7.1 Type and Description (Cont'd)

(D)

(D)

10. Special Federal Government Access Services (Cont'd)

10.7 Service Offerings to the Federal Government (Cont'd)

10.7.2 Mileage Application

Mileage, when used for rate application between two customer premises, shall be determined by the V and H Coordinates Method as set forth in National Exchange Carrier Association***, Inc.*** Tariff F.C.C. No. 4 and administered as set (T)
forth in ***Section*** 7.4.6 preceding. (T)

10. Special Federal Government Access Services (Cont'd)

10.7 Service Offerings to the Federal Government (Cont'd)

10.7.3 Rates and Charges

(A) Voice Grade Special Access Service

The provision of T-3 and G conditioned services contemplates station and tandem switching operations, using customer provided equipment, as well as Special Access Service. Separate narrowband or voice grade services, where required by the customer provided equipment or switching operation are furnished in accordance with the applicable sections of this tariff.

Voice Grade Secure Communications	(D)	Monthly ***Rate***	Nonrecurring ***Charge***	Termination ***Charge***	(T)
Type I, each T-3 Conditioning,		ICB	ICB	ICB	
Add'l Conditioning, Per channel termination		ICB	ICB	ICB	
Type II, each G-1 Conditioning		ICB	ICB	ICB	
Type III, each G-2 Conditioning		ICB	ICB	ICB	
Add'l Conditioning, Per channel termination	(D)	ICB	ICB	ICB	

10. Special Federal Government Access Services (Cont'd)

10.7 Service Offerings to the Federal Government (Cont'd)

10.7.3 Rates and Charges (Cont'd)

(A) Voice Grade Special Access Service (Cont'd)

Voice Grade Secure Communications		Monthly ***Rate***	Nonrecurring ***Charge***	Termination ***Charge***	
Type IV, each G-3 Conditioning		ICB	ICB	ICB	
Add'l Conditioning, Per channel termination	(D)	ICB	ICB	ICB	

(D) (T)

10. Special Federal Government Access Services (Cont'd)

10.7 Service Offerings to the Federal Government (Cont'd)

10.7.3 Rates and Charges (Cont'd)

(B) ***Reserved For Future Use*** (C)

(D)

(D)

10. Special Federal Government Access Services (Cont'd)

10.7 Service Offerings to the Federal Government (Cont'd)

10.7.3 Rates and Charges (Cont'd)

(C) ***Reserved for Future Use*** (T)

(D)

(D)

10. Special Federal Government Access Services (Cont'd)

10.7 Service Offerings to the Federal Government (Cont'd)

10.7.3 Rates and Charges (Cont'd)

(D)

(D)

10. Special Federal Government Access Services (Cont'd)

10.7 Service Offerings to the Federal Government (Cont'd)

10.7.3 Rates and Charges (Cont'd)

(D)

(D)

10. Special Federal Government Access Services (Cont'd)

10.7 Service Offerings to the Federal Government (Cont'd)

10.7.3 Rates and Charges (Cont'd)

(D)

(D)

10. Special Federal Government Access Services (Cont'd)

10.7 Service Offerings to the Federal Government (Cont'd)

10.7.3 Rates and Charges (Cont'd)

(D) Move Charges

(1) When service without a maximum termination liability charge associated with it, as set forth in ***(A) preceding***, is moved to a different building, the nonrecurring charge applies; when moved to a new location in the same building, a charge of one-half the nonrecurring charge applies. (C)

(2) When service with a maximum termination liability charge associated with it, as set forth in ***(A) preceding***, is moved and is reinstalled at a new location, the customer may elect: (C)

- To pay the unexpired portion of the maximum termination liability charge for the service, if any, with the application of a nonrecurring charge and the establishment of a new maximum termination liability for such service at the new location, or

- To continue service subject to the unexpired portion of the maximum termination liability, if any, and pay the estimated costs of moving such service, provided that the customer requests these charges be quoted prior to ordering the service move. Charges for moving such service will be based on estimated costs attributable to the move.

Move charges include the estimated costs of removal, restoration of services or facilities necessitated by the move, transportation, storage, reinstallation, engineering, labor, supervision, materials, administration, and any other specific items of cost directly attributable to the move.

11. Special Facilities Routing of Access Services

11.1 Description of Special Facilities Routing of Access Services

The services provided under this tariff are provided over such routes and facilities as the Company may elect. Special Facilities Routing is involved when, in order to comply with requirements specified by the customer, the Company provides Switched Access Service, Special Access Services or Special Federal Government Access Service in a manner which includes one or more of the following conditions:

11.1.1 Diversity

Two or more services must be provided over not more than two different physical routes.

11.1.2 Avoidance

A service must be provided on a route, which avoids specified geographical locations.

11.1.3 Cable-Only Facilities

Certain Voice Grade services are provided on Cable-Only Facilities to meet the particular needs of a customer.

Service is provided subject to the availability of Cable-Only facilities. In the event of service failure, restoration will be made through the use of any available facilities as selected by the Company.

Avoidance and Diversity are available on Switched Access Service as set forth in 6 preceding, Special Access Services as set for in 7 preceding and Special Federal Government Access Services as set forth in 10.7 preceding. Cable-Only Facilities are available with Switched Access Service as set forth in 6 preceding, Voice Grade Special Access Services as set forth in 7.2.3 preceding, and Special Federal Government Access Services as set forth in 10.7 preceding.

11. Special Facilities Routing of Access Services (Cont'd)

11.1 Description of Special Facilities Routing of Access Services (Cont'd)

In order to avoid the compromise of special routing information, the Company will provide the required routing information for each specially routed service to only the ordering customer. If requested by the customer, this information will be provided when service is installed and prior to any subsequent changes in routing.

The offering of Special Facilities Routing of Access Services contemplates the use of existing facilities. Should facilities not be available, it may be necessary to construct such facilities, either as (1) normal or (2) Special Construction. If Special Construction is involved, the regulations, as set for in 14 following, apply. However, the applicable rates and charges shall be filed in this section of this tariff, not the Special Construction section. In either case of (1) or (2) preceding, the rates and charges for administration and any other specific items of cost directly attributable to the provision of this service shall be filed in this section also.

The rates and charges for Special Facilities Routing of Access Services as set forth in 11.2 following are in addition to all other rates and charges that may be applicable for services provided under other sections of this tariff.

11.2 Rates and Charges for Special Facilities Routing of Access Service

The rates and charges for Special Facilities Routing of Access Services are as follows:

11.2.1 Diversity

For each service provided in accordance with 11.1.1 preceding, the rates and charges will be developed on an individual case basis.

11. Special Facilities Routing of Access Services (Cont'd)

11.2 Rates and Charges for Special Facilities Routing of Access Service (Cont'd)

11.2.2 Avoidance

For each service provided in accordance with 11.1.2 preceding, the rates and charges will be developed on an individual case basis.

11.2.3 Diversity and Avoidance Combined

For each service provided in accordance with 11.1.1 and 11.1.2 preceding, combined, the rates and charges will be developed on an individual case basis.

11.2.4 Cable-Only Facilities

For each service provided in accordance with 11.1.3 preceding, the rates and charges will be developed on an individual case basis.

12. Specialized Services or Arrangements

12.1 General

Specialized Services or Arrangements may be provided by the Company, at the request of a customer, on an individual case basis if such service or arrangements meet the following criteria:

(A) The requested service or arrangements are not offered under other sections of this tariff.

(B) The facilities utilized to provide the requested service or arrangements are a type normally used by the Company in furnishing its other services.

(C) The requested service or arrangements are provided within a LATA.

(D) The requested service or arrangements are compatible with other Company services, facilities, and its engineering and maintenance practices.

(E) This offering is subject to the availability of the necessary Company personnel and capital resources.

12.2 Move Charges

(A) When service without a maximum termination liability charge associated with it is moved to a different building, the nonrecurring charge applies; when moved to a new location in the same building, a charge of on-half the nonrecurring charge applies.

(B) When service with a maximum termination liability charge associated with it is moved and is reinstalled at a new location, the customer may elect:

- to pay the unexpired portion of the maximum termination liability charge for the service, if any, with the application of a nonrecurring charge and the establishment of a new maximum termination liability charge for such service at the new location, or

12. Specialized Services or Arrangements (Cont'd)

12.2 Move Charges (Cont'd)

(B) (Cont'd)

- to continue service subject to the unexpired portion of the maximum termination liability charge, if any, and pay the estimated costs of moving such service, provided that the customer requests these charges be quoted prior to ordering the service move. Charges for moving such service will be based on estimated costs attributable to the move.

Move charges include the estimated costs of removal, restoration of services or facilities necessitated by the move, transportation, storage, reinstallation, engineering, labor, supervision, materials, administration, and any other specific items or cost directly attributable to the move.

12.3 Rates and Charges

Rates and charges, and additional regulations if applicable, for Specialized Service or Arrangements provided on an individual case basis are filed following:

13. Additional Engineering, Additional Labor and Miscellaneous Services

In this section normally scheduled working hours are an employee's scheduled work period in any given calendar day (e.g., 7:00 a.m. to 4:00 p.m.) for the application of rates based on working hours.

13.1 Additional Engineering

Additional Engineering will be provided by the Company at the request of the customer only when:

(A) A customer requests additional technical information after the Company has already provided the technical information normally included on the Design Layout Report (DLR) as set forth in 6.1.5 and 7.1.6 preceding.

(B) Additional engineering time is incurred by the Company to engineer a customer's request for a customized service as set forth in 7.2 preceding.

(C) A customer requests a design change, additional engineering time is incurred by the Company for the engineering review as set forth in 5.2.3(C) preceding. The charge for additional engineering will apply whether or not the customer authorizes the Company to proceed with the design change.

(D)
(D)

The Company will notify the customer that additional engineering charges, as set forth in 13.1.1 following, will apply before any additional engineering is undertaken.

13. Additional Engineering, Additional Labor and Miscellaneous Services (Cont'd)

13.1 Additional Engineering (Cont'd)

13.1.1 Charges for Additional Engineering

The charges for Additional Engineering are as follows:

Additional Engineering Periods		First Half Hour or Fraction Thereof	Additional Half Hour or Fraction Thereof	
(A) Basic Time, normally scheduled working hours, per engineer		$48.93	$26.54	(T)
(B) Overtime outside of normally scheduled working hours, per engineer	(D)	54.71	32.32	(T)

13. Additional Engineering, Additional Labor and Miscellaneous Services (Cont'd)

13.2 Additional Labor

Additional labor is that labor requested by the customer on a given service and agreed to by the Company as set forth in 13.2.1 through 13.2.5 following. The Company will notify the customer that additional labor charges as set forth in 13.2.6 following will apply before any additional labor is undertaken.

13.2.1 Overtime Installation

Overtime installation is that Company installation effort outside of normally scheduled working hours.

13.2.2 Overtime Repair

Overtime repair is that Company maintenance effort performed outside of normally scheduled working hours.

13.2.3 Stand By

Stand by includes all time in excess of one-half (1/2) hour during which Company personnel stand by to make cooperative tests with a customer to verify facility repair on a given service.

13.2.4 Testing and Maintenance with Other Telephone Companies

Testing and Maintenance with Other Telephone Companies is that additional testing, maintenance or repair of facilities which connect to facilities of other telephone companies, which is in addition to normal effort required to test, maintain or repair facilities provided solely by the Company.

13.2.5 Reserved For Future Use

13. Additional Engineering, Additional Labor and Miscellaneous Services (Cont'd)

13.2 Additional Labor (Cont'd)

13.2.6 Other Labor

Other labor is that additional labor not included in 13.2.1 through 13.2.4 preceding and labor incurred to accommodate a specific customer request that involves only labor which is not covered by any other section of this tariff.

13.2.7 Charges for Additional Labor

The charges for additional labor are as follows:

Additional Labor Periods		First Half Hour or Fraction Thereof	Additional Half Hour or Fraction Thereof	
(A) Basic Time, normally scheduled working hours, per technician (D)		$46.95	$24.54	(T)

13. Additional Engineering, Additional Labor and Miscellaneous Services (Cont'd)

13.2 Additional Labor (Cont'd)

13.2.7 Charges for Additional Labor (Cont'd)

Additional Labor Periods		(D)	First Half Hour or Fraction Thereof	Additional Half Hour or Fraction Thereof
(B)	Overtime, outside of normally scheduled working hours, on a scheduled work day, per technician *	(D)	$51.35	$28.95

* A call out of a Company employee at a time not consecutive with the employee's scheduled work period is subject to a minimum charge of three hours.

13. Additional Engineering, Additional Labor and Miscellaneous Services (Cont'd)

13.2 Additional Labor (Cont'd)

13.2.7 Charges for Additional Labor (Cont'd)

Additional Labor Periods		First Half Hour or Fraction Thereof	Additional Half Hour or Fraction Thereof
(C) Premium time, outside of scheduled work day, per technician *	(D)	$55.74	$33.34

* A call-out of a Company employee is subject to a minimum charge of three hours.

13. Additional Engineering, Additional Labor and Miscellaneous Services (Cont'd)

13.3 Miscellaneous Services

13.3.1 Maintenance of Service

(A) When a customer reports a trouble to the Company for clearance and no trouble is found in the Company's facilities, the customer shall be responsible for payment of a Maintenance of Service charge for the period of time from when Company personnel are ***dispatched to*** when the work is completed. (C)
Failure of Company personnel to find trouble in Company facilities will result in no charge if the trouble is actually in those facilities, but not discovered at the time.

(B) The customer shall be responsible for payment of a Maintenance of Service charge when the Company dispatches ***personnel, and*** the trouble is in (C)
equipment or communications systems provided by other than the Company or in detariffed CPE provided by the Company.

If either (A) or (B) preceding, no credit allowance will be applicable for the interruption involved if the Maintenance of Service charge applies.

(C) The charges for Maintenance of Service are applied on a per half hour, per technician basis at the rates specified for additional labor set forth in Section 13.2.7 preceding.

13. Additional Engineering, Additional Labor and Miscellaneous Services (Cont'd)

13.3 Miscellaneous Services (Cont'd)

(D)

(D)

13. Additional Engineering, Additional Labor and Miscellaneous Services (Cont'd)

13.3 Miscellaneous Services (Cont'd)

(D)

(D)

13. Additional Engineering, Additional Labor and Miscellaneous Services (Cont'd)

13.3 Miscellaneous Services (Cont'd)

13.3.2 Reserved For Future Use

13. Additional Engineering, Additional Labor and Miscellaneous Services (Cont'd)

13.3 Miscellaneous Services (Cont'd)

13.3.3 Presubscription

(A) Presubscription is a procedure whereby an end user # may select and designate to the Company an Interexchange Carrier (IC) to access, without dialing an access code, for intraLATA and interLATA intrastate calls. The end user may select one (1) IC for both intraLATA and interLATA calls or they may select one (1) IC for their interLATA calls and a different IC or the Company for intraLATA calls. The selected IC is referred to as the end user's primary IC. The presubscription procedure also allows the agent* representing a pay telephone to select and designate to the Company an IC to access, without dialing an access code, for intrastate intraLATA and interLATA calls.

(B) Presubscription of residence and business lines and/or trunks is furnished in accordance with the detailed provisions of the Federal Communications Commission's Allocation Plan. The plan with all appendices is available for inspection at the main building of the Federal Communications Commission in the Public Reference Room of the Tariff Division. Copies may be obtained from the Federal Communications Commission's Commercial Contractor.

The same detailed provisions also apply to pay telephone presubscription for end offices converting to equal access.

For purposes of this Section, the term end user also includes Competitive Local Exchange Carriers (CLECs) that are certified to resell local exchange telecommunications services.

* An agent is the person or persons who have the legal authority to give the Company permission for the placement of pay telephones on their premises and who control access to or usage of the pay telephone.

13. Additional Engineering, Additional Labor and Miscellaneous Services (Cont'd)

13.3 Miscellaneous Services (Cont'd)

13.3.3 Presubscription (Cont'd)

This page is reserved for future use. (C)
(D)

(D)

13. Additional Engineering, Additional Labor and Miscellaneous Services (Cont'd)

13.3 Miscellaneous Services (Cont'd)

13.3.3 Presubscription (Cont'd)

This page is reserved for future use. (C)
(D)

(D)

13. Additional Engineering, Additional Labor and Miscellaneous Services (Cont'd)

13.3 Miscellaneous Services (Cont'd)

13.3.3 Presubscription (Cont'd)

This page is reserved for future use. (C)
(D)

(D)

13. Additional Engineering, Additional Labor and Miscellaneous Services (Cont'd)

13.3 Miscellaneous Services (Cont'd)

13.3.3 Presubscription (Cont'd)

(C) Presubscription Charge Application (T)

(D)

(D)

(1) New end users or agents, who will be served by end offices equipped with equal access, will be asked to select a primary IC for both intraLATA and interLATA calls or select one (1) IC for their interLATA calls and a different IC or the Company for intraLATA calls at the time they place an order with the Company for Telephone Exchange Service. A confirming notice will be mailed to the new end user or agent when an IC is verbally chosen. New end users or agents who return confirmation notices within thirty (30) days identifying an IC different from that given verbally will have such selection processed without charge. (T)

New end users or agents will be offered a list of participating Carriers to aid their selection of primary IC. There will be no charge for this initial selection.

After the end user's or agent's initial primary IC selection, for any change thereafter in selection for an intraLATA IC, interLATA IC or a change in both, a charge, as set forth in ***(E)*** following, applies. (M) (M)

(M) Material now appearing on this page previously appeared on Third Revised Page 533.

13. Additional Engineering, Additional Labor and Miscellaneous Services (Cont'd)

13.3 Miscellaneous Services (Cont'd)

13.3.3 Presubscription (Cont'd)

(C) ***Presubscription Charge Application*** (Cont'd) (T)

(D)

(D)

(M)
|
(M)

(2) End users may designate that they do not want a primary IC. This choice is considered a valid selection and a Presubscription Charge will apply to any subsequent change. This "no primary IC" designation is not available to pay telephone agents. (T)

(3) Should an IC elect to discontinue Feature Group D Service in an end office converting to equal access prior to the conversion date, or within two (2) years after the introduction of Feature Group D in converted end office, the IC shall contact in writing all end users and agents who selected, or were allocated to, the canceling IC as their designated IC. Such written notification must advise these end users and agents of the IC cancellation, request that the end users or agents select a new IC, and state that the canceling IC will pay the Change Charge. (T)

For a period of two (2) years following the IC's discontinuance of Feature Group D Service, the Company will bill the canceling IC the Change Charge for each end user and agent that is currently designated to the IC at the time of discontinuance.

(M) Material previously appearing on this page now appears on Page 532.

13. Additional Engineering, Additional Labor and Miscellaneous Services (Cont'd)

13.3 Miscellaneous Services (Cont'd)

13.3.3 Presubscription (Cont'd)

(C) ***Presubscription Charge Application*** (Cont'd) (T)

(D)

(4) The Company will make post conversion changes in the end user's or agents PIC assignment pursuant to an IC provided list of customers, accepted by the Company under the conditions set ***forth preceding***. Should an end user or agent dispute authorization of the change in PIC assignment, the Company ***will place the end user or agent on the previous carrier's network where possible and the carrier will be billed in accordance with 13.3.3(D) following.*** (T) (T) (C) (C)

(D) ***Unauthorized PIC Carrier Restoration*** (N)

An Unauthorized PIC Carrier Restoration is a change in the preferred PIC assignment that the end user or agent denies authorizing. If an end user or agent denies requesting the change in PIC assignment as submitted by the IC, the alleged unauthorized IC will be assessed the PIC change charge as set forth in 13.3.3(E) for the following:

- ***Changing the end user or agent to the disputed IC, and;***

- ***Placing the end user or agent back on their previous IC's network.*** (N)

(M)

(M)

(M) Material previously appearing on this page now appears on Page 534.1.

13. Additional Engineering, Additional Labor and Miscellaneous Services (Cont'd)

13.3 Miscellaneous Services (Cont'd)

13.3.3 Presubscription (Cont'd)

(E) The nonrecurring charge for a change in presubscription is as follows: (T) (M)

	Nonrecurring Charge
- Per Line or Trunk	
- Primary InterLATA Carrier	$5.00 *
- Primary IntraLATA Carrier	5.00 *

(M)

(D)

(D)

* This charge is billed to the end user which is the subscriber to the Telephone Exchange Service, the agent of the pay telephone, except as set forth in ***(C)(3)*** and ***(4)*** preceding or in situations when such charges would be billed to an IC. (M) (T) (M)

(D)
(D)

(M) Material now appearing on this page previously appeared on Fourth Revised Page 534.

13. Additional Engineering, Additional Labor and Miscellaneous Services (Cont'd)

13.3 Miscellaneous Services (Cont'd)

13.3.3 Presubscription (Cont'd)

This page is reserved for future use. (C)
(D)

(D)

13. Additional Engineering, Additional Labor and Miscellaneous Services (Cont'd)

13.3 Miscellaneous Services (Cont'd)

13.3.3 Presubscription (Cont'd)

This page is reserved for future use. (C)
(D)

(D)

13. Additional Engineering, Additional Labor and Miscellaneous Services (Cont'd)

13.3 Miscellaneous Services (Cont'd)

13.3.3 Presubscription (Cont'd)

(F) Merger/Acquisition Presubscription Service

(1) Service Description

Merger/Acquisition Presubscription is an optional miscellaneous service designed to assist Interexchange Carriers (ICs) in consolidating multiple Carrier Identification Codes (CICs).

(2) Regulations

When an Interexchange Carrier (IC) is involved in an acquisition or merger, the Company will convert each presubscribed line from the acquired company's CIC(s) to those of the acquiring company. The Company will work cooperatively with the acquiring IC to determine a due date for the requested presubscription changes. The acquiring IC is responsible for notifying end user customers of the change in their presubscribed Carrier.

IC requests for end user presubscription changes in order to consolidate multiple CIC codes resulting from mergers or acquisitions will be subject to the Presubscription Change Charges set forth in (F)(3) following.

(3) Rates and Charges

The nonrecurring charge for Merger/Acquisition Presubscription Changes is as follows:

	Nonrecurring Charge
- Per Business or Residence Line or Trunk	$1.00

13. Additional Engineering, Additional Labor and Miscellaneous Services (Cont'd)

13.3 Miscellaneous Services (Cont'd)

13.3.4 ***Reserved for Future Use*** (C)

(D)

(D)

13. Additional Engineering, Additional Labor and Miscellaneous Services (Cont'd)

13.3 Miscellaneous Services (Cont'd)

13.3.4 ***Reserved for Future Use*** (Cont'd) (C)

(D)

(D)

13. Additional Engineering, Additional Labor and Miscellaneous Services (Cont'd)

13.3 Miscellaneous Services (Cont'd)

13.3.4 ***Reserved for Future Use*** (Cont'd) (C)

(D)

(D)

13 .Additional Engineering, Additional Labor and Miscellaneous Services (Cont'd)

13.3 Miscellaneous Services (Cont'd)

13.3.4 ***Reserved for Future Use*** (Cont'd) (C)

(D)

(D)

13. Additional Engineering, Additional Labor and Miscellaneous Services (Cont'd)

13.3 Miscellaneous Services (Cont'd)

13.3.4 ***Reserved for Future Use*** (Cont'd) (C)

(D)

(D)

13. Additional Engineering, Additional Labor and Miscellaneous Services (Cont'd)

13.3 Miscellaneous Services (Cont'd)

13.3.5 Testing Services

Testing Services offered under this Section of the Tariff are optional and subject to rates and charges as set forth in 13.3.5(C) following. Other Testing Services provided by the Company in association with Access Services are furnished at no additional charge. These other Testing Services are described in 6.1.6 and 7.1.7 preceding.

Testing Services are normally provided by Company personnel at Company locations. However, provisions are made in (A)(3), (A)(4), (B)(2) and (B)(3) following for a customer to request Company personnel to perform Testing Services at the customer's premises.

The offering of Testing Services under this Section of the Tariff is made subject to the availability of the necessary qualified personnel and test equipment at the various test locations mentioned in (A), (B) and (C) following.

In order to facilitate scheduling of the Company's test equipment and personnel, the customer should request any desired Additional Tests with sixty (60) days advance notice. Whenever feasible, the Company will accommodate requests with less than sixty (60) days advance notice.

(A) Switched Access Service

Testing Services for Switched Access are comprised of (a) tests which are performed during the installation of a Switched Access Service, i.e., Acceptance Tests, (b) tests which are performed after acceptance of such Access Services by a customer which are without charge, i.e., In-Service Testing and (c) tests which are performed during or after acceptance of such Access Services by a customer for which additional charges apply, i.e., Additional Tests.

13. Additional Engineering, Additional Labor and Miscellaneous Services (Cont'd)

13.3 Miscellaneous Services (Cont'd)

13.3.5 Testing Services (Cont'd)

(A) Switched Access Service (Cont'd)

Acceptance Tests, furnished to the customer at no additional charge, are those tests performed by the Company at the time of installation, as set forth in 6.1.6 preceding, which are required to establish Switched Access Service.

In-Service Tests, furnished to the customer at no additional charge, are those tests performed by the Company at the request of the customer and may be done on an automatic basis (no Company or customer technicians involved), cooperative basis (Company technician(s) involved at Company office(s) and customer technician(s) involved at customer's premises) or manual basis (Company technician(s) involved at Company office(s) and at customer's premises). Additional Testing of Switched Access Services are subject to the charges set forth in (C) following.

Testing Services are ordered to the dial tone office for FGA Service, to the access tandem or end office switch for FGB Service (wherever the FGB Service is ordered) and to the end office for FGC and FGD Services. Testing Services for Directory Assistance Service not routed through an access tandem is ordered to a Directory Assistance location for each NPA.

13. Additional Engineering, Additional Labor and Miscellaneous Services (Cont'd)

13.3 Miscellaneous Services (Cont'd)

13.3.5 Testing Services (Cont'd)

(A) Switched Access Service (Cont'd)

(1) Additional Automatic Testing (AAT)

Additional Automatic Testing (AAT) of Switched Access Services (Feature Groups B, C and D), is a service where the customer provides remote office test lines and 105 test lines with associated responders or their functional equivalent. The customer may request, on a per test basis, gain-slope and c-noticed noise testing as well as the In-Service Tests (1004 Hz loss, c-message noise and balance) on an as needed or more than routine schedule subject to the availability of test equipment necessary to perform AAT tests.

When the customer requests AAT as set forth in this Section, the Company will notify the customer whether the line or trunk being tested passed or failed the requested test. Should the customer also desire a written report containing the specific technical results of the test, a nonrecurring charge will apply for each report requested. This nonrecurring charge is set forth in 13.3.5(C)(1)(e) following.

(2) Additional Cooperative Testing (ACT)

Additional Cooperative Testing (ACT) of Switched Access Services (Feature Groups A, B, C and D and Directory Assistance Service not routed through an access tandem), is available when the Company provides a technician at its office(s) and the customer provides a technician at its premises, with suitable test equipment to perform the required tests. The customer may request, on a per test basis, gain-slope and c-notched noise testing as well as the In-Service Tests (1004 Hz loss, c-message noise and balance) on an as needed or more than routine schedule.

13. Additional Engineering, Additional Labor and Miscellaneous Services (Cont'd)

13.3 Miscellaneous Services (Cont'd)

13.3.5 Testing Services (Cont'd)

(A) Switched Access Service (Cont'd)

(3) Additional Manual Testing (AMT)

Additional Manual Testing (AMT) of Switched Access Services (Feature Groups A, B, C, D and Directory Assistance Service not routed through an access tandem), is available when the Company provides a technician at its office(s) and at the customer's premises. The customer may request Additional Manual Tests on a per half hour, per technician basis, for gain-slope, c-notched noise as well as In-Service Tests (1004 Hz loss, c-message noise and balance) on an as needed or more than routine basis.

(4) Miscellaneous Additional Testing (MAT)

Miscellaneous Additional Testing (MAT) of Switched Access Services (Feature Groups A, B, C, D and Directory Assistance Service not routed through an access tandem) ordered on an automatic, cooperative or manual basis will consist of any test the customer may request, that is not expressly described in (1), (2) and (3) preceding, subject to the availability of the necessary qualified personnel and test equipment required to perform the requested test(s). Miscellaneous Additional Testing will be provided on a per half hour, per technician basis.

13. Additional Engineering, Additional Labor and Miscellaneous Services (Cont'd)

13.3 Miscellaneous Services (Cont'd)

13.3.5 Testing Services (Cont'd)

(A) Switched Access Service (Cont'd)

(5) Obligations of the Customer

(A) When the customer subscribes to Testing Services, as set forth in this Section, the customer shall provide the remote office line priming data to the Company, as appropriate to support In-Service Testing or AAT as set forth in 6.1.6 preceding.

(B) The customer shall also make the facilities to be tested available to the Company at times mutually agreed upon.

(B) Special Access Service

Testing Services for Special Access Services are comprised of tests which are performed during the installation of a Special Access Service i.e., Acceptance Tests and tests which are performed during or after acceptance of such access services by a customer for which additional charges apply, i.e., Additional Tests.

13. Additional Engineering, Additional Labor and Miscellaneous Services (Cont'd)

13.3 Miscellaneous Services (Cont'd)

13.3.5 Testing Services (Cont'd)

(B) Special Access Service (Cont'd)

Acceptance Testing, furnished to the customer at no additional charge, are those tests performed by the Company at the time of installation, as set forth in 7.1.7 preceding, which are required to establish service.

Additional Tests, as set forth in 13.3.5(B) and (C) following, are those tests performed by the Company at the request of the customer and may be done on a cooperative basis (Company technician(s) involved at Company office(s) and customer technician(s) involved at customer's premises), or manual basis (Company technician(s) involved at Company office(s) and at customer's premises). Additional testing special access services are subject to the charges as set forth in (C) following.

(1) Additional Cooperative Testing (ACT)

When a customer provides a technician at its premises, or at an end user's premises, with suitable test equipment to perform the required tests, the Company will provide a technician at its office for the purpose of conducting Additional Cooperative Testing on voice grade services. These tests may consist of the following:

- Attenuation Distortion (i.e., frequency response)
- Intermodulation Distortion (i.e., harmonic distortion)
- Phase Jitter
- Impulse Noise
- Envelope Delay Distortion
- Frequency Shift
- Echo Control

13. Additional Engineering, Additional Labor and Miscellaneous Services (Cont'd)

13.3 Miscellaneous Services (Cont'd)

13.3.5 Testing Services (Cont'd)

(B) Special Access Service (Cont'd)

(2) Additional Manual Testing (AMT)

When the Company provides a technician(s) at its office and the Company provides technician(s) at the customer's premises or at the end user's premises, Additional Manual Tests may be conducted. These tests may consist of the following:

- Attenuation Distortion (i.e., frequency response)
- Intermodulation Distortion (i.e., harmonic distortion)
- Phase Jitter
- Impulse Noise
- Envelope Delay of Distortion
- Frequency Shift
- Echo Control

(3) Miscellaneous Additional Testing (MAT)

Miscellaneous Additional Testing of Special Access Service ordered on an Cooperative or Manual basis will consist of any test the customer may request, that is not expressly described in (1) or (2) preceding, subject to the availability of the necessary qualified personnel and test equipment required to perform the requested test. Miscellaneous Additional Testing will be provided on a per half hour, per technician basis.

(4) Obligations of the Customer

When the customer subscribes to Testing Services, as set forth in this section, the customer shall make the facilities to be tested available to the Company at times mutually agreed upon.

13. Additional Engineering, Additional Labor and Miscellaneous Services (Cont'd)

13.3 Miscellaneous Services (Cont'd)

13.3.5 Testing Services (Cont'd)

(C) Rates and Charges

(1) Switched Access

(a) Additional Automatic Testing

The Additional Automatic Tests, as set forth following, may be ordered by the customer, at additional charges, 60 days prior to the start of the customer's prescribed schedule.

Additional Tests:		Per Test, Per Transmission Path	
1004 Hz loss		$2.01	(T)
C-Message Noise	(D)	2.01	(T)

13. Additional Engineering, Additional Labor and Miscellaneous Services (Cont'd)

13.3 Miscellaneous Services (Cont'd)

13.3.5 Testing Services (Cont'd)

(C) Rates and Charges (Cont'd)

(1) Switched Access (Cont'd)

(a) Additional Automatic Testing (Cont'd)

Additional Tests:		Per Test, Per Transmission Path	
Balance (return loss)	(D)	$2.01	(T)
Gain-Slope		2.01	
C-Notched Noise	(D)	2.01	(T)

13. Additional Engineering, Additional Labor and Miscellaneous Services (Cont'd)

13.3 Miscellaneous Services (Cont'd)

13.3.5 Testing Services (Cont'd)

(C) Rates and Charges (Cont'd)

(1) Switched Access (Cont'd)

(b) Additional Cooperative Testing

The Additional Cooperative Tests, as set forth following, may be ordered by the customer, at additional charges, 60 days prior to the start of the testing schedule as mutually agreed to by the customer and the Company.

Additional Tests:	(D)	Per Test, Per Transmission Path	
1004 Hz loss		$6.30	(T)
C-Message Noise	(D)	3.92	(T)

13. Additional Engineering, Additional Labor and Miscellaneous Services (Cont'd)

13.3 Miscellaneous Services (Cont'd)

13.3.5 Testing Services (Cont'd)

(C) Rates and Charges (Cont'd)

(1) Switched Access (Cont'd)

(b) Additional Cooperative Testing (Cont'd)

Additional Tests:		Per Test, Per Transmission Path	
Balance (return loss)	(D)	$8.68	(T)
Gain-Slope		6.30	
C-Notched Noise	(D)	3.92	(T)

13. Additional Engineering, Additional Labor and Miscellaneous Services (Cont'd)

13.3 Miscellaneous Services (Cont'd)

13.3.5 Testing Services (Cont'd)

(C) Rates and Charges (Cont'd)

(1) Switched Access (Cont'd)

(c) Additional Manual Testing

The Additional Manual Tests, as set forth following, may be ordered by the customer, at additional charges, 60 days prior to the start of the testing schedule as mutually agreed to by the customer and the Company:

Testing Periods		First Half Hour or Fraction Thereof	Each Additional Half Hour or Fraction Thereof	
Basic Time	(D)	$45.54	$23.81	(T)

13. Additional Engineering, Additional Labor and Miscellaneous Services (Cont'd)

13.3 Miscellaneous Services (Cont'd)

13.3.5 Testing Services (Cont'd)

(C) Rates and Charges (Cont'd)

(1) Switched Access (Cont'd)

(c) Additional Manual Testing (Cont'd)

Testing Periods		First Half Hour or Fraction Thereof	Each Additional Half Hour or Fraction Thereof	
Overtime *	(D)	$49.81	$28.08	(T)

* A call out of a Company employee at a time not consecutive with the employee's scheduled work period is subject to a minimum charge of four hours.

13. Additional Engineering, Additional Labor and Miscellaneous Services (Cont'd)

13.3 Miscellaneous Services (Cont'd)

13.3.5 Testing Services (Cont'd)

(C) Rates and Charges (Cont'd)

(1) Switched Access (Cont'd)

(c) Additional Manual Testing (Cont'd)

Testing Periods		First Half Hour or Fraction Thereof	Each Additional Half Hour or Fraction Thereof	
Premium Time*	(D)	$54.08	$32.34	(T)

* A call out of a Company employee is subject to a minimum charge of four hours.

13. Additional Engineering, Additional Labor and Miscellaneous Services (Cont'd)

13.3 Miscellaneous Services (Cont'd)

13.3.5 Testing Services (Cont'd)

(C) Rates and Charges (Cont'd)

(1) Switched Access (Cont'd)

(d) Miscellaneous Additional Testing

The Miscellaneous Additional Tests, as set forth following, may be ordered by the customer, at additional charges, 60 days prior to the start of the testing schedule as mutually agreed to by the customer and the Company.

Testing Periods		First Half Hour or Fraction Thereof	Each Additional Half Hour or Fraction Thereof	
Basic Time	(D)	$45.54	$23.81	(T)

13. Additional Engineering, Additional Labor and Miscellaneous Services (Cont'd)

13.3 Miscellaneous Services (Cont'd)

13.3.5 Testing Services (Cont'd)

(C) Rates and Charges (Cont'd)

(1) Switched Access (Cont'd)

(d) Miscellaneous Additional Testing (Cont'd)

Testing Periods		First Half Hour or Fraction Thereof	Each Additional Half Hour or Fraction Thereof	
Overtime *	(D)	$49.81	$28.08	(T)

* A call out of a Company employee at a time not consecutive with the employee's scheduled work period is subject to a minimum charge of four hours.

13. Additional Engineering, Additional Labor and Miscellaneous Services (Cont'd)

13.3 Miscellaneous Services (Cont'd)

13.3.5 Testing Services (Cont'd)

(C) Rates and Charges (Cont'd)

(1) Switched Access (Cont'd)

(d) Miscellaneous Additional Testing (Cont'd)

Testing Periods		First Half Hour or Fraction Thereof	Each Additional Half Hour or Fraction Thereof	
Premium Time*	(D)	$54.08	$32.34	(T)

* A call out of a Company employee is subject to a minimum charge of four hours.

13. Additional Engineering, Additional Labor and Miscellaneous Services (Cont'd)

13.3 Miscellaneous Services (Cont'd)

13.3.5 Testing Services (Cont'd)

(C) Rates and Charges (Cont'd)

(1) Switched Access (Cont'd)

(e) Provision of AAT Test Results to the Customer

		Nonrecurring Charge	
	(D)		
Provision of AAT test results for each trunk tested.			(T)
- Per Report Provided	(D)	$23.72	

13. Additional Engineering, Additional Labor and Miscellaneous Services (Cont'd)

13.3 Miscellaneous Services (Cont'd)

13.3.5 Testing Services (Cont'd)

(C) Rates and Charges (Cont'd)

(2) Special Access

(a) Additional Cooperative Testing

The Additional Cooperative Tests, as set forth following, may be ordered by the customer, at additional charges, 60 days prior to the start of the customer's prescribed schedule.

Testing Periods		First Half Hour or Fraction Thereof	Each Additional Half Hour or Fraction Thereof	
Basic Time	(D)	$46.95	$24.54	(T)

13. Additional Engineering, Additional Labor and Miscellaneous Services (Cont'd)

13.3 Miscellaneous Services (Cont'd)

13.3.5 Testing Services (Cont'd)

(C) Rates and Charges (Cont'd)

(2) Special Access (Cont'd)

(a) Additional Cooperative Testing (Cont'd)

Testing Periods		First Half Hour or Fraction Thereof	Each Additional Half Hour or Fraction Thereof	
Overtime*	(D)	$51.35	$28.95	(T)

* A call out of a Company employee at a time not consecutive with the employee's scheduled work period is subject to a minimum charge of four hours.

13. Additional Engineering, Additional Labor and Miscellaneous Services (Cont'd)

13.3 Miscellaneous Services (Cont'd)

13.3.5 Testing Services (Cont'd)

(C) Rates and Charges (Cont'd)

(2) Special Access (Cont'd)

(a) Additional Cooperative Testing (Cont'd)

Testing Periods		First Half Hour or Fraction Thereof	Each Additional Half Hour or Fraction Thereof	
Premium Time*	(D)	$55.74	$33.34	(T)

* A call out of a Company employee is subject to a minimum charge of four hours.

13. Additional Engineering, Additional Labor and Miscellaneous Services (Cont'd)

13.3 Miscellaneous Services (Cont'd)

13.3.5 Testing Services (Cont'd)

(C) Rates and Charges (Cont'd)

(2) Special Access (Cont'd)

(b) Additional Manual Testing

The Additional Manual Tests, as set forth following, may be ordered by the customer, at additional charges, 60 days prior to the start of the testing schedule as mutually agreed to by the customer and the Company.

Testing Periods		First Half Hour or Fraction Thereof	Each Additional Half Hour or Fraction Thereof	
Basic Time	(D)	$46.95	$24.54	(T)

13. Additional Engineering, Additional Labor and Miscellaneous Services (Cont'd)

13.3 Miscellaneous Services (Cont'd)

13.3.5 Testing Services (Cont'd)

(C) Rates and Charges (Cont'd)

(2) Special Access (Cont'd)

(b) Additional Manual Testing (Cont'd)

Testing Periods		First Half Hour or Fraction Thereof	Each Additional Half Hour or Fraction Thereof	
Overtime*	(D)	$51.35	$28.95	(T)

* A call out of a Company employee at a time not consecutive with the employee's scheduled work period is subject to a minimum charge of four hours.

13. Additional Engineering, Additional Labor and Miscellaneous Services (Cont'd)

13.3 Miscellaneous Services (Cont'd)

13.3.5 Testing Services (Cont'd)

(C) Rates and Charges (Cont'd)

(2) Special Access (Cont'd)

(b) Additional Manual Testing (Cont'd)

Testing Periods		First Half Hour or Fraction Thereof	Each Additional Half Hour or Fraction Thereof	
Premium Time *	(D)	$55.74	$33.34	(T)

* A call out of a Company employee is subject to a minimum charge of four hours.

13. Additional Engineering, Additional Labor and Miscellaneous Services (Cont'd)

13.3 Miscellaneous Services (Cont'd)

13.3.5 Testing Services (Cont'd)

(C) Rates and Charges (Cont'd)

(2) Special Access (Cont'd)

(c) Miscellaneous Additional Testing

The Miscellaneous Additional Tests, as set forth following, may be ordered by the customer, at additional charges, 60 days prior to the start of the testing schedule as mutually agreed to by the customer and the Company.

Testing Periods		First Half Hour or Fraction Thereof	Each Additional Half Hour or Fraction Thereof	
Basic Time	(D)	$46.95	$24.54	(T)

13. Additional Engineering, Additional Labor and Miscellaneous Services (Cont'd)

13.3 Miscellaneous Services (Cont'd)

13.3.5 Testing Services (Cont'd)

(C) Rates and Charges (Cont'd)

(2) Special Access (Cont'd)

(c) Miscellaneous Additional Testing (Cont'd)

Testing Periods		First Half Hour or Fraction Thereof	Each Additional Half Hour or Fraction Thereof	
Overtime*	(D)	$51.35	$28.95	(T)

* A call out of a Company employee at a time not consecutive with the employee's scheduled work period is subject to a minimum charge of four hours.

13. Additional Engineering, Additional Labor and Miscellaneous Services (Cont'd)

13.3 Miscellaneous Services (Cont'd)

13.3.5 Testing Services (Cont'd)

(C) Rates and Charges (Cont'd)

(2) Special Access (Cont'd)

(c) Miscellaneous Additional Testing (Cont'd)

Testing Periods		First Half Hour or Fraction Thereof	Each Additional Half Hour or Fraction Thereof	
Premium Time*	(D)	$55.74	$33.34	(T)

* A call out of a Company employee is subject to a minimum charge of four hours.

13. Additional Engineering, Additional Labor and Miscellaneous Services (Cont'd)

13.3 Miscellaneous Services (Cont'd)

13.3.6 Provision of Access Service Billing Information (ASBI)

(A) The customer shall select the medium in which its official Access Service bills and customer service records are to be provided. This selection shall be made on a per account basis and shall be submitted in writing to the Company. The customer may request that Access Service Billing Information be provided via electronic data transfer, magnetic tape#, standard paper format or CD-ROM. Should the customer fail to make a selection, the official copy of the customer's Access Service bills and customer service records will be provided in standard paper format. (C)

(B) At the customer's option, additional copies of the current month's Access Service bill and/or customer service records will be provided via magnetic tape#, standard paper format, or CD-ROM at the charges specified in 13.3.6(D)(1) through (3) following. Requests for additional copies of the current month's bill and/or customer service records must be submitted in writing and shall specify the medium selected by the customer (i.e., magnetic tape#, standard paper format, or CD-ROM). (C) (C)

Additional copies of a customer's previous monthly Access Service bills will be provided via standard paper format or CD-ROM on an individual case basis. Requests for additional copies of previous monthly bills must be submitted in writing and shall specify the bill dates requested and the medium in which the copies are to be provided (i.e., standard paper format or CD-ROM).

The charges for providing additional copies of previous monthly access service bills will be developed by the Company on an individual case basis and filed in 13.3.12 following.

(C) Upon acceptance by the Company of an order for electronic data transfer, the Company will determine the period of time to implement the transmission of such material on an individual basis.

(D) The rates and charges for the provision of Access Service Billing Information (ASBI) are as follows:

This option is limited to existing customers receiving monthly bills or service and equipment records on magnetic tape as of March 21, 2001. (N) (N)

13. Additional Engineering, Additional Labor and Miscellaneous Services (Cont'd)

13.3 Miscellaneous Services (Cont'd)

13.3.6 Provision of Access Service Billing Information (ASBI) (Cont'd)

(D) (Cont'd)

		Monthly ***Rate***	Nonrecurring ***Charge***
(1) Additional copies of the customer's monthly bill or service and features records			
- Per copy per account in standard paper format	(D)	$16.21	$22.40

(D) (T) (D)

13. Additional Engineering, Additional Labor and Miscellaneous Services (Cont'd)

13.3 Miscellaneous Services (Cont'd)

13.3.6 Provision of Access Service Billing Information (ASBI) (Cont'd)

D) (Cont'd)

	Monthly Rate		
(2) Additional copies of the customer's monthly bill or service and features records			
- Per Magnetic Tape#	$50.00		(C)

	Monthly Rate	Nonrecurring Charge
(3) Additional copies of the customer's monthly bill or service and features records		
- Per CD-ROM	$85.00	$91.88

This option is limited to existing customers receiving monthly bills or service and equipment records on magnetic tape as of March 21, 2001. (N) (N)

13. Additional Engineering, Additional Labor and Miscellaneous Services (Cont'd)

13.3 Miscellaneous Services (Cont'd)

13.3.7 Billing Name and Address (BNA)

(A) Service Description

Billing Name and Address (BNA) service provides account detail of the Company's customers to interexchange carriers, operator service providers, enhanced service providers and any other provider of intrastate telecommunications services.

(B) General

(1) Upon acceptance of an order for BNA service, the Company will furnish account detail for each working telephone number submitted. Account detail consists of current data base information including the end user's billing name and billing address.

(2) Only current information which resides in the Company's data base will be provided. Customers ordering BNA services must accept BNA account detail on an "as is" basis.

(3) The Company will specify the location where requests for BNA service are to be received, and the format in which the requests are to be provided.

(4) The subscribing Customer must agree that BNA information will not be resold or otherwise provided to any other person, corporation, partnership or entity, other than the Customer's authorized billing agent, and that Billing Name and Address shall be used by the Customer or the Customer's authorized billing agent solely for:

(a) Billing its customers for using the Customer's telecommunications services,

(b) Any purpose associated with the equal access requirement of United States vs. AT&T, 552 F. Supp. 131 (D.D.C. 19982),

(c) Verification of service orders of new customers, identification of customers who have moved to a new address, fraud prevention and similar non-marketing purposes.

13. Additional Engineering, Additional Labor and Miscellaneous Services (Cont'd)

13.3 Miscellaneous Services (Cont'd)

13.3.7 Billing Name and Address (BNA) (Cont'd)

(B) General (Cont'd)

(5) Manual Request

(a) At the customer's option, the Company will provide BNA via manual request procedures.

(b) BNA service information will be provided by the Company in standard paper format via facsimile or first class U.S. mail.

(c) In situations where the customer requests more than forty (40) BNA records on a single order, the Company will provide the requested BNA information in a time frame mutually agreed to be the customer and the Company.

(6) Mechanized Request

(a) At the customer's option, the Company will provide BNA, subject to procedures established for Customer Account Record Exchange (CARE).

(b) The customer will submit their requests through proper CARE procedures, as revised or amended.

(c) The Company will provide a copy of the proper CARE procedures for BNA, as revised or amended, to each customer upon request.

13. Additional Engineering, Additional Labor and Miscellaneous Services (Cont'd)

13.3 Miscellaneous Services (Cont'd)

13.3.7 Billing Name and Address (BNA) (Cont'd)

(C) Rate Regulations

The number of BNA records for which charges apply will be accumulated by the Company, and billed to the customer on a monthly basis at the rates set forth in (D) following. An Access Order Charge as set forth in 5.2.2 preceding will also apply.

(D) Rates and Charges

	Per BNA Request Manual	Per BNA Request Mechanized	
(D)	$0.83	$0.13	(T)

13. Additional Engineering, Additional Labor and Miscellaneous Services (Cont'd)

13.3 Miscellaneous Services (Cont'd)

13.3.8 Reserved For Future Use (C)

(D)

(D)

13. Additional Engineering, Additional Labor and Miscellaneous Services (Cont'd)

13.3 Miscellaneous Services (Cont'd)

13.3.8 Reserved For Future Use (Cont'd) (C)

(D)

(D)

13. Additional Engineering, Additional Labor and Miscellaneous Services (Cont'd)

13.3 Miscellaneous Services (Cont'd)

13.3.8 Reserved For Future Use (Cont'd) (C)

(D)

(D)

13. Additional Engineering, Additional Labor and Miscellaneous Services (Cont'd)

13.3 Miscellaneous Services (Cont'd)

13.3.9 Telecommunications Service Priority (TSP) System

(A) Regulations

(1) The TSP System was developed to satisfy the requirements of the National Communications System (NCS) of the Federal Government and provides the regulatory, administrative and operational procedures authorizing the priority installation and/or priority restoration of National Security Emergency Preparedness (NSEP) telecommunications services. TSP applies only to NSEP telecommunications services, and authorizes the Company to take priority action in the provision and restoration of such services.

(2) Priority installation and/or priority restoration of NSEP telecommunications services shall be provided in accordance with Part 64.401, Appendix A, of the Federal Communications Commission's (FCC's) *Rules and Regulations*, and in (T)
accordance with the guidelines set forth in the
Telecommunications Service Priority (TSP) System for (T)
National Security Emergency Preparedness (NSEP) Service (T)
Vendor Handbook (***NCSH*** *3-1-2*) ***and Service User Manual*** (C)
(NCSM 3-1-1). (C)

(3) The customer requesting TSP service must be the same customer for which the associated access service is provided.

(4) Certain conditions may require that one or more customer services with a lower or no restoration priority be preempted in order to install or restore NSEP telecommunications service(s) of a higher priority. When such preemption is necessary, the Company will make every reasonable effort to notify the preempted customer of the action to be taken. Credit allowances for such service preemption shall be made according to the provisions set forth in ***Section*** 2.4.4(E) (T)
preceding.

13. Additional Engineering, Additional Labor and Miscellaneous Services (Cont'd)

13.3 Miscellaneous Services (Cont'd)

13.3.9 Telecommunications Service Priority (TSP) System (Cont'd)

(A) Regulations (Cont'd)

In obtaining TSP, the customer authorizes the Company to provide certain customer record information to the Manager, NCS, of the Federal Government so that the Government can maintain and administer its TSP System. This customer record information will include only the customer's name, TSP authorization code, Company circuit ID, customer telephone number and customer mailing address.

(6) In order to provide priority restoration service in compliance with Part 64.401, Appendix A of the FCC's Rules and Regulations, the Company may be unable to notify the customer in advance where additional labor charges apply, as set forth in ***13.2*** preceding, before the required additional labor is undertaken. The customer, in obtaining a restoration priority, recognizes that quoting charges and obtaining permission to proceed with the restoration of certain access services will cause unnecessary delays and, as a result, would be contrary to the aforementioned Rules and Regulations. In subscribing to TSP, the customer recognizes this condition and grants the Company the right to quote charges after the restoration has been completed. (Z)

(7) When an assigned restoration priority is discontinued or revoked, and the associated access service is continued in service, no charge applies for such a discontinuance.

13. Additional Engineering, Additional Labor and Miscellaneous Services (Cont'd)

13.3 Miscellaneous Services (Cont'd)

13.3.9 Telecommunications Service Priority (TSP) System (Cont'd)

(A) Regulations (Cont'd)

(8) Credit allowance provisions for an interruption in priority restoration are the same as those for the access service with which it is associated, as set forth in 2.4.4 preceding.

(9) When a customer requests that a priority installation be expedited (i.e., essential and emergency services), ***any applicable expedite charges will apply in addition to the priority installation charges set forth in 13.3.9(B)(1) following.*** (C) (C)

(10) In the event that the Company must utilize specially constructed facilities in the priority installation of an access service, the regulations, rates and charges set forth in 14. following for the service for which priority installation is required shall also apply.

(11) The activities performed by the Company in the provision of TSP are included in the following rate elements.

(a) Priority Installation - includes provision of confirmation information to the Manager, NCS, of the Federal Government, verification of TSP code assignments and installation preemption, if necessary.

(b) Priority Restoration Implementation - includes provision of confirmation information to the Manager, NCS, of the Federal Government and verification of TSP code assignment.

13. Additional Engineering, Additional Labor and Miscellaneous Services (Cont'd)

13.3 Miscellaneous Services (Cont'd)

13.3.9 Telecommunications Service Priority (TSP) System (Cont'd)

(A) Regulations (Cont'd)

(11) (Cont'd)

(c) Priority Restoration Change - includes provision of confirmation information an TSP code verification when a priority restoration level is changed on an associated access service.

(d) Priority Restoration Maintenance - includes TSP system administration and maintenance, reconciliation of TSP code levels, and restoration preemption, if necessary.

(B) Rates and Charges

The following rates and charges are in addition to all other rates and charges applicable for other services furnished under the provisions of this tariff which operate in conjunction with the TSP System. This includes, but is not limited to, Maintenance of Service as set forth in 13.3.1 preceding.

		Monthly Rate	Nonrecurring Charge	
(1)	Priority Installation* - ***per circuit***	None	$95.35	(T)
(2)	Priority Restoration Implementation* - ***per circuit***	None	$52.32	(T)

* When an access service is ordered with both priority installation and priority restoration the associated nonrecurring charge for each applies.

13. Additional Engineering, Additional Labor and Miscellaneous Services (Cont'd)

13.3 Miscellaneous Services (Cont'd)

13.3.9 Telecommunications Service Priority (TSP) System (Cont'd)

(B) Rates and Charges (Cont'd)

	Monthly Rate	Nonrecurring Charge	
(3) Priority Restoration Change*			(Z)
- ***per circuit***	None	$49.86	(T)
(4) Priority Restoration Maintenance and Administration			
- ***per circuit***	$21.27	None	(T)

* When an access service is ordered with both priority installation and priority restoration the associated nonrecurring charge for each applies.

13. Additional Engineering, Additional Labor and Miscellaneous Services (Cont'd)

13.3 Miscellaneous Services (Cont'd)

13.3.10 900 Access Blocking

(A) Description

900 Access Blocking is an optional end user feature that provides end office blocking, where technically feasible, of direct-dialed 1+900+, and 101XXXX+900+ calls by routing such calls to a recorded announcement. 900 Access Blocking is available for use with Feature Group A Switched Access Services for use with Feature Group A Switched Access Services described in Section 6 preceding and with services offered under the Company's local or general exchange tariffs which are provided to end users and to end user customers for the provision of telephones to transient members of the public or to transient users of an aggregator's premises.

(B) Regulations

End user requests for 900 Access Blocking will be accepted by the Company in a manner consistent with the regulations set forth in the Company's local or general exchange tariffs. Requests by subscribers to remove 900 Access Blocking services must be submitted to the Company in writing.

(C) Rates and Charges

Rates and charges for 900 Access Blocking are contained in Section 13.3.8 of the Embarq Local Operating Companies Tariff F.C.C. No. 1. (T)

13. Additional Engineering, Additional Labor and Miscellaneous Services (Cont'd)

13.3 Miscellaneous Services (Cont'd)

13.3.11 Carrier Call Transfer

(A) Service Description Service

Carrier Call Transfer Service allows a participating IC to receive an on-line transfer call from a Company Business Office via an Interexchange Carrier's (IC's) toll-free number. The IC must provide a toll-free number dedicated solely for the Carrier Call Transfer Service. In addition, the IC must assign the highest call priority to all calls transferred by the Company under Carrier Call Transfer. This will allow Company calls to be routed to the first available IC representative regardless of other calls waiting in queue.

(B) General

Carrier Call Transfer permits an end user customer to be transferred to the IC if the end user customer has a question pertaining to service establishment/relocation, product inquiries, literature requests or if the end user customer has a billing inquiry regarding the IC's charges. Transfers to ICs for billing inquiry will not be offered when the Company provides billing inquiry for the IC. Additional transfer activity will be available from the end user customer to the IC based upon mutual agreement between the Company and the IC.

(C) Rate Regulations

A charge will be assessed to the participating IC for each end user customer call transferred to the IC. Calls can only be transferred to the Primary Interexchange Carrier (PIC) of the end user customer. Rates for Carrier Call Transfer Service will be applied on a rate per transfer basis as set forth in (D) following.

13. Additional Engineering, Additional Labor and Miscellaneous Services (Cont'd)

13.3 Miscellaneous Services (Cont'd)

13.3.11 Carrier Call Transfer Service (Cont'd)

(D) Rates and Charges

Rate Per Transfer
$0.35

13. Additional Engineering, Additional Labor and Miscellaneous Services (Cont'd)

13.3 Miscellaneous Services (Cont'd)

13.3.12 Blocking and Screening Services

Central Office Blocking and Screening Services are provided on an as available basis depending upon the capabilities of various switching equipment. In addition, these services are generally available only in equal access exchanges. Accordingly these services may not be available in all exchanges.

(A) Originating Line Screening (OLS)

Originating Line Screening (OLS) provides call screening information to the operator to prevent operator send-paid (1+) calls from being billed to the line. This service is implemented by sending two (2) information digits (generally known as II digits) with the Automatic Number Identification (ANI) of the originating line. These digits are transmitted to all Carriers with the ANI. Additional information in the form of identification of the type of line, i.e., hotel, pay telephone, etc., may be provided to Carriers for use in databases. This feature informs the OSP of any restrictions associated with the line for outgoing calls to which a caller is attempting to bill a call. This option can be used with the Bill Number Screening (BNS) option.

(B) Billed Number Screening (BNS)

Billed Number Screening (BNS) provides automatic blocking of third number billing, collect billing or both. BNS is implemented via external databases that may be queried by Carriers as appropriate. The BNS feature is established for a particular billing number via service order. This feature informs the OSP of any restrictions regarding collect or third number calls billed to the line. This option can be used with the Originating Line Screening (OLS) option.

Blocking and Screening Services may also be available under the Company's General Subscriber Services Tariff. The services are available to all customers where technically feasible.

The following nonrecurring charges will be applied on a per line or per trunk basis. These rates are not intended to be duplicative with Blocking and Screening Services provided under the Company's General Subscriber Services Tariff. For example, a customer may request Billed Number Screening (BNS) from either the General Subscriber Services Tariff or from the Access Service Tariff.

13. Additional Engineering, Additional Labor and Miscellaneous Services (Cont'd)

13.3 Miscellaneous Services (Cont'd)

13.3.12 Block and Screening Service (Cont'd)

(C) Rates and Charges

		(D)	Nonrecurring Charge
(1)	Originating Line Screening (OLS)		
	- Per Line or Per Trunk		$20.00
(2)	Billed Number Screening (BNS)		
	- Per Line or Per Trunk	(D)	20.00

13. Additional Engineering, Additional Labor and Miscellaneous Services (Cont'd)

13.3 Miscellaneous Services (Cont'd)

13.3.13 Individual Case Filings

Rates and charges for miscellaneous services provided on an individual case basis are filed following:

Case No.	Customer Name	Description

14. Special Construction

14.1 General

This section contains regulations, rates, charges and liabilities applicable for the special Construction of intrastate facilities.

When Special Construction of facilities is required, the provisions of this tariff apply in addition to all regulations, rates and charges set forth in the appropriate service section of this tariff.

14.2 Regulations

14.2.1 Filing of Charges

Rates, charges and liabilities for Special Construction to provide facilities for use for one month or more are filed in 14.3 following, as appropriate.

Rates, charges and liabilities for the construction of facilities for use for less than one month are filed in supplements to this tariff.

14.2.2 Ownership of Facilities

The Company providing specially constructed facilities under the provisions of this tariff retains ownership of all such facilities.

14.2.3 Interval to Provide Facilities

Based on available information and the type of service ordered, the Company will establish a completion date for the specially constructed facilities. If the scheduled completion date cannot be met due to circumstances beyond the control of the Company, a new completion date will be established and the customer will be notified.

14. Special Construction (Cont'd)

14.2 Regulations (Cont'd)

14.2.4 Special Construction Involving Both Interstate and Intrastate Facilities

When Special Construction involves facilities to be used to provide both interstate and intrastate services, charges for the portion of the construction used to provide intrastate service shall be in accordance with this tariff. Charges for the portion of the construction used to provide interstate service shall be in accordance with the appropriate interstate tariff.

14.2.5 Payments for Special Construction

(A) Payment of Charges

All bills associated with Special Construction charges are due in accordance with the regulations in the appropriate service section of this tariff.

(B) Start/End of Billing

Billing of recurring charges for specially constructed facilities starts on the day after the facilities are made available for use. Billing accrues through and includes the day that the specially constructed facilities are discontinued.

14. Special Construction (Cont'd)

14.2 Regulations (Cont'd)

14.2.5 Payments for Special Construction (Cont'd)

(C) Credit Allowance for Service Interruptions

In the event of a service interruption involving a specially constructed facility, the customer shall receive a recurring monthly charge credit in accordance with the credit allowance provisions in the appropriate service section of this tariff associated with the affected services.

When an interruption continues due to the failure of the customer to authorize the replacement of facilities subject to a Replacement Charge, as specified, in 14.2.6(D)(1)(d) following, the credit allowance will be terminated on the seventh calendar day after the Company has provided the customer with written notification of the need for replacement. The credit allowance will resume on the day after the Company receives written authorization for the replacement from the customer.

14.2.6 Liabilities and Charges for Special Construction

(A) General

This section describes the various charges and liabilities that may apply when the Company provides Special Construction of facilities in accordance with an order for service. Written approval of all liabilities and charges must be provided to the Company prior to the start of construction.

14. Special Construction (Cont'd)

14.2 Regulations (Cont'd)

14.2.6 Liabilities and Charges for Special Construction (Cont'd)

(B) Conditions Requiring Special Construction

Special Construction is required when 1) facilities are not available to meet an order for service, and 2) the Company constructs facilities, and 3) one or more of the following conditions exist:

- The Company has no other requirement for the facilities requested.
- It is requested that service be furnished using a type of facility, or via a route, other than that which the Company would normally utilize in furnishing the requested service.
- More facilities are requested than would normally be required to satisfy an order.
- It is requested that construction be expedited, resulting in added cost to the Company.

(C) Development of Liabilities and Charges

Special Construction charges and liabilities will be developed based on estimated costs, except when actual costs are requested in writing prior to the start of Special Construction.

In order to meet a scheduled service date when actual costs are requested, an initial Special Construction filing may be based on estimated costs. Such a filing will be revised when actual costs are available.

14. Special Construction (Cont'd)

14.2 Regulations (Cont'd)

14.2.6 Liabilities and Charges for Special Construction (Cont'd)

(D) Types of Liabilities and Charges

Depending on the specifics associated with each individual case, one or more of the following Special Construction charges and/or liabilities may be applicable:

(1) Nonrecurring Charge

A nonrecurring charge always applies and includes one or more of the following components:

(a) Case Preparation Charge

A nonrecurring charge always includes a case preparation charge component to cover the administrative expenses associated with preparing a Special Construction case and the associated tariff filing.

14. Special Construction (Cont'd)

14.2 Regulations (Cont'd)

14.2.6 Liabilities and Charges for Special Construction (Cont'd)

(D) Types of Liabilities and Charges (Cont'd)

(1) Nonrecurring Charge (Cont'd)

(b) Expediting Charge

A nonrecurring charge may include an expediting charge when it is requested that Special Construction be completed on an expedited basis. The charge equals the difference in estimated cost between expedited and nonexpedited construction.

(c) Optional Payment

An optional payment charge may be included in the nonrecurring charge in association with a type of facility or route other than that which the Company would normally use in furnishing the requested service if lower recurring monthly charges are desired for the specially constructed facilities. This charge is equal to the excess installed cost or the total nonrecoverable cost, whichever is less. This election must be made in writing before Special Construction starts. If this election is coupled with the actual cost option, the optional payment charge will reflect the actual cost of the specially constructed facilities.

14. Special Construction (Cont'd)

14.2 Regulations (Cont'd)

14.2.6 Liabilities and Charges for Special Construction (Cont'd)

(D) Types of Liabilities and Charges (Cont'd)

(1) Nonrecurring Charge (Cont'd)

(d) Replacement Charge

If any portion of specially constructed facilities for which an optional payment charge has been paid requires replacement involving capital investment, a replacement charge will apply. This charge will be in the same ratio to the total replacement costs as the initial optional payment charge was to the installed cost of the original specially constructed facilities. If any portion of the facilities subject to the replacement charge fails, service will not be restored until notification is provided in writing that replacement is required and such replacement is ordered.

(e) Rearrangement Charge

If the Company is requested to rearrange existing specially constructed facilities, a nonrecurring charge equal to the cost of any additional Special Construction will apply.

14. Special Construction (Cont'd)

14.2 Regulations (Cont'd)

14.2.6 Liabilities and Charges for Special Construction (Cont'd)

(D) Types of Liabilities and Charges (Cont'd)

(1) Nonrecurring Charge (Cont'd)

(f) Special Construction of Facilities for Use for less than One Month

When the Company is requested to construct facilities to provide service for less than one month, a nonrecurring charge only applies. In addition to the case preparation charge component, this nonrecurring charge recovers all elements of cost, including engineering, shipping of equipment, equipment installation, line-up, equipment leasing, space rental, equipment removal, and any other costs associated with the construction of the facilities.

(2) Maximum Termination Liability and Termination Charge

A Maximum Termination Liability is equal to the nonrecoverable costs associated with specially constructed facilities and is the maximum amount which could be applied as a Termination Charge if all specially constructed facilities were discontinued before the Maximum Termination Liability express.

14. Special Construction (Cont'd)

14.2 Regulations (Cont'd)

14.2.6 Liabilities and Charges for Special Construction (Cont'd)

(D) Types of Liabilities and Charges (Cont'd)

(2) Maximum Termination Liability and Termination Charge (Cont'd)

The liability period is equal to the average life of the account associated with the specially constructed facilities. The liability period is generally expressed in terms of an effective and expiration date.

The Maximum Termination Liability is filed with the initial tariff filing in decreasing amounts at ten-year intervals over the average account life of the facilities. In the event that the average account life of the facilities is not an even multiple of ten, the last increment will reflect the appropriate number of years remaining.

Example Illustrating a 27-Year Average Account Life

Maximum Termination Liability	Effective Date	Expiration Date
$10,000	6/1/84	6/1/94
$ 7,000	6/1/94	6/1/04
$ 3,000	6/1/04	6/1/11

14. Special Construction (Cont'd)

14.2 Regulations (Cont'd)

14.2.6 Liabilities and Charges for Special Construction (Cont'd)

(D) Types of Liabilities and Charges (Cont'd)

(2) Maximum Termination Liability and Termination Charge (Cont'd)

Prior to the expiration of each liability period, the customer has the option to (A) terminate the Special Construction case and pay the appropriate charges, or (B) extend the use of the specially constructed facilities for the new liability period.

The Company will notify the customer six months in advance of the expiration date of each ten-year liability period. The customer must provide the Company with written notification of least 30 days prior to the expiration of the liability period if termination is elected. Failure to do so will result in an automatic extension of the Special Construction case to the next liability period at the filed Maximum Termination Liability amount.

14. Special Construction (Cont'd)

14.2 Regulations (Cont'd)

14.2.6 Liabilities and Charges for Special Construction (Cont'd)

(D) Types of Liabilities and Charges (Cont'd)

(2) Maximum Termination Liability and Termination Charge (Cont'd)

A Termination Charge may apply when all services using specially constructed facilities which have a tariffed Maximum Termination Liability are discontinued prior to the expiration of the liability period. The charge reflects the unamortized portion of the nonrecoverable costs at the time of termination, adjusted for net salvage and possible reuse. Administrative costs associated with the specific case of Special Construction and any cost for restoring a location to its original condition are also included. A Termination Charge may never exceed the filed Maximum Termination Liability.

A partial termination of specially constructed facilities will be provided, at the election of the customer. The amount of the Termination Charge associated with such partial termination is determined by multiplying the termination charge which would result if all services using the specially constructed facilities were discontinued, at the time partial termination is elected, by the percentage of specially constructed facilities to be partially terminated. A tariff filing will be made following a partial termination to list remaining Maximum Termination Liability amounts and the number of specially constructed facilities the customer will remain liable for.

14. Special Construction (Cont'd)

14.2 Regulations (Cont'd)

14.2.6 Liabilities and Charges for Special Construction (Cont'd)

(D) Types of Liabilities and Charges (Cont'd)

(2) Maximum Termination Liability and Termination Charge (Cont'd)

Example

A customer with a filed Maximum Termination Liability of $100,000 for 3600 specially constructed facilities requests a partial termination of 900 facilities. The Termination Charge for all facilities, at the time of election if $60,000. The partial termination charge, in this example, is $60,000 X 900/3600, or $15,000.

(3) Annual Underutilization Liability and Underutilization Charge

Prior to the start of Special Construction, the Company and the customer will agree on (1) the quantity of facilities to be provided, and (2) the length of the planning period during which the customer expects to place the facilities in service. The planning period is hereinafter referred to as the Initial Liability Period (ILP). The ILP is listed in the tariff with an effective and expiration date.

Underutilization occurs only if, at the expiration date of the ILP and annually thereafter, less than 70 percent of the specially constructed facilities are in service at filed tariff service rates.

14. Special Construction (Cont'd)

14.2 Regulations (Cont'd)

14.2.6 Liabilities and Charges for Special Construction (Cont'd)

(D) Types of Liabilities and Charges (Cont'd)

(3) Annual Underutilization Liability and Underutilization Charge (Cont'd)

An annual underutilization liability amount is filed on a per unit basis (e.g., per cable pair) for each case of Special Construction. This amount is equal to the annual per unit cost and includes depreciation, maintenance, administration, return, taxes and any other costs identified in the supporting documentation provided at the time the Special Construction case is filed.

Upon the expiration of the ILP, the number of underutilized facilities, if any, are multiplied by the annual underutilization liability amount. This product is then multiplied by the number of years (including any fraction thereof) in the ILP to determine the underutilization charge.

Annually thereafter, the number of underutilized facilities, if any, existing on the anniversary of the ILP expiration date will be multiplied by the annual under utilization liability amount to determine the underutilization charge for the preceding 12 month period.

14. Special Construction (Cont'd)

14.2 Regulations (Cont'd)

14.2.6 Liabilities and Charges for Special Construction (Cont'd)

(D) Types of Liabilities and Charges (Cont'd)

(3) Annual Underutilization Liability and Underutilization Charge (Cont'd)

Example

A customer orders 100 services and the Special Construction of a 600 pair building riser cable is agreed to , based on the customer's 5 year facility requirements. The ILP, in this example, would be filed at 5 years. The annual underutilization liability is filed at $2.00 per pair. If 400 pairs were in service at the end of the ILP, there would be an underutilization of 20 pairs, i.e., 420 (70% of 600) - 400 = 20. The total underutilization charge for the first 5 years would be $200.00, or $2.00 per pair X 20 pairs X 5 years.

If 420 pairs are in service at the end of the 6th year, there is no underutilization, i.e., 420 - 420 = 0.

14. Special Construction (Cont'd)

14.2 Regulations (Cont'd)

14.2.6 Liabilities and Charges for Special Construction (Cont'd)

(D) Types of Liabilities and Charges (Cont'd)

(4) Recurring Monthly Charges

(a) Charge for Route or Type other than Normal

When Special Construction is requested using a route or type of facility other than that which the Company would normally use, a recurring monthly charge, in addition to the monthly rates for service, is applicable. The charge is equal to the difference between the recurring costs of the specially constructed facilities and the recurring costs of the facilities the Company would have normally used.

(i) When an Optional Payment Charge as set forth in 14.2.6(D)(1)(c) preceding has been elected, the recurring monthly charge will be reduced to include specially constructed facility operating expenses only.

(ii) If the actual cost option as set forth in 14.2.6(C) preceding has been elected, the recurring charge will be adjusted to reflect the actual cost of the new construction when the costs have been determined. This adjusted recurring charge is applicable from the start of service.

14. Special Construction (Cont'd)

14.2 Regulations (Cont'd)

14.2.6 Liabilities and Charges for Special Construction (Cont'd)

(D) Types of Liabilities and Charges (Cont'd)

(5) Lease Charge

This charge applies when the Company leases equipment in order to meet service requirements. The amount of the charge is equal to the net added cost to the Company caused by the lease

(6) Cancellation Charge

If a service order with which Special Construction is associated is canceled prior to the start of service, a cancellation charge will apply. The charge will include all nonrecoverable costs incurred by the Company in association with the Special Construction up to and including the time of cancellation.

14. Special Construction (Cont'd)

14.2 Regulations (Cont'd)

14.2.7 Deferral of Start of Service

The Company may be requested to defer the start of service which will use specially constructed facilities subject to the provisions set forth in the service section of this tariff under which service is being provided. Requests for Special Construction deferral must be in writing and are subject to the following regulations:

(A) Construction Has Not Begun

If the Company has not incurred any installation costs before receiving a request for deferral, no charge applies.

(B) Construction Has Begun

If the construction of facilities has begun before the Company receives a request for deferral, charges will vary as follows:

(1) All Services Are Deferred

When all services which will use specially constructed facilities are deferred, a charge based on the costs incurred by the Company during each month of the deferral will apply. Those costs include the recurring costs for that portion of the facilities already completed and any other costs associated with the deferral. The cost of any components of the nonrecurring charge which have been completed at the time of deferral will also apply.

14. Special Construction (Cont'd)

14.2 Regulations (Cont'd)

14.2.7 Deferral of Start of Service (Cont'd)

(B) Construction Has Begun (Cont'd)

(2) Some Services Are Deferred

When some services which will use the specially constructed facilities are deferred, the construction case will be completed and all Special Construction charges will apply.

(C) Construction Complete

If the construction of facilities has been completed before the Company receives a request for deferral, all Special Construction charges will apply.

14.2.8 Definitions

Actual Cost - The term "Actual Cost" denotes all costs charged against a specific case of Special Construction, including any appropriate taxes.

Annual Underutilization Liability - The Term "Annual Underutilization Liability" denotes a per unit amount which may be billed annually if fewer services are in use utilizing specially constructed facilities at filed tariff rates than were originally specially constructed.

Estimated Cost - The term "Estimated Cost" denotes all estimated costs that will be incurred in providing a specific case of Special Construction, including any appropriate taxes.

14. Special Construction (Cont'd)

14.2 Regulations (Cont'd)

14.2.8 Definitions (Cont'd)

Facilities - The term "Facilities" denotes any cable, poles, conduit, microwave or carrier equipment, wire center distribution frames, central office switching equipment, etc., utilized to provide intrastate services.

Initial Liability Period - The term "Initial Liability Period" denotes the initial planning period during which the customer expects to place specially constructed facilities in service.

Installed Cost - The term "Installed Cost" denotes the total investment (estimated or actual) required by the Company to provide specially constructed facilities.

Maximum Termination Liability - The term "Maximum Termination Liability" denotes the maximum amount which may be billed if all services using specially constructed facilities are terminated prior to the expiration of the Maximum Termination Liability Period.

Maximum Termination Liability Period - The term "Maximum Termination Liability Period" denotes the length of time for which a termination charge may apply if all services using specially constructed facilities are terminated.

Net Salvage - The term "Net Salvage" denotes the estimated scrap, sale, or trade-in value, less the estimated cost of removal. Cost of removal includes the costs of demolishing, tearing down, or otherwise disposing of the material and any other applicable costs. Since the cost of removal may exceed salvage value, net salvage may be negative.

14. Special Construction (Cont'd)

14.2 Regulations (Cont'd)

14.2.8 Definitions (Cont'd)

Nonrecoverable Cost - The term "Nonrecoverable Cost" denotes the cost of specially constructed facilities for which the Company has no foreseeable use should the service be terminated.

Normal Construction - The term "Normal Construction" denotes all facilities the Company would normally use to provide service in the absence of a requirement for Special Construction.

Normal Cost - The term "Normal Cost" denotes the estimated cost to provide services using normal construction.

Permanent Facilities - The term "Permanent Facilities" denotes facilities providing service for one month or more.

Recoverable Cost - The term "Recoverable Cost" denotes the cost of the specially constructed facilities for which the Company has a foreseeable reuse, either in place or elsewhere, should the service be terminated.

Termination Charge - The term "Termination Charge" denotes the portion of the Maximum Termination Liability that is applied as a nonrecurring charge when all services are discontinued prior to the expiration of the specified liability period.

14. Special Construction (Cont'd)

14.3 Rates and Charges

14.3.1 Charges to Provide Permanent Facilities to the Federal Government

This section contains Special Construction charges to provide permanent facilities to the Federal Government in accordance with this tariff. Charges are developed on an individual case basis and are filed following:

14. Special Construction (Cont'd)

14.3 Rates and Charges (Cont'd)

14.3.2 Charges to Provide Permanent Facilities Other Than to the Federal Government

This section contains Special Construction charges to provide permanent facilities other than to the Federal Government in accordance with this tariff. Charges are developed on an individual case basis and are filed following:

SOUTH CAROLINA (SC)

Case No.	Customer Name	Description
	Telecommunications Systems, Inc. P. O. Box 7308 Columbia, South Carolina 29202	Special Construction charges for provision of 360 pair voice grade facilities between Greenwood, South Carolina Central Office and customer designated premises on Greene Street, Greenwood, South Carolina.

Nonrecurring Charge	$1,904.00

Maximum Termination Liability	Effective Date	Expiration Date
$11,666.00	04/21/85	04/21/95
$ 5,833.00	04/21/95	04/21/05
Initial Liability Period	04/21/85	06/20/87

Annual Under-utilization Liability Charge - Per Pair	$16.00

15. Common Channel Signaling/Signaling System 7 (CCS/SS7) Database Services

15.1 Line Information Data Base (LIDB) Access Service

15.1.1 General

Line Information Data Base (LIDB) Access Service provides the customer the ability to access billing validation data contained on the Company's LIDB located in Johnson City and Bristol, Tennessee. The LIDB is accessed through the Company SS7 network which utilizes American National Standards Institute (ANSI) signaling protocol. Access to the Company's LIDB provides customers the ability to provide toll fraud protection by validating calling card and toll billing exception data and performing public telephone checks.

15.1.2 Description

LIDB Access Service is provided by the Company to its customers in support of alternate billing services. LIDB Access Service provides access to billing validation data, which resides on the Company database for use with alternate billing services. Alternate billing services allow customer's end users the ability to bill calls to an account not necessarily associated with the originating line. LIDB Access Service supports alternate billing services such as Calling Card, Collect Calls and Third Number Billing.

Customers participating in LIDB Access Service for purposes of obtaining billing validation data, which resides on the Company database, originate queries to the LIDB from an operator service system (OSS) identified by an originating point code (OPC). The LIDB query is routed through one of two Company interconnecting Signaling Transfer Points (STPs) located in Johnson City and Bristol, Tennessee, to the Company Regional Service Control Point (SCP) where the LIDB resides.

The requested billing validation data, in the form of signaling information, is passed back via either one of the two Company interconnecting STPs to the customer's designed OSS where the LIDB query was originated. The Company LIDB will receive and respond to Calling Card Service and Billed Number Screening queries as defined in Technical Reference ***Publications*** (C)
GR-246, FR-271, GR-905 and GR954. (C)

15. Common Channel Signaling/Signaling System 7 (CCS/SS7) Data Base Services (Cont'd)

15.1 Line Information Data Base (LIDB) Access Service (Cont'd)

15.1.2 Description (Cont'd)

LIDB Access Service will provide the following functions on a per query basis.

- Validation of a telecommunications calling card stored on LIDB.
- Determination of whether the billed line automatically rejects certain calls billed as collect or third number.
- Determine whether the billed line in the Billed Number Screening Query is a public telephone number using the "Service or Equipment Indicator" in the LIDB.

All access to the Company's LIDB will occur through two Company interconnecting STPs located in Johnson City and Bristol, Tennessee. The Company will provide customer interconnection to the Company interconnection STPs through its Common Channel Signaling/Signaling System 7 (CCS/SS7) Interconnection Service provided in 6.8.2 preceding.

(A) Limitations

Unless expressly authorized in writing by the customer and the Company, LIDB Access Service is not to be used for purposes other than those LIDB functions described in 15.1.2 preceding. LIDB Access Service is to be used for those services only on a call-by-call basis and data accessed on LIDB may not be stored elsewhere for future use.

Proprietary information resident in the Company LIDB is protected from authorized access may not be stored in a customer's database for any reason. All information related to alternate billing services is proprietary. Some examples of proprietary ***information are as*** follows: (Z)

15. Common Channel Signaling/Signaling System 7 (CCS/SS7) Data Base Services (Cont'd)

15.1 Line Information Data Base (LIDB) Access Service (Cont'd)

15.1.2 Description (Cont'd)

(A) Limitations (Cont'd)

- Billed Number (resides in the Company LIDB)
- PIN Number(s) (resides in the Company LIDB)
- Billed Number Screening (BNS) indicators (resides in the Company LIDB)
- Reports on LIDB usage
- Information related to billing for LIDB usage
- LIDB usage statistics

(B) Rate Categories

There are two basic elements, which apply to LIDB Access Service, Query Transport and Query:

(1) The Query Transport rate element provides for the transition facilities between the Company's STPs located in Johnson City and Bristol, Tennessee and the Company SCP where the LIDB resides.

(2) The Query rate element provides for the validation of calling card and toll billing exception data and performance of public telephone checks. For the validation purposed, LIDB Access Service customers will query the LIDB located in the Company SCP via the Company CCS/SS7 network. The LIDB will respond with a verification signal message back to the LIDB Access Service customer via the Company CCS/SS7 network.

The charges associated with Query Transport and Query are set forth in 15.1.6 following.

15. Common Channel Signaling/Signaling System 7 (CCS/SS7) Data Base Services (Cont'd)

15.1 Line Information Data Base (LIDB) Access Service (Cont'd)

15.1.2 Description (Cont'd)

(C) Acceptance Testing

The Company will perform testing of the LIDB Access Service in conjunction with CCS/SS7 Interconnection Service as outlined in Technical Reference ***Publications GR-905 and GR954.*** (C)

(D) Ordering Options and Conditions

LIDB Access Service is ordered under the Access Order provisions set forth in ***Section*** 5 preceding. Also, included in that section are other charges, which may be associated with ordering LIDB Access Service (e.g., Service Date Change Charges). (T)

15.1.3 Undertakings of the Company

In addition to the obligations of the Company set forth in ***Section*** 2 preceding, the Company has certain other obligations pertaining only to the provision of LIDB Access Service. These obligations are as follows: (T)

(A) LIDB Data Specifications

The Company's LIDB will contain a record for every working line number and Billed Number group, as defined in ***Section*** 2.6 preceding, served by the Company. Other exchange carriers who may store their data in the Company LIDB are requested to provide this data as well. (T)

The Company will administer its LIDB update process by use of a Data Base Administration System (DBAS). Updates contain information for calling card, collect and bill-to-third Party Alternate Billing Services (ABS) verification.

15. Common Channel Signaling/Signaling System 7 (CCS/SS7) Data Base Services (Cont'd)

15.1 Line Information Data Base (LIDB) Access Service (Cont'd)

15.1.3 Undertakings of the Company (Cont'd)

(A) LIDB Data Specifications (Cont'd)

The Company generates customer record service order update activity, which is electronically transferred to LIDB from the DBAS system. Mechanized updates (e.g. add, delete, modify customer accounts as customers move, order new service, disconnect service, or become delinquent on their account) are processed daily, 6 days per week, Monday through Saturday. Emergency updates for calling cards reported lost, stolen or otherwise compromised will be made 7 days per week, 24 hours per day.

ABS query usage within LIDB is monitored for unusual patterns, which may be indicators of abuse or attempted fraud. By using a threshold method, when validation queries for a specific LIDB record reach the Company established usage threshold level, the number is placed on an exception list and an investigator will determine the validity of the usage. If the usage is determined to be invalid, the investigator will immediately deactivate the record in LIDB.

Usage thresholds will be established by the Company. Thresholds may vary by class of end user account (e.g. residence, business). Usage thresholds are applied uniformly within LIDB, and will monitor combined query usage from all LIDB Access Service customers.

The Company will also establish usage thresholds which, when met by query activity to a calling card record, will automatically disable the record in LIDB. The number is placed on an exception list and an investigator will determine validity of the usage. If a calling card is automatically disabled and the usage is determined valid, the calling card will be reactivated in LIDB.

The Company will administer its LIDB to insure the provision of acceptable service levels to all customers. During periods of LIDB congestion, an automatic call gapping procedure will be utilized to control such congestion. The automatic call gapping procedure signals the switch and identifies the gap (how long the switch should wait before sending another query) and the duration (how long the switch should continue to perform gapping) according to the level of congestion. For example, during an overload condition, the automatic call gapping procedure will signal the switch when to being to drop one out of three of the queries received. This call gapping procedure will be applied uniformly to all users of the Company's LIDB service.

15. Common Channel Signaling/Signaling System 7 (CCS/SS7) Data Base Services (Cont'd)

15.1 Line Information Data Base (LIDB) Access Service (Cont'd)

15.1.3 Undertakings of the Company (Cont'd)

(A) LIDB Data Specifications (Cont'd)

The Company maintains the right to invoke manual intervention of the automatic call gapping procedure to preserve the integrity of the network.

(B) Provision of Billing Information

LIDB Access Service Queries received at the SCP are accumulated and records are generated identifying the number of queries processed by the originating point code (OPC) of the customer's Operator Service System (OSS) location. This information is delivered to the accounting office via tape or by teleprocessing for processing and billing. The query charges will be accumulated and billed to the LIDB Access Service customer each month.

The Company will provide sufficient information with the bill to enable the customer to determine how the billed amount was calculated. Included on the bill will be separate entries displaying the Billed Number Screening queries and the Calling Card Number queries.

Other reports may be provided as mutually agreed upon. Such agreements, provided on an individual case basis, may involve additional charges or conditions.

15.1.4 Obligations of the Customer

In additional to the obligations of the customer set forth in ***Section*** 2 preceding, the customer has certain specific obligations pertaining to the use of LIDB Access Service. These obligations are as follows: (T)

(A) LIDB Access Service Percent Intrastate Usage (PIU) Report

The customer shall provide to the Company a LIDB Access Service Percent Intrastate Usage (PIU) Report in accordance with the provisions specified in ***Section 2.3.14*** preceding. (T)

15. Common Channel Signaling/Signaling System 7 (CCS/SS7) Data Base Services (Cont'd)

15.1 Line Information Data Base (LIDB) Access Service (Cont'd)

15.1.5 Rate Regulations

This section contains the specific regulations governing the rates and charges that apply for LIDB Access Service.

(A) Description of Rates and Charges

There are two types of rates and charges that will apply to LIDB Access Service. These are usage rates and nonrecurring charges. These rates and charges are applied as set forth in (A) and (B) following. For billing purposes, each month is considered to have 30 days.

(1) Usage Rates

The usage rates (Query Transport and Query) for LIDB Access Service are applicable on a per query basis as described in 15.1.5.2 following.

(2) Nonrecurring Charges

Nonrecurring charges are one-time charges that apply for a specific activity (i.e., installation or change to an existing service). The nonrecurring charges that apply for installation of LIDB Access Service are described in (1) following. The nonrecurring charges that apply for service rearrangements are described in (2) following.

(a) Establishment of Service

Nonrecurring charges apply for each request for establishment of LIDB Access Service. The nonrecurring charges for the establishment of LIDB Access Service are as set forth in 5.2.2 preceding.

15. Common Channel Signaling/Signaling System 7 (CCS/SS7) Data Base Services (Cont'd)

15.1 Line Information Data Base (LIDB) Access Service (Cont'd)

15.1.5 Rate Regulations (Cont'd)

(A) Description of Rates and Charges (Cont'd)

(2) Nonrecurring Charges (Cont'd)

(b) Service Rearrangements

Service Rearrangements are changes to existing services which do not result in either a change in the minimum period requirements as set forth in 5.2.6 preceding or a change in the location designated by the OPC.

Changes which result in the establishment of new minimum period obligations are treated as a discontinuance of the existing service and establishment of a new service and all applicable nonrecurring charges will apply.

Certain service rearrangements, which are administrative in nature (as specified in 6.7.1(C)(3) preceding will be made without charge except as noted.

Provisions for service rearrangements for which nonrecurring charges will apply are set forth in 6.7.1(C)(3) preceding.

(B) Application of Rates and Charges

Rates and charges for LIDB Access Service are applied as follows:

(1) Query Transport

Query Transport is a usage rate charge, which applies to each query routed over transmission facilities between the Company's STPs in Johnson City and Bristol, Tennessee and the Company SCP where the LIDB resides. These charges are applied on a per query basis, and are accumulated over a monthly period and billed to the customer on a monthly basis.

15. Common Channel Signaling/Signaling System 7 (CCS/SS7) Data Base Services (Cont'd)

15.1 Line Information Data Base (LIDB) Access Service (Cont'd)

15.1.5 Rate Regulations (Cont'd)

(B) Application of Rates and Charges (Cont'd)

(2) Query

A usage rated Query Charge applies to each LIDB query received at the Company Service Control Point (SCP). Per query charges are accumulated over a monthly period and are billed to the customer on a monthly basis.

(C) Minimum Periods

LIDB Access Service is provided for a minimum of one month. When service is disconnected prior to the expiration of the minimum period, usage charges are applicable for the balance of the minimum period. If service is disconnected after the minimum period, usage charges will be based on the actual number of queries. For the purpose of administering this regulation, with respect to the determination of charges for fractional part of a month, every month is considered to have 30 days.

15.1.6 Rates and Charges

			Rate
(A)	Query Transport, per query	(D)	$0.0016
(B)	Query, per query	(D)	0.0366

16. ***Operator Services*** (C)

16.1 Operator Service Description (N)

Operator Services includes the service categories of Operator Transfer and Operator Inward Assistance. Operator Transfer and Operator Inward Assistance services are provided from OSS Tandems to the customer's premises in conjunction with the rules and regulations of the specified Access Services found in Sections 2, 3, 5, and 6 preceding. Operator Services are available at all Telephone Company end offices however may be unavailable in certain LATAs due to existing trunking arrangements. In locations where the provider of Operator Services is not the Telephone Company, availability of Operator Services is at the discretion of the Operator Services provider. If Operator Services are available, the Telephone Company rates are applicable and billed by the Telephone Company. In locations where the Telephone Company is the provider of Operator Services for other telephone companies, availability of Operator Services is contingent on the availability of Operator Services tariffs of that telephone company. The OSS Tandem locations are provided in National Exchange Carrier Association, Inc. Tariff F.C.C. No. 4.

16.1.1 Operator Transfer Service (OTS)

Operator Transfer is an originating service that provides call routing of 0- (the digit "0" with no additional digits) calls to a participating customer as requested by the calling end user. An Operator Transfer call is routed to the Telephone Company's OSS operator for completion to a destination outside the originating LATA when the calling party dials "0" and waits for an operator to assist with the call. The Telephone Company operator will, upon request, transfer the call to the calling end user's participating customer (i.e., the Telephone Company's Operator Transfer Service customer) of choice. If the calling end user has no specific customer preference, the OSS operator will consult reference information and offer to the calling party the name of a participating customer. The reference information is arranged to give all participating customers an equal opportunity of being offered to and chosen by the calling end user. After a selection is made by the calling end user, the operator shall key in the selected customer's Carrier Identification Code (CIC) and transfer the call. (N)

16. Operator Services (N)

16.1 Operator Service Description (Cont'd)

16.1.2 Operator Inward Assistance (OIA) Service

Operator Inward Assistance provides operator service functions on inward calls received from customers. Operator Inward Assistance is provided when a customer's operator contacts a Telephone Company operator requesting line status verification or verification with call interruption. Inward Assistance functions will be performed for only one telephone number per inward call received. The Inward Assistance service functions available are detailed as follows:

(A) Busy Line Verification - The operator will check the status of the requested telephone line to verify if there is conversation on the line and advise the requesting customer of the line status.

(B) Verification with Call Interruption - After verification of a conversation on the requested line is made, and upon request, the operator will interrupt and inform the called party of the waiting call. The operator only interrupts the ongoing call and does not complete the subsequent telephone call for the customer.

16.2 Manner of Provisioning

(A) Operator Services trunking between the customer's premises and the OSS Tandem is provisioned as either Switched Access Feature Group B, Feature Group C, or Feature Group D service and may be arranged, per the customer's request, as either one-way or two-way service. These trunk groups are established as final trunks and will be assigned data registers to obtain usage, peg count, and overflow attempt information. If a trunk(s) does not currently exist between the customer's premises and the OSS Tandem(s), the customer must establish Feature Group B or Feature Group D service to the Telephone Company's OSS Tandem(s). The Telephone Company will provide trunk side switching along with trunk answer and disconnect supervisory signaling to the customer. (N)

16. Operator Services (N)

16.2 Manner of Provisioning (Cont'd)

(B) When the OSS Tandem also functions as the Message Toll Service (MTS) Access Tandem, the customer may combine Operator Services traffic with its MTS Switched Access traffic between the OSS Tandem and the customer's premises provided the trunk group has the same signaling and routing requirements as specified for Operator Transfer or Operator Inward Assistance. However, Operator Services traffic may not be combined with MTS Switched Access traffic if the customer provides operator functionality or coin station control.

16.2.1 Operator Transfer

(A) The customer must order sufficient capacity between the OSS Tandem(s) and the customer's premises to serve Operator Transfer traffic originating from those end offices. The Telephone Company OSS Tandems send ten-digit ANI (NPA + 7-digit telephone number) for Feature Group D trunk groups with Equal Access signaling or Operator Services Address signaling and Feature Group C trunk groups with Traditional signaling. However, the Telephone Company OSS Tandems send seven-digit ANI for Feature Group C trunk groups with Operator Services signaling. Therefore, if the customer requires Operator Transfer calls separately identified by the originating NPA for the Feature Group C trunk group with Operator Services signaling, the customer must utilize a separate and final trunk group, from the OSS Tandem to their customer's premises, for each NPA served by that OSS Tandem.

(B) In order for the customer to provide full operator functionality (e.g., Operator Recall, Sequence Dialing, Time and Charge Quotation, and Emergency Ring-back) or coin control, the customer must order Operator Trunk - Pay Telephone for Feature Group C service or Operator Trunk - Full Feature for Feature Group D service. Full operator functionality is not required to provide operator transfer service. When coin control is provided, the customer must establish a separate and final trunk group for each type of end office operator/coin signaling (i.e., inband, expanded inband, and multi-wink) existing in the end offices served by the OSS Tandem. Operator Transfer is not available for coin sent-paid traffic. (N)

16. Operator Services (N)

16.2 Manner of Provisioning (Cont'd)

16.2.2 Signaling

(A) For Operator Transfer, the Telephone Company will provide traditional signaling for Feature Group B or Feature Group C service or Equal Access signaling for Feature Group D service. Customers providing operator functionality for operator traffic or coin control for pay telephone traffic will be provided with Operator Services signaling for Feature Group C or Operator Services Address signaling for Feature Group D service.

(B) For Operator Inward Assistance, the Telephone Company will provide traditional signaling for Feature Group B or Feature Group C service or Equal Access signaling for Feature Group D service.

16.2.3 Design Layout Report

Upon request, the Telephone Company will provide, to the customer, the make-up of facilities and services provided from the customer's premises to the OSS Tandem. This information will be provided in the form of a Design Layout Report. The Design Layout Report will be provided at no charge and will be reissued or updated whenever the facilities provided for the customer's use are materially changed. (N)

16. Operator Services (N)

16.2 Manner of Provisioning (Cont'd)

16.2.4 Design Blocking

Trunks between the customer's premises and the OSS Tandems will follow the normal Feature Group B, C, or D blocking criteria as set forth in Section 6.5.6 preceding. The Telephone Company will perform routine measurement functions to inform the customer that an adequate number of transmission paths are in service to meet the normal Feature Group B, C, or D design blocking levels. However, capacity levels and trunk quantities will be the responsibility of the customer.

16.2.5 Testing

Acceptance testing for Operator Services will be provided as set forth in Section 6.1.6 preceding. Testing Capabilities for Feature Group B, Feature Group C, and Feature Group D services utilized in conjunction with Operator Services will be provided as set forth in Sections 6.2.2(D), 6.2.3(D) and 6.2.4(D) preceding.

16.2.6 Interface Groups and Transmission Parameters

Operator Services will utilize the same interface groups and transmission specifications as specified in Sections 6.2.2(C), 6.2.3(C) and 6.2.4(C) preceding.

16.2.7 Ordering and Billing Options and Conditions

(A) Operator Transfer Service is ordered under the access order provisions as set forth in Section 5 preceding. The Access Order Charge applicable for Switched Access will apply per Access Order for the installation, addition, change, or rearrangement of Operator Transfer Service. In addition, other Access Order Charges (i.e., Service Date Change Charges, etc.) may apply. No access order is required to receive Operator Inward Assistance services.

(B) Billing for all Operator Services will occur on a monthly basis as other billing is performed, but will be rendered on a statement detailing the flat-rated charges for the entire state applicable to that customer for the specified monthly period. (N)

16. Operator Services (N)

16.3 Liability of the Telephone Company

In addition to the liability statements as set forth in Section 2 preceding, the following also applies.

(A) The Telephone Company's liability, if any, for its gross negligence or willful misconduct is not limited by this Tariff. With respect to any other claim or suit, by a customer or any others, for damages arising out of negligent mistakes, omissions, interruptions, delays or errors, defects in transmission, omission from or defects in the applicable list of customers or transfers to customers occurring in the course of furnishing service hereunder, the Telephone Company's liability, if any, shall not exceed an amount equivalent to the proportionate charge to the customer for the period of time during which such mistake, omission, interruptions, delays, errors, defects in transmission or service, omissions from or defects in the applicable list of customers or transfers to customers continues. However, any such mistakes, omissions, interruptions, delays, errors, or defects in transmission or service, omissions from or defects in the applicable list of customers or transfers to customers which are caused by or contributed to by the negligent omission or willful act of the customer provided facilities or equipment shall not result in the imposition of any liability whatsoever upon the Telephone Company.

The Telephone Company expressly disclaims any express or implied warranty for the aforesaid service or offering including no warranty of merchantability or warranty of fitness for any particular purpose. It is expressly acknowledged by all subscribers to the aforesaid service that errors, mistakes and omissions can and will occur and that the Telephone Company neither warrants nor guarantees faultless or perfect service or transmission. (N)

16. Operator Services ***(Cont'd)*** (T)

16.3 Liability of the Telephone Company (Cont'd)

(B) The customer indemnifies and saves ***the Company*** harmless against claims for libel, slander, or infringement of copyright and trademark arising from the information transmitted over facilities furnished hereunder and against all other claims arising out of any act or omission of the customer in connection with facilities provided by ***the Company.*** (T) (T)

(C) The customer indemnifies and saves ***the Company*** harmless against claims or suits for damages arising where the connection between the calling end user and a local emergency agency is in some way faulty or impaired, due in whole or in part to the negligent mistake or delay of ***the Company***. Examples of this may include, but are not limited to, instances in which ***the Company***, through negligent mistake or delay, may provide an incorrect local emergency agency number, delay in locating a local emergency agency number, or disconnect an in-progress call between a calling end user and a local emergency agency. (T) (T) (T)

16.4 Obligations of the Customer

In addition to the general regulations as set forth in Section 2 preceding, the following also applies.

(A) The customer shall provide the necessary on-hook, off-hook, answer supervision, and disconnect supervision at the customer's premises.

(B) Jurisdictional reporting will apply as required in Section ***2.3.14*** for determining the Percent Interstate Usage (PIU). (T)

16. Operator Services (N)

16.5 Rate Regulations

16.5.1 Description and Application of Rates and Charges

(A) Operator Transfer Service

The Operator Transfer charge is a flat-rated charge applicable per call transferred to the subscribing customer.

In addition to the Operator Transfer charge, Switched Access rates apply as set forth in Section 6.8 preceding and Carrier Common Line (CCL) charges as set forth in Sections 3.8 and 3.9 preceding apply for usage originating from all end offices served by the OSS Tandem.

Nonrecurring Switched Access charges are applicable as specified in Sections 6.7 and 6.8 preceding.

(B) Operator Inward Assistance Service

The Operator Inward Assistance flat-rated charges are specific to the operator function performed and are applied per attempt to the requesting customer. The charges include all operator work time and equipment necessary to perform the requested operator function. The specific charges for Inward Assistance are shown below:

(1) Busy Line Verification - applicable per busy line verify attempt.

(2) Verification with Call Interrupt - applicable per busy line verify/call interrupt attempt.

Switched Access rates, including CCL charges and nonrecurring charges, are not applicable for Operator Inward Assistance services. (N)

16. Operator Services (N)

16.5 Rate Regulations (Cont'd)

16.5.2 Rates and Charges

	Rate
Operator Transfer *	
- Per Call Transferred	$ 0.30
Operator Inward Assistance	
- Busy Line Verification	
- Per Attempt	1.50
- Verification with Call Interrupt	
- Per Attempt	2.75 (N)

* In addition, switched access charges are applicable as detailed in 16.5.1 preceding.

16. Operator Services (N)

This page is reserved for future use. (N)

17. Collocation Services

The Company will provide Collocation Services in conjunction with the Switched Access and Special Access Services provided in 6 and 7 preceding, in conjunction with the Frame Relay Services provided in 18 following and in conjunction with other Company provided interconnection services. Collocation Services are defined as Physical and Virtual Collocation for local interconnection.

17.1 Basic Service Description

(A) Physical Collocation

Physical Collocation provides an Interconnector* with ***enclosed*** space and associated requirements such as power and environmental conditioning within a Company premises** to locate certain fiber optic, microwave or other wireless facilities and equipment, and a connection to certain Company provided services. (C)

(B) Virtual Collocation

Virtual Collocation provides a connection between Interconnector provided and Company provided fiber optic, microwave or other wireless transport facilities at a manhole or other technically feasible interconnection point outside the Company premises to allow interconnection with certain Company provided services.

(C) Rate Categories

Collocation Services consist of the rate categories described generally below. Specific regulations governing the provision of these rate elements are set forth in 17.5 and 17.6 following for Physical and Virtual Collocation, respectively.

(1) Application Fee

The Application Fee is a nonrecurring charge that recovers the cost of processing the application for Collocation and provides for the preliminary work needed to determine if Company premises space and facilities are available to meet the Interconnector's collocation request. The Application Fee will be assessed once for each application submitted per Company premises, and is not dependent upon the amount of collocation space requested.

* For purposes of this Section, the term "Interconnector" is defined as any requesting Telecommunications Carrier per Section 251 of the Telecommunications Act of 1996 and is further explained in FCC Docket No. 96-98, Paragraph 611. Enhanced Service Providers are not covered by this offering as indicated in FCC Docket No. 96-98, Paragraph 581.

** For purposes of this Section, the term "Company premises" includes Company central office, serving wire centers and access tandems, as well as all buildings or similar structures owned or leased by the Company that house Company network facilities.

17. Collocation Services (Cont'd)

17.1 Basic Service Description (Cont'd)

(C) Rate Categories (Cont'd)

(2) Floor Space

The Floor Space rate element is assessed on a per square foot per month basis and provides for the use of Company premises equipment areas occupied by the Interconnector. Floor space includes associated environmental support systems such as AC power, lighting, heating and air conditioning.

(3) Roof Space

The Roof Space rate element is assessed on a per square foot per month basis and provides for the use of space on the exterior of the Company premises where the Interconnector has installed microwave or other wireless antenna facilities.

(4) Transmitter/Receiver Space

The Transmitter/Receiver Space rate element is assessed on a per square foot per month basis and provides for the Interconnector's use of Company premises equipment areas for the placement of microwave or other wireless transmitter/receiver equipment. Transmitter/receiver space includes associated environmental support systems such as AC power, lighting, heating and air conditioning.

(5) DC Power

The DC Power rate element consists of both a recurring monthly rate and a nonrecurring charge. The nonrecurring charge recovers the cost of delivering Company DC power to the Interconnector's collocation space and is assessed per foot of power lead provided to the security enclosure occupied by the Interconnector. A separate power lead is required for each seven (7) foot equipment bay located in the Interconnector's security enclosure. The recurring monthly rate recovers the cost of providing 48 volt DC power to the Interconnector's collocation space and is assessed per fuse amperage ordered.

17. Collocation Services (Cont'd)

17.1 Basic Service Description (Cont'd)

(C) Rate Categories (Cont'd)

(6) Security Enclosure

The Security Enclosure rate element is a nonrecurring charge assessed on a per enclosure basis and provides for the construction of lockable, eight (8) foot high, wire mesh security fence surrounding the perimeter of the Interconnector's collocation space. Security enclosures are available in one hundred (100) and two hundred (200) square foot sizes. ***Security enclosures or their equivalent are required for Physical Collocation arrangements.*** (N) | (N)

(7) Conduit Space - Per Foot

The Conduit Space - Per Foot rate element is assessed on a per linear foot per month basis and provides for the Interconnector's use of conduit duct space from the designated interconnection point to the Interconnector's collocation space.

(8) Conduit Space - Vault

The Conduit Space - Vault rate element is assessed on a per foot of a 9-conduit vault per month basis and provides for the Interconnector's use of the Company's cable vault and supporting structures.

(9) Electrical Cross-Connect

The Electrical Cross-Connect rate element is assessed on a per connection per month basis and recovers the cost of connecting the Interconnector's terminating equipment to other services provided by the Company. Electrical Cross-Connections are available at the DS0, DS1 and DS3 levels.

(10) Riser Space

The Riser Space rate element is assessed on a per foot per month basis and provides a cable path between the cable vault and the Interconnector's collocation space.

(11) Diverse Riser Space

The Diverse Riser Space rate element is assessed on a per foot per month basis and provides a second cable path between the cable vault and the Interconnector's collocation space.

17. Collocation Services (Cont'd)

17.1 Basic Service Description (Cont'd)

(C) Rate Categories (Cont'd)

(12) Internal Cabling

The Internal Cabling rate element is assessed on a per linear foot of 4-fiber cable per month basis and recovers the cost of cabling, both 4-fiber and coaxial as necessary, from the point of interconnection outside the Company premises (when that point of interconnection is a manhole near the Company premises) to the Interconnector's terminating equipment in the Company premises.

(13) Internal Conduit

The Internal Conduit rate element is assessed on a per linear foot per month basis and recovers the cost of 12-fiber conduit and riser from the point of interconnection outside the Company premises (when that point of interconnection is a manhole near the Company premises) to the Interconnector's terminating equipment in the Company premises.

(14) External Cabling and Conduit

The External Cabling and Conduit rate element is assessed on a per one-fourth (1/4) mile of 4-fiber cable per month basis and recovers the cost of 4-fiber cabling and conduit as necessary from the point of interconnection outside the Company premises (when that point of interconnection is not a manhole near the Company premises) to a manhole near the Company premises.

(15) Cable Pull and Splice

The Cable Pull and Splice rate element is assessed based on per half hour additional labor rates and recovers the cost of Company personnel pulling the Interconnector's fiber optic cable from the interconnection point in a manhole outside the Company premises to the cable vault, and splicing the Interconnector's cable to the riser cable in the cable vault.

(16) Installation and Maintenance

The Installation and Maintenance rate element is assessed based on per half hour additional labor rates and recovers the cost installing and/or maintaining Interconnector provided outside plant (e.g., entrance cable, riser cable and conduit).

17. Collocation Services (Cont'd)

17.1 Basic Service Description (Cont'd)

(C) Rate Categories (Cont'd)

(17) Security Escort

The Security Escort rate element is assessed based on per half hour additional labor rates and recovers the cost of Company personnel accompanying Interconnector's authorized employees, agents and contractors from the time of entry into a Company premises to the time of departure.

(18) Interconnection Rearrangement

The Interconnection Rearrangement rate element is a nonrecurring charge assessed when an existing Company provided High Capacity Service or Multiplexed High Capacity Service is reconfigured into a High Capacity Service under a Collocation arrangement or vice versa, or from one Collocation arrangement to another within the same Company premises.

(19) High Frequency Tie Cables

High Frequency Tie Cables provide a transmission path from an Interconnector's collocation space located within the facilities of the Company to the DSX1 Jack Panels of the Company. They can provide an intraoffice transmission path from the collocation space of one Interconnector to the collocation space of another Interconnector, utilizing the DSX1 Jack Panel as an interconnection point serving as the point of demarcation between the Interconnectors. High Frequency Tie Cables can also provide a transmission path for the interconnection of Carrier facilities to tariffed Access Services of the Company.

(20) Digital System Cross-Connection (DSX1) Jack Panel

A Digital System Cross-Connection (DSX1) Jack Panel is a trunk side connection and is the point where the facilities of the Interconnector are wired and permitted to interconnect with the facilities of the Company at the DS1 channel level. DSX1 Jack Panels also serve as the intraoffice termination point where the intraoffice facilities of one Interconnector are connected to the intraoffice facilities of another Interconnector utilizing High Frequency Tie Cables. The DSX1 Jack Panel serves as the demarcation point between the facilities of the Company and the Interconnector or between the facilities of different Interconnectors.

17. Collocation Services (Cont'd)

17.1 Basic Service Description (Cont'd)

(C) Rate Categories (Cont'd)

(21) Switchboard Cable Connection

The Switchboard Cable Connection is a line side connection from the horizontal side of the Company's central office mainframe to the Interconnector's collocation space for line side connection. The Switchboard Cable Connection includes a 100 ft./100 pair cable and a 100-pin connecting block.

(22) DSX3 Cross-Connection Shelf

The DSX3 Cross-Connection (DSX3) Shelf is a trunk side connection and, along with the DSX3 Cross-Connection Module, is the point where the facilities of the Interconnector are wired and permitted to interconnect with the facilities of the Company at the DS3 channel level. A DSX3 Cross-Connection Shelf and Modules also serve as the intraoffice termination point where the intraoffice facilities of one Interconnector are connected to the intraoffice facilities of another Interconnector utilizing High Frequency Coax DS3 Connecting Cables. The DSX3 Cross-Connection Shelf and Module serve as the demarcation point between the facilities of the Company and the Interconnector, or between the facilities of different Interconnectors. For each DSX3 Cross-Connection, a DSX3 Cross-Connection Shelf pair is required. A DSX3 Cross-Connection Shelf will support up to sixteen (16) DSX3 Cross-Connection Modules.

(23) DSX3 Cross-Connection Module

The DSX3 Cross-Connection (DSX3) Module is a trunk side connection and, along with the DSX3 Cross-Connection Shelf, is the point where the facilities of the Interconnector are wired and permitted to interconnect with the facilities of the Company at the DS3 channel level. DSX3 Cross-Connection Modules and the DSX3 Cross-Connection Shelf also serve as the intraoffice termination point where the intraoffice facilities of one Interconnector are connected to the intraoffice facilities of another Interconnector utilizing High Frequency Coax DS3 Connecting Cables. DSX3 Cross-Connection Modules and a DSX3 Cross-Connection Shelf also serve as the demarcation point between the facilities of the Company and the Interconnector, or between the facilities of different Interconnectors. For each DSX3 Cross-Connection, a DSX3 Cross-Connection Module pair is required. Each DSX3 Cross-Connection Shelf accepts up to sixteen (16) DSX3 Cross-Connection Modules.

17. Collocation Services (Cont'd)

17.1 Basic Service Description (Cont'd)

(C) Rate Categories (Cont'd)

(24) High Frequency Coax DS3 Connecting Cables

High Frequency Coax DS3 Connecting Cables provide a transmission path from an Interconnector's collocation space located within the facilities of the Company to the DSX3 Cross-Connection Shelf and Modules of the Company. They can provide an intraoffice transmission path from the collocation space of one Interconnector to the collocation space of another Interconnector, utilizing the DSX3 Shelf and Modules as an interconnection point serving as the point of demarcation between the Interconnectors. High Frequency Coax DS3 Connecting Cables can also provide a transmission path for the interconnection of Carrier facilities to tariffed Access Services of the Company.

(25) Optical Cross-Connection Panel

The Optical Cross-Connection Panel is a trunk side connection and is the point where the facilities of the Interconnector are wired and permitted to interconnect with the facilities of the Company at the OC3, OC12 or OC48 level. The Optical Cross-Connection Panel also serves as the intraoffice termination point where the intraoffice facilities of one Interconnector are connected to the intraoffice facilities of another Interconnector utilizing Fiber Optic Intraoffice Connecting Cables. The Optical Cross-Connection Panel also serves as the demarcation point between the facilities of the Company and the Interconnector, or between the facilities of different Interconnectors.

(26) Fiber Optic Intraoffice Connecting Cable

Fiber Optic Intraoffice Connecting Cables provide a transmission path from an Interconnector's collocation space located within the facilities of the Company to the Optical Cross-Connection Panels of the Company. They can provide an intraoffice transmission path from the collocation space of one Interconnector to the collocation space of another Interconnector, utilizing the Optical Cross-Connection Panel as an interconnection point serving as the point of demarcation between the Interconnectors. Fiber Optic Intraoffice Connecting Cables can also provide a transmission path for the interconnection of Carrier facilities to tariffed Access Services of the Company.

17. Collocation Services (Cont'd)

17.1 Basic Service Description (Cont'd)

(D)

(D)

17.2 Regulations

(A) The Company will provide an electrical interconnection to the Switched or Special Access Services specified in ***Sections*** 6 and 7 preceding, to the Frame Relay (C) Services specified in ***Section*** 18 following or in conjunction with other Company (C) provided interconnection services.

(B) Collocation to Switched Access Services is available only from Company central offices where suitable technical capability exists.

(C) The Company reserves the right, on thirty (30) days written notice by Certified U.S. Mail, to terminate the interconnection arrangement in the event the Interconnector violates the terms of this Tariff.

(D) The Company reserves the right, with thirty (30) days notification to the Interconnector, to modify technical, administrative or environmental procedures based on improvements suggested by Collocation use. In the event the Interconnector requests reconsideration of the proposed modifications, the Company will work cooperatively with the Interconnector to determine if alternative modifications could be implemented.

17. Collocation Services (Cont'd)

17.2 Regulations (Cont'd)

(E) Facilities and equipment provided by the Interconnector are subject to the terms, conditions and rates specified in this Tariff.

(F) An Interconnector that fails to pay any of the charges associated with the provision of Collocation is subject to Tariff provisions set forth in 2.1.8 preceding.

(G) The Credit Allowance for Service Interruptions as set forth in 2.4.4 preceding and the Service Performance Provisioning Guarantee as set forth in 2.4.9 preceding also apply to the Electrical Cross-Connect elements in Collocation.

(H) The provision of Collocation as set forth in this Tariff does not constitute a joint undertaking of the Company and the Interconnector for the furnishing of any service.

(I) When facilities are not available to meet an order for Collocation, the Company will construct additional facilities in accordance with the regulations, liabilities, rates and charges for Special Construction as set forth in 14. preceding.

(J) The provision of Collocation and its restoration following a service interruption shall comply with the provisions of the Telecommunications Service Priority (TSP) System set forth in 13.3.9 preceding. In order to meet the emergency requirements of the TSP System, the Company may rearrange Company conduit, manholes, cable entrances, riser systems or other Company facilities occupied by an Interconnector's transport facilities. The Company will make a reasonable effort to notify the Interconnector of the necessary rearrangements. If an emergency is caused by an act or omission of the Interconnector or by the Interconnector's equipment or facilities, the Interconnector will be charged for such rearrangement on a time and material basis.

(K) The Company reserves the right to stop any service when the Company deems such stoppage necessary by reason of accident or emergency, or for repairs, improvements or as otherwise provided. The Company will make every reasonable effort to ensure that interruption to the Interconnector's service is avoided. When service interruption is unavoidable, the Company will provide immediate notification of such stoppage. The Company does not warrant that any service will be free from interruptions caused by labor controversies, accidents, inability to obtain fuel, water or supplies, governmental regulations or other causes beyond the reasonable control of the Company.

17. Collocation Services (Cont'd)

17.2 Regulations (Cont'd)

(L) When an existing Company provided High Capacity Service or an existing Multiplexed High Capacity Service is reconfigured into a High Capacity Service under a Collocation arrangement or vice versa, or from one Company provided Collocation arrangement to another within the same Company premises, an Interconnection Rearrangement Charge as set forth in 17.7(A)(25) and (B)(10) following will apply for each service reconfigured.

(M) The Interconnector shall not assign or transfer its collocation space, either in whole or in part, or permit the use of any part of the premises by any other person or entity, without the written consent of the Company. Any purported assignment or transfer made without such consent may be deemed void by the Company at its option.

(N) When an Interconnector elects to convert an existing Virtual Collocation arrangement to a Physical Collocation arrangement, a charge equal to the difference between Virtual and Physical Collocation application fees will be assessed for each such conversion. The Interconnector shall also be responsible for any costs incurred by the Company during the conversion which exceed those normally incurred in the provision of Physical Collocation space for Collocation. ***An Interconnector converting to Physical Collocation will be required to locate their equipment within space secured by an enclosure.*** (N) | (N)

17.3 Liability

(A) The Company is not responsible for the compatibility of services provided under this Tariff when used in conjunction with Interconnector provided transport facilities, except to the extent that services and facilities provided by the Company shall comply with industry approved standards.

(B) The Company is not required to purchase additional land or buildings, relinquish building space forecasted for Company use or undertake the construction of new buildings or expansion of existing buildings in order to satisfy an Interconnector's request for Collocation. When undertaking the renovation of existing facilities, or the construction or lease of new facilities, the Company will take into account Interconnector collocation demand in the same manner in which demand for other services is considered.

17. Collocation Services (Cont'd)

17.3 Liability (Cont'd)

(C) The Company shall not be responsible for changes in technical criteria or facilities, operations or procedures of the Company which might render Interconnector provided facilities obsolete or require modification, alteration, or otherwise affect performance of such equipment or facilities, when such action is consistent with applicable laws, rules, regulations or industry standards. The Company will make every reasonable effort to ensure that such changes do not adversely affect Interconnector provided facilities. When changes affecting Interconnector provided facilities are unavoidable, the Company will provide reasonable notification of such modification.

(D) The Company is not liable for any act or omission of the Interconnector in the furnishing of services to the Interconnector's subscribers or affecting other users of the network or the public.

(E) The Company is not liable for any omission or error in the application or other documents provided by the Interconnector relative to a request for Collocation, and has no responsibility to verify the accuracy of such information.

(F) The Interconnector shall indemnify, defend and hold the Company harmless against any claim of libel, slander or infringement of patents or copyrights arising from the improper use of equipment or information transmitted over its facilities.

(G) The Interconnector shall indemnify, defend and hold the Company harmless against any and all liability including, but not limited to, damage to property, or death or injury to any person(s), directly or indirectly arising out of or caused, in whole or in part, by the Interconnector's acts or omissions or the acts or omissions of any party or individual acting on the Interconnector's behalf.

(H) The Interconnector shall provide the Company with evidence of sufficient insurance to protect the Company against any claims for damages as described in (D) through (G) preceding.

(I) The provisions set forth in this Section apply in addition to any limits, liability or indemnification set forth in other Sections of this Tariff.

17. Collocation Services (Cont'd)

17.4 Network Compatibility and Standards

(A) The operating characteristics of customer transport facilities shall not interfere with any Company services and are subject to the provisions that said facilities do not:

(1) Endanger the safety of Company employees, other Collocation customers or the public;

(2) Damage or require change or alteration of Company equipment or facilities;

(3) Interfere with the proper functioning of Company equipment or facilities; or

(4) Impair the operation of the Company network or otherwise injure any party in its use of Company services.

The Telephone Company reserves the right, with or without notice, to disconnect any Interconnector's transport facilities which are in violation of the provisions in this Section.

(B) The Interconnector is responsible for ensuring continued technical compatibility with the Company network. When changes in standards occur or differences exist between technical references, the Interconnector shall follow the more stringent standard.

17.5 Physical Collocation

(A) The Interconnector shall provide to the Company a written application for the provision of Physical Collocation of fiber optic, microwave or other wireless facilities. The application shall include complete details of the collocation and interconnection requested, including, but not limited to, specific roof space, floor space, power and environmental conditioning requirements. Completed applications must be accompanied by the Application Fee set forth in 17.7(A)(1) following, and will be processed by the Company within thirty (30) days on a first-come, first-served basis. The Interconnector must begin use of the collocated space within six (6) months of the date of the application or other time period mutually agreed to by the Interconnector and the Company, or the space must be relinquished to the Company. The Company may extend the beginning of use beyond the six (6) month period upon a demonstration by the Interconnector that circumstances beyond the Interconnector's control prevented the six (6) month deadline from being met.

17. Collocation Services (Cont'd

17.5 Physical Collocation (Cont'd)

(B) If collocation space is unavailable or an Interconnector withdraws its request, the Application Fee, less the costs incurred by the Company (e.g., engineering record search and administrative activities required to process the application), will be refunded.

(C) In situations where collocation space and associated requirements are available, Physical Collocation will be provided by the Company within ninety (90) days, subject to additional time for asbestos removal or extraordinary construction, as specified below:

(1) The Company shall permit the Interconnector to initially occupy one hundred (100) square foot increments within the Company premises, up to a maximum of two hundred (200) square feet. If mutually agreed to by the Company and the Interconnector, increments of space less than one hundred (100) square feet will be permitted. For customers requesting collocation space beyond the two hundred (200) square foot maximum, the Company will make every effort to provide additional available space dependent upon other outstanding requests for space. Additional collocation space cannot be reserved by the Interconnector for future use. Collocation Floor Space will be charged for on a per square foot basis as set forth in 17.7(A)(2) following, and includes primary AC power, backup AC power where available, lighting, heating, air conditioning and other environmental support which the Company will provide in the same manner that it provides such support items for its own equipment in the Company premises.

(2) For interconnection of microwave or other wireless facilities, the Company will permit the Interconnector to install antenna facilities on the exterior of the Company premises (Roof Space) and make available a path for the Interconnector's waveguide and/or coaxial cable (Riser Space - Per Foot). If an asbestos containing area is opened to facilitate the installation of the Interconnector's facilities, the Interconnector shall pay on a time and material basis for correction of any asbestos related situations. Roof Space will be charged for on a per square foot basis as set forth in 17.7(A)(3) following; the rates for Riser Space - Per Foot are specified in 17.7(A)(13) following.

17. Collocation Services (Cont'd)

17.5 Physical Collocation (Cont'd)

(C) (Cont'd)

(3) The Company will designate the location in the Company premises where the Interconnector's transmitter/receiver equipment shall be placed. Transmitter/Receiver Space will be charged for on a per square foot basis as set forth in 17.7(A)(4) following and includes primary and backup AC power, lighting, heating, air conditioning and other environmental support which the Company will provide in the same manner such support items are provided for its own equipment in the Company premises. In situations where special work must be completed by the Company to provide emergency power or environmental support to the Interconnector's transmitter/receiver equipment or antenna, the charges will be calculated and billed to the Interconnector on a time and material basis.

(4) Electricity shall be provided by the Company in sufficient amount to provide ordinary lighting, heating and air conditioning of the collocation space. In addition, the Company shall provide one 15 amperage, 100 volt AC power circuit for the Interconnector's use. In situations where the Interconnector requires higher amperage AC power, the Company will work cooperatively with the Interconnector to ensure that specific power requirements are met. Should the Interconnector require additional electric capacity, such capacity will be supplied by the Company. The Interconnector will pay the Company an additional fee in an amount to be agreed upon by both the Company and the Interconnector at the time of the request.

(5) The Company reserves the right to monitor the Interconnector's use of electricity to determine if the electricity provided is sufficient to support the Interconnector's collocation space. If the Company determines that the electricity provided to the Interconnector is insufficient to support the Interconnector's collocation space, the Company may require the installation of additional electrical circuits to provide the Interconnector with additional electricity. The Interconnector shall reimburse the Company for any expenses incurred in making such additional electrical circuits available to the Interconnector.

(6) The Company shall furnish air conditioning and/or other environmental controls for the Interconnector's space in a manner consistent with those provided elsewhere in the building and that responds to the information provided in the Interconnector's application.

17. Collocation Services (Cont'd)

17.5 Physical Collocation (Cont'd)

(C) (Cont'd)

(7) The Company will provide supplementary air conditioning units or other environmental control devices made necessary solely by the Interconnector's equipment or facilities, and the cost thereof shall be paid by the Interconnector to the Company.

(8) If the Company determines that it is necessary to upgrade the air conditioning and/or other environmental control devices for the building in general, and such upgrade is made necessary by the presence of the Interconnector in the building generally, the cost of such air conditioning units or other environmental control devices shall be allocated between the Company and the Interconnectors which benefit from the upgrades. Such allocation will be based on a ratio of the number of square feet occupied by each Interconnector to the total square feet of the Company premises space being upgraded.

(9) With the exception of day-to-day equipment additions or modifications with existing frames, the Interconnector shall not make installations, alterations or additions in or to the collocation space without submitting plans or specifications to the Company and securing the prior written consent of the Company in each instance. Consent shall not be unreasonably withheld or unduly delayed for non-structural interior alterations to the collocation space that do not adversely affect the building's appearance, value, structural strength and mechanical integrity. Such work will be done at the sole expense of the Interconnector.

(10) The Interconnector shall not interconnect equipment or facilities in its collocation space with equipment or facilities within another Interconnector's collocation space by any means other than through Company provided services or facilities. The Interconnector shall not provide or make available to any third party any portion of space or location within its collocation space.

17. Collocation Services (Cont'd)

17.5 Physical Collocation (Cont'd)

(C) (Cont'd)

(11) Collocation is provided for the sole purpose of connecting an Interconnector's transport facilities to other Access or interconnection services offered by the Company, including unbundled local exchange network elements offered to Interconnectors certified as Competitive Local Exchange Service Providers. Connection many only be made with the provision of Collocation and only through the technically feasible interconnection point. The Company will provide at least two (2) separate points of interconnection to the central office where there are two (2) entry points for the Company's cable facilities, except for situations where one (1) entry of a two (2) entry office is filled to capacity. In situations where two (2) entry points are not immediately available, the Company shall perform the work necessary to make separate points of entry available to the Interconnector at the same time it makes such points of entry available for itself. Normal Conduit Space Charges as set forth in 17.7(A)(8) and (9) following will apply per entry point.

(12) The Company will also provide primary and backup DC Power, at the rates set forth in 17.7(A)(5) following, to the Interconnector's equipment in the same manner that it provides such power to its own equipment within the Company premises.

(13) The Company shall arrange for the construction of, or allow a mutually agreed upon contractor selected by the Interconnector to construct a secure enclosure around the collocated floor space. The enclosure shall consist of a lockable, eight (8) foot high, wire mesh security fence surrounding the perimeter of the Interconnector's collocation space and shall conform to the standards for health, safety and security to which the Company presently adheres within a Company premises. The rates for Secure Enclosures constructed by the Company are set forth in 17.7(A)(6) and (7) following. In situations where the Company must install environmental support to prepare the space for collocation, the charges will also be calculated and billed to the (N)
Interconnector on a time and material basis. ***A secure enclosure is required*** (N)
for Physical Collocation arrangements.

(14) Except where the Interconnector purchases unbundled local exchange network transmission elements from the Company, the Interconnector shall bring its fiber optic cable to a manhole or other technically feasible interconnection point and provide sufficient cable length, as mutually determined by the Company and the Interconnector, to extend the cable into the Company premises cable entrance(s)

17. Collocation Services (Cont'd)

17.5 Physical Collocation (Cont'd)

(C) (Cont'd)

(15) Except where the Interconnector purchases unbundled local exchange network transmission elements from the Company, the Interconnector shall provide fire retardant fiber optic riser cable of sufficient length, as jointly determined by the Company and the Interconnector, to extend from the cable entrance(s) to the designated collocation space.

(16) The Interconnector shall extend the fiber optic cable from the manhole, or other designated interconnection point, into the Company premises cable vault and splice the cable to the Interconnector provided fire retardant riser cable. The Interconnector shall provide a secure dedicated fire retardant splice enclosure and shall tag all facilities to indicate ownership. The Company shall extend the riser cable through the Company premises and deliver it to the Interconnector's collocation space. The Company shall be responsible for providing conduit space (Conduit Space - Per Foot) and cable vault space with support structures (Conduit Space - Vault) at the rates set forth in 17.7(A)(8) and (9) following.

(17) The Interconnector shall bring its microwave or other wireless facilities to an interconnection point designated by the Company and extend the cable into the Company premises to the designated collocation space. The Interconnector shall tag all facilities to indicate ownership. The Company shall be responsible for providing conduit space (Riser Space - Per Foot) at the rates set forth in 17.7(A)(13) following.

(18) The Company shall designate a point of connection (Cross-Connect) where its network connects with the Interconnector's transport facilities in the collocation space. The point of connection defines the physical demarcation between the Interconnector's transport facilities and the Company's network. The Company will provide a Cross-Connect at the rates specified in 17.7(A)(10) through (12) following. The Interconnector is responsible for optical to electrical or speed conversions, multiplexing or any other change required to connect the Interconnector's transport facilities to Company equipment and facilities at compatible interfaces, levels or speeds.

17. Collocation Services (Cont'd)

17.5 Physical Collocation (Cont'd)

(C) (Cont'd)

(19) When the Interconnector orders a DS3, DS1 or Optical Cross-Connect for use with Switched Access Services, the Interconnector must also order appropriate Multiplexing. DS3 to DS1 Multiplexing provides an arrangement that Multiplexes a single DS3 Digital circuit at a rate of 44.736 Mbps to twenty-eight (28) DS1 Digital circuits. DS1 to DS0 Multiplexing provides an arrangement that Multiplexes a single DS1 Digital circuit at a rate of 1.544 Mbps to twenty-four (24) DS0 Digital circuits. The rates for DS3 to DS1 and DS1 to DS0 Multiplexing are set forth in 6.8.2(D) preceding.

(20) The Company will permit the Interconnector to locate certain transmission equipment within the Interconnector's collocated space in the Company premises including, but not limited to:

- Optical Line Terminating Multiplexers
- Central Office Multiplexers
- Digital Cross-Connect Panels
- Optical Cross-Connect Panels
- Digital Loop Carrier

Transmission equipment not specifically identified above may be located within the Interconnector's collocated space upon written approval from the Company. In the event of a dispute regarding the placement of an Interconnector's transmission equipment within the Interconnector's collocation space, the Company shall prove to the state commission that such equipment is not necessary. Except for equipment that meets the standards that the Company applies to its own equipment and that is used for interconnecting to unbundled local exchange network elements, switching equipment may not be located within the Interconnector's collocated space. Should the Interconnector require the placement of integrated equipment (i.e., transmission and switching functionality), the Company will allow such placement upon certification by the Interconnector that, except for the purpose of providing multiplexing and/or signal aggregation functionality between the Company's network or unbundled network elements and the Interconnector's transmission facilities, the switching functionality will not be used and the device will be used only to terminate or aggregate basic transmission facilities.

17. Collocation Services (Cont'd)

17.5 Physical Collocation (Cont'd)

(D) The Company shall permit the Interconnector's authorized employees, agents and contractors to have access to the Interconnector's cable, associated equipment and collocation space at all reasonable times, provided that the Interconnector's employees, agents and contractors comply with Company policies and practices pertaining to work stoppages, fire, safety and security. The Interconnector's authorized employees, agents and contractors must be accompanied by a Security Escort from the time of entry to a Company premises to the time of departure, including time spent in common areas such as s restrooms. When such security is provided by authorized Company personnel, the Interconnector will be charged in accordance with the Additional Labor provisions set forth in 13.2 preceding. When a third party security agent is employed, the associated charges will be billed to the Interconnector on a pass through basis. With the exception of emergency situations, the Interconnector must provide at least twenty-four (24) hours notice of its intent to enter the Company premises.

(E) The Company reserves the right to inspect the Interconnector's complete installation of equipment and facilities, and to make subsequent and periodic inspections of the Interconnector's equipment and facilities occupying collocation space and associated entrance conduit and riser space. If the Interconnector is found to be in noncompliance with the terms and conditions set forth in this Section, the Interconnector will be required to modify its installations to ensure compliance. The Company will notify the Interconnector in advance of such inspections, and the Interconnector shall have the right to be present at the time of inspection.

(F) The Interconnector will provide the Company with access to the collocation space at all times to allow the Company to react to emergencies, provide services and inspect for compliance with fire, safety and health regulations or standards.

(G) For all Interconnector work performed or installed in Company conduit systems, Company premises outside the collocation space or other Company locations used by other parties, the Company reserves the right to:

(1) Require, at the Company's sole discretion, a Security Escort chargeable to the Interconnector. The Additional Labor Charges set forth in 13.2 preceding will apply for Security Escort Services provided by the Company.

(2) Prohibit the placement of any and all equipment or facilities other than cable in Company owned or controlled areas.

17. Collocation Services (Cont'd)

17.5 Physical Collocation (Cont'd)

(G) (Cont'd)

(3) Designate the location of cable splices.

(4) Approve all installations.

(5) Require that the Interconnector, at its sole expense, obtain any necessary right-of-way or other permits.

(H) The Interconnector is subject to recurring and/or nonrecurring rates and charges for the use of Company owned or controlled space and facilities, and for installation work functions provided by the Company. The rates and charges associated with Physical Collocation are set forth in 17.7(A) following. Nonrecurring charges for Additional Engineering and Labor incurred by the Company will be calculated on a time and material basis as specified in 13. preceding.

(I) At the Company's option, the Company may provide facilities or equipment including, but not limited to, conduit, riser supports and termination frames, in such a fashion that the facilities or equipment is shared or used in common with other parties. Requests by an Interconnector for dedicated or special arrangements may result in additional charges.

(J) If mutually agreed to by the Company and the Interconnector, the Company will perform Interconnector installation and/or maintenance work functions for an additional fee. The Company will be responsible for all maintenance and related activities on the Company side of the space. Company provided mechanical or fusion splices and other installation functions will be performed using methods consistent with Company practices. The charges for installation work functions performed by the Company on behalf of the Interconnector will be calculated on a time and material basis as specified in 13. preceding.

(K) In the event the Company determines that it is necessary for the Interconnector to move its collocated space within a Company premises or to another Company premises, the Interconnector is required to comply. The Company is responsible for the costs associated with the removal, transport and reinstallation of the Interconnector's equipment within the Company premises.

17. Collocation Services (Cont'd)

17.5 Physical Collocation (Cont'd)

(L) Should the Interconnector request that its collocated space be moved within the Company premises or to another Company premises, the Company will permit the Interconnector to relocate its collocated space, subject to the availability of space and associated requirements. The Interconnector is solely responsible for the costs associated with the preparation of new collocated space at the new location and for the removal, transport and reinstallation of its equipment.

(M) The Company and the Interconnector are each responsible for notifying the other of significant outages which could impact or degrade either party's network and services, and provide estimated clearing time for restoral. The Company and the Interconnector are responsible for testing, cooperatively if necessary, to identify and clear a trouble when the trouble has been sectionalized to the portion of the service each provides.

(N) If trouble detected by or reported to the Company results in the Company dispatching its employees to the Interconnector's collocation space and the trouble is not caused by Company equipment or facilities, the Interconnector will be so notified and will be liable for the Maintenance of Service Charge as specified in 13.3.1 preceding.

(O) The Interconnector and Company are each responsible for providing to the other a contact list of technical personnel accessible twenty-four (24) hours a day, seven (7) days a week.

(P) In the event that the Interconnector's use of its microwave or other wireless systems cause broadcast interference, the Company, at its sole discretion, shall have the right to cause the Interconnector to cease the operation of its system until such broadcast interference can be corrected. The Company shall incur no liability to the Interconnector or any other person as a result of ordering the Interconnector to cease using its system in accordance with the foregoing.

(Q) Upon disconnection of service, the Interconnector shall, at its expense, disconnect and remove all Interconnector facilities and equipment from the collocation space and from all other Company owned or controlled areas in the Company premises in which the Company has allowed the Interconnector to place facilities and equipment.

17. Collocation Services (Cont'd)

17.6 Virtual Collocation

(A) The Interconnector shall provide to the Company a written application for the provision of Virtual Collocation. Completed applications must be accompanied by the Application Fee set forth in 17.7(B)(1) following and will be processed by the Company within thirty (30) days on a first-come, first-served basis. The Application Fee will be applied on a per end office basis.

(B) In situations where collocation space and associated requirements are available, Virtual Collocation will be provided by the Company within ninety (90) days subject to additional time for extraordinary construction. If collocation space is unavailable or if an Interconnector withdraws its request, the Application Fee, less the costs incurred by the Company (e.g., administrative activities required to process the application), will be refunded.

(C) Virtual Collocation will be provided as specified below:

(1) The Interconnector shall bring its fiber optic cable to a manhole or other Company designated interconnection point. This interconnection point will define the physical demarcation between the Interconnector's transport facilities and the Company's network.

(2) The Interconnector must obtain the electronic and peripheral equipment necessary for terminating its network in the Company's premises. The Company will lease such equipment from the Interconnector for $1.00 in each premises where the Interconnector subscribes to Virtual Collocation. Upon termination of the lease, the Interconnector is responsible for the cost of removing the equipment from the Company's premises.

(3) The Company has exclusive control of and responsibility for installation and maintenance of all terminating equipment dedicated to the Interconnector and located in the Company's premises.

(4) The Interconnector must pay to train a minimum of three (3) Company personnel to install and maintain terminating equipment dedicated to the Interconnector which is not a type normally used in the Company's network, as well as provide sufficient spare parts to allow timely repairs. Installation and/or maintenance performed on equipment dedicated to an Interconnector under a Virtual Collocation arrangement will be charged to the Interconnector on a time and material basis. The associated Labor Charges are set forth in 13. preceding.

17. Collocation Services (Cont'd)

17.6 Virtual Collocation (Cont'd)

(C) (Cont'd)

(5) If the Company's labor contracts permit the use of third party contractors for the installation and/or maintenance of equipment of the type dedicated to the Interconnector, the Interconnector will be allowed the opportunity to contract with the Company to perform such installation and/or maintenance.

(6) When the Interconnector has contracted with the Company to perform installation and/or maintenance of equipment dedicated to the Interconnector, the Company may, at its sole discretion, require that a Security Escort be present while the Interconnector is in the Company premises. Security Escort Services will be charged for on a per half hour basis as set forth in 17.7(B)(9) following.

(7) The Company will restrict the amount of installed dedicated equipment based on the level of the current operational requirements of the Interconnector.

(8) The Company will designate a point of connection (Cross-Connect), which will be at any technically feasible point, where its network connects with the virtually collocated terminating equipment. The Company will provide an Electrical Cross-Connect at the rates specified in 17.7(B)(2) through (4) following.

(9) When the Interconnector orders a DS3 Electrical Cross-Connect for use with Switched Access Services, the Interconnector must also order DS3 to DS1 Multiplexing. DS3 to DS1 Multiplexing provides an arrangement that Multiplexes a single DS3 Digital circuit at a rate of 44.736 Mbps to twenty-eight (28) DS1 Digital circuits. The rates for DS3 to DS1 Multiplexing are specified in 6.8.2(D) preceding.

(10) Equipment dedicated to an Interconnector shall not interconnect with equipment dedicated to another Interconnector by any means other than through Company provided services or facilities.

17. Collocation Services (Cont'd)

17.6 Virtual Collocation (Cont'd)

(C) (Cont'd)

(11) Collocation is provided for the sole purpose of connecting an Interconnector's transport facilities to Access or interconnection services of the Company, including unbundled local exchange network elements. Connection may only be made with the provision of Collocation which will be at any technically feasible point. The Company will provide two (2) separate points of entry to the Company's premises for service to Interconnectors, where there are two (2) entry points for the Company's cable facilities, except where one (1) entry of a two (2) entry office is filled to capacity.

(12) If trouble detected by, or reported to, the Company is caused by equipment leased from the Interconnector, the Interconnector will be so notified and will be liable for the Maintenance of Service Charge as specified in 13.3.1 preceding, in addition to any other applicable charges as set forth in this Tariff.

(D) The Company and the Interconnector are each responsible for notifying the other of significant outages which could impact or degrade either party's network and services, and provide estimated clearing time for restoral. The Company and the Interconnector are responsible for testing, cooperatively if necessary, to identify and clear a trouble when the trouble has been sectionalized to the portion of the service each provides.

17. Collocation Services (Cont'd)

17.7 Rates and Charges

(A) Physical Collocation

		Monthly Rate	Nonrecurring Charge
(1)	Application Fee		
	- Per Application Per Company Premises	----	$2,761.58
(2)	Floor Space		
	- Per Square Foot	$ 2.65	------
(3)	Roof Space		
	- Per Square Foot	2.65	------
(4)	Transmitter/Receiver Space		
	- Per Square Foot	2.65	------
(5)	DC Power		
	- Per Fuse Amp	11.48	------
	- Per Power Lead Per Foot	----	28.36
(6)	Security Enclosure		
	- Per 100 Square Foot Enclosure	----	10,319.06
(7)	Security Enclosure		
	- Per 200 Square Foot Enclosure (D)	----	14,447.23

17. Collocation Services (Cont'd)

17.7 Rates and Charges (Cont'd)

(A) Physical Collocation (Cont'd)

			Monthly Rate	
		(D)		
(8)	Conduit Space - Per Foot			
	- Per Linear Foot		$ 0.37	
(9)	Conduit Space - Vault			
	- Per Foot of 9-Conduit Vault		1.17	
(10)	DS0 Electrical Cross-Connect			
	- Per Connection		0.73	(D) (D)
(11)	DS1 Electrical Cross-Connect			
	- Per Connection		2.40	(D) (D)
(12)	DS3 Electrical Cross-Connect			
	- Per Connection		21.42	(D) (D)
(13)	Riser Space			
	- Per Foot	(D)	4.57	

17. Collocation Services (Cont'd)

17.7 Rates and Charges (Cont'd)

(A) Physical Collocation (Cont'd)

		Monthly Rate	
(14)	Diverse Riser Space		
	- Per Foot	$ 4.57	
(15)	Switchboard Cable		
	- 100 Pair/100 Ft./Connecting Block	34.87	
(16)	DSX1 Jack Panel Pair	85.66	
(17)	High Frequency Cable		
	- Per Foot Per DS1	0.32	
(18)	DSX3 Cross-Connect Shelf Pair	25.17	
(19)	DSX3 Cross-Connect Module Pair		
	- Per DS3	42.09	
(20)	DS3 High Frequency Coax		
	- Per Foot Per DS3	0.89	
(21)	Fiber Optic Intraoffice Connecting Cable		
	- Per Foot/Four-Fiber Per Two Panel Array	0.06	
(22)	Optical Cross-Connection Panel		
	- Per Pair	113.45	
(23)	***Reserved For Future Use***		(C)
			(D)
(24)	***Reserved For Future Use***		(C)
			(D)

17. Collocation Services (Cont'd)

17.7 Rates and Charges (Cont'd)

(A) Physical Collocation (Cont'd)

		Nonrecurring Charge
	(D)	
(25) Interconnection Rearrangement		
- Per Service Reconfigured		$91.00
(26) Cable Pull and Splice		
- Per Half Hour		See Section 13.2, Additional Labor Rates
(27) Installation and/or Maintenance		
- Per Half Hour		See Section 13.2, Additional Labor Rates
(28) Security Escort		
- Per Half Hour	(D)	See Section 13.2, Additional Labor Rates

17. Collocation Services (Cont'd)

17.7 Rates and Charges (Cont'd)

(B) Virtual Collocation

		Monthly Rate	Nonrecurring Charge	
	(D)			
(1) Application Fee				
- Per Application Per Company Premises		----	$2,564.40	
(2) DS1 Electrical Cross-Connect				
- Per Connection		$ 2.40	------	(D) (D)
(3) DS3 Electrical Cross-Connect				
- Per Connection		21.42	------	(D) (D)
(4) DS0 Electrical Cross-Connect				
- Per Connection		0.73	------	(D) (D)
(5) Internal Cabling				
- Per Linear Foot		0.16	------	
(6) Internal Conduit	(D)	0.37	------	

17. Collocation Services (Cont'd)

17.7 Rates and Charges (Cont'd)

(B) Virtual Collocation (Cont'd)

		Monthly Rate	Nonrecurring Charge
(7)	External Cabling and Conduit		
	- Per 1/4 Mile	$181.80	------
(8)	Installation and/or Maintenance		
	- Per Half Hour	----	See Section 13.2, Additional Labor Rates
(9)	Security Escort		
	- Per Half Hour	----	See Section 13.2, Additional Labor Rates
(10)	Interconnection Rearrangement		
	- Per Service Reconfigured	----	$91.00
(11)	DC Power		
	- Per Power Lead Per Foot	----	28.36
(12)	Switchboard Cable		
	- 100 Pair/100 Ft./ Connecting Block (D)	71.71	------

17. Collocation Services (Cont'd)

17.7 Rates and Charges (Cont'd)

(B) Virtual Collocation (Cont'd)

		Monthly Rate
(13)	DSX1 Jack Panel Pair	$ 85.66
(14)	High Frequency Cable	
	- Per Foot Per DS1	0.32
(15)	DSX3 Cross-Connect Shelf Pair	25.17
(16)	DSX3 Cross-Connect Module Pair	
	- Per DS3	42.09
(17)	DS3 High Frequency Coax	
	- Per Foot Per DS3	0.89
(18)	Fiber Optic Intraoffice Connecting Cable	
	- Per Foot/Four-Fiber Per Two Panel Array	0.06
(19)	Optical Cross-Connection Panel	
	- Per Pair	113.45

(D)

(D)

18. Specialized Network Services

18.1 General

Specialized Network Services provide general service arrangements which are not offered under other Sections of this Tariff.

18.2 Frame Relay Service

18.2.1 Description

Frame Relay Service (FRS) is a fast packet network that provides the customer high speed access and throughput to different customer addresses. Utilizing statistical multiplexing, the Frame Relay Network enables the customer to allocate circuit bandwidth to applications as needed, rather than assigning fixed channels to specific applications.

Permanent Virtual Connections (PVCs) are logical channels that connect ports on a Frame Relay switch between Frame Relay switches. PVCs are end-to-end, bi-directional channels that are established and disestablished via the service order process. A separate PVC must be established to each location that the customer desires to transmit data. These PVC channels are virtual because they are established in software tables and do not tie up facilities when not in use. Multiple PVCs can be defined over a single Frame Relay Access Channel Termination, thereby providing a single access line the capability to transmit data to multiple destinations.

Physical access to the Company's Frame Relay Network is provided via a Frame Relay Access Channel Termination.

The Company will provision FRS to support industry standards for the User to Network Interface (UNI) and the Network to Network Interface (NNI).

FRS is offered where facilities exist. If it is necessary to construct facilities to satisfy service requests, the service may be provided pursuant to the Company's Special Construction provisions as set forth in 14 preceding.

18. Specialized Network Services (Cont'd)

18.2 Frame Relay Service (Cont'd)

18.2.2 Service Components

(A) Access to the Frame Relay Network

Frame Relay Access Channel Terminations are used to provide transport from the customer premises to the FRS UNI or NNI Port Connection. Frame Relay Access Channel Terminations are available at speeds of 56.0/64.0 kbps through 1.544 Mbps for the UNI Port Connection and at 1.544 Mbps for the NNI Port Connection. The Frame Relay Access Channel Termination is provided for use only with Frame Relay Service.

(B) User to Network Interface (UNI) Port Connection

The User to Network Interface (UNI) Port Connection is a standard interface used to connect the end user to the Company's Frame Relay Network. It receives the data frame from the customer's network or CPE devices and verifies that the customer address destination is valid before relaying the frame.

The UNI Port Connection is available at 56.0/64.0 kbps through 1.544 Mbps. The transmission speed of the UNI Port Connection may not exceed the transmission speed of the Frame Relay Access Channel Termination. One (1) Frame Relay Access Channel Termination is required per UNI Port Connection.

(C) Network to Network Interface (NNI) Port Connection

The Network to Network Interface (NNI) Port Connection, ***provides bi-directional polling between the Telephone Company's FRS switch and the interexchange carrier's or other customer's frame relay network.*** (C) | (C)

The NNI Port Connection is available at 1.544 Mbps. The NNI Port Connection must be provided at the same transmission speed as the Frame Relay Access Channel Termination. One (1) Frame Relay Access Channel Termination is required per NNI Port Connection.

18. Specialized Network Services (Cont'd)

18.2 Frame Relay Service (Cont'd)

18.2.2 Service Components (Cont'd)

(D) Permanent Virtual Circuits (PVCs)

The PVC provides a software defined electronic path between two (2) Port Connections within the Frame Relay Network. An UNI or NNI Port Connection can be associated with any number of PVCs. Since all PVCs need not be in use at the same time, it is possible for the total bandwidth of all PVCs associated with one (1) Port Connection to exceed the bandwidth of the Port Connection. It is not possible, however, for the simultaneous aggregate of the PVCs throughput to exceed the bandwidth of the Port Connection. Such a relationship is referred to as over-subscription or overbooking, and when this occurs, there can be no guarantee that the bandwidth defined for that PVC will be available at any point in time.

(E) Committed Information Rate (CIR)

CIR defines the amount of data throughput on a designated PVC that the Company will support under normal operating conditions. Any data burst beyond the CIR may be labeled Discard Eligible (DE) if the data transfer rate exceeds the CIR of the PVC being used. If the Frame Relay Network develops congestion, the frames marked DE may be discarded.

18.2.3 Rate Regulations

The minimum service period for Frame Relay Service is one (1) month.

When the customer orders additional PVCs with a designated CIR, the CIR Nonrecurring Charge shall apply.

When a change is made to a customer's Frame Relay configuration at the customer's request, the Administrative Nonrecurring Charge shall apply. Such changes are defined as those rearrangements necessary to add, delete or rearrange the customer's configuration, including changes to CIRs. Although multiple changes may be caused by such actions, only one (1) Administrative Charge will apply.

When the customer changes the CIR on an existing PVC, the CIR Nonrecurring Charge will apply in addition to the Administrative Nonrecurring Charge.

18. Specialized Network Services (Cont'd)

18.2 Frame Relay Service (Cont'd)

18.2.4 FRS Term Discount Plans

(A) General

Frame Relay Service Term Discount Plans (FRSTDPs) are available for Frame Relay Access Channel Terminations and UNI Port Connections at the speeds of 56.0/64.0 kbps through 1.544 Mbps and for 1.544 Mbps NNI Port Connections. A FRSTDP provides the customer with discounted rates for the services listed. The customer agrees to a minimum service commitment per ***service when*** the TDP is established. (C)

Frame Relay Access Channel Terminations and the UNI and NNI Port Connections for a given circuit must be ordered for the same commitment period with the same service date for the same customer. A customer establishes a FRSTDP by selecting all or a portion of their in-service Frame Relay Access Channel Terminations and committing 90 percent of those Frame Relay Access Channel Terminations to a term of either three years or five years. Customers may disconnect or move Frame Relay Access Channel ***Terminations and*** not be subject to Termination Liability Charges as long as the commitment levels are maintained. (C)

As long as a customer's actual in-service level of Frame Relay Access Channel Terminations is at the commitment level, the customer will be billed the FRSTDP rate for all eligible rate elements. Additionally, if a customer's in-service level exceeds the initial in-service level by no more than 30 percent, the customer will be billed the FRSTDP rates for all eligible rate elements. For example, the customer has one hundred (100) Frame Relay Access Channel Terminations and commits to 90 percent for a three-year term. The customer will be billed FRSTDP rates as long as the service level of the Frame Relay Access Channel Terminations is equal to ninety (90), but not more than one hundred and thirty (130).

18. Specialized Network Services (Cont'd)

18.2 Frame Relay Service (Cont'd)

18.2.4 FRS Term Discount Plans (Cont'd)

(A) General (Cont'd)

If the customer's in-service request exceeds the initial service level by more than 30 percent, the customer will be billed the month-to-month rate for all facilities above the upper limit of the commitment level. If the customer's in-service level request falls below the commitment level, the customer will be billed for the commitment level of the Frame Relay Access Channel Terminations at the FRSTDP rate. For example, a customer that commits ninety (90) Frame Relay Access Channel Terminations, but only has seventy (70) in-service, will be billed the FRSTDP rates for ninety (90) Frame Relay Access Channel Terminations and all associated rate elements. The TDP rates billed will be based on the most recently disconnected facilities.

(B) Ordering Provisions

The customer must order a FRSTDP in writing to the Company. An FRSTDP may be ordered based on the following plan options.

(D)
(D)
Three Year Plan (T)
Five Year Plan (T)

Customers who subscribed to an FRSTDP with a commitment period of other ***than three*** years (thirty-six months) or five years (sixty months) prior to November 3, 1999 will have until May 3, 2000 to convert to a new FRSTDP. If the customer does not select a new FRSTDP, the rates will convert to the prevailing month-to-month Frame Relay rates set forth in Section 18.2.5 following. No Termination Liability Charges will apply for this conversion. (T)

The customer must specify the plan and the length of the service commitment period. Once the plan is established and commitment periods are agreed upon, standard access ordering procedures will be followed.

When a customer converts to a FRSTDP, no Access Order Charges are applied toward facilities in-service at that time. If a customer moves from a month-to-month plan to a FRSTDP or upgrades from one FRSTDP to another, no Access Order Charges are applied.

18. Specialized Network Services (Cont'd)

18.2 Frame Relay Service (Cont'd)

18.2.4 FRS Term Discount Plans (Cont'd)

(C) Service Rearrangements

When a Frame Relay Access Channel Termination, UNI port connection, or NNI port connection committed to an FRSTDP is rearranged, a charge equal to one half the ***respective nonrecurring*** charge associated with the month-to- (T)
month rates will apply. Service rearrangements are changes to existing (installed) services, which do not result in either a change in the minimum period requirements as set forth in Section 5.2.6(E) preceding, or a change in the physical location of the point of termination at the customer-designated premises. Changes in the physical location of the point of termination are treated as disconnects and starts***, and will be assessed the nonrecurring*** (N)
charge associated with the month-to-month rates for that service. (N)

(D) Termination Liabilities

If a customer disconnects any portion of their FRSTDP Service prior to the expiration of the commitment period, the customer will be billed 50 percent of the monthly FRSTDP charges for the remaining portion of the committed term. For example, a customer disconnecting in the twelfth month of a three-year plan will be charged 50 percent of the remaining twenty-four months of billing.

(E) Rate Changes

In this Section, the term "rate" refers to the charges associated with the entire circuit covered by a FRSTDP. Rate increases or decreases will automatically be applied to the monthly term plan rates for the remaining of the FRSTDP. If a Company initiated rate increase causes a customer's rates to increase by 10 percent or more at any one time, the customer may cancel the FRSTDP without incurring Termination Liability Charges.

18. Specialized Network Services (Cont'd)

18.2 Frame Relay Service (Cont'd)

18.2.4 FRS Term Discount Plans (Cont'd)

(F) Extension of a FRSTDP Commitment Period

FRSTDP commitment periods can be extended by the customer at any time during the term of the plan, up to a maximum of five years. The number of months accrued in the current plan will apply toward the new plan selected. For example, a customer having completed fifteen (15) months of a three-year commitment can extend the commitment to five years and no additional charges will be assessed. The first payment will be considered the 16th payment under the new five-year plan.

(G) Renewal of a FRSTDP

At the end of the FRSTDP Service commitment period, the customer may subscribe to a new FRSTDP at the prevailing rates set forth in 18.2.5 following. If the customer does not select a new FRSTDP, the rates will convert to the prevailing month-to-month Frame Relay Access Channel Termination, UNI Port Connection and NNI Port Connection rates set forth in 18.2.5 following. The customer will have a 90-day grace period to renew their FRSTDP before month-to-month rates will be assessed.

(H) Cancellation Charges (N)

When a customer cancels an order for Frame Relay Service being provided under an FRSTDP, cancellation charges as set forth in 5.2.4 preceding, will be calculated using the nonrecurring charges associated with the month-to-month rates for the service being cancelled. (N)

18. Specialized Network Services (Cont'd)

18.2 Frame Relay Service (Cont'd)

18.2.5 Rates and Charges

	Monthly Rate	Nonrecurring Charge	
(A) Frame Relay Access Channel Termination			(T)
56/64 kbps			
Month-to-Month	$ 84.70	$250.00	(D) (D)
Three Year Plan	68.00	0.00	
Five Year Plan	59.00	0.00	
128 kbps			
Month-to-Month	124.00	360.00	(D) (D)
Three Year Plan	116.56	0.00	
Five Year Plan	111.60	0.00	
256 kbps			
Month-to-Month	145.00	360.00	(D) (D)
Three Year Plan	136.30	0.00	
Five Year Plan	121.80	0.00	
384 kbps			
Month-to-Month	165.50	360.00	(D) (D)
Three Year Plan	145.64	0.00	
Five Year Plan	124.13	0.00	
1.544 Mbps			
Month-to-Month	185.00	325.00	(D) (D)
Three Year Plan	148.00	0.00	
Five Year Plan	124.85	0.00	(T)

18. Specialized Network Services (Cont'd)

18.2 Frame Relay Service (Cont'd)

18.2.5 Rates and Charges (Cont'd)

	Monthly Rate	Nonrecurring Charge	
			(T)
(B) User to Network Interface (UNI) Port Connection			
56/64 kbps			
Month-to-Month	$ 95.00	$125.00	
			(D)
			(D)
Three Year Plan	77.90	0.00	
Five Year Plan	73.15	0.00	
128 kbps			
Month-to-Month	155.00	200.00	
			(D)
			(D)
Three Year Plan	127.10	0.00	
Five Year Plan	119.35	0.00	
256 kbps			
Month-to-Month	250.00	250.00	
			(D)
			(D)
Three Year Plan	205.00	0.00	
Five Year Plan	192.50	0.00	
384 kbps			
Month-to-Month	300.00	275.00	
			(D)
			(D)
Three Year Plan	246.00	0.00	
Five Year Plan	231.00	0.00	
1.544 Mbps			
Month-to-Month	426.00	430.00	
			(D)
			(D)
Three Year Plan	349.32	0.00	
Five Year Plan	328.02	0.00	(T)

18. Specialized Network Services (Cont'd)

18.2 Frame Relay Service (Cont'd)

18.2.5 Rates and Charges (Cont'd)

		Monthly Rate	Nonrecurring Charge	
				(T)
(C)	Network to Network Interface (NNI) Port Connection			
	1.544 Mbps			
	Month-to-Month	$426.00	$430.00	
				(D)
				(D)
	Three Year Plan	349.32	0.00	
	Five Year Plan	328.02	0.00	
(D)	Permanent Virtual Circuit With:			
	2.4 kbps CIR	1.95	10.00	
	4.8 kbps CIR	1.95	10.00	
	9.6 kbps CIR	1.95	10.00	
	16.0 kbps CIR	1.95	10.00	
	19.2 kbps CIR	2.00	10.00	
	19.2/20 kbps CIR	2.00	10.00	
	28/32 kbps CIR	3.00	10.00	
	38.4 kbps CIR	3.00	10.00	
	56/64 kbps CIR	4.00	10.00	
	128.0 kbps CIR	9.00	10.00	
	256.0 kbps CIR	9.50	10.00	
	384.0 kbps CIR	10.00	10.00	
	1024.0 kbps CIR	27.00	10.00	
(E)	Administrative Charge	NONE	55.00	(T)