Public Service Commission of South Carolina
Tariff Summary Sheet as of July 11, 2011

BellSouth Telecommunications, Inc. d/b/a AT&T South Carolina

Tariff Service: Access

This document is the complete version of the tariff on file and contains the following approved revisions. Detailed information is available for each revision on the Commission's E Tariff website (http://etariff.psc.sc.gov).

Revision	Date Filed	Effective Date	# of Pages
E2011-216	7/11/11	7/11/11	829
Summary: System Maintenance: Saving a copy of current Access Tariff into revision history for archiving purposes.			
E2011-185	6/30/11	7/11/11	2
Summary: Tariff filing reflects the conversion of BellSouth Telecommunications, Inc. to BellSouth Telecommunications, LLC			
E2011-76	3/25/11	4/21/11	2
Summary: This tariff filing revises the IC Pays Billing option related to equal access subscription.			
E2009-391	11/16/09	12/3/09	74
<u>Summary:</u> AT&T South Carolina's election to operate under S.C. Code Ann. §58-9-576(C) became effective October 1, 2009. As AT&T South Carolina is no longer required to file tariffs for any of its billing and collections services, see S.C. Code Ann. 58-9-576(C), this tariff filing deletes Section E8 of the Access Services Tariff, Billing and Collection Services, effective 12/1/2009			
E2009-175	6/25/09	7/10/09	3
<u>Summary:</u> AT&T South Carolina is making a tariff filing to remove the DS3 Network Interface Unit with Loop Back Capability from the Access Services Tariff. This unit will be provisioned to customers as part of their Special Access (SPA) DS3 service at no additional charge.			
E2008-20	2/4/08	3/26/08	14
<u>Summary:</u> The purpose of this filing is to restructure the manner in which AT&T South Carolina offers services that support the Customer Account Record Exchange (CARE) process to inter-exchange carriers.			
E2007-34	4/3/07	4/9/07	18
Summary: Introduce new MetroE feature			
E2007-15	3/15/07	4/12/07	2
<u>Summary:</u> BellSouth will be doing business in SC as AT&T South Carolina ans AT&T Southeast.			

TITLE PAGE (T)

ACCESS SERVICES TARIFF (T)

FOR THE (T)

STATE OF SOUTH CAROLINA (T)

This Tariff contains Regulations, Rates and Charges applying to the provision of Access Services within a Local Access and Transport Area (LATA) or equivalent market area for Connection to Intrastate Communications Facilities for Customers within the operating territory of BellSouth Telecommunications, ***LLC*** in the State of South Carolina as provided herein.[1] (C)

Note 1: Wherever in this Tariff ***or its headings,*** the term "Company" or the name "Southern Bell Telephone and Telegraph Company"***, "BellSouth Telecommunications"*** or "BellSouth" appears, that shall mean and shall refer to BellSouth Telecommunications, ***LLC*** d/b/a AT&T South Carolina or AT&T Southeast, unless the context clearly indicates otherwise. (C)

All AT&T and BellSouth marks contained herein and as set forth in the trademarks and service marks section of the BellSouth Tariff are owned by AT&T Intellectual Property or AT&T affiliated companies.

ACCESS SERVICES TARIFF FOR THE STATE OF SOUTH CAROLINA (N)

EXPLANATION OF SYMBOLS (N)

When changes are made in any tariff page, a revised page will be issued canceling the tariff page affected; such changes will be identified through the use of the following symbols: (N)

(B)	To signify rates established under bond	(N)
(C)	To signify a changed regulation or tariff	(N)
(D)	To signify discontinued rate, regulation or text	(N)
(I)	To signify increase in rate	(N)
(M)	To signify a move from one page to another with no change to text, regulation or tariff	(N)
(N)	To signify new rate and/or new regulation, and/or new text	(N)
(O)	To signify obsoleted rate, regulation or text	(N)
(R)	To signify reduction in rate	(N)
(S)	To signify matter already appearing in another part of the tariff and repeated for clarification	(N)
(T)	To signify a change in text but no change in rate or regulation	(N)
(U)	To signify USOC added or changed only	(N)

The preceding symbols will apply except where additional symbols are identified at the bottom of an individual page or at the beginning or end of a section or paragraph. (N)

TRADEMARKS AND SERVICEMARKS (N)

BellSouth Intellectual Property Corporation owns the trademarks and servicemarks shown below. All of the trademarks and servicemarks shown below may or may not be an offering available in this Tariff. Marks of other companies will be identified on the tariff page where the mark appears. (N)

BellSouth® AccuPulse® Service (AccuPulse Service) (N)
BellSouth® Digital ESSX® Service (Digital ESSX Service) (N)
BellSouth® ESSX® Service (ESSX Service) (N)
BellSouth® FlexServ® Service (a.k.a. BellSouth SPA Customer Reconfiguration) {FlexServ Service} (N)
BellSouth® LightGate® Service (a.k.a. BellSouth SPA Point to Point Network) {LightGate Service) (N)
BellSouth® MegaLink® Service (MegaLink Service) (N)
BellSouth® MultiServ® Service (MultiServ Service) (N)
BellSouth® Products (BellSouth Products) (N)
BellSouth® Service (BellSouth Service) (N)
BellSouth® SMARTGate® Service (a.k.a. BellSouth SPA Managed Shared Ring Network) {SMARTGate Service} (N)
BellSouth® SMARTLine® Service (SMARTLine Service) (N)
BellSouth® SMARTPath® Service (a.k.a. BellSouth SPA Shared Ring) {SMARTPath Service} (N)
BellSouth® SMARTRing® Service (a.k.a. BellSouth Dedicated Ring) {SMARTRing Service} (N)

All BellSouth marks contained herein and as set forth in the trademarks and servicemarks section of this Tariff are owned by BellSouth Intellectual Property Corporation

TABLE OF CONTENTS

E1. APPLICATION OF TARIFF
E2. GENERAL REGULATIONS
E3. CARRIER COMMON LINE ACCESS
E4. END USER ACCESS
E5. ORDERING OPTIONS FOR BELLSOUTH SWA & SPECIAL ACCESS (A.K.A. BELLSOUTH SPA) SERVICE
E6. BELLSOUTH SWA SERVICE
E7. SPECIAL ACCESS (A.K.A. BELLSOUTH SPA) SERVICE
E8. **(DELETED)** (D)
E9. BELLSOUTH DIRECTORY ASSISTANCE ACCESS SERVICE
E10. LATA CONFIGURATIONS
E11. SPECIAL FACILITIES ROUTING OF ACCESS SERVICES
E12. SPECIALIZED SERVICE OR ARRANGEMENTS
E13. ADDITIONAL ENGINEERING, ADDITIONAL LABOR AND MISCELLANEOUS CHARGES
E14. SPECIAL CONSTRUCTION
E15. RESERVED FOR FUTURE USE
E16. COMPENSATION FOR THE UNAUTHORIZED COMPLETION OF INTRALATA CALLS
E17. RESERVED FOR FUTURE USE
E18. BELLSOUTH OPERATOR SERVICES ACCESS SERVICE
E19. RESERVED FOR FUTURE USE
E20. RESERVED FOR FUTURE USE (T)
E21. FAST PACKET ACCESS SERVICE
E22. RESERVED FOR FUTURE USE
E23. RESERVED FOR FUTURE USE
E24. RESERVED FOR FUTURE USE
E25. RESERVED FOR FUTURE USE
E26. BELLSOUTH SWA CONTRACT TARIFFS
E27. RESERVED FOR FUTURE USE
E28. RESERVED FOR FUTURE USE
E29. OPTICAL TRANSPORT ACCESS SERVICE
E30. RESERVED FOR FUTURE USE
E31. RESERVED FOR FUTURE USE
E32. RESERVED FOR FUTURE USE
E33. RESERVED FOR FUTURE USE
E34. ADVANCED INTELLIGENT NETWORK (AIN) SERVICES

All AT&T and BellSouth marks contained herein and as set forth in the trademarks and service marks section of the BellSouth Tariff are owned by AT&T Intellectual Property or AT&T affiliated companies.

TABLE OF CONTENTS

E100. RESERVED FOR FUTURE USE
E101. RESERVED FOR FUTURE USE
E102. RESERVED FOR FUTURE USE
E103. RESERVED FOR FUTURE USE
E104. RESERVED FOR FUTURE USE
E105. RESERVED FOR FUTURE USE
E106. RESERVED FOR FUTURE USE
E107. RESERVED FOR FUTURE USE
E108. RESERVED FOR FUTURE USE
E109. RESERVED FOR FUTURE USE
E110. RESERVED FOR FUTURE USE
E111. RESERVED FOR FUTURE USE
E112. RESERVED FOR FUTURE USE
E113. OBSOLETE SERVICE OFFERINGS - ADDITIONAL ENGINEERING, ADDITIONAL LABOR AND MISCELLANEOUS CHARGES
E114. RESERVED FOR FUTURE USE (N)
E115. RESERVED FOR FUTURE USE (N)
E116. RESERVED FOR FUTURE USE (N)
E117. RESERVED FOR FUTURE USE (N)
E118. RESERVED FOR FUTURE USE (N)
E119. RESERVED FOR FUTURE USE (N)
E120. RESERVED FOR FUTURE USE (N)
E121. RESERVED FOR FUTURE USE (N)
E122. RESERVED FOR FUTURE USE (N)
E123. RESERVED FOR FUTURE USE (N)
E124. RESERVED FOR FUTURE USE (N)
E125. RESERVED FOR FUTURE USE (N)
E126. OBSOLETE SERVICE OFFERING – BELLSOUTH SWA CONTRACT TARIFFS (N)

All BellSouth marks contained herein and as set forth in the trademarks and servicemarks section of this Tariff are owned by BellSouth Intellectual Property Corporation.

OFFICIAL APPROVED VERSION, RELEASED BY BSTHQ

E1. APPLICATION OF TARIFF

CONTENTS

E1.1 General 1

8em00620 REPRO DATE: 02/07/97 REPRO TIME: 04:07 PM

E1. APPLICATION OF TARIFF

E1.1 General

A. This Tariff contains regulations, rates and charges applicable to the provision of Carrier Common Line, ***BellSouth SWA***, Special Access ***(a.k.a. BellSouth SPA)***, and other miscellaneous services, hereinafter referred to as service(s), provided by the BellSouth Telecommunications, Inc.[1], hereinafter referred to as the Company, to end users as specified in Sections E6., E7. following, and to Interexchange Carriers, Resellers and Alternate Operator Service (AOS) providers, enhanced service providers (as defined in E2.6), 500 Service Providers (as defined in E2.6), and any other entity authorized to order service out of this Tariff, hereinafter referred to as IC(s). (T)

B. The provision of such services by the Company as set forth in this Tariff does not constitute a joint undertaking with the IC for the furnishing of any service.

C. The regulations, rates, and charges contained herein are in addition to the applicable regulations, rates, and charges specified in other tariffs of the Company which are referenced herein.

D. The Company code for South Carolina is 5194.

Note 1: Wherever in this Tariff the name "Southern Bell Telephone and Telegraph Company" or the term "Company" appears, that shall mean and shall refer to BellSouth Telecommunications, Inc., unless the context clearly indicates otherwise.

E2. GENERAL REGULATIONS

CONTENTS

E2.1	**Undertaking of the Company**	1	
E2.1.1	Scope	1	
E2.1.2	Limitations	1	
E2.1.3	Liability	1	
E2.1.4	Provision of Services	2.1	
E2.1.5	Installation and Termination of Services	3	
E2.1.6	Maintenance of Services	3	
E2.1.7	Changes and Substitutions	3	
E2.1.8	Refusal and Discontinuance of Service	3	
E2.1.9	Reserved for Future Use	4	
E2.1.10	Limitation of Use of Metallic Facilities	4	
E2.1.11	Notification of Service-Affecting Activities	4	
E2.1.12	Coordination with Respect to Network Contingencies	4	
E2.1.13	Provision and Ownership of Telephone Numbers	4	
E2.2	**Use**	5	
E2.2.1	Reserved for Future Use	5	
E2.2.2	Interference or Impairment	5	
E2.2.3	Unlawful Use	5	
E2.2.4	**(DELETED)**	5	(D)
E2.3	**Obligations of the IC**	5	
E2.3.1	Damages	5	
E2.3.2	Ownership of Facilities and Theft	5	
E2.3.3	Equipment Space and Power	6	
E2.3.4	Reserved for Future Use	6	
E2.3.5	Reserved for Future Use	6	
E2.3.6	Availability for Testing	6	

All BellSouth marks contained herein and as set forth in the trademarks and servicemarks section of this Tariff are owned by BellSouth Intellectual Property Corporation.

E2. GENERAL REGULATIONS

CONTENTS

E2.3 Obligations of the IC (Cont'd)

E2.3.7	Balance	6	
E2.3.8	Design of IC Services	6	
E2.3.9	References to the Company	6	
E2.3.10	Reserved for Future Use	6	(T)
E2.3.11	Claims and Demands for Damages	7	
E2.3.12	Reserved for Future Use	7	
E2.3.13	Coordination with Respect to Network Contingencies	7	
E2.3.14	Jurisdictional Report Requirements	7	
E2.3.15	Determination of Intrastate Charges for Mixed Interstate and Intrastate Access Service	8.3	
E2.3.16	Sectionalization - Trouble Reporting	8.3	
E2.3.17	Reserved for Future Use	8.3	
E2.3.18	Reserved for Future Use	8.3	
E2.3.19	800 Number Reporting	8.4	
E2.3.20	***BellSouth SWA*** Service Credit	8.4	(T)
E2.3.21	Utilization of Alternative Access Providers	8.4	

E2.4 Payment Arrangements and Credit Allowances 9

E2.4.1	Payment of Rates, Charges and Deposits	9
E2.4.2	Minimum Periods	10.1
E2.4.3	Cancellation of an Order for Service	11
E2.4.4	Credit Allowance for Service Interruptions	11
E2.4.5	Reserved for Future Use	12
E2.4.6	Re-establishment of Service Following Fire, Flood or Other Occurrence	12
E2.4.7	Title or Ownership Rights	13
E2.4.8	Billing of Access Service Provided By Multiple Companies	13
E2.4.9	Optional Payment Plan	13.1.2
E2.4.10	Service Installation Guarantee	14

E2. GENERAL REGULATIONS

CONTENTS

E2.5 Connections 14
E2.5.1 General 14
E2.5.2 Reserved for Future Use 14
E2.5.3 Reserved for Future Use 15
E2.5.4 Reserved for Future Use 16
E2.5.5 Reserved for Future Use 21
E2.5.6 Reserved for Future Use 24
E2.5.7 Reserved for Future Use 24
E2.5.8 Reserved for Future Use 25
E2.5.9 Reserved for Future Use 25
E2.5.10 Reserved for Future Use 27
E2.5.11 Reserved for Future Use 29
E2.5.12 Reserved for Future Use 30
E2.5.13 Reserved for Future Use 32
E2.6 Definitions 33
E2.7 Special Promotions 42
E2.7.1 Regulations 42
E2.8 Change in Recurring Rates Notification Requirements 43
E2.9 Reserved for Future Use 43
E2.10 Reserved for Future Use 43
E2.11 Trademarks and Servicemarks Protection 43 (T)
E2.11.1 Use of ***Trademarks and Servicemarks*** 43 (T)

All BellSouth marks contained herein and as set forth in the trademarks and servicemarks section of this Tariff are owned by BellSouth Intellectual Property Corporation

E2. GENERAL REGULATIONS

E2.1 Undertaking of the Company

E2.1.1 Scope

A. The Company does not undertake to transmit messages under this Tariff.

B. The Company shall be responsible only for the installation, operation and maintenance of the services it provides.

C. The Company will, for maintenance purposes, test its services only to the extent necessary to detect and/or clear troubles.

D. Services are provided 24 hours daily, seven days per week except as set forth in other applicable sections of this Tariff.

E. The Company does not warrant that its facilities and services meet standards other than those set forth in this Tariff.

E2.1.2 Limitations

A. The IC may not assign or transfer the use of services provided under this Tariff, except as provided herein**.** Where there is no interruption of use or relocation of the services, such assignment or transfer may be made to:

1. Another IC, whether an individual, partnership, association or corporation, provided the assignee or transferee assumes all outstanding indebtedness for such services, and the unexpired portion of the minimum period and the termination liability applicable to such services, if any; or
2. A court appointed receiver, trustee or other person acting pursuant to law in bankruptcy, receivership, reorganization, insolvency, liquidation or other similar proceedings, provided the assignee or transferee assumes the unexpired portion of the minimum period and the termination liability applicable to such services, if any.

In all cases of assignment or transfer, the written acknowledgement of the Company is required prior to such assignment or transfer. Such acknowledgement shall be made within fifteen days from the receipt of notification. All regulations and conditions contained in this Tariff shall apply to such assignee or transferee.

The assignment or transfer of services does not relieve or discharge the assignor or transferor from remaining jointly or severally liable with the assignee or transferee for any obligations existing at the time of the assignment or transfer.

B. The use and restoration of services shall be in accordance with Part 64, Subpart D, Appendix A, of the Federal Communications Commission's Rules and Regulations, which specifies the priority system for such activities.

C. Subject to compliance with the rules mentioned in B. preceding, the services offered herein will be provided to ICs on a first come, first served basis.

D. Terms and conditions for central office interconnection of collocator-provided Company leased equipment are set forth in BellSouth Telecommunications, Inc., Tariff F.C.C. No. 1, Section 20. Virtual Collocation Cross-Connect rates and charges are provided in Sections E6. and E7. of this Tariff for each service allowed under collocation guidelines. (N)

E2.1.3 Liability

A. The Company's liability, if any, for its willful misconduct is not limited by this Tariff. With respect to any other claim or suit, by an IC, End User or by any others, for damages associated with the installation, provision, preemption, termination, maintenance, repair or restoration of service, and subject to the provisions of B. through I. following, the Company's liability, except as set forth in E8.1.3 ***of this Tariff***, if any, shall not exceed an amount equal to the proportionate charge for the service for the period during which the service was affected. This liability for damages shall be in addition to any amounts that may otherwise be due the IC or end user under this Tariff as a Credit Allowance for a Service Interruption. (T)

E2. GENERAL REGULATIONS

E2.1 Undertaking of the Company (Cont'd)

E2.1.3 Liability (Cont'd)

B. The Company shall not be liable for any act or omission of any other carrier or IC providing a portion of a service, nor shall the Company for its own act or omission hold liable any other carrier or IC providing a portion of a service.

C. The Company shall not be liable for any act or omission concerning the implementation of presubscription as set forth in E13.3.3 following, unless the omission is caused by the Company's willful misconduct. (N)

D. The Company is not liable for damages to the IC terminal location or end user's premises resulting from the furnishing of a service, including the installation and removal of equipment and associated wiring, unless the damage is caused by the Company's negligence.

E. The Company shall be indemnified, defended and held harmless by the end user against any claim, loss or damage arising from the end user's use of services offered under this Tariff, involving:

1. Claims for libel, slander, invasion of privacy, or infringement of copyright arising from the end user's own communications;
2. Claims for patent infringement arising from the end user's acts combining or using the service furnished by the Company in connection with facilities or equipment furnished by the IC or end user or;
3. All other claims arising out of any act or omission of the end user in the course of using services provided pursuant to this Tariff.

F. The Company shall be indemnified, defended and held harmless by the IC against any claim, loss or damage arising from the IC's use of services offered under this Tariff, involving:

1. Claims for libel, slander, invasion of privacy, or infringement of copyright arising from the IC's own communications;
2. Claims for patent infringement arising from the IC's acts combining or using the service furnished by the Company in connection with facilities or equipment furnished by the end user or IC or;
3. All other claims arising out of an act or omission of the IC in the course of using services provided pursuant to this Tariff.

G. The Company does not guarantee or make any warranty with respect to its services when used in an explosive atmosphere. The Company shall be indemnified, defended and held harmless by the IC or end user from any and all claims by any person relating to such IC or end user use of the services so provided.

H. No license under patents (other than the limited license to use) is granted by the Company or shall be implied or arise by estoppel, with respect to any service offered under this Tariff. The Company will defend the IC or end user against claims of patent infringement arising solely from the use by the IC or end user of services offered under this Tariff and will indemnify such IC or end user for any damages awarded based solely on such claims.

I. The Company's failure to provide or maintain services under this Tariff shall be excused by labor difficulties, governmental orders, civil commotions, criminal actions taken against the Company, acts of God and other circumstances beyond the Company's reasonable control, subject to the Credit Allowance for Service Interruptions as set forth in E2.4.4 following.

E2. GENERAL REGULATIONS

E2.1 Undertaking of the Company (Cont'd)

E2.1.3 Liability (Cont'd)

J. Should any federal, state or local jurisdiction determine that sales, use, gross receipts or any other taxes (including interest, penalties and surcharges thereon) are due by the Company as a result of the Company's purchase of accounts receivable, the Company will advise the IC and the IC shall be liable for any such tax, interest, penalties and surcharge, and the IC shall immediately reimburse the Company the amount of such tax, interest, penalties and surcharge paid by the Company. If the IC disagrees with the Company's determination that any taxes are due by the Company or disagrees with an assessment of any tax, penalty, surcharge and interest due by the Company as a result of the Company's purchase of accounts receivable, the IC shall, at its option and expense (including immediate payment of any such assessment), have the right to seek a ruling as to the inapplicability of any such tax or to protest any assessment and participate in any legal challenge to such assessment, but shall be liable for any tax, penalty, surcharge and interest ultimately determined to be due.

K. Unauthorized Computer Intrusion

The Company's liability, if any, for its willful misconduct is not limited by this section of this Tariff. With respect to any other claim or suit by a subscriber, common carrier, reseller, or any other party for damages caused by, or associated with, any unauthorized computer intrusion, including but not limited to the input of damaging information such as a virus, time bomb, any unauthorized access, interference, alteration, destruction, theft of, or tampering with, a Company computer, switch, data, database, software, information, network or other similar system, the Company's liability, if any, shall not exceed an amount equal to the proportionate charge by the Company for the service for the period during which the service provided by the Company was affected or so utilized.

Each subscriber of the Company shall be responsible for providing appropriate security measures to protect the subscriber's computer, data, or telecommunications network.

L. Transmission of Data

Voice-grade lines are primarily conditioned to handle data speeds up to 9.6 kilobits per second (kbps). ***The Company makes no guarantee that voice-grade access lines and/or facilities are suitable for the transmission of data. However, in those cases where the transmission of data is attempted***, the Company shall not be held liable for any damage, harm or loss of data caused by the subscriber using the Company's voice-grade telephone access lines and/or facilities for the transmission of data. The Company's liability shall be limited to errors or damages to the transmission of voice messages over these facilities, and the liability shall be limited to an amount equal to the proportionate amount of the Company's billing for the period of service during which the errors or damages occur. (T)

The Company's liability for damages or errors caused during the transmission of data over any of the Company's data facilities shall be limited to an amount equal to the proportionate charge for the service for the period during which the service was affected.

M. Errors or Damages Caused by System Date Limitations

The Company's liability for errors or damages resulting from the inability of the Company's systems to process dates, such as the Year 2000, shall be limited to an amount equal to the proportionate amount of the Company's billing for the period of service during which the errors or damages occur.

N. Unauthorized Devices

The Company shall not be held liable or responsible for any damage or harm that may occur as the result of unauthorized devices or the failure of the Company to detect unauthorized devices on the subscriber's line.

E2.1.4 Provision of Services

The Company, to the extent that such services are or can be made available with reasonable effort, and after provision has been made for the Company's telephone exchange services, will provide to the IC upon reasonable notice services offered in other applicable sections of this Tariff at rates and charges specified therein.

E2. GENERAL REGULATIONS

E2.1 Undertaking of the Company (Cont'd)

E2.1.5 Installation and Termination of Services

The services provided under this Tariff (a) will include any entrance cable or drop wiring and wire or intrabuilding cable to that point where provision is made for termination of the Company's outside distribution network facilities at a suitable location inside of the IC terminal location or End User premises and, (b) will be installed by the Company to such point of termination. Access Service has only one Point of Termination per IC terminal location and/or end user premises. Any additional terminations beyond such Point of Termination is the sole responsibility of the IC or the IC's end user. The Point of Termination is an inherent part of BellSouth SWA and Special Access (a.k.a. BellSouth SPA) services, therefore, the preceding does not preclude the IC's ability to have the Point of Termination moved as set forth in E6.7.7 and E7.4.4 following for BellSouth SWA and Special Access (a.k.a. BellSouth SPA) services, respectively.

E2.1.6 Maintenance of Services

The services provided under this Tariff shall be maintained by the Company. The IC or others may not rearrange, move, disconnect, remove or attempt to repair any facilities provided by the Company, other than by connection or disconnection to any interface means used, except with the written consent of the Company.

E2.1.7 Changes and Substitutions

The Company may, where such action is reasonably required in the operation of its business:

A. Substitute, change or rearrange any facilities used in providing service under this Tariff, including but not limited to:

1. Substitution of different metallic facilities,
2. Substitution of carrier or derived facilities for metallic facilities, used to provide other than metallic facilities, and
3. Substitution of metallic facilities for carrier or derived facilities used to provide other than metallic facilities,

B. Change minimum protection criteria,

C. Change operating or maintenance characteristics of facilities, or,

D. Change operations or procedures of the Company.

In case of any such substitution, change or rearrangement, the transmission parameters will be within the range as set forth in Sections E6. and E7. following. The Company shall not be responsible if any such substitution, change or rearrangement renders any IC furnished services obsolete or requires modification or alteration thereof or otherwise affects their use or performance. If such substitution, change or rearrangement materially affects the operating characteristics of the facility, the Company will provide reasonable notification to the IC in writing. Reasonable time will be allowed for any redesign and implementation required by the change in operating characteristics. The Company will work cooperatively with the IC to determine reasonable notification procedures.

E2.1.8 Refusal and Discontinuance of Service

A. Unless the provisions of E2.2.2.B. following apply, if the IC or End User fails to comply with the provisions of this Tariff, including any payments to be made by it on the dates and times herein specified, the Company may, on thirty (30) days written notice by certified U.S. mail to the person designated by the IC or End User to receive such notices of noncompliance, refuse additional applications for service and/or refuse to complete any pending orders for service by the noncomplying IC or End User at any time thereafter. If the Company does not refuse additional applications for service on the date specified in the thirty (30) days notice, and the IC's or End User's noncompliance continues, nothing contained herein shall preclude the Company's right to refuse additional applications for service to the noncomplying IC or End User without further notice.

B. Unless the provisions of E2.2.2.B or E2.5 following apply, if the IC or End User fails to comply with the provisions of this Tariff ***and in particular E2.1.6, preceding or E2.2.3, E2.3.1, E2.3.6, E2.3.7, E2.3.14 or E2.4 following,*** including any payments to be made by it on the dates and times herein specified, the Company may, on thirty (30) ***calendar*** days written notice ***by Certified Mail or Overnight Delivery*** to the person designated by the IC or End User to receive such notices of noncompliance, discontinue the provision of the services to the non-complying IC or end user at any time thereafter. In the case of such discontinuance, all applicable charges, including termination charges, shall become due. If the Company does not discontinue the provision of the services involved on the date specified in the thirty (30) days notice, and the IC's or End User's noncompliance continues, nothing contained herein shall preclude the Company's right to discontinue the provision of the services to the non-complying IC or end user without further notice. (M)(C)

All BellSouth marks contained herein and as set forth in the trademarks and servicemarks section of this Tariff are owned by BellSouth Intellectual Property Corporation.

E2. GENERAL REGULATIONS

E2.1 Undertaking of the Company (Cont'd)

E2.1.8 Refusal and Discontinuance of Service (Cont'd)

(M)

C. In addition to and not in limitation of the provisions of E2.1.8.A. and E2.1.8.B. preceding, unless the provisions of E2.2.2.B. or E2.5. following apply, if a customer fails to comply with E2.4.1.A. or with E2.4.1.B.3. following, including any payment to be made by it on the dates and times herein specified, the Company may take actions specified in E2.1.8.A. and E2.1.8.B. on fifteen (15) calendar days written notice, such notice period to start the day after the notice is rendered by Certified Mail or Overnight Delivery, if the customer has not complied with respect to amounts due in a subject bill and either: (N)

1. The Company has within seven (7) business days of the subject bill date: (N)
   a. Mailed via the United States Postal Service (USPS) to the customer the subject bill in paper or CDROM form, or (N)
   b. Overnight service delivered to the customer the subject bill in Magnetic Tape form, or (N)
   c. Electronically Transmitted to the customer the subject bill. (N)

   The Company will maintain records sufficient to validate the date upon which a subject bill was rendered to the customer. (N)
2. The Company has rendered the subject bill, using one of the media described in 1. above, to the customer more that thirty (30) calendar days before notice under this section has been rendered. (N)

In all other cases, the Company will give thirty (30) calendar days written notice pursuant to E2.1.8.A. of E2.1.8.B.. Action will not be taken with regard to the subject bill if the customer cures the noncompliance prior to the expiration of the fifteen (15) or thirty (30) calendar day notice period, as applicable. (N)

E2.1.9 Reserved for Future Use

E2.1.10 Limitation of Use of Metallic Facilities

Signals applied to the metallic facility shall conform to the limitations set forth in Technical Reference Publication AS No. 1. In the case of application of dc telegraph signaling systems, the IC shall be responsible, at its expense, for the provision of current limiting devices to protect the Company facilities from excessive current due to abnormal conditions and for the provision of noise mitigation networks when required to reduce excessive noise.

E2.1.11 Notification of Service-Affecting Activities

The Company will provide the IC reasonable notification of service-affecting activities that may occur in normal operation of its business. Such activities may include, but are not limited to, equipment or facilities additions, removals or rearrangements, routine preventive maintenance and major switching machine change-out. Generally, such activities are not individual IC service specific, they affect many IC services. No specific advance notification period is applicable to all service activities. The Company will work cooperatively with the IC to determine the notification requirements.

E2.1.12 Coordination with Respect to Network Contingencies

The Company intends to work cooperatively with the IC to develop network contingency plans in order to maintain maximum network capability following natural or man-made disasters that affect telecommunications services.

This includes developing plans for originating or terminating traffic associated with mass calling events directed to end users served from specific end offices. Where it is determined that such non-random calling generates problems on the Telephone Company's Common Transport network, the Telephone Company will work cooperatively with the customer to relieve the traffic congestion. Remedial measures may include isolation of the customer from the Telephone Company network in the impacted area for the duration of the problem or until the customer notifies the Telephone Company that the problem has been resolved.

E2.1.13 Provision and Ownership of Telephone Numbers

The Company reserves the reasonable right to assign, designate or change telephone numbers, any other call number designations associated with Access Service, or the Company serving central office prefixes associated with such numbers, when necessary in the conduct of its business. Should it become necessary to make a change in such number(s), the Company will furnish to the IC or End User 6 months notice, in writing by certified U.S. mail of the effective date and an explanation of the reason(s) for such change(s).

Material previously appearing on this page now appears on page(s) 3 of this section.

All BellSouth marks contained herein and as set forth in the trademarks and servicemarks section of this Tariff are owned by BellSouth Intellectual Property Corporation.

E2. GENERAL REGULATIONS

E2.2 Use

E2.2.1 Reserved for Future Use

E2.2.2 Interference or Impairment

A. The characteristics and methods of operation of any circuits, facilities or equipment provided by other than the Company and associated with the facilities utilized to provide services under this Tariff shall not interfere with or impair service over any facilities of the Company, its affiliated companies, or its connecting and concurring carriers involved in its services, cause damage to their plant, impair the privacy of any communications carried over their facilities or create hazards to the employees of any of them or the public.

B. If such characteristics or methods of operation are not in accordance with A. preceding, the Company will, where practicable, notify the IC or end user that temporary discontinuance of the use of a service may be required; however, where prior notice is not practicable, nothing contained herein shall be deemed to preclude the Company's right to temporarily discontinue forthwith the use of a service if such action is reasonable under the circumstances. In case of such temporary discontinuance, the IC or end user will be promptly notified and afforded the opportunity to correct the condition which gave rise to the temporary discontinuance. During such period of temporary discontinuance, credit allowance for service interruptions as set forth in E2.4.4 following is not applicable.

E2.2.3 Unlawful Use

The service provided under this Tariff shall not be used for an unlawful purpose.

E2.2.4 (DELETED) (D)

E2.3 Obligations of the IC

E2.3.1 Damages

The IC shall reimburse the Company for damages to Company facilities utilized to provide services under this Tariff caused by the negligence or willful act of the IC or an end user or resulting from improper use of the Company facilities, or due to malfunction of any facilities or equipment provided by other than the Company. Nothing in the foregoing provision shall be interpreted to hold one IC or end user liable for another IC's or end user's action. The Company will, upon reimbursement for damages, cooperate with the IC in prosecuting a claim against the person causing such damage and the IC shall be subrogated to the right of recovery by the Company for the damages to the extent of such payment.

E2.3.2 Ownership of Facilities and Theft

Facilities utilized by the Company to provide service under the provisions of this Tariff shall remain the property of the Company. Such facilities shall be returned to the Company by the IC or end user, whenever requested, within a reasonable period following the request in as good condition as reasonable wear will permit.

All BellSouth marks contained herein and as set forth in the trademarks and servicemarks section of this Tariff are owned by BellSouth Intellectual Property Corporation.

E2. GENERAL REGULATIONS

E2.3 Obligations of the IC (Cont'd)

E2.3.3 Equipment Space and Power

The IC shall furnish or arrange to have furnished to the Company, at no charge, equipment space and electrical power required by the Company to provide services under this Tariff at the points of termination of such services. The selection of ac or dc power shall be mutually agreed to by the IC and the Company. The IC shall also make necessary arrangements in order that the Company will have access to such spaces at reasonable times for installing, testing, repairing or removing Company services.

E2.3.4 Reserved for Future Use (T)

E2.3.5 Reserved for Future Use (T)

E2.3.6 Availability for Testing

The services provided under this Tariff shall be available to the Company at times mutually agreed upon in order to permit the Company to make tests and adjustments appropriate for maintaining the services in satisfactory operating condition. Such tests and adjustments shall be completed within a reasonable time. No credit will be allowed for any interruptions involved during such tests and adjustments.

E2.3.7 Balance

All signals for transmission over the services provided under this Tariff shall be delivered by the IC balanced to ground except for ground start, duplex (DX) and McCulloh-Loop (Alarm System) type signaling and dc telegraph transmission at speeds of 75 baud or less.

E2.3.8 Design of IC Services

Subject to the provisions of E2.1.7 preceding, the IC shall be solely responsible, at its own expense, for the overall design of its services and for any redesigning or rearrangement of its services which may be required because of changes in facilities, operations or procedures of the Company, minimum protection criteria or operating or maintenance characteristics of the facilities.

E2.3.9 References to the Company

The IC may advise the end user that certain services are provided by the Company in connection with the service the IC furnishes to its end users; however, the IC shall not represent that the Company jointly participates in the IC's services.

E2.3.10 Reserved for Future Use (T)

E2. GENERAL REGULATIONS

E2.3 Obligations of the IC (Cont'd)

E2.3.11 Claims and Demands for Damages

A. With respect to claims of patent infringement made by third persons, the IC shall defend, indemnify, protect and save harmless the Company from and against all claims arising out of the combining with, or use in connection with, the services provided under this Tariff, any circuit, apparatus, system or method provided by the IC or end users.

B. The IC shall defend, indemnify and save harmless the Company from and against any suits, claims, losses or damages, including punitive damages, attorney fees and court costs by third persons arising out of the construction, installation, operation, maintenance, or removal of the IC's circuits, facilities, or equipment connected to the Company's services provided under this Tariff including, without limitation, Workmen's Compensation claims, actions for infringement of copyright and/or unauthorized use of program material, libel and slander actions based on the content of communications transmitted over the IC's circuits, facilities or equipment, and proceedings to recover taxes, fines, or penalties for failure of the IC to obtain or maintain in effect any necessary certificates, permits, licenses, or other authority to acquire or operate the services provided under this Tariff; provided, however, the foregoing indemnification shall not apply to suits, claims, and demands to recover damages for damage to property, death, or personal injury unless such suits, claims or demands are based on the tortuous conduct of the IC, its officers, agents or employees.

E2.3.12 Reserved for Future Use

E2.3.13 Coordination with Respect to Network Contingencies

The IC shall, in cooperation with the Company, coordinate in planning the actions to be taken to maintain maximum network capability following natural or man-made disasters, which affect telecommunications services.

E2.3.14 Jurisdictional Report Requirements[1]

A. Jurisdictional Reports

1. Percent Interstate Usage (PIU)

   a. When the Company receives sufficient call detail to permit it to determine the jurisdiction of originating and terminating access minutes of use, the Company will bill according to these actual minutes of use or messages and will not use customer reported Percent Interstate Usage (PIU) factors. The Company developed percent interstate usage for access minutes of use will be determined at a statewide level.

   Interstate percentage will be developed on a monthly basis by end office, when the access minutes are measured by dividing the measured interstate originating or terminating access minutes (the access minutes where the calling number is in one state and the called number is in another state) by the total originating or terminating access minutes.

   The Company will bill according to actual measured minutes of use or messages for all services listed in b. and 5. following, with the exception of those listed following:

   - BellSouth SWA Local Channel
   - BellSouth SWA Dedicated Interoffice Channel
   - BellSouth Billing Name and Address
   - BellSouth Inward Operator Service
   - Channelization Equipment
   - DNALs associated with BellSouth SWA LSBSA

(M)

Note 1: Except where indicated herein, references to BellSouth SWA FGs will also include the applicable BellSouth SWA Basic Serving Arrangement as detailed in the matrix in E6.1.3.A. of this Tariff (e.g., the term BellSouth SWA FGA represents both BellSouth SWA FGA and BellSouth SWA LSBSA).

Material previously appearing on this page now appears on page(s) 7.0.0.1 of this section.

All BellSouth marks contained herein and as set forth in the trademarks and servicemarks section of this Tariff are owned by BellSouth Intellectual Property Corporation.

E2. GENERAL REGULATIONS

E2.3 Obligations of the IC (Cont'd)

E2.3.14 Jurisdictional Report Requirements[1] (Cont'd)

A. Jurisdictional Reports (Cont'd)

1. Percent Interstate Usage (PIU) (Cont'd)

a. (Cont'd) (M)

Where the Company receives insufficient call detail to identify the calling station to determine the jurisdiction, the Company will charge the applicable rates for terminating BellSouth SWA as set forth in this Tariff. There may be a percentage of usage where it is not possible to know, and therefore to send to BellSouth, the needed originating information. Accordingly, BellSouth will charge the terminating BellSouth SWA rate for only those minutes lacking originating information from all SWA customers, currently 7.00 percent (%) (the "floor***"). A 2.00 percent (%) grace threshold will be granted in conjunction with the floor. When the percentage of the carrier's traffic without the sufficient call detail to determine jurisdiction does not exceed the sum of the floor plus the grace threshold, or 9.00 percent (%), BellSouth will not apply the provisions of this tariff. When the percentage is greater than 9.00 percent (%), BellSouth will exercise the provisions of this tariff.*** For example, if 30.00 ***percent*** (%) of a customer's minutes sent to BellSouth do not contain sufficient originating information to allow BellSouth to determine the originating location, then BellSouth would apply the provisions of this tariff to those minutes exceeding the "floor", or 23.00 percent (%) in this example. (M)

Note 1: Except where indicated herein, references to BellSouth SWA FGs will also include the applicable BellSouth SWA Basic Serving Arrangement as detailed in the matrix in E6.1.3.A. of this Tariff (e.g., the term BellSouth SWA FGA represents both BellSouth SWA FGA and BellSouth SWA LSBSA). (M)

Material appearing on this page previously appeared on page(s) 7 of this section.

All BellSouth marks contained herein and as set forth in the trademarks and servicemarks section of this Tariff are owned by BellSouth Intellectual Property Corporation.

E2. GENERAL REGULATIONS

E2.3 Obligations of the IC (Cont'd)

E2.3.14 Jurisdictional Report Requirements[1] (Cont'd)

A. Jurisdictional Reports (Cont'd)

1. Percent Interstate Usage (PIU) (Cont'd)

a. (Cont'd)

BellSouth will recalculate the overall SWA customer average "floor" quarterly. In addition, subsequent reviews or audits of specific customer usage may result in a new "floor" for that customer. (N)

In the event that BellSouth applies the intrastate terminating access rate to calls without sufficient originating information as provided in this tariff, BellSouth's access customers will have the opportunity to request backup documentation of BellSouth's basis for such application, and further request that BellSouth change the application of the intrastate access rate upon a showing of why the intrastate rate should not be applied. (N)

For purpose of this tariff, where the customer is a third-party provider CCS7 services to its customer ("Third Party Customers"), the customer will develop its projected PIU factor based upon a weighted average of the PIU's of its Third Party Customers' end user traffic in accordance with procedures described below. In the event a Third Party Customer does not provide appropriate PIU, a 50 percent PIU will be utilized for that Third Party Customer. (M)

The IC will provide in its initial order the projected Percent Interstate Usage (PIU) at a statewide level on a local exchange company specific basis. When the IC computes the PIU it will subtract the developed PIU from one hundred and the difference is the percent intrastate usage. The sum of the interstate and intrastate percentage will equal one hundred percent. A PIU of less than 100 percent is not allowed where the service is not also available as an intrastate access service. The projected PIU may include up to two decimals.

The intrastate usage is to be developed as though every call that originates from a calling location (as designated by the calling station number) within the same state as that in which the called station (as designated by the called station number) is situated is an intrastate communication and every call for which the point of origination (as designated by the calling station number) is in a state other than that where the called station (as designated by the called station number) is situated is an interstate communication. The manner is which a call is routed through the telecommunications network does not affect the jurisdiction of a call, i.e., a call between two points within the same state is an intrastate communication even if the call is routed through another state.

The Company will designate the number obtained by subtracting the intrastate percentage furnished by the IC from 100 (100 – IC percentage – interstate percentage) as the projected.

When an IC initially orders service(s), as defined in the following, the IC will state in its order the Percent Interstate Usage (PIU) separately for each, as set forth in a. preceding.

- BellSouth CCS7 Access Arrangement
- BellSouth SWA FGA
- BellSouth SWA FGB
- BellSouth SWA FGD
- BellSouth SWA 500 Service
- 700 Service Access
- BellSouth SWA 8XX Toll Free Dialing Ten Digit Screening Service
- BellSouth SWA 900 Service
- Switched Local Channel
- BellSouth SWA Dedicated Interoffice Channel
- Channelization Equipment
- DNALs associated with BellSouth SWA LSBSA[2]

Note 1: Except where indicated herein, references to BellSouth SWA FGs will also include the applicable BellSouth SWA Basic Serving Arrangement as detailed in the matrix in E6.1.3.A. of this Tariff (e.g., the term BellSouth SWA FGA represents both BellSouth SWA FGA and BellSouth SWA LSBSA).

Note 2: Where BellSouth SWA LSBSA is provisioned with a DNAL, the DNAL rates should be apportioned between interstate and intrastate using the same PIU factor as is applied to the associated BellSouth SWA LSBSA.

Material previously appearing on this page now appears on page(s) 7.1 of this section.
Material appearing on this page previously appeared on page(s) 7 of this section.

.

E2. GENERAL REGULATIONS

E2.3 Obligations of the IC (Cont'd)

E2.3.14 Jurisdictional Report Requirements[1] (Cont'd)

A. Jurisdictional Reports (Cont'd)

1. Percent Interstate Usage (PIU) (Cont'd)

a. (Cont'd)

- BellSouth Billing Name and Address (M)
- BellSouth Inward Operator Service (M)

The Percent Interstate usage factors associated with BellSouth SWA FGA, BellSouth SWA FGB, BellSouth SWA FGD and BellSouth SWA 500, 700, BellSouth SWA 8XX Toll Free Dialing Ten Digit Screening and BellSouth SWA 900 service this PIU will also apply to all associated elements and service, e.g., Carrier Common Line, Local Switching, BellSouth SWA Common Interoffice Channel, Interconnection, Access Tandem Switching, Common Trunk Port Service and minute of use based multiplexer rate elements, where applicable.

The PIU category, BellSouth SWA Local Channel, includes Dedicated End Office Trunk Port Service and Dedicated Tandem Trunk Port Service charges and other flat rated charges not specifically covered by other PIU categories.

The customer will provide a single factor as the projected Percent Interstate Usage (PIU) to apportion the usage between interstate and intrastate. This factor will be applied to the following categories:

- Switched Local Channel
- BellSouth SWA Dedicated Interoffice Channel
- Channelization Equipment

The PIU factor provided for each of the foregoing facilities categories (Switched Local Channel, BellSouth SWA Dedicated Interoffice Channel and Channelization Equipment) will reflect the combination of all traffic types which traverse such facility category.

Note 1: Except where indicated herein, references to BellSouth SWA FGs will also include the applicable BellSouth SWA Basic Serving Arrangement as detailed in the matrix in E6.1.3.A. of this Tariff (e.g., the term BellSouth SWA FGA represents both BellSouth SWA FGA and BellSouth SWA LSBSA).

E2. GENERAL REGULATIONS

E2.3 Obligations of the IC (Cont'd)

E2.3.14 Jurisdictional Report Requirements[1] (Cont'd)

A. Jurisdictional Reports (Cont'd)

1. Percent Interstate Usage (PIU) (Cont'd)

a. (Cont'd)

When Special Access (a.k.a. BellSouth SPA) service is provided on a BellSouth SWA facility, e.g., Special Access DS1 (a.k.a. BellSouth SPA DS1) on a BellSouth SWA DS3, the facility will be apportioned between BellSouth SWA and Special Access (a.k.a. BellSouth SPA). The jurisdiction of the Special Access (a.k.a. BellSouth SPA) service shall reflect the composite of the jurisdiction of the lower capacity services, if any, of which it is comprised.

The IC shall compute the PIU using the following formula (rounded to a whole percentage).

$$\frac{\text{Total Interstate Originating Minutes} + \text{Total Interstate Terminating Minutes}}{\text{Total Originating Minutes} + \text{Total Terminating Minutes}}$$

(T)

Note 1: Except where indicated herein, references to BellSouth SWA FGs will also include the applicable BellSouth SWA Basic Serving Arrangement as detailed in the matrix in E6.1.3.A. (e.g., the term BellSouth SWA FGA represents both BellSouth SWA FGA and BellSouth SWA LSBSA).

E2. GENERAL REGULATIONS

E2.3 Obligations of the IC (Cont'd)

E2.3.14 Jurisdictional Report Requirements[1] (Cont'd)

A. Jurisdictional Reports (Cont'd)

2 For BellSouth Directory Assistance Access service, the Company developed PIU for BellSouth SWA FGD terminating will apply.

3. ***BellSouth CCS7 Access Arrangement, the customer must state in its order the PIU anticipated as specified a. preceding. The PIU reported will then be applied to the rates for Signaling Connections, Terminations and Usage to arrive at the amount the customer is billed for interstate usage of these facilities each month.*** (C)

In addition, the PIU will be applied to the total messages and the resulting figure multiplied by the appropriate rate per message to determine the amount that the customer will be billed for interstate usage. Subsequent PIU factors will be reported as required in 4. following. (N)

Note 1: Except where indicated herein, references to BellSouth SWA FGs will also include the applicable BellSouth SWA Basic Serving Arrangement as detailed in the matrix in E6.1.3.A. ***of this Tariff*** (e.g., the term BellSouth SWA FGA represents both BellSouth SWA FGA and BellSouth SWA LSBSA). (T)

E2. GENERAL REGULATIONS

E2.3 Obligations of the IC (Cont'd)

E2.3.14 Jurisdictional Report Requirements[1] (Cont'd)

A. Jurisdictional Reports (Cont'd)

4. ***Effective July 1, 2001, the customer will update the jurisdictional report associated with BellSouth CCS7 Access Arrangement, when both interstate and intrastate service is provided.*** (C)

   Effective October 1, 2000, the customer will provide a single factor as the projected Percent Interstate Usage (PIU) to apportion the usage between interstate and intrastate. This PIU will apply to the following categories: Switched Local Channel, BellSouth SWA Dedicated Interoffice Channel and Channelization Equipment.

   Effective July 1, 2000, the IC's projected Percent Interstate Usage (PIU) will be provided at a statewide level on a local exchange company specific basis.

   Effective on the first of January, April, July and October of each year the IC will update the interstate and intrastate jurisdictional report. The IC wil***l*** forward to the Company, to be received no later than thirty days after the first of each such month, a revised report for all services showing the intrastate percentage of use for the past three months ending the last day of December, March, June and September, respectively, for each service arranged for intrastate use. The revised report will serve as the basis for the next three months' billing and will be effective on the bill date for that service. If an IC does not supply an updated quarterly report, the Company will assume the percentage interstate usage to be the same PIU as provided in the last quarterly report accepted by the Company. If an audit has been completed and an updated quarterly report has not been submitted subsequent to the audit, the Company will assume the PIU factors to be the most recent audited results. For those cases in which quarterly reports have never been received from the IC, the Company will assume the PIU factors to be the most recent audit results or to be the same as those provided in the order for service if no audit has been performed.

5. When mixed interstate and intrastate Special Access (a.k.a. BellSouth SPA) service is provided, the jurisdiction will be determined as follows. (T)

   - If the IC's estimate of the interstate traffic on the service involved constitutes ten percent or less of the total traffic on that service, the service will be provided in accordance with the applicable rules and regulations of this Tariff.
   - If the IC's estimate of the interstate traffic on the service involved constitutes more than ten percent of the total traffic on that service, the service will be provided in accordance with the applicable rules and regulations of the BellSouth Telecommunications, Inc. Tariff FCC No. 1.

   The IC shall keep records from which the percentage of interstate and intrastate use was estimated and upon request of the Company make the records available for inspection as reasonably necessary for purposes of verification of the percentages. The IC shall supply the data within thirty days of the Company request.

B. Jurisdictional Report Verification

1. When an IC provides a projected interstate usage percent as set forth in A. preceding, or when a billing dispute arises or a regulatory commission questions the projected interstate percentage for BellSouth SWA, the Company may, by written request, require the IC to provide the data the IC used to determine the projected interstate percentage. ***In the case of a third-party provider of CCS7 service to Third Party Customers as described in A. preceding, the data will include the data provided by the Third Party Customers.*** This written request will be considered the initiation of the audit. The IC shall supply the data to an independent auditor within thirty days of the Company request. The IC shall keep records of call detail from which the percentage of interstate and intrastate use can be ascertained as set forth in C. following and upon request of the Company make the records available for inspection at an agreed upon location during normal business hours as reasonably necessary for purposes of verification of the percentages. The Company will audit data from one quarter unless a longer period is requested by the IC and agreed to by the Company. Changes to the reported PIU will not be made for the test period. If the IC does not provide the requested data to the Company or independent auditor within (30) days of the notice of audit, the IC will be in violation of this Tariff and subject to E2.1.8 ***of this Tariff***. (C)

Note 1: Except where indicated herein, references to BellSouth SWA FGs will also include the applicable BellSouth SWA Basic Serving Arrangement as detailed in the matrix in E6.1.3.A. ***of this Tariff*** (e.g., the term BellSouth SWA FGA represents both BellSouth SWA FGA and BellSouth SWA LSBSA) (T)

E2. GENERAL REGULATIONS

E2.3 Obligations of the IC (Cont'd)

E2.3.14 Jurisdictional Report Requirements[1] (Cont'd)

B. Jurisdictional Report Verification (Cont'd)

2. For ***BellSouth SWA*** service, verification audits may be conducted no more frequently than once per year except in extreme circumstances. The Company and IC will attempt to limit the audit to a reasonable time to effectively complete the audit. The Company and IC shall respond promptly to requests generated during the audit to ensure timely completion of the audit. (T)

   The Company will work cooperatively with other local exchange companies to develop joint audits of an IC in an effort to limit an IC's total state PIU audit to one per year.

3. Audits may be conducted by: (a) an independent auditor under contract to the Company; (b) a mutually agreed upon independent auditor; or (c) an independent auditor selected and paid for by the IC. If the IC selects option (c), where it pays for its own independent audit, the selected auditor must certify that the audit was performed following FCC procedures for measuring interstate and intrastate traffic as established by Commission Orders, and provide to the Company a report with supporting documentation to verify such procedures.

4. If a billing dispute arises or a regulatory commission questions the projected interstate percentage for Special Access ***(a.k.a. BellSouth SPA)*** service, the Company will ask the IC to provide the data the IC uses to determine the projected interstate percentage. The IC shall supply the data to an independent auditor within thirty days of the Company request. The IC shall keep records from which the percentage was determined and upon request of the Company make the records available for inspection as reasonably necessary for purposes of verification of the percentages. (T)

C. Maintenance of IC Records

1. The IC, Reseller and AOS provider shall retain for a minimum of six months, call detail records, that substantiate the percentage data provided to the Company as set forth in A. preceding for ***BellSouth SWA*** service. Such records shall consist of a. and b. (if applicable,) following: (T)

   a. All call detail records, such as workpapers and/or backup documentation (including paper, magnetic tapes, or any form of records for billed IC traffic call information including call terminating address (i.e., called number), the call duration, all originating and terminating trunk groups or access lines over which the call is routed, and the point at which the call enters the IC's network, and

   b. If the IC has a mechanized system in place that calculated its PIU, then a description of that system and the methodology used to calculate the PIU must be furnished and any other pertinent information (such as but not limited to flowcharts, source code, etc.) relating to such system must also be made available.

Note 1: Except where indicated herein, references to ***BellSouth SWA FGs*** will also include the applicable ***BellSouth SWA*** Basic Serving Arrangement as detailed in the matrix in E6.1.3.A. (e.g., the term ***BellSouth SWA*** FGA represents both ***BellSouth SWA*** FGA and ***BellSouth SWA*** LSBSA) (T)

E2. GENERAL REGULATIONS

E2.3 Obligations of the IC (Cont'd)

E2.3.14 Jurisdictional Report Requirements[1] (Cont'd)

C. (DELETED) (D)

D. Audit Results for ***BellSouth SWA*** (T)

1. Audit results will be furnished to the IC via Certified U.S. Mail (return receipt requested.) The Company will adjust the IC's PIU based upon the audit results. The PIU resulting from the audit shall be applied to the usage for the quarter the audit was completed, the usage for the quarter prior to completion of the audit, and to the usage for the two (2) quarters following the completion of the audit. After that time, the IC may report a revised PIU pursuant to A. preceding. If the revised PIU submitted by the IC represents a deviation, five percentage points or more, from the audited PIU, and that deviation is not due to identifiable reasons, the provision in B. preceding will be applied.
2. Both credit and debit adjustments will be made to the IC's interstate and intrastate access charges for the specified period to accurately reflect the usage for the IC's account consistent with Section E2.4.1 following.
3. If, as a result of an audit conducted by an independent auditor, under contract to the Company, an IC is found to have overstated the PIU by twenty percentage points or more, the Company shall require reimbursement from the IC for the cost of the audit. Such bill(s) shall be due and paid in immediately available funds thirty days from receipt and shall carry a late payment penalty as set forth in E2.4.1 following.

E. Contested Audits

1. When a PIU audit is conducted by an independent auditor selected by the Company, the audit results will be furnished to the IC by Certified U.S. Mail (return receipt requested). The IC may contest the audit results based on substantive cause by providing written notification, by Certified U.S. Mail (return receipt requested), to the Company within thirty (30) calendar days from the date the audit report is furnished to the IC by Certified U.S. Mail. When a PIU audit is conducted by an independent auditor selected by the IC, the audit results will be furnished to the Company by Certified U.S. Mail (return receipt requested). The Company may contest the audit results by providing written notification, by Certified U.S. Mail (return receipt requested), to the IC within thirty (30) calendar days from the date the audit report is furnished to the Company by Certified U.S. Mail.
2. Contested audits may be resolved by a neutral arbitrator mutually agreed upon by the Company and the IC. Arbitration is an option provided in addition to the IC's existing right to file a complaint or legal action in a court of law or at the Commission for resolution of the dispute. The arbitration hearing will be conducted in a state or location within the Company operating territory where the IC maintains a principle or significant presence as mutually agreed upon by both parties, or a state and location within the Company operating territory that is mutually agreed upon by both parties. The arbitration proceeding shall be governed by the law (both statutory and case) of the state in which the arbitration hearing is held, including, but not limited to, the Uniform Arbitration Act, as adopted in that state. The arbitration shall determine the IC's PIU based on A. preceding.

Note 1: Except where indicated herein, references to ***BellSouth SWA FGs*** will also include the applicable ***BellSouth SWA*** Basic Serving Arrangement as detailed in the matrix in E6.1.3.A. (e.g., the term ***BellSouth SWA*** FGA represents both ***BellSouth SWA*** FGA and ***BellSouth SWA*** LSBSA). (T)

E2. GENERAL REGULATIONS

E2.3 Obligations of the IC (Cont'd)

E2.3.14 Jurisdictional Report Requirements[1] (Cont'd)

E. Contested Audits (Cont'd)

3. Prior to the arbitration hearing, each party shall notify the arbitrator of the PIU percentage which that party believes to be correct. The arbitrator, in deciding, may adopt the PIU percentage of either party or may adopt a PIU percentage different from those proposed by the parties. If the arbitrator adopts a PIU percentage proposed by one of the parties, the other party (whose PIU percentage was not adopted) shall pay all costs of the arbitration. If the arbitrator adopts a PIU percentage higher than either of the PIU percentages proposed by the parties, then the party proposing the lower PIU percentage shall pay all costs of the arbitration. If the arbitrator adopts a PIU percentage lower than either of the PIU percentages proposed by the parties, then the party proposing the higher PIU percentage shall pay all costs of the arbitration. If the arbitrator adopts a PIU percentage which falls between the two percentages adopted by the parties, then the parties shall each pay one-half of the arbitration costs.

4. Absent written notification, within the time frame noted preceding, the IC must comply with the provisions set forth in D. preceding. If the IC fails to comply with these provisions, the Company may refuse additional applications for service and/or refuse to complete any and all pending orders for service or may discontinue the provision of the services to the IC as specified in E2.1.8 preceding.

E2.3.15 Determination of Intrastate Charges for Mixed Interstate and Intrastate Access Service

A. When mixed interstate and intrastate Access Service is provided, all charges (i.e., nonrecurring, monthly and/or usage) including optional feature and Basic Service Element (BSE) charges, will be prorated between interstate and intrastate. The percentage as set forth in E2.3.14.A. preceding will serve as the basis for prorating the charges. The percentage of Access Service to be charged as intrastate is applied in the following manner:

1. For monthly and nonrecurring chargeable rate elements, multiply the percent intrastate use times the quantity of chargeable elements times the stated tariff rate per element.

2. For usage sensitive (i.e., access minutes and calls) chargeable rate elements, multiply the percent intrastate use times the actual use (i.e., measured or Company assumed average use) times the stated tariff rate.

The intrastate percentage will change as revised jurisdictional reports are submitted as set forth in E2.3.14 preceding.

E2.3.16 Sectionalization - Trouble Reporting

The IC will be responsible for reporting troubles, sectionalized to Company facilities and/or equipment. When troubles cannot be clearly sectionalized to the Company facilities and/or equipment, the Company will test cooperatively or independently to assist in trouble sectionalization.

Responsibility for payment of additional charges will apply as set forth in E13.3.1.

E2.3.17 Reserved for Future Use

E2.3.18 Reserved for Future Use

Note 1: Except where indicated herein, references to ***BellSouth SWA FGs*** will also include the applicable ***BellSouth SWA*** Basic Serving Arrangement as detailed in the matrix in E6.1.3.A. (e.g., the term ***BellSouth SWA*** FGA represents both ***BellSouth SWA*** FGA and ***BellSouth SWA*** LSBSA). (T)

E2. GENERAL REGULATIONS

E2.3 Obligations of the IC (Cont'd)

E2.3.19 800 Number Reporting

For ***BellSouth SWA 8XX Toll Free Dialing*** Ten Digit Screening service, the IC will be responsible for reporting to the Company or directly to the Service Management System 800 numbers that are in service in the Company serving area and the activation date of every 800 number assigned. (T)

Additionally, the provision of ***BellSouth SWA 8XX Toll Free Dialing*** Ten Digit Screening service, provided from Section E6. following, requires the IC's subscription to basic ***BellSouth 8XX Toll Free Dialing*** Number ***Administration*** service features found in Section E13. of this Tariff; or as an alternative, the provision of those features by other responsible organizations or through direct access by the IC to the Service Management System. (T)

E2.3.20 *BellSouth SWA* Service Credit (T)

A. For any IC that obtains approval and implements a service offering that competes with the Company's Area Plus* service, the Company will provide certain access charge reductions to the IC. To qualify for the access charge reduction, the IC's service offering must use dialing arrangements that employ the use of originating and terminating switched access and have distinct prices which are filed and approved by the Commission. The Company will deduct from the originated switched access charges for traffic originated pursuant to an IC's qualifying plan an amount equal to the terminating carrier common line access charges. (T)

The IC should report actual minutes of use to the Company for intraLATA minutes of use originated pursuant to the IC's service offering. This usage should be reported no later than forty-five days after the end of each quarter (i.e., February 14, May 15, August 14, and November 14) by ***BellSouth SWA FGA, BellSouth SWA FGB,*** or ***BellSouth SWA FGD***. The minutes of use will be trued-up on an annual basis.

All reported minutes of use are subject to audit no more than once a year. The IC shall maintain and retain for a minimum of one year, complete, detailed and accurate records of all reported minutes of use sufficient to allow the Company or auditor to determine the accuracy of the reported minutes of use. In the absence of such records, no credit will be due the IC. Any credit given for periods for which such records do not exist may be recovered by the Company by offsetting such credit against any such credit due the IC from the Company.

E2.3.21 Utilization of Alternative Access Providers

When the IC of record for an access service utilizes the service(s) of an alternative access provider, it will be the obligation of the IC to monitor the actions of the alternative access provider to insure that the IC's desired service interconnections and grades of service are maintained.

* Service Mark of BellSouth Corporation

E2. GENERAL REGULATIONS

E2.4 Payment Arrangements and Credit Allowances

E2.4.1 Payment of Rates, Charges and Deposits [1]

A. The Company will, in order to safeguard its interests, only require an IC which has a proven history of late payments to the Company or does not have established credit to make a deposit prior to or at any time after the provision of a service to the IC to be held by the Company as a guarantee of the payment of rates and charges.

The Company will notify the customer of a deposit requirement by Certified Mail or Overnight Delivery. The customer will be required to make payment of such deposit prior to the provision of new service in those cases where the customer has not established credit with the Company, or otherwise within fifteen (15) calendar days of such notice for customers with existing services. Such notice period will start the day after the notice is rendered by Certified Mail or Overnight Delivery. (N)

No such deposit will be required of an IC which is a successor of a company which has established credit and has no history of late payments to the Company. Such deposit may not exceed the actual or estimated rates and charges for the service for a two month period. The fact that a deposit has been made in no way relieves the IC from complying with the Company's regulations as to the prompt payment of bills. At such time as the provision of the service to the IC is terminated, the amount of the deposit will be credited to the IC's account and any credit balance which may remain will be refunded.

Such a deposit will be refunded or credited to the IC's account when the IC has established credit or, in any event, after the IC has established a one-year prompt payment record at any time prior to the termination of the provision of the service to the IC. In case of a cash deposit, for the period the deposit is held by the Company, the IC will receive interest at the same percentage rate as that set forth in B.3. following. The rate will be compounded daily for the number of days from the date the IC's deposit is received by the Company to and including the date such deposit is credited to the IC's account or the date the deposit is refunded by the Company. Should a deposit be credited to the IC's account, as indicated preceding, no interest will accrue on the deposit from the date such deposit is credited to the IC's account.

B. The Company shall bill on a current basis all charges incurred by and credits due to the IC under this Tariff attributable to services including, but not limited to maintenance of service as set forth in E13.3.1.C. following, established or discontinued during the preceding billing period. In addition, the Company shall bill in advance charges for all services to be provided during the ensuing billing period except for charges associated with service usage, and for the Federal Government, which will be billed in arrears. The bill day (i.e., the billing date of a bill for an End User or IC for Access Service under this Tariff), the period of service each bill covers and the payment due date will be as follows:

1. For services provided under this Tariff that are billed directly to the End User, the Company will establish a bill day each month for each end user account. The bill will cover charges applicable to the End User for the ensuing billing period, except for the Federal Government which will be billed in arrears. Any known unbilled charges for prior periods and any known unbilled adjustments for prior periods for the charges applicable to the End User will be applied to this bill. Such bills are due when rendered.
2. For services provided under this Tariff that are billed directly to the IC, the Company will establish a bill day each month for each IC account. The bill will cover nonusage sensitive service charges for the ensuing billing period for which the bill is rendered, any known unbilled nonusage sensitive charges for prior periods and unbilled usage charges for the period after the last bill day thru the current bill day. Any known unbilled usage charges for prior periods and any known unbilled adjustments will be applied to this bill. Payment for such bills is due as set forth in 3. following. If payment is not received by the payment due date, as set forth in 3. following in immediately available funds, a late payment penalty will apply as set forth in 3. following.

Note 1: Except where indicated herein, references to BellSouth SWA FGs will also include the applicable BellSouth SWA Basic Serving Arrangement as detailed in the matrix of E6.1.3.A. (e.g., the term BellSouth SWA FGA represents both BellSouth SWA FGA and BellSouth SWA LSBSA).

All BellSouth marks contained herein and as set forth in the trademarks and servicemarks section of this Tariff are owned by BellSouth Intellectual Property Corporation.

E2. GENERAL REGULATIONS

E2.4 Payment Arrangements and Credit Allowances (Cont'd)

E2.4.1 Payment of Rates, Charges and Deposits[1] (Cont'd)

B. (Cont'd)

3. All bills dated as set forth in 2. preceding for services provided to the IC by the Company are due on the payment due date. The payment due date is the date which is thirty-one days after the bill day or by the next bill date (i.e., same date in the following month as the bill date) whichever is the shortest interval, except as provided herein, and are payable in immediately available funds. If such payment due date would cause payment to be due on a Saturday, Sunday or Holiday (i.e., New Year's Day, Independence Day, Labor Day, Thanksgiving Day, Christmas Day, and a day when Washington's Birthday, Memorial Day or Columbus Day is legally observed), payment for such bills will be due from the IC as follows:

   If such payment due date falls on a Sunday or on a Holiday which is observed on a Monday, the payment due date shall be the first non-Holiday day following such Sunday or Holiday. If such payment due date falls on a Saturday or on a Holiday which is observed on Tuesday, Wednesday, Thursday, or Friday, the payment due date shall be the last non-Holiday day preceding such Saturday or Holiday.

   Further, if any portion of the payment is received by the Company after the payment due date as set forth preceding, or if any portion of the payment is received by the Company in funds which are not immediately available to the Company, then a late payment penalty may be due to the Company. The late payment penalty shall be the portion of the payment not received by the payment due date times a late factor. The late factor shall not exceed the rate of one and one-half percent per month.

4. In the event of a billing dispute, the IC must submit a documented claim for the disputed amount. If the dispute is submitted on or before the payment due date or within ninety days after the payment due date and the disputed amount is paid prior to resolution of the dispute, any interest credits due the IC upon resolution of the dispute shall be calculated from the date of the overpayment to the resolution date. If the dispute is submitted more than ninety days after the payment due date and the disputed amount is paid prior to resolution of the dispute, any interest credits due the IC upon resolution of the dispute shall be calculated from the dispute date or the date the payment is made, whichever occurs later, to the resolution date. The Company will resolve the dispute and assess interest credits or late payment penalties to the IC as follows:

   - If the dispute is resolved in favor of the Company and the IC has paid the disputed amount on or before the payment due date, no credits or late payment penalties will apply to the disputed amount.
   - If the dispute is resolved in favor of the Company and the IC has withheld the disputed amount, any payments withheld pending settlement of the dispute shall be subject to the late payment penalty.
   - If the dispute is resolved in favor of the IC and the IC has withheld the disputed amount, no credits or late payment penalties will apply to the disputed amount.
   - If the dispute is resolved in favor of the IC and the IC has paid the disputed amount, the IC will receive a credit from the Company for the disputed amount times a penalty factor as set forth preceding. The penalty factor shall not exceed the rate of one and one-half percent per month.

If an IC's traffic terminates to an end office via an alternative Tandem Service Provider (TSP), any terminating usage dispute for that end office must identify the quantity of MOUs the IC's records indicate to be terminated via an alternative TSP.

Upon receipt of the dispute involving usage terminated via an alternative TSP, the Company will verify that the disputed bill accurately represents the information provided to the Company pursuant to E6.6.5 following, within five days of receipt of a dispute notification.

If the billing agrees with the billing data received pursuant to E6.6.5 following, the Company will refer the dispute to the entity providing the billing date information within sixteen days from the date the dispute was received.

The provider of the billing data information will investigate the claim and reply to the Company within fifteen days of the referral.

Note 1: Except where indicated herein, references to ***BellSouth SWA FGs*** will also include the applicable ***BellSouth SWA*** Basic Serving Arrangement as detailed in the matrix of E6.1.3.A. (e.g., the term ***BellSouth SWA*** FGA represents both ***BellSouth SWA*** FGA and ***BellSouth SWA*** LSBSA). (T)

E2. GENERAL REGULATIONS

E2.4 Payment Arrangements and Credit Allowances (Cont'd)

E2.4.1 Payment of Rates, Charges and Deposits[1] (Cont'd)

B. (Cont'd)

The provider of the billing data information, the IC and the Company will work cooperatively to resolve any remaining discrepancies.

If the entity providing the billing data information fails to cooperate with the Company to resolve billing disputes involving usage billed based on the billing data information received, the Company may refuse to accept future billing data information and bill the full terminating charges for all usage to the alternative TSP.

The terms and conditions in E2.4.1.B.3. preceding still apply except for the following:

- If the Company accurately billed the usage as contained in the billing data information provided to it, the Company will not be liable for any interest due the IC for overpayment if the dispute is resolved in the IC's favor.

Note 1: Except where indicated herein, references to ***BellSouth SWA FGs*** will also include the applicable ***BellSouth SWA*** Basic Serving Arrangement as detailed in the matrix of E6.1.3.A. (e.g., the term ***BellSouth SWA*** FGA represents both ***BellSouth SWA*** FGA and ***BellSouth SWA*** LSBSA). (T)

E2. GENERAL REGULATIONS

E2.4 Payment Arrangements and Credit Allowances (Cont'd)

E2.4.1 Payment of Rates, Charges and Deposits[1] (Cont'd)

C. Adjustments for the quantities of services established or discontinued in any billing period beyond the minimum period set forth for services in other sections of this Tariff will be prorated based on the number of days the IC had service during the billing period times one-thirtieth (1/30th) the monthly rate. Billing for service begins on the day following the date of installation and shall accrue through and include the day service is discontinued. The Company will, upon request and if available, furnish such detailed information as may reasonably be required for verification of any bill.

D. When a rate as set forth in this Tariff is shown to more than two decimal places, the charges will be determined using the rate shown. The resulting amount will then be rounded to the nearest penny (i.e., rounded to two decimal places).

E. When more than one copy of an IC bill for services provided under the provisions of this Tariff is furnished to the IC, an additional charge applies for each additional copy of the bill as set forth in E13.3.6 following.

F. The dispute date is the date the IC presents sufficient documentation to support the claim. Sufficient documentation consists of the following information, where such information is relevant to the dispute and reasonably available to the IC:

1. Special Access ***(a.k.a. BellSouth SPA)*** (T)
   a. The nature of the dispute (i.e., incorrect rate, incorrect circuit type etc.), including the basis for the IC's belief that the bill is incorrect.
   b. The billing account number(s) assigned by the Company.
   c. The amount of money in dispute.
   d. The date of the bill in dispute.
2. ***BellSouth SWA*** (Non-Usage) (T)
   a. The nature of the dispute (i.e., incorrect rate etc.), including the basis for the IC's belief that the bill is incorrect.
   b. The billing account number(s) assigned by the Company.
   c. The amount of money in dispute.
   d. The date of the bill in dispute.
3. ***BellSouth SWA*** (Usage) (T)
   a. The nature of the dispute (i.e., incorrect rate, incorrect minutes of use, etc.), including the basis for the IC's belief that the bill is incorrect.
   b. The type of usage (i.e., originating or terminating).
   c. The Company end office where the minutes of use originated or terminated (if applicable).
   d. The number of minutes in dispute.
   e. The billing account number(s) assigned by the Company.
   f. The amount of money in dispute.
   g. The date of the bill.

G. The Company and the IC shall work cooperatively to resolve the dispute.

If additional information from the IC would assist in resolving the dispute, the IC may be requested to provide additional information relevant to the dispute and reasonably available to the IC. This data may include, but is not limited to summarized usage data by time of day. The request for such additional information shall not affect the dispute date established pursuant to E2.4.1.F. preceding.

Note 1: Except where indicated herein, references to ***BellSouth SWA FGs*** will also include the applicable ***BellSouth SWA*** Basic Serving Arrangement as detailed in the matrix of E6.1.3.A. (e.g., the term ***BellSouth SWA*** FGA represents both ***BellSouth SWA*** FGA and ***BellSouth SWA*** LSBSA). (T)

E2. GENERAL REGULATIONS

E2.4 Payment Arrangements and Credit Allowances (Cont'd)

E2.4.1 Payment of Rates, Charges and Deposits[1] (Cont'd)

H. For purposes of E2.4.1.B.4., the resolution date is the date on which the Company completes the investigation of the dispute, and the Company's service representative notifies the IC of the disposition and notes the IC's account or when the Company forwards the amount of credit to the IC, depending upon IC preference.

I. At the option of the IC or end user, all nonrecurring charges associated with a Standard or Negotiated Interval Access Order may be billed over a three month period subject to the following:

- Fifty percent of the total nonrecurring charges will be billed in the first monthly billing period after the charges are incurred, and twenty-five percent of the total nonrecurring charges plus an Extended Billing Plan Charge will be billed in each of the following two monthly billing periods.
- The Extended Billing Plan Charge is calculated at a rate of one percent per month or twelve percent annually, on the unbilled balance of the nonrecurring charges.
- The IC or end user must request extended billing on or before the Application Date as set forth in E5.1.2 following for a Standard or Negotiated Interval Access Order.
- If the IC or end user disconnects service before the expiration of the plan period, all unbilled charges plus the Extended Billing Plan Charge, if applicable, will be included in the final bill rendered.
- This payment arrangement is not available for Daily Program Audio (a.k.a. BellSouth SPA Program Audio). (T)
- If the IC or end user fails to make any of the payments on the payment due date as set forth in B.1. preceding, these late payment charges specified in B.3. preceding will apply.

J. Effective October 1, 2001, a monthly recurring surcharge is applicable to each retail customer's total telecommunications bill in order to support South Carolina's Universal Service Fund. The surcharge will be assessed in accordance with orders issued by the Public Service Commission of South Carolina. (N)

E2.4.2 Minimum Periods

A. The minimum periods for which services are provided and for which rates and charges are applicable are set forth in E2.4.9, Sections E5., E6. and E7. following, for BellSouth SWA and Special Access (a.k.a. BellSouth SPA) services; in Sections E8. and E9. following, for Billing and Collection Services and BellSouth Directory Assistance Access service; in Section E14. following for Special Construction; and, in Section E29. for Optical Transport Access Service. (T)

Note 1: Except where indicated herein, references to BellSouth SWA FGs will also include the applicable BellSouth SWA Basic Serving Arrangement as detailed in the matrix of E6.1.3.A. (e.g., the term BellSouth SWA FGA represents both BellSouth SWA FGA and BellSouth SWA LSBSA). (T)

All BellSouth marks contained herein and as set forth in the trademarks and service marks section of the BellSouth Tariffs are owned by BellSouth Intellectual Property Corporation.

E2. GENERAL REGULATIONS

E2.4 Payment Arrangements and Credit Allowances (Cont'd)

E2.4.2 Minimum Periods (Cont'd)

B. The minimum period for which service is provided and for which rates and charges are applicable for a Specialized Service or Arrangement provided on an individual case basis, as set forth in E12. ***of this Tariff*** is one month unless a different minimum period is established with the individual case filing. (T)

C. When a service is discontinued prior to the expiration of the minimum period, charges are applicable whether the service is used or not as follows:

1. When a service with a one month minimum period is discontinued prior to the expiration of the minimum period, a one month charge will apply at the rate level in effect at the time service is discontinued.
2. When a service with a minimum period greater than one month is discontinued prior to the expiration of the minimum period, the applicable charge will be the lesser of (1) the Company's total nonrecoverable costs less the net salvage value for the discontinued service or (2) the total monthly charges, at the rate level in effect at the time service is discontinued, for the remainder of the minimum period.

E2.4.3 Cancellation of an Order for Service

Provisions for the cancellation of an Access Order for BellSouth SWA or Special Access (a.k.a. BellSouth SPA) services are set forth in E5.2.3 ***of this Tariff.*** (T)

E2.4.4 Credit Allowance for Service Interruptions

A. General

A service is interrupted when it becomes unusable to the IC or End User because of a failure of a facility component used to furnish service under this Tariff, or in the event that the protective controls applied by the Company result in the complete loss of service by the IC or End User as set forth in E6.5.1 ***of this Tariff.*** An interruption period starts when an inoperative service is reported to the Company and ends when the service is operative. (T)

B. When A Credit Allowance Applies

In case of an interruption to any service, allowance for the period of interruption, if not due to the negligence of the IC or End User, shall be as follows:

1. For BellSouth SWA Dedicated Interoffice Channels, Channelization Equipment, Switched Local Channels, ***Dedicated End Office Trunk Port Service, Dedicated Tandem Trunk Port,*** Special Access (a.k.a. BellSouth SPA) services, and for Fast Packet Access services, no credit shall be allowed for an interruption of less than thirty minutes. The IC or end user shall be credited for an interruption of thirty minutes or more at the rate of 1/1440 of the monthly charges for the facility or service for each period of thirty minutes or major fraction thereof that the interruption continues. (C)

   The monthly charges used to determine the credit shall be as follows:

   a. The monthly charge shall be the total of all the monthly rate element charges associated with the service:

      (1) For BellSouth SWA Transport: Switched Local Channel, BellSouth SWA Dedicated Interoffice Channel, ***Dedicated End Office Trunk Port Service, Dedicated Tandem Trunk Port Service,*** Channelization Equipment (if applicable), and any Optional Features and Functions. (C)

      (2) For Special Access (a.k.a. BellSouth SPA) two-point services: two Local Channels, Interoffice Channel and Optional Features and Functions.

E2. GENERAL REGULATIONS

E2.4 Payment Arrangements and Credit Allowances (Cont'd)

E2.4.4 Credit Allowance for Service Interruptions (Cont'd)

B. When A Credit Allowance Applies (Cont'd)

1. (Cont'd)

   c. For Special Access (a.k.a. BellSouth SPA) channelized services, the monthly charge shall be the total of all the monthly rate element charges associated with that portion of the service that is inoperative. When the facility which is channelized or the Basic Channelization System itself is inoperative, the monthly charge shall be the total of all the monthly rate element charges associated with the service (i.e., the local channel, interoffice channel, and any optional features and functions, including the Basic Channelization System on the facility to the Hub, and the local channels, Central Office Channel Interfaces, interoffice channel, and any optional features and functions on the individual services from the Hub). When the service which rides a channel of the channelized facility is inoperative, the monthly charge shall be the total of all the monthly rate element charges associated with that portion of the service from the Hub to an IC or end user premises (i.e., local channel, interoffice channel, Central Office Channel Interfaces, and optional features and functions).

   d. For BellSouth SWA channelized services, the monthly charge shall be the total of all monthly rate element charges associated with that portion of the service that is inoperative. When the facility which is channelized or the Basic Channelization System itself is inoperative, the monthly charge shall be the total of all the monthly rate element charges associated with the service (***e.g.,*** the Switched Local Channel, Switched Interoffice Channels, Channelization Equipment, including the Basic Channelization System on the facility to the Hub, if applicable). (T)

2. For Program Audio (a.k.a. BellSouth SPA Program Audio) and Video (a.k.a. BellSouth SPA Video) services, no credit shall be allowed for an interruption of less than thirty seconds. The IC shall be credited for an interruption of thirty seconds or more as follows:

   a. For two-point services, when monthly rates are applicable, the credit shall be at the rate of 1/8640 of the monthly charges for the service for each period of five minutes or major fraction thereof that the interruption continues.

   b. For multipoint services, when monthly rates are applicable, the credit shall be at the rate of 1/8640 of the monthly charges for each connecting channel and associated access connection, special transport, special access (a.k.a. BellSouth SPA) line and optional features and functions that is inoperative for each period of five minutes or major fraction thereof that the interruption continues.

   c. For multipoint services, the credit for the monthly charges includes the charges for the distribution amplifier only when the distribution amplifier is inoperative.

   d. When two or more interruptions occur during a period of five consecutive minutes, such multiple interruptions shall be considered as one interruption.

3. For BellSouth SWA service usage sensitive rate elements, no credit shall be allowed for an interruption of less than twenty-four hours. The IC or end user shall be credited for an interruption of twenty-four hours or more at the rate applicable to the service involved, for each period of twenty-four hours or major fraction thereof that the interruption continues. In the case of service billed based upon actual usage, no credit allowance is applicable.

4. The credit allowance(s) for an interruption or for a series of interruptions shall not exceed the sum of the monthly rates or the assumed minutes of use charge for the service interrupted in any one monthly billing period.

E2. GENERAL REGULATIONS

E2.4 Payment Arrangements and Credit Allowances (Cont'd)

E2.4.4 Credit Allowance for Service Interruptions (Cont'd)

B. When A Credit Allowance Applies (Cont'd)

5. For certain Special Access (a.k.a. BellSouth SPA) services (Wideband Digital, WD1-4; Digital Data Access (a.k.a. BellSouth SPA DS0 Digital Data), DA1-4; and High Capacity (a.k.a. BellSouth SPA High Capacity), HC1), any period during which the error performance is below that specified for the service will be considered as an interruption. (T)
6. Service interruptions for Specialized Service or Arrangements provided under the provisions of Section E12. following shall be administered in the same manner as those set forth in this section unless other regulations are specified with the individual case filing.
7. For BellSouth Wavelength service, a credit for a service interruption of thirty minutes or more per occasion shall be 100 percent of the monthly charges for the BellSouth Wavelength service. A customer must report the outage in order to receive service outage credit. The total credit received in any month shall not exceed the monthly rate for the service. (T)

C. When Credit Allowance Does Not Apply

No credit allowance will be made for:

1. Interruptions caused by the negligence of the IC, end user ***or the IC's authorized agent***. (C)
2. Interruptions of a service due to the failure of equipment or systems provided by the IC, end user or others.

All BellSouth marks contained herein and as set forth in the trademarks and servicemarks section of this Tariff are owned by BellSouth Intellectual Property Corporation.

E2. GENERAL REGULATIONS

E2.4 Payment Arrangements and Credit Allowances (Cont'd)

E2.4.4 Credit Allowance for Service Interruptions (Cont'd)

C. When Credit Allowance Does Not Apply (Cont'd)

3. Interruptions of a service during any period in which the Company is not afforded access to the premises where the service is terminated.
4. Interruptions of a service when the IC or end user has released that service to the Company for maintenance purposes, to make rearrangements, or for the implementation of an order for a change in the service during the time that was negotiated with the IC or End User prior to the release of that service. Thereafter, a credit allowance as set forth in B. preceding applies.
5. Interruptions of a service which continue because of the failure of the IC or End User to authorize replacement of any element of special construction, as set forth in E14 following. The period for which no credit allowance is made begins on the seventh day after the IC or End User receives the Company's written notification of the need for such replacement and ends on the day after receipt by the Company of the IC's or End User's written authorization for such replacement.
6. Periods when the IC or End User elects not to release the service for testing and/or repair and continues to use it on an impaired basis.
7. Periods of temporary discontinuance as set forth in E2.2.2 preceding.
8. An interruption or a group of interruptions, resulting from a common cause, for amounts less than one dollar.
9. Periods of interruption as set forth in E13.3 following.
10. **(DELETED)** (D)
11. **(DELETED)** (D)
12. **(DELETED)** (D)

D. Use of an Alternative Service Provided by the Company

Should the IC elect to use an alternative service provided by the Company during the period that a service is interrupted, the IC must pay the tariffed rates and charges for the alternative service used.

E. Temporary Surrender of a Service

In certain instances, the IC may be requested by the Company to surrender a service for purposes other than maintenance, testing or activity relating to a service order. If the IC consents, a credit allowance will be granted. The credit allowance will be 1/1440 of the monthly rate for each period of 30 minutes or fraction thereof that the service is surrendered. In no case will the credit allowance exceed the monthly rate for the service surrendered in any one monthly billing period.

E2.4.5 Reserved for Future Use

E2.4.6 Re-establishment of Service Following Fire, Flood or Other Occurrence

A. Nonrecurring Charges Do Not Apply

Charges do not apply for the re-establishment of service following a fire, flood or other occurrence attributed to an Act of God provided that:

1. The service is of the same type as was provided prior to the fire, flood or other occurrence.
2. The service is for the same IC or End User.
3. The service is at the same location on the same premises.

All BellSouth marks contained herein and as set forth in the trademarks and servicemarks section of this Tariff are owned by BellSouth Intellectual Property Corporation.

E2. GENERAL REGULATIONS

E2.4 Payment Arrangements and Credit Allowances (Cont'd)

E2.4.6 Re-establishment of Service Following Fire, Flood or Other Occurrence (Cont'd)

A. Nonrecurring Charges Do Not Apply (Cont'd)

4. The reestablishment of service begins within sixty days after Company service is available. (The sixty day period may be extended a reasonable period if the renovation of the original location on the premises affected is not practical within the allotted time period.)

B. Nonrecurring Charges Apply

Nonrecurring Charges apply for establishing service at a different location on the same premises or at a different premises pending reestablishment of service at the original location.

E2.4.7 Title or Ownership Rights

A. The payment of rates and charges by ICs or end users for the services offered under the provisions of this Tariff does not assign, confer or transfer title or ownership rights to proposals or facilities developed or utilized, respectively, by the Company in the provision of such services.

E2.4.8 Billing of Access Service Provided by Multiple Companies (T)

A. Feature Group A (FGA) Service[1] (T)

When a Feature Group A ***(or LSBSA)***[2] Switched Access Service is ordered by an IC or end user where one end of the Transport Element is in the Company's operating territory and the other end is in another Exchange Telephone Company's operating territory, the Exchange Telephone Company in whose territory the ***FGA dial-tone office*** is located will accept the order. In addition, the Exchange Telephone Company in whose territory the IC terminal location or end user ***serving wire center*** is located must also receive a copy of the order from the IC or end user. The Exchange Telephone Company that accepts the order will then determine the charges involved, arrange to provide the access service ordered and bill the charges in accordance with its Access Service Tariff. (C)

Upon agreement of the Exchange Telephone Companies involved in the provision of FGA service, the dedicated portion of FGA service (i.e., Switched Dedicated Interoffice Channel, Switched Local Channel and Channelization Equipment) will be billed in accordance with the provisions of B. and C. following. For non-dedicated portions of FGA service, including the Interconnection charge, the rates of the billing Company will apply. (N)

(M)

Note 1: Except where indicated herein, references to feature groups will also include the applicable Basic Serving Arrangement (BSA) as detailed in the martrix of E6.1.3.A. (e.g., the term FGA represents both FGA and Line Side Basic Service Arrangement (LSBSA)).

Note 2: Where LSBSA is provisioned with a DNAL, this sub-section, E2.4.8 shall also apply to the DNAL.

Material previously appearing on this page now appears on page(s) 13.0.1 of this section

E2. GENERAL REGULATIONS

E2.4 Payment Arrangements and Credit Allowances (Cont'd)

E2.4.8 Billing of Access Service Provided by Multiple Companies (Cont'd)

B. Single Bill Arrangements

1. General

If agreed to by the Exchange Telephone Companies involved in the provision of the service, a single bill will be provided for ***Special Access and*** FGB[1], FGC, FGD and the dedicated portions of FGA service. In the event that the Exchange Telephone Companies involved agree to change from one billing arrangement to another, the IC or End User will be notified at least thirty days prior to the effective date of the change. (C)

2. Ordering

The IC shall place its access service request with each Exchange Telephone Company involved in the provision of the service.

3. Rating and Billing of Service

The billing company will be as agreed to by the Exchange Telephone Companies involved in the provision of the service. The single bill arrangement may be provided under the following single bill alternatives if agreed to by such companies:

a. The billing company will bill and collect all appropriate charges in accordance with the regulations, rates and charges in its Access Service Tariff, or

b. The billing company will bill and collect all appropriate charges in accordance with the rates and charges in its access tariff, for the portion of the service it provides, and in accordance with the rates and charges of the access tariffs of the other Exchange Telephone Companies involved, for the portion of the service which they provide. The Interconnection charge of the end office Telephone Company will apply. The bill will separately identify each company's rates and charges, or

Note 1: Except where indicated herein, references to feature groups will also include the applicable Basic Serving Arrangement (BSA) as detailed in the martrix of E6.1.3.A. (e.g., the term FGA represents both FGA and Line Side Basic Service Arrangement (LSBSA)).

E2. GENERAL REGULATIONS

E2.4 Payment Arrangements and Credit Allowances (Cont'd)

E2.4.8 Billing of Access Service Provided by Multiple Companies (Cont'd)

B. Single Bill Arrangements (Cont'd)

3. Rating and Billing of Service (Cont'd)

c. The billing company will bill and collect all appropriate charges in accordance with the rates and charges in the access tariffs of the other involved Exchange Telephone Companies, as forwarded to it by such companies for the portion of the service they provide, and in accordance with the rates and charges in its own access tariff for the portion of the service it provides. The Interconnection charge of the End Office Telephone Company will apply. The bill will separately identify each company's rates and charges.

For b. and c. preceding, the charges billed for the portion of service provided by this Company are determined as set forth in C.3.a., b. and c. following. For nonrecurring charges, one-hundred percent of this Company's charge shall apply.

C. Multiple Bill Arrangements

1. General

Separate bills will be rendered by the Exchange Telephone Companies for Special Access and FGB[1], FGC, FGD and the dedicated portions of FGA access service if the administration of a single bill arrangement, as set forth in B. preceding, is not agreed upon by the companies involved. In the event that the Exchange Telephone Companies involved agree to change from one billing arrangement to another, the IC or End User will be notified at least thirty days prior to the effective date of such change.

2. Ordering

The IC shall place its access service request with each Exchange Telephone Company involved in the provision of the service.

3. Rating and Billing of Service

Each company will provide its portion of the access service based on the regulations, rates and charges contained in its Access Service Tariff, subject to the following rules, as appropriate: (T)

a. The charges billed by this Company for mileage sensitive rate elements, e.g., ***BellSouth SWA*** Transport, Special Access ***(a.k.a. BellSouth SPA)*** service Interoffice Channel Mileage, or ***BellSouth*** Directory Assistance ***Access*** Transport, are determined as follows: (T)

(1) The total mileage for the service is computed using the V&H Coordinate Method set forth in ***NATIONAL EXCHANGE CARRIER ASSOCIATION TARIFF F.C.C. NO. 4*** (NECA NO. 4).

(2) A billing factor is determined from NECA No. 4 directly.

(3) This Company's rates and charges are then multiplied by the appropriate quantity(ies) and the billing factor to obtain the charges for this Company.

An example of this methodology is shown in E2.4.8.C.4. following.

b. The application of nondistance sensitive rate elements varies according to the rate structure and the location of the facilities involved:

(1) When rates and charges are listed on a per point of termination basis, this Company's rates will be billed for the termination(s) within this Company's operating territory. (T)

Note 1: Except where indicated herein, references to ***BellSouth SWA FGs*** will also include the applicable ***BellSouth SWA*** Basic Serving Arrangement as detailed in the matrix of E7.1.3.A. (e.g., the term ***BellSouth SWA*** FGA represents both ***BellSouth SWA*** FGA and ***BellSouth SWA*** LSBSA).

E2. GENERAL REGULATIONS

E2.4 Payment Arrangements and Credit Allowances (Cont'd)

E2.4.8 Billing of Access Service Provided by Multiple Companies (Cont'd)

C. Multiple Bill Arrangements (Cont'd)

3. Rating and Billing of Service (Cont'd)

b. (Cont'd)

(2) When rates and charges are listed on a per unit basis, e.g., central office bridging or channelization, this Company's rates and charges will apply for units located in this Company's operating territory. ***For switched access common transport between a Company access tandem and an end office of another Company, fifty percent of this Company's Common Transport DS3 to DS1 Multiplexer rate, as set forth in E6.8.1 of this Tariff, and this Company's Directory Transport DS3 to DS1 Multiplexer rate, as set forth in E9.5.3 of this Tariff, shall apply.*** (C)

(3) When rates and charges are developed on an individual case basis, such rates will be developed for the portion of the service provided by this Company.

(4) When rates and charges are listed on a per service basis, this Company's rates and charges are allocated based upon the ratio of points on the special access (a.k.a. BellSouth SPA) circuit that a company owns, in relation to the total number of points on the circuit.

(5) For Special Access (a.k.a. BellSouth SPA) Interoffice Channels, fifty percent of this Company's rate will apply for each end of the Interoffice Channel that this Company provides.

For example:

If the interoffice channel fixed rate is $11.80, and this Company provides only one end of the interoffice channel, the rate would be fifty percent of $11.80, or $5.90. Likewise, fifty percent of this Company's nonrecurring charge would apply when this Company provides only one end of the Interoffice Channel.

If this Company does not provide either end of the Interoffice Channel, this Company's fixed rate for mileage between central offices and this Company's nonrecurring charges for Interoffice Channels shall not apply.

(6) For BellSouth SWA Dedicated Interoffice Channel Facility Termination rates, fifty percent of this Company's rate will apply for each end of the BellSouth SWA Dedicated Interoffice Channel that this Company provides.

For example:

If the BellSouth SWA Dedicated Interoffice Channel Facility Termination rate is $15.00, and this Company provides only one end of this BellSouth SWA Dedicated Interoffice Channel, the rate would be fifty percent of $15.00, or $7.50.

If this Company does not provide either end of the BellSouth SWA Dedicated Interoffice Channel, this Company's BellSouth SWA Dedicated Interoffice Channel Facility Termination rate shall not apply.

c. For nonrecurring charges, one-hundred percent of this Company's charge shall apply; except as specified in b.(5) preceding, provided, however, that for installation charges pursuant to E6.8.1 ***of this Tariff***, only fifty percent of this Company's installation charges will apply where, for trunks installations this Company owns neither the involved end office or access tandem, or for line side installations this Company does not own the Feature Group A dial tone office. (T)

E2. GENERAL REGULATIONS

E2.4 Payment Arrangements and Credit Allowances (Cont'd)

E2.4.8 Billing of Access Service Provided by Multiple Companies (Cont'd) (T)

C. Multiple Bill Arrangements (Cont'd) (C)

4. Multiple Bill Example[1] ***for Switched Transport Rate Elements*** (C)

a. Assume ***Switched Dedicated/Common Transport*** is ordered to an End Office in the operating territory of Company A. The IC premises is located in the operating territory of Company B. (C)

(1) Switched Dedicated Transport (N)

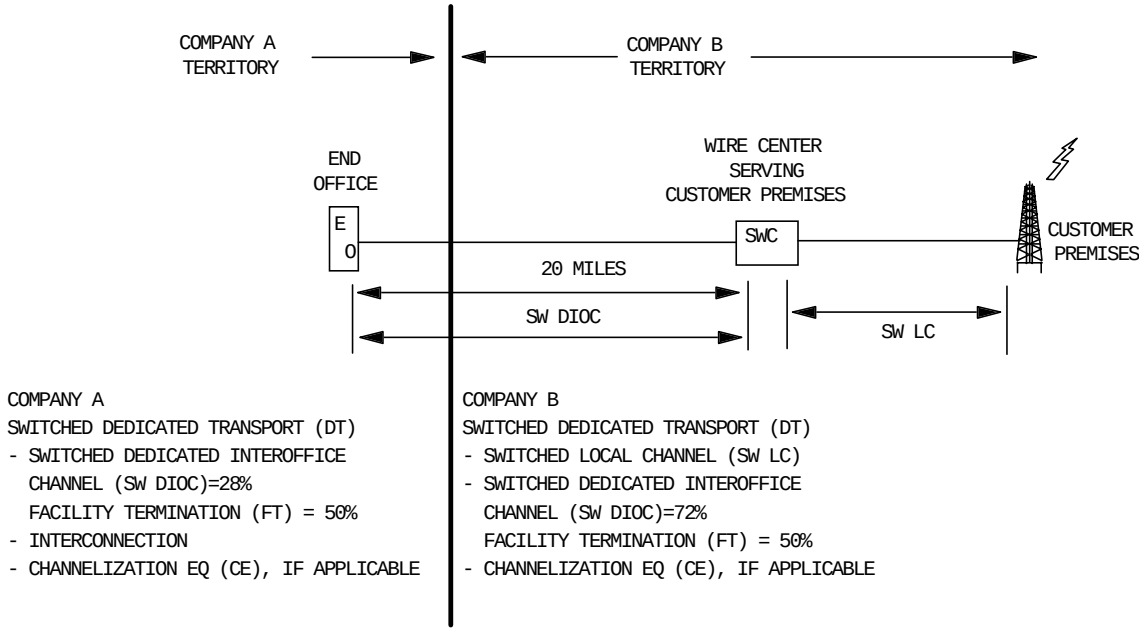

Assume 20 miles of Switched Dedicated Transport (DT); Assume 8,000 minutes of use; Assume billing factor from ***NECA*** No. 4 ***of 28% for*** Company A ***and 72% for*** Company B. (C)

COMPANY A - DT = $1.00 per mile (C)
FT = $25.00 per month
INTERC. = $.002 per mou

DT 20 mi x $1.00 x 28% = $ 5.60 (C)
FT $25.00 x 50% = $12.50
INTERC. $.002 x 8,000 mou = $16.00

Note 1: Rates used in each example are for example purposes only. (N)

E2. GENERAL REGULATIONS

E2.4 Payment Arrangements and Credit Allowances (Cont'd)

E2.4.8 Billing of Access Service Provided by Multiple Companies (Cont'd) (T)

C. Multiple Bill Arrangements (Cont'd) (C)

4. Multiple Bill Example[1] ***for Switched Transport Rate Elements*** (Cont'd) (C)

a. (Cont'd) (C)

COMPANY A SWITCHED TRANSPORT = $34.10 (C)

COMPANY B - ***DT = $ .50 per mile*** (C)

FT = $15.00 per month
SWLC = $10.00 per month

SWLC		***= $ 10.00***
FT	***$15.00 x 50%***	***= $ 7.50***
DT	***20 mi x $.50 x 72%***	***= $ 7.20***

(C)

COMPANY B SWITCHED TRANSPORT = $24.70 (C)

Note 1: Rates used in each example are for example purposes only. (N)

E2. GENERAL REGULATIONS

E2.4 Payment Arrangements and Credit Allowances (Cont'd)

E2.4.8 Billing of Access Service Provided by Multiple Companies (Cont'd)

C. Multiple Bill Arrangements (Cont'd)

4. Multiple Bill Example[1] for Switched Transport Rate Elements (Cont'd)

a. (Cont'd)

(2) Switched Common Transport (C)

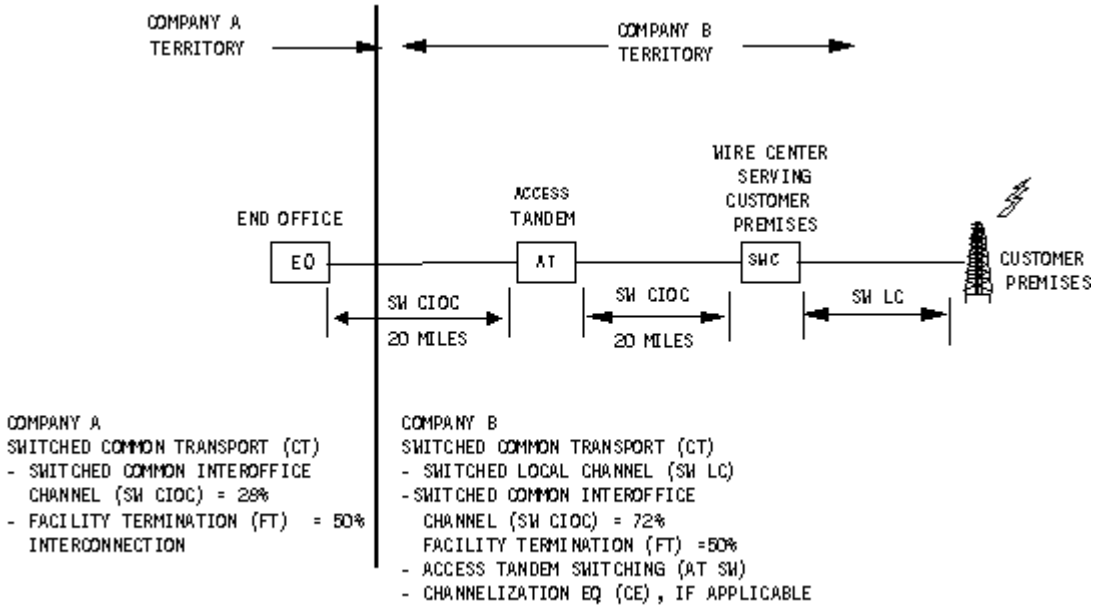

Assume 20 miles of Switched Common Transport (CT); ***20 miles of Switched Dedicated Transport (DT);*** and 8,000 minutes of use. ***Further,*** assume a billing factor from NECA 4 of 28% for Company A and 72% for Company B. (C)

COMPANY A - CT	=$.0001 per mou/per mile	
- ***CT*** FT	=$.0001 per mou	(C)
- ***Interconnection***	=$.002 per mou	(T)
- ***Interconnection*** $.002 x 8,000 mou	=$16.00	(T)
- CT 20 mi. x $.0001 x 8,000 mou x 28%	=$4.48	
- ***CT*** FT $.0001 x 8,000 mou x 50%	=$.40	(C)
COMPANY A SWITCHED TRANSPORT	=$20.88	

Note 1: Rates used in each example are for example purposes only ***and do not include multiplexing, tandem trunk ports and end office trunk ports.*** (C)

E2. GENERAL REGULATIONS

E2.4 Payment Arrangements and Credit Allowances (Cont'd)

E2.4.8 Billing of Access Service Provided by Multiple Companies (Cont'd)

C. Multiple Bill Arrangements (Cont'd)

4. Multiple Bill Example[1] for Switched Transport Rate Elements (Cont'd)

a. (Cont'd)

(2) Switched Common Transport (Cont'd) (T)

COMPANY B - CT	= $.0003 per mou/per mile	
CT FT	=$.0001 per mou	(C)
AT Switching	=$.00005 per mou	
SWLC	=$10.00	
DT	=$2.00 per mile	(N)
DT FT	=$30.00 per month	(N)
SWLC	=$10.00	
AT SW $.00005 x $8.000 mou	=$.40	
CT 20 mi. x $.0001 x 8.000 mou x 72%	=$11.52	
CT FT $.0001 x 8.000 mou x 50%	=$.40	(C)
DT 20 mi. x $2.00	=$40.00	(N)
DT FT	=$30.00	(N)
COMPANY B SWITCHED TRANSPORT	=$92.32	(C)

Note 1: Rates used in each example are for example purposes only ***and do not include multiplexing, tandem trunk ports and end office trunk ports.*** (C)

E2. GENERAL REGULATIONS

E2.4 Payment Arrangements and Credit Allowances (Cont'd)

E2.4.9 Optional Payment Plan

A. Channel Services Payment Plan

1. General

   a. The regulations specified herein are applicable to Special Access ***(a.k.a. BellSouth SPA)*** services as indicated in Section E7. of this Tariff for channel service (T)

   b. Facilities furnished under the Channel Services Payment Plan (CSPP) are subject to all general regulations applicable to the provision of service by the Company as stated elsewhere in this Tariff except as noted herein.

   c. The CSPP is a payment plan which allows customers to pay fixed rates for channel equipment and/or facilities over variable contractual payment periods. A specific monthly rate applies for the duration of each period, as follows or as specified otherwise in this Tariff.

      (1) 36 month Term Payment Plan - payment periods may be selected from 24 months to 48 months in length, at 36 month rates and charges.

      (2) 60 month Term Payment Plan - payment periods may be selected from 49 months to 72 months in length, at 60 month rates and charges.

      (3) 84 month Term Payment Plan - payment periods may be selected from 73 months to 96 months in length, at 84 month rates and charges.

   d. When the customer extends service beyond a ninety-six month service period, the eighty-four month Term Payment Plan (or the longest available tariffed service period) rates will apply.

   e. When the customer orders service to be provided under a CSPP arrangement, the customer must designate to the Company the payment plan and the service period desired, e.g. 84 month Term Payment Plan and 96 months.

2. Application of Rates and Charges

   a. Rates stabilized under a CSPP arrangement are exempt from Company initiated increases, however, decreases for any rate element will automatically flow through to the customer. Effective with this Tariff, customers under a CSPP arrangement will be billed the lower of their existing CSPP rates or the current CSPP rates for their service arrangement.

   b. In the event that all or any part of a service is disconnected at customer request prior to expiration of any selected payment period of greater than one month's duration, the customer will be required to pay a termination charge as stated in that service's section of this Tariff.

   c. When customers renew or change the length of their payment period, the rates applicable for the new period are those currently in effect at the time of the renewal or change in the length of the payment period.

   d. Recurring rates and nonrecurring charges apply according to the appropriate schedules for services offered as associated items to Channel Services, and are filed elsewhere in this Tariff.

   e. Customer requests for inside moves of service will not affect the contract period.

   f. A change in jurisdiction will not constitute a disconnect of service provided the new CSPP arrangement is a minimum twenty-four month service period or equals/exceeds the remaining service period, whichever is greater, provided the new CSPP arrangement is for the same customer at the same location for the same capacity service.

E2. GENERAL REGULATIONS

E2.4 Payment Arrangements and Credit Allowances (Cont'd)

E2.4.9 Optional Payment Plan (Cont'd)

A. Channel Services Payment Plan (Cont'd)

3. Additions

   a. Additions of services or rate elements for activating spare or unused capacities of a service under a CSPP arrangement will be considered part of the existing CSPP arrangement.

   b. Additions of services or rate elements, i.e. new local channels, interoffice channels, etc., other than for activating spare or unused capacities, must be under a new CSPP arrangement at rates and charges as specified in 2. preceding.

   c. Termination charges for premature disconnection of added contractual services will apply as set forth under Disconnects as stated in 4. following.

   d. Additions under CSPP are exempt from Company-initiated rate changes for all payment periods longer than one month. However, decreases for any rate element will automatically flow through to the customer.

   e. Nonrecurring charges will apply when new channel equipment and/or facilities are added to an existing customer network.

4. Disconnects

   a. When a service or rate element, included under a CSPP arrangement, is disconnected prior to expiration of the selected service period, termination liability charges apply as set forth in the rate regulations in this Tariff for such service. Remaining services or rate elements will not be affected by such disconnections.

   b. When a tariffed service under a CSPP arrangement is disconnected prior to the expiration of a selected service period as a result of a change of Tariff jurisdiction and/or a customer requested change to a higher order of a separately tariffed service, termination liability charges will not apply when:

   - the completed service period is twelve months, or twenty-five percent of the length of the originally selected CSPP service period, whichever is greater, and

   - the service period of the new CSPP arrangement for the higher order of service is a minimum twenty-four month service period or equals/exceeds the remaining service period of the disconnected arrangement, whichever is greater, and

   - the service orders to install the higher order of service and disconnect the old service are related together and there is no lapse in service between installation of the higher order of service and disconnection of the existing service, and (T)

   - the service orders are for the same customer at the same location

   For the purposes of determining a higher order of service, the following ranking will be used (Analog Voice Grade ***(a.k.a. BellSouth SPA DS0 VG)*** = lowest, DS1 High Capacity ***(a.k.a. BellSouth SPA DS1)*** = Highest): (T) (T)

   Analog Voice Grade ***(a.k.a. BellSouth SPA DS0 VG)*** Services (T)

   DS0 ***(a.k.a. BellSouth SPA DS0 VG)*** Services

   DS1 High Capacity ***(a.k.a. BellSouth SPA DS1)*** Service

E2. GENERAL REGULATIONS

E2.4 Payment Arrangements and Credit Allowances (Cont'd)

E2.4.9 Optional Payment Plan (Cont'd)

A. Channel Services Payment Plan (Cont'd)

5. Moves of Equipment (M)

   a. The appropriate nonrecurring charges for inside moves are applicable as specified in this Tariff. This type movement will not affect the CSPP payment period. (M)

   b. Customer requests for moves of service(s) under CSPP, other than inside moves, will be subject to the conditions stated in ***11.*** following. (T)(M)

6. Requests for Changes in Length of Optional Payment Period (M)

   a. Subsequent to the establishment of a contract with a CSPP period, and prior to the completion of that period, the existing payment period may be replaced by: (M)

      (1) A currently offered payment period at the current rates, with a length equal to or longer than the time remaining in the existing service agreement, subject to the following conditions: (M)

         - No credit will be given for payments made during the formerly selected period. (M)

         - The new payment period begins with the ***new CSPP effective*** date. (T)(M)

         - No termination charge applies for the remaining portion of the former payment period. (M)

         - Nonrecurring charges will not be reapplied. (M)

      (2) A currently offered payment period at the current rates, with a length shorter than the time remaining in the existing service agreement, subject to the following conditions: (M)

         - No credit will be given for payments made during the formerly selected period. (M)

         - The new payment period begins with the ***new CSPP effective*** date. (T)(M)

         - A termination charge applies for the remaining portion of former payment period. (M)

         - Nonrecurring charges will not be reapplied. (M)

Material appearing on this page previously appeared on page(s) 13.2 of this section

E2. GENERAL REGULATIONS

E2.4 Payment Arrangements and Credit Allowances (Cont'd)

E2.4.9 Optional Payment Plan (Cont'd)

A. Channel Services Payment Plan (Cont'd)

7. Renewal Options

a. The customer has the following renewal options:

(1) Prior to completion of the current payment period, any period available under the CSPP may be selected at the rates in effect for new customers at the time of the renewal. The customer will be charged the current rate for the newly selected payment period, commencing the day following completion of the prior payment period.

(2) Service may be continued on a month-to-month basis at the current rate for the one-month payment period, unless otherwise specified in this Tariff. The customer has no additional service commitment and, consequently, when service is terminated will not be subject to any termination charge. The one month service will be subject to Company-initiated rate adjustments when approved by the regulatory authority.

(3) If the customer does not elect an additional payment period or does not request discontinuance of service, service will be continued at the monthly rate currently in effect for the month-to-month payment rate, under the terms specified in ***(2)*** preceding.

b. Nonrecurring charges are not applicable for services renewed under the CSPP. Any new channel equipment and/or facilities added to a customer's network at the time of renewal will be subject to all appropriate nonrecurring charges.

c. The Company may discontinue or change any or all renewal options with approval of the appropriate regulatory authority.

d. When a customer renews a CSPP arrangement, the rates and charges in effect on the first day of service of the renewal will apply. (T)

e. Recognition of previous service will be given to customers who renew an existing CSPP arrangement, for the same or larger system(s) and all associated rate elements at the same location(s), provided that the length of the new CSPP arrangement is a minimum twenty-four month service period or equals/exceeds the remaining service period of the original CSPP arrangement, whichever is greater. An example of a larger system is the renewal of an Analog Voice Grade ***(a.k.a. BellSouth SPA DS0 VG)*** service with a DS1 High Capacity ***(a.k.a. BellSouth SPA DS1)*** service.

f. Recognition of previous service will be given to month-to-month customers with a service date of January 1, 1994 or later who convert to a CSPP arrangement, provided the minimum service period has been met. For customers whose service date is January 1, 1994 or earlier, recognition will be given for the previous service back to January 1, 1994. For customers whose service date is later than January 1, 1994, recognition for the previous service will be given back to the actual service date.

g. To determine the appropriate CSPP Payment Plan for the renewed arrangement, recognition of service will consist of the sum of months in service of the completed service arrangement and the sum of the months of the proposed service period of the CSPP arrangement. For example, a CSPP arrangement for a thirty-six month service period under the thirty-six month Term Payment Plan is renewed for twenty-four months with no changes at the end of the thirty-six month period. The sum of months for the completed and proposed service periods would equal sixty months and would be billed under the sixty month Term Payment Plan. Another example is a month-to-month customer, in service for fifteen months, who wishes to convert to a sixty month CSPP arrangement with no changes. The combined service period of the month-to-month arrangement and the CSPP arrangement is equal to seventy-five months, which would be billed under the eighty-four month Term Payment Plan.

E2. GENERAL REGULATIONS

E2.4 Payment Arrangements and Credit Allowances (Cont'd)

E2.4.9 Optional Payment Plan (Cont'd)

A. Channel Services Payment Plan (Cont'd)

7. Renewal Options (Cont'd)

   g. (Cont'd) (N)

(M)

8. Transfer of Service (N)

   a. Service may be transferred to a new customer at the same location upon prior written concurrence by the new customer as specified in this Tariff. This does not constitute a disconnect of service or a discontinuance of an existing CSPP arrangement. The new customer will be subject to all provisions and equipment configurations currently in effect for the previous customer. Regulations concerning transfer of service between subscribers as stated in other sections of this Tariff also apply under CSPP. (N)

9. Prepayment (N)

   a. For payment periods longer than one month, the customer may prepay the total outstanding recurring monthly rates. The prepayment of monthly rates in no way constitutes a purchase and the Company retains full ownership of all services covered by the prepayment. The following conditions apply: (N)

      (1) Customer who prepay six months or more will have an allowance applied. The prepayment factor to be used for each month prepaid will be revised periodically by the Company. (N)

      (2) Monthly rates for all services covered by a single Letter of Election must be prepaid. Monthly rates must be prepaid for services added subsequently and placed on the same Letter of Election (i.e., customer-elected coterminous option) with a prepaid system. (N)

      (3) Customers who change the length of a prepaid payment period will be credited any unused portion of the prepayment, subject to termination charges as specified in 4. preceding. (N)

      (4) Customers who prematurely disconnect will have termination charges deducted from the prepaid amount and any balance credited to their bill. (N)

10. Exception to Termination Liability For State, County, and Municipal Governments (N)

   a. In the event that all or any part of the service is disconnected at customer request prior to expiration of any selected payment period of greater than one month's duration, the customer will be required to pay a termination charge as stated in the service tariffs. The Tariffs' provisions concerning termination liability for recurring charges only shall be inapplicable to any state, county or municipal governmental entity when there is in effect, as a result of action by such entity and through a duly constituted legislative, administrative body: (N)

      (1) a statute; (N)

      (2) an ordinance; (N)

      (3) a policy directive; or (N)

      (4) a constitutional provision (N)

E2. GENERAL REGULATIONS

E2.4 Payment Arrangements and Credit Allowances (Cont'd)

E2.4.9 Optional Payment Plan (Cont'd)

A. Channel Services Payment Plan (Cont'd)

10. Exception to Termination Liability For State, County, and Municipal Governments (Cont'd)

a. (Cont'd)

which restricts or prohibits an additional contractual payment for early termination of a contract by any such entity, or agency thereof, due to an unavailability of funding. When service is being provided and funding to the governmental entity for such service becomes unavailable, the governmental entity may cancel the service without additional payment obligation. Provided however, that if the governmental entity cancels the service for any reason other than the unavailability of funds, the termination liability provisions in the Tariff shall apply.

11. Moves of Service(s) under CSPP

Termination Liability Charges will not apply to customer requests for moves of service under CSPP from one location to another location subject to the following:

a. The original and new premises locations must be in Company territory within the same state.

b. The move from the original location to the new location must be completed within thirty days of the original premises disconnect date.

c. No lapse in billing will occur for moves of service under CSPP.

d. Orders to disconnect the existing service and reestablish it at the new location must be related.

e. Any local channels, interoffice channels, and/or optional features and functions from the original location that are not reestablished at the new location will be subject to applicable Termination Liability charges.

f. Any additions made at the new location will be treated as coterminous additions in accordance with 3. preceding.

g. All regulations and charges for changes made to the service coincident to the move shall apply.

h. All appropriate nonrecurring charges for moves of service under CSPP as specified elsewhere in this Tariff will apply.

i. Moves of service that involve a change of jurisdiction, e.g., intraLATA to intrastate, intrastate to interstate, etc. will not be treated as a disconnect of service with regard to Termination Liability charge application. The customer must subscribe to a payment arrangement offered in the appropriate tariff which is a minimum twenty-four month service period or equals/exceeds the remaining contract period, whichever is greater.

B. Fast Packet Services Payment Plan

1. General

a. The regulations specified herein are applicable only to specific Fast Packet Access Services as indicated in the rate regulations for such services in Section E21. following.

b. The terms of this Fast Packet Services Payment Plan (SPP) apply to such specific Fast Packet Services except as noted in the rate regulations for the given service.

c. The Fast Packet SPP allows customers to pay stabilized monthly rates for fixed service periods selected by the customer. The two payment plans offered are as follows:

(1) Term Payment Plan A - service periods may be selected from 12 months to 24 months in length.

(2) Term Payment Plan B - service periods may be selected from 25 months to 48 months in length.

d. When the customer renews a Fast Packet SPP arrangement under E2.4.9.B.7.d. following and the sum of months is greater than the number of months for which the services is available under a Fast Packet SPP, the current rates for the longest payment plan available for that service will apply. For example, when the customer extends XACDS ***(a.k.a. BellSouth Exchange Access Connectionless Data service)*** beyond 48 months, Payment Plan B rates will apply. (T)

e. When the customer orders service to be provided under a Fast Packet SPP arrangement, the customer must designate to the Company the payment plan and the service period desired, e.g., Plan B and 36 months.

E2. GENERAL REGULATIONS

E2.4 Payment Arrangements and Credit Allowances (Cont'd)

E2.4.9 Optional Payment Plan (Cont'd)

B. Fast Packet Services Payment Plan (Cont'd)

1. General (Cont'd)

   f. Rates stabilized under a Fast Packet SPP arrangement are exempt from Company initiated increases, however, decreases to any rate element will automatically flow through to the customer.

2. Application of Rates and Charges

   a. The rates and charges applicable are those in effect as set forth in the rate regulations of this tariff for the particular Fast Packet Access Service involved as of the Application Date, provided that the actual service date does not exceed the later of the following.

      (1) the Service Date under a standard service interval, or

      (2) the earliest date on which service can reasonably be made available to the customer by the Company.

   b. If the customer desires a service date later than as provided in A. preceding, the rates and charges in effect at the time of the actual service date are applicable.

   c. The customer will be required to pay a Termination Liability Charge in the event that all or any part of a service is disconnected at the customer's request prior to expiration of any selected payment period of greater than one month's duration except as specified in E2.4.9.B.4 following.

   d. The Termination Liability Charge is determined by multiplying the number of months remaining in the contract payment period by the contracted monthly rate by 90 percent.

      (1) For example, a customer subscribes to a Fast Packet Transport Service using Term Payment Plan A and selects the 18-month payment period. After 12 months the customer chooses to terminate service. The Termination Liability Charge is calculated by multiplying 6 months (18 months - 12 months) by the monthly rate by 90 percent.

3. Additions

   a. Additions of services or rate elements (e.g., Network Interfaces) must be under a new Fast Packet SPP arrangement at rates and charges as specified in E2.4.9.B.2. preceding.

   b. Termination charges for premature disconnection of added contractual services will apply as set forth under Disconnects in E2.4.9.B.4. following.

   c. Additions under Fast Packet SPP are exempt from Company-initiated rate changes for all payment periods longer than one month. However, decreases for any rate element will automatically flow through to the customer.

4. Disconnects

   a. When a service or rate element, included under a Fast Packet SPP arrangement, is disconnected prior to expiration of the selected service period, Termination Liability Charges apply as set forth in E2.4.9.B.2. preceding except as specifically stated otherwise in E2.4.9.B.4.b following. Remaining services or rate elements will not be affected by such disconnections.

   b. When a tariffed service under a Fast Packet SPP arrangement is disconnected prior to the expiration of a selected service period as a result of a customer requested change at the same location to either another speed of the same tariffed service or to another Fast Packet Access Service under an Optional Payment Plan, termination liability charges will not apply when:

      (1) The completed service period is ***a minimum of six (6)*** months, and (C)

      (2) The service period of the new Optional Payment Plan arrangement for the newly selected service is equal to or longer than the remaining service period of the disconnected arrangement, and

      (3) The newly selected service is a transmission speed that is either higher than the old service, or is a transmission speed that is the next lower transmission speed from the old service, and

      (4) The service orders to install the newly selected service and disconnect the old service are related together and received by the Telephone Company at the same time, and there is no lapse in service between installation of the newly selected service and disconnection of the existing service.

      Nonrecurring charges apply for the installation of the newly requested service. Termination liability charges may apply for changes to associated Special Access Services under an Optional Payment Plan as set forth in tariffs regulating those services.

All BellSouth marks contained herein and as set forth in the trademarks and servicemarks section of this Tariff are owned by BellSouth Intellectual Property Corporation.

E2. GENERAL REGULATIONS

E2.4 Payment Arrangements and Credit Allowances (Cont'd)

E2.4.9 Optional Payment Plan (Cont'd)

B. Fast Packet Services Payment Plan (Cont'd)

5. Moves of Service Under Fast Packet SPP (M)

a. Termination Liability Charges will not apply to customer requests for moves of service under Fast Packet SPP from one location to another location subject to the following: (M)

(1) The original and new premises locations must be in Company territory within the same state. (M)

(2) The move from the original location to the new location must be completed within thirty days of the original premises disconnect date. (M)

(3) No lapse in billing will occur for moves of service under Fast Packet SPP. (M)

(4) Orders to disconnect the existing service and re-establish it at the new location must be related together and received by the Company at the same time. (M)

(5) Any rate elements (i.e., Network Interfaces) from the original location that are not re-established at the new location will be subject to applicable Termination Liability Charges. (M)

(6) Any additions made at the new location will be treated as coterminous additions in accordance with E2.4.9.B.3. preceding. (M)

E2. GENERAL REGULATIONS

E2.4 Payment Arrangements and Credit Allowances (Cont'd)

E2.4.9 Optional Payment Plan (Cont'd)

B. Fast Packet Services Payment Plan (Cont'd) (N)

5. Moves of Service Under Fast Packet SPP (Cont'd) (N)

a. Termination Liability Charges will not apply to customer requests for moves of service under Fast Packet SPP from one location to another location subject to the following: (Cont'd) (N)

(7) All regulations and charges for changes made to the service coincident to that move shall apply. (N)

(8) Moves of service that involve a change of jurisdiction (e.g., interstate to intrastate) will not be treated as a disconnect of service with regard to Termination Liability Charge application. The customer must subscribe to a payment arrangement offered in the appropriate intrastate tariff which is equal to or greater than the remaining contract period. (N)

6. Requests for Changes in Length of Optional Payment Period (N)

a. Subsequent to the establishment of a Fast Packet SPP arrangement and prior to the completion of the selected service period for that arrangement, the Fast Packet SPP arrangement may be replaced by a new Fast Packet SPP arrangement at rates and charges in effect on the first day of service under the new Fast Packet SPP arrangement, subject to the following conditions: (N)

(1) No credit will be given for payments made under the original Fast Packet SPP arragement except for credits allowed in E2.4.9.9.A. following. (N)

(2) The service period selected for the new Fast Packet SPP arrangement begins on the new Fast Packet SPP effective date but not later than the expiration date of the Fast Packet SPP being replaced. (N)

(3) Nonrecurring charges will not be reapplied for existing services. (N)

(4) If the new Fast Packet SPP arrangement has a service period shorter in length than the time remaining under the service period for the existing Fast Packet SPP arrangement, the change to the new Fast Packet SPP constitutes a disconnection of the existing Fast Packet SPP arrangement for which Termination Liability Charges apply. (N)

7. Renewal Options (N)

a. When a service period under an existing Fast Packet SPP arrangement is completed, the customer may select a new Fast Packet SPP arrangement at rates and charges in effect on the first day of service under the new Fast Packet SPP arrangement, continue service under the month-to-month rates, or discontinue service with no Termination Liability Charge. If the customer does not elect to either discontinue service or continue service under a new Fast Packet SPP arrangement, service will be continued under month-to-month rates. (N)

b. Any new rate elements added to a customer's network or changes to existing services at the time of renewal will be subject to all appropriate nonrecurring charges. (N)

c. When a customer renews a Fast Packet SPP arrangement, the rates and charges in effect on the first day of service of the renewal will apply. (N)

d. Recognition of previous service will be given to customers who renew an existing Fast Packet SPP arrangement, for all associated rate elements at the same location(s), provided that the length of the new Fast Packet SPP arrangement is equal to or greater than the remaining service period of the original Fast Packet SPP arrangement. (N)

e. Recognition of previous service back to the actual service date will be given to month-to-month customers who convert to a Fast Packet SPP arrangement. (N)

f. To determine the appropriate Fast Packet SPP Payment Plan for the renewed arrangement, recognition of service will consist of the sum of months in service of the completed service arrangement and the sum of the months of the proposed service period of the Fast Packet SPP arrangement. For example, a Fast Packet SPP arrangement for a 24-month service period under Term Payment Plan A is renewed for 16 months with no changes at the end of the 24-month period. The sum of months for the completed and proposed service periods would equal 40 months and would be billed under Term Payment Plan B. (N)

E2. GENERAL REGULATIONS

E2.4 Payment Arrangements and Credit Allowances (Cont'd)

E2.4.9 Optional Payment Plan (Cont'd)

B. Fast Packet Services Payment Plan (Cont'd) (N)

7. Renewal Options (Cont'd) (N)

   f. (Cont'd) (N)

   Another example is a month-to-month customer, in service for 15 months, who wishes to convert to a 24-month Fast Packet SPP arrangement with no changes. The combined service period of the Month-to-Month arrangement and the Fast Packet SPP arrangement is equal to 39 months which would be billed uner Payment Plan B. (N)

8. Transfer of Service (N)

   a. Service transferred to a new customer at the same location in accordance with E2.1.2 preceding does not constitute a disconnect of service or a discontinuance of an existing Fast Packet SPP arrangement. (N)

9. Prepayment (N)

   a. Upon entering into a Fast Packet SPP arrangement, the customer may prepay the outstanding recurring monthly rates in whole or in part for all rate elements included in the Fast Packet SPP arrangement. The Company retains full ownership of services in accordance with E2.4.6 preceding. The following conditions apply: (N)

      (1) A prepayment allowance will be applied to the amount prepaid for each given month equal to 0.6666% per month compounded monthly for the number of months the payment is advanced. (N)

      (2) The customer may elect the percentage of the monthly rates to be prepaid, provided however, the same percentage shall apply to all rate elements included in the Fast Packet SPP arrangement for all months remaining in the service period. (N)

      (3) The same prepayment percentage will apply in the event the customer adds services to an existing Fast Packet SPP arrangement subsequent to the establishment of the service. (N)

      (4) When the customer who has prepaid recurring monthly reates replaces the existing Fast Packet SPP arrangement with a new Fast Packet SPP arrangement, the customer will be credited with that portion of the prepayment amount, representing a prepayment of the monthly recurring rates remaining in the existing Fast Packet SPP arrangement. (N)

      (5) Customers who prematurely disconnect will have Termination Liability Charges deducted from the unused prepaid balance. The remaining prepaid balance, if any, will be credited to their bill. (N)

E2. GENERAL REGULATIONS

E2.4 Payment Arrangements and Credit Allowances (Cont'd)

E2.4.9 Optional Payment Plan (Cont'd)

C. Transport Payment Plan (TPP)

1. General

a. The regulations and terms specified herein are applicable only to BellSouth Dedicated Ring, SMARTRing service (a.k.a. BellSouth Dedicated Ring)***, BellSouth Metro Ethernet service*** and/or BellSouth Wavelength service access services as indicated in the rate regulations in Sections E6., E7. and E29. of this Tariff. (C)

b. The TPP allows customers to pay stabilized monthly rates for fixed service periods selected by the customer. The three payment plans offered are as follows:

(1) Payment Plan A, service periods may be selected from 12 months to 36 months in length.

(2) Payment Plan B, service periods may be selected from 37 months to 60 months in length.

(3) Payment Plan C, service periods may be selected from 61 months to 96 months in length.

c. For conversions to the TPP arrangement, the number of months under the TPP arrangement must equal or exceed the number of months remaining under the CSPP arrangement.

d. Termination liability charges and nonrecurring charges will not apply when a CSPP customer converts to a TPP arrangement.

e. When the customer renews a TPP arrangement and the sum of months in service added to the new contract period is greater than the number of months for which the service is available under a TPP, the current Payment Plan C rates will apply.

f. When the customer orders service to be provided under a TPP arrangement, the customer must designate to the Company the payment plan desired.

g. Rates stabilized under a TPP arrangement are exempt from Company initiated increases, however, decreases for any rate element will automatically be reflected in the rates charged to the customer.

h. Conversions of BellSouth Wavelength service, LightGate service (a.k.a. BellSouth SPA Point to Point Network), BellSouth Dedicated Ring and/or SMARTRing service (a.k.a. BellSouth Dedicated Ring) TPP arrangements to a higher order of CSPP service are allowed. (T)

2. Application of Rates

a. The stabilized monthly recurring rates as set forth in Sections E6., E7. and E29. ***of this Tariff*** are set as of the Application Date for BellSouth Dedicated Ring, SMARTRing service (a.k.a. BellSouth Dedicated Ring)***, BellSouth Metro Ethernet service*** and/or BellSouth Wavelength service provided that the actual service date does not exceed the latter of the following: (C)

(1) the Service Date under a standard service interval, or

(2) the earliest date by which service can be made available to the customer by the Company.

b. If the customer desires a service date later than as provided in a. preceding, the stabilized monthly recurring rates in effect on the service date are applicable.

3. Additions

a. Additions of services or rate elements, to existing BellSouth Dedicated Ring and/or SMARTRing service (a.k.a. BellSouth Dedicated Ring) systems, to activate spare or unused capacities, must be activated under the same rate plan as the existing TPP arrangement. BellSouth Dedicated Ring and/or SMARTRing service (a.k.a. BellSouth Dedicated Ring) channel interfaces must be activated as set forth in Sections E6. and E7. following. (T)

(M)

Material previously appearing on this page now appears on page(s) 13.9.1 of this section.

All BellSouth marks contained herein and as set forth in the trademarks and servicemarks section of this Tariff are owned by BellSouth Intellectual Property Corporation.

E2. GENERAL REGULATIONS

E2.4 Payment Arrangements and Credit Allowances (Cont'd)

E2.4.9 Optional Payment Plan (Cont'd)

C. Transport Payment Plan (TPP) (Cont'd)

4. Disconnects (M)

a. Except as provided in b. through f. following, when a BellSouth Wavelength service, BellSouth Dedicated Ring***,*** ***BellSouth Metro Ethernet service*** and/or SMARTRing service (a.k.a. BellSouth Dedicated Ring) rate element is disconnected prior to being in service for a 12-month period, (e.g., the minimum term for a Plan A TPP), the termination liability charge will be derived by multiplying the difference in rates between the current month-to-month rate and the rate for the TPP arrangement selected. For example, a customer subscribes to a TPP for 24 months (Plan A) and terminates service after 10 months. The termination liability charge will be applied by multiplying the number of months in service (10) by the difference between the month-to-month and Plan A monthly rates. With the exception of Renewal Options in 7. following, a four month minimum service period for BellSouth Wavelength service, BellSouth Dedicated Ring***,*** ***BellSouth Metro Ethernet service*** and/or SMARTRing service (a.k.a. BellSouth Dedicated Ring) TPP customers will be applicable and all month-to-month regulations will be applicable. (C)(M)

When a BellSouth Wavelength service, BellSouth Dedicated Ring***,*** ***BellSouth Metro Ethernet service*** or SMARTRing service (a.k.a. BellSouth Dedicated Ring) TPP customer disconnects a rate element prior to the 12 month TPP minimum, all current month-to-month nonrecurring charges associated with the BellSouth Wavelength service rate elements, BellSouth Dedicated Ring or the SMARTRing service (a.k.a. BellSouth Dedicated Ring) ring level rate elements will apply. (C)(M)

BellSouth Dedicated Ring and SMARTRing service (a.k.a. BellSouth Dedicated Ring) service ring level rate elements are defined as following: Local Channel, Interoffice Channel, Internodal Channel, Alternate Central Office Channel, Customer Node and Central Office Node. BellSouth Wavelength service rate elements are defined as Wavelength Channels. (T)(M)

Material appearing on this page previously appeared on page(s) 13.9 and 13.10 of this section.

All BellSouth marks contained herein and as set forth in the trademarks and servicemarks section of this Tariff are owned by BellSouth Intellectual Property Corporation.

E2. GENERAL REGULATIONS

E2.4 Payment Arrangements and Credit Allowances (Cont'd)

E2.4.9 Optional Payment Plan (Cont'd)

C. Transport Payment Plan (Cont'd)

4. Disconnects (Cont'd)

(M)

b. Except as provided in c. through f. following, when a BellSouth Wavelength service, BellSouth Dedicated Ring***, BellSouth Metro Ethernet service*** or SMARTRing service (a.k.a. BellSouth Dedicated Ring) TPP customer disconnects services or rate elements prior to the minimum number of months for the plan period selected, termination liability charges will apply. The termination liability charge will be derived at the time of disconnection by taking the difference between the rate for the TPP period for which the customer subscribed, and the rate for the TPP period that the customer's completed service would otherwise qualify, and multiplying the difference by the number of months service the customer completed under a TPP. For example, a customer subscribes to a TPP for 73 months (Plan C) and terminates service after 20 months (Plan A). The termination liability charge will be applied by multiplying the number of months in service (20) by the difference between the Plan A and Plan C monthly rates. When a BellSouth Wavelength service, BellSouth Dedicated Ring***, BellSouth Metro Ethernet service*** or SMARTRing service (a.k.a. BellSouth Dedicated Ring) customer disconnects service after the minimum number of months for the TPP arrangement selected but prior to the actual expiration date of the TPP arrangement, termination liability charges do not apply. (C)

c. When a TPP arrangement is disconnected prior to the expiration of a plan period due to a customer requested change to a higher order of service at the same location, or to expand or upgrade an existing service, termination liability charges will not apply when:

(1) the customer has completed at least 6 months of the originally selected TPP service period, and

(2) the service period of the new arrangement for the new service is equal to or longer than the remaining service period of the disconnected arrangement, and

(3) the service orders to install the new service and disconnect the old service are related together and received by the Company at the same time, and there is no lapse in service between installation of the higher order of service and disconnection of the existing service, and

(4) the capacity of the new service is equal to or greater than the existing service. For converting LightGate service (a.k.a. BellSouth SPA Point to Point Network) to SMARTPath service DS3 Transport service (a.k.a. BellSouth SPA DS3 Shared Ring), the capacity of the LightGate service (a.k.a. BellSouth SPA Point to Point Network) is considered to be the quantity of DS3s activated on the LightGate service (a.k.a. BellSouth SPA Point to Point Network). ***Specific changes of BellSouth Metro Ethernet service that are considered to be the same or higher order of service are set forth in E7.4.32 of this Tariff.*** (C)

For the purposes of determining a higher order of service in all payment plans, the following ranking will be used (Analog Voice Grade (a.k.a. BellSouth SPA DSO VG) service=lowest, SMARTRing service (a.k.a. BellSouth Dedicated Ring)=highest): (T)

- Analog Voice Grade (a.k.a. BellSouth SPA DSO VG) services (T)
- DS0 (a.k.a. BellSouth SPA DS0 Digital Data) Services (T)
- DS1 (a.k.a. BellSouth SPA DS1) Services (T)
- SMARTPath service (a.k.a. BellSouth SPA DS1 Shared Ring) (T)
- BellSouth Wavelength service (T)
- SMARTRing service (a.k.a. BellSouth Dedicated Ring) (T)
- BellSouth Dedicated Ring (T)

d. A termination liability charge will not apply to disconnects of channel interfaces associated with LightGate service (a.k.a. BellSouth SPA Point to Point Network), BellSouth Dedicated Ring and/or SMARTRing services (a.k.a. BellSouth Dedicated Ring). (T)

Material previously appearing on this page now appears on page(s) 13.9.1 of this section.

All BellSouth marks contained herein and as set forth in the trademarks and servicemarks section of this Tariff are owned by BellSouth Intellectual Property Corporation.

E2. GENERAL REGULATIONS

E2.4 Payment Arrangements and Credit Allowances (Cont'd)

E2.4.9 Optional Payment Plan (Cont'd)

C. Transport Payment Plan (Cont'd)

4. Disconnects (Cont'd)

e. Disconnects, moves, or rearrangements involving the removal of the following BellSouth® Dedicated Ring and SMARTRing® service (a.k.a. BellSouth® Dedicated Ring) rate elements, local channel, interoffice channel, customer node and central office node, to allow the placement of additional nodes and channels for existing customers where the total number of nodes does not decrease, will not be subject to termination liability charges. (T)

f. A change of jurisdiction from interstate to intrastate service constitutes a disconnection of service for which termination charges are applicable. However, if such service continues between the same serving locations, and the customer enters into a new TPP arrangement in the intrastate jurisdiction for the same or larger service capacity and associated rate elements for a service period equal to or greater than the service period remaining under the interstate TPP arrangement, no interstate termination liability charge will be applicable.

5. Moves of Service Under TPP

a. Moves to a different building will be treated as a discontinuance and start of service and all associated nonrecurring charges will apply as stated in E7.4.5 ***and E29.1.4*** except as provided in c. following. A four month minimum service period must be satisfied for all service rate elements serving the original building location. (C)

b. Moves of service within the same building will not constitute a disconnection of service for purposes of the application of termination liability charges. Current month-to-month nonrecurring charges specified in E7.4.5 ***and E29.1.4*** are applicable. (C)

c. Termination Liability Charges will not apply to customer requests for moves of service to a different building subject to the following conditions:

(1) The move from the original location to the new location must be completed within thirty days of the original premises disconnect date. For LightGate® service systems (a.k.a. BellSouth® SPA Point to Point Network), the new customer premises must be served by the same serving wire center as the original location. (T)

(2) No lapse in billing will occur for moves of service under a TPP arrangement.

(3) Orders to disconnect the existing service and reestablish it at the new location must be related together and received by the Company at the same time.

(4) Any additions made at the new location will be handled in accordance with (3) preceding.

(5) All regulations and charges for changes made to the service coincident with the move will apply.

(6) All appropriate nonrecurring charges for moves of service as specified in E7.4.5 ***and E29.1.4*** preceding will apply. (C)

Any rate elements or quantities for local channels, interoffice channels, ***wavelength channels*** and/or optional features and functions from the original location that are not reestablished at the new location will be subject to applicable Termination Liability Charges. (C)

6. Requests for Changes in Length of Service Period

a. Subsequent to the establishment of a TPP arrangement, and prior to the completion of the selected service period for that arrangement, the TPP arrangement may be replaced by a new TPP arrangement at rates and charges in effect on the first day of service under the new TPP arrangement, subject to the following conditions:

(1) No credit will be given for payments made under the original TPP arrangement, except for credits allowed under 9.a. following.

(2) The service period selected for the new TPP arrangement begins on the new TPP effective date but not later than the expiration date of the TPP being replaced.

(3) Nonrecurring charges do not apply for existing services.

(4) If the new TPP arrangement has a service period shorter in length than the time remaining under the service period for the existing TPP arrangement, the change to the new TPP arrangement constitutes a disconnection of the existing TPP arrangement for which termination liability charges apply.

(M)

Material previously appearing on this page now appears on page(s) 13.12 of this section.

® BellSouth is a registered trademark of BellSouth Intellectual Property Corporation
® Registered Service Mark of BellSouth Intellectual Property Corporation

E2. GENERAL REGULATIONS

E2.4 Payment Arrangements and Credit Allowances (Cont'd)

E2.4.9 Optional Payment Plan (Cont'd)

C. Transport Payment Plan (Cont'd)

7. Renewal Options

a. When a service period under an existing CSPP or TPP arrangement is completed, the customer may select a new TPP arrangement at rates and charges in effect on the first day of service under the new TPP arrangement, continue service under the month-to-month rates, or discontinue service with no termination liability charge. If the customer does not elect to either discontinue service or continue service under a new TPP arrangement, service will be continued under month-to-month rates. The TPP customer of record will have a 60-day grace period after which current month-to-month rates will apply. The stabilized monthly recurring rates as set forth in Sections E7. and E29. ***of this Tariff*** remain in effect during the 60-day grace period. (T)

b. Any new services added to a customer's network or changes to existing services at the time of renewal will be subject to all appropriate nonrecurring charges and four month minimum service period requirements.

c. When a customer renews a TPP arrangement, the rates and charges in effect on the first day of service of the renewal will apply.

d. To determine the appropriate TPP Payment Plan for the renewed arrangement, recognition of service will consist of the sum of months in service of the completed service arrangement and the sum of months of the proposed service period of the TPP arrangement.

e. Recognition of previous service will be given to customers who renew an existing TPP arrangement, for the same or larger system(s) and all associated rate elements at the same location(s), provided that the length of the new TPP arrangement is equal to or greater than the remaining service period of the original TPP arrangement. Recognition for satisfying the four month service period will be given for renewals of the same size systems, rings, and all associated rate elements. Conversion to larger systems and rings will incur new four month minimum service requirements.

f. Recognition of previous service will be given to month-to-month customers who convert to a TPP arrangement, for the same or larger system(s) and all associated rate elements at the same location(s), provided the four month minimum service period for that service has been met.

g. Recognition of previous service will be given to TPP customers who convert from CSPP arrangements provided the customer is the original customer of record at the time of transfer.

h. When an existing BellSouth Wavelength service, BellSouth Dedicated Ring***, BellSouth Metro Ethernet service*** and/or SMARTRing service (a.k.a. BellSouth SPA Dedicated Ring) customer has completed the selected TPP commitment period and the service reverts to month-to-month service, only the month-to-month service will receive recognition for determining the appropriate TPP arrangement or any subsequent TPP arrangement. (C)

8. Transfer of Service

a. Service transferred to a new customer at the same location in accordance with E2.1.2 preceding does not constitute a disconnect of service or a discontinuance of an existing TPP arrangement.

9. Prepayment

a. Upon entering into a TPP arrangement, the customer may prepay the outstanding recurring monthly rates in whole or in part for all rate elements included in the TPP arrangement. The following conditions apply:

(1) A prepayment allowance will be applied to the amount prepaid for each given month equal to 0.6666 percent per month compounded monthly for the number of months the payment is advanced.

(2) The customer may elect the percentage of the monthly rates to be prepaid, provided however, the same percentage shall apply to all rate elements included in the TPP arrangement for all months remaining in the service period.

(3) This same prepayment percentage will apply in the event the customer adds services to an existing TPP arrangement subsequent to the establishment of the service.

(4) When a customer who has prepaid recurring monthly rates replaces the existing TPP arrangement with a new TPP arrangement, the customer will be credited with that portion of the prepayment amount, representing a prepayment of the monthly recurring rates remaining in the existing TPP arrangement.

(5) Customers who disconnect service and incur termination liability charges, such charges shall be deducted from the unused prepaid balance. The remaining prepaid balance, if any, will be credited to their bill.

All BellSouth marks contained herein and as set forth in the trademarks and servicemarks section of this Tariff are owned by BellSouth Intellectual Property Corporation.

E2. GENERAL REGULATIONS

E2.4 Payment Arrangements and Credit Allowances (Cont'd)

E2.4.10 Service Installation Guarantee

A. The Company assures that orders for services to which the Service Installation Guarantee applies will be installed and available for customer use no later than the Service Date as specified in E5.2.3.B. following. The Service Installation Guarantee is applicable only as specified in E6.7.1.A. and E7.4.1.A. following.

B. The failure of the Company to meet this commitment will result in the credit of an amount equal to the nonrecurring charges associated with the individual service having the missed Service Date being applied to the customer's bill. The credit will include only nonrecurring charges associated with the services specified in E6.7.1.A. and E7.4.1.A. following for which nonrecurring charges are applicable. The nonrecurring charges will be credited at the rate at which they were billed. The credit will not be provided if a credit of the same nonrecurring charge for the same service is provided under any other provisions of this Tariff.

C. (DELETED) (D)

D. Service Installation Guarantees do not apply:

1. when failure to meet the Service Date occurs because of:
   a. any act or omission, which shall include an accurate and complete service order from this customer, any other customer or any third party, or of any other entity providing a portion of a service,
   b. labor difficulties, governmental orders, civil commotions, criminal actions against the Company, acts of God, war, or other circumstances beyond the Company's control,
   c. unavailability of the customer's facilities and/or equipment,
2. to service requiring Special Construction as set forth in Section E14. following,
3. to Specialized Service or Arrangements or Individual Case Basis filings,
4. for jointly provisioned services except as stipulated in C. preceding, and
5. to BellSouth SWA or Special Access (a.k.a. BellSouth SPA) installation, moves and arrangements of service with requested intervals of four days or less, as measured from the Application Date of the service order.

In addition, Service Installation Guarantees will not apply during a declared National Emergency. Priority installation of National Security Emergency Preparedness (NSEP) telecommunications services shall take precedence.

E2.5 Connections

E2.5.1 General

A. Equipment and Systems (i.e., terminal equipment, multiline terminating systems and communications systems) may be connected with access service (BellSouth SWA and Special (a.k.a. BellSouth SPA)) furnished by the Company where such connection is made in accordance with the provisions specified in Technical Reference Publication AS No. 1 and in E2.1 preceding.

E2.5.2 Reserved for Future Use

E2. GENERAL REGULATIONS

E2.5 Connections (Cont'd)

E2.5.3 Reserved for Future Use (T)

E2. GENERAL REGULATIONS

E2.5 Connections (Cont'd)

E2.5.4 Reserved for Future Use (T)

E2. GENERAL REGULATIONS

E2.5 Connections (Cont'd)

E2. GENERAL REGULATIONS

E2.5 Connections (Cont'd)

E2. GENERAL REGULATIONS

E2.5 Connections (Cont'd)

E2. GENERAL REGULATIONS

E2.5 Connections (Cont'd)

E2. GENERAL REGULATIONS

E2.5 Connections (Cont'd)

E2.5.5 Reserved for Future Use (T)

E2. GENERAL REGULATIONS

E2.5 Connections (Cont'd)

E2. GENERAL REGULATIONS

E2.5 Connections (Cont'd)

E2. GENERAL REGULATIONS

E2.5 Connections (Cont'd)

E2.5.6 Reserved for Future Use (T)

E2.5.7 Reserved for Future Use (T)

E2. GENERAL REGULATIONS

E2.5 Connections (Cont'd)

E2.5.8 Reserved for Future Use (T)

E2.5.9 Reserved for Future Use (T)

E2. GENERAL REGULATIONS

E2.5 Connections (Cont'd)

E2. GENERAL REGULATIONS

E2.5 Connections (Cont'd)

E2.5.10 Reserved for Future Use (T)

E2. GENERAL REGULATIONS

E2.5 Connections (Cont'd)

E2. GENERAL REGULATIONS

E2.5 Connections (Cont'd)

E2.5.11 Reserved for Future Use (T)

E2. GENERAL REGULATIONS

E2.5 Connections (Cont'd)

E2.5.12 Reserved for Future Use (T)

E2. GENERAL REGULATIONS

E2.5 Connections (Cont'd)

E2. GENERAL REGULATIONS

E2.5 Connections (Cont'd)

E2.5.13 Reserved for Future Use (T)

E2. GENERAL REGULATIONS

E2.6 Definitions

Certain terms used herein are defined as follows:

ACCESS CODE

The term "Access Code" denotes a uniform seven digit code assigned by the Company to an individual IC. The seven digit code has the form 101XXXX, 950-0XXX, or 950-1XXX.

ACCESS MINUTES

The term "Access Minutes" denotes that usage of exchange facilities in Intrastate service for the purpose of calculating chargeable usage. On the originating end of an intrastate call, usage is measured from the time the originating end user's call is delivered by the Company and acknowledged as received by the IC's facilities connected with the originating exchange. On the terminating end of an intrastate call, usage is measured from the time the call is received by the end user in the terminating exchange. Timing of usage at both originating and terminating ends of an intrastate call shall terminate when the calling or called party disconnects, whichever event is recognized first in the originating and terminating exchanges, as applicable.

ACCESS TANDEM

The term "Access Tandem" denotes a Company switching system that provides a concentration and distribution function for originating or terminating traffic between end offices and an IC's terminal locations.

ACCESS TANDEM SWITCHING

Access Tandem Switching denotes a rate element which is assessed for switching an IC's traffic through the Access Tandem.

ALTERNATE CENTRAL OFFICE (N)

The term "Alternate Central Office" denotes a wire center other than the serving wire center of the location of a customer node (N) associated with BellSouth Dedicated Ring and SMARTRing® service (a.k.a. BellSouth Dedicated Ring).

ANSWER/DISCONNECT SUPERVISION

The term "Answer/Disconnect Supervision" denotes the transmission of the switch trunk equipment supervisory signal (off-hook or on-hook) to the IC point of connection for terminating calls to the exchange as an indication that the called party has answered or disconnected.

ASSUMED AVERAGE ACCESS MINUTES

The term "Assumed Average Access Minutes" denotes the usage that will be billed each month to ICs for Feature Group A or B access arrangements served from Company serving end offices where recorded minutes of use are not available.

ATM

The term Asynchronous Transfer Mode (ATM) denotes one of the general class of packet switching technologies that relay traffic via an address contained within the packet (referred to in ATM as cells). ATM is a switching method in which information does not occur periodically with respect to some reference such as a frame pattern.

ATM CELL

The term ATM cell denotes the fixed length packets utilized in ATM cell-based switching services. An ATM cell is 53 bytes long, consisting of a five-byte header containing the address and a fixed 48-byte information field.

ATM CELL-BASED SWITCHING

The term ATM cell-based switching denotes the transfer of fixed length ATM cells as opposed to variable length frames used in other packet switching technologies.

ATTENUATION DISTORTION

The term "Attenuation Distortion" denotes the difference in loss at specified frequencies relative to the loss at 1004 Hz.

BALANCE (100 TYPE) TEST LINE

The term "Balance (100 Type) Test Line" denotes an arrangement in an end office which provides for balance and noise testing.

BASIC SERVICE ELEMENT

The term Basic Service Element denotes an optional network capability associated with a Basic Serving Arrangement.

BELLSOUTH INWARD OPERATOR SERVICES (IOS)

A Company operator provision of Verification and Emergency Interruption functions associated with operator service calls made by an IC's operator.

BELLSOUTH INWARD OPERATOR SERVICES LOCATION

A Company office where Company equipment first receives a BellSouth Inward Operator Service call from an IC's premises and selects the first available operator to respond.

E2. GENERAL REGULATIONS

E2.6 Definitions (Cont'd)

BELLSOUTH OPERATOR SERVICES SYSTEM LOCATION

The term "BellSouth Operator Services System Location" (OSS location) denotes a Company office where Company equipment routes or receives IC Operator Services calls to or from the IC location.

BELLSOUTH SWA BASIC SERVING ARRANGEMENT

The term BellSouth SWA Basic Serving Arrangement denotes the connection of a customer to and through the BOCs networks, and should be considered the fundamental connection to those networks.

BELLSOUTH SWA COMMON TRANSPORT

The term "BellSouth SWA Common Transport" denotes the transmission of the customer's switched access traffic between the Access Tandem and the end office, between the BellSouth SWA FGA dial tone office and the end office (for terminating traffic) and, between the end office which serves as the host office for a remote switching system or module (RSS or RSM) and the RSS or RSM. (C)

BELLSOUTH CUSTOM NETWORK SERVICE

The term "BellSouth Custom Network Service" refers to the provisioning of custom-designed networks composed of various Special Access (a.k.a. BellSouth SPA) services. The rates and regulations for such networks, or arrangements, are found in Section E7. of this Tariff.

BELLSOUTH SWA DEDICATED TRANSPORT

The term "BellSouth SWA Dedicated Transport" denotes the transmission of the customer's switched access traffic utilizing dedicated facilities between the customer's serving wire center (SWC) and customer designated points, i.e. SWC to a Company Facility Hub (Hub), SWC to an Access Tandem, SWC to a customer designated end office, Hub to an Access Tandem, Hub to Hub, and Hub to an end office.

BELLSOUTH SWA FGD AND BELLSOUTH SWA TSBSA 3

The term "BellSouth SWA FGD and BellSouth SWA TSBSA 3" denotes the signaling system which is used, by equal access end offices, to transmit originating information and address digits to the customer's premises. Features of this system include overlap outpulsing, identification of the type of call, identification of the ten-digit telephone number of the calling party, and acknowledgment wink supervisory signals.

BIPOLAR WITH 8 ZERO SUBSTITUTION (B8ZS)

The term "Bipolar with 8 Zero Substitution" (B8ZS) denotes a line code which allows transport of an all zero octet over a DS1/1.544 Mbps High Capacity channel. B8ZS enables Clear Channel Capability on DS1/1.544 Mbps High Capacity service.
BIT

The term "Bit" denotes the smallest unit of information in the binary system of notation.

BUSINESS DAY

The term "Business Day" denotes the times of day that a company is open for business. Generally, in the business community, these are 8:00 or 9:00 A.M. to 5:00 or 6:00 P.M., respectively, with an hour for lunch, Monday through Friday, resulting in a standard forty (40) hour work week. Due to the possibility of variations in Business Day hours based on Company policy, union contract and location, verification of the hours should be made via contact with the specific Company location involved.

E2. GENERAL REGULATIONS

E2.6 Definitions (Cont'd)

CALL

The term "Call" denotes an IC attempt for which the complete address code (e.g., 0-, 911 or 10 digits) is provided to the serving dial tone office or in the case of BellSouth SWA 8XX Toll Free Dialing Ten Digit Screening service when the address code is provided to the office performing the translation or screening function.

CARRIER OR COMMON CARRIER

See "Interexchange Carrier"

CCS

The term "CCS" denotes a hundred call seconds which is a standard unit of traffic load that is equal to 100 seconds of usage or capacity of a group of servers (e.g., trunks).

CCS7 SIGNALING CONNECTION (N)

The CCS7 Signaling Connection provides a 56 kbps facility dedicated to a single customer, which originates at the customer's signaling point of interconnection in a LATA and terminates at a Company Signaling Transfer Point (STP) selected by the Company. This facility, connecting the customer to a BellSouth STP, is ordered to a Company FSPOI within the same LATA as the customer's signaling point of interconnection. (N)

CCS7 SIGNALING TERMINATION (N)

The CCS7 Signaling Termination provides a dedicated point of interface at a Company STP for a customer's CCS7 Signaling Connection. (N)

CCS7 Access Arrangement Usage (N)

CCS7 Access Arrangement Usage refers to messages traversing the Company's CCS7 Signaling network for call set-up (ISUP) and non-call set-up (TCAP) purposes. (N)

CENTRAL OFFICE

The term "Central Office" denotes a local Company switching system where Telephone Exchange Service customer station loops are terminated for purposes of interconnection to each other and to trunks.

CENTRAL OFFICE PREFIX

The term "Central Office Prefix" denotes the first three digits (NXX) of the seven digit telephone number assigned to an End User's Telephone Exchange Service when dialed on a local basis.

CENTRALIZED AUTOMATIC REPORTING ON TRUNKS TESTING

The term "Centralized Automatic Reporting on Trunks Testing" denotes a type of testing which includes the capacity for measuring operational and transmission parameters.

CENTREX TYPE SERVICES

Central office based non-transport arrangements which permit abbreviated internal calling, and inward and outward calling from station lines associated with ESSX-1 service, ESSX® service, Digital ESSX® service, MultiServ® service, MultiServ® PLUS service, and BellSouth® Centrex service.

CHANNEL(S)

The term "Channel(s)" denotes an electrical or photonic, in the case of fiber optic based transmission systems, communications path between two or more points of termination.

CHANNEL SERVICE UNIT

The term "Channel Service Unit" denotes equipment which performs one or more of the following functions: termination of a digital facility, regeneration of digital signals, detection and/or correction of signal format errors and remote loop back.

CHANNELIZATION EQUIPMENT

Equipment which derives individual channels of voice and/or data from a higher capacity to a lower capacity or bandwidth or vice versa.

CHANNELIZE

The term "Channelize" denotes the process of multiplexing-demultiplexing wider bandwidth or higher speed channels into narrower bandwidth or lower speed channels and vice-versa.

CLEAR CHANNEL CAPABILITY

The term "Clear Channel Capability" denotes the ability to transport twenty-four, 64 Kbps channels over a 1.544 Mbps High Capacity service via B8ZS line code format.

® BellSouth is a registered trademark of BellSouth Intellectual Property Corporation
®Registered Service Mark of BellSouth Intellectual Property Corporation

E2. GENERAL REGULATIONS

E2.6 Definitions (Cont'd)

C-MESSAGE NOISE

The term "C-Message Noise" denotes the frequency weighted average noise within an idle voice channel. The frequency weighting, called C-message, is used to simulate the frequency characteristic of the 500-type telephone set and the hearing of the average subscriber.

C-NOTCHED NOISE

The term "C-Notched Noise" denotes the C-message frequency weighted noise on a voice channel with a holding tone, which is removed at the measuring end through a notch (very narrow band) filter.

(DELETED) (D)

COMMON LINE

The term "Common Line" denotes a line, trunk, pay telephone line or other facility provided under the General Subscriber Service Tariff of the Company, terminated on a central office switch. A common line-residence is a line or trunk provided under the residence regulations of the General Subscriber Service Tariff. A common line-business is a line provided under the business regulations of the General Subscriber Service Tariff.

COMMUNICATIONS SYSTEM

The term "Communications System" denotes channels and other facilities which are capable of communications between terminal equipment provided by other than the Company.

COMPANY

Wherever used in this Tariff, "Company" and "Southern Bell Telephone and Telegraph Company" refer to BellSouth Telecommunications, Inc., unless the context clearly indicates otherwise.

CUSTOMER LOCATION

The term "Customer Location" denotes an IC premises within the Local Access Transport Area (LATA).

DATA TRANSMISSION (107 TYPE) TEST LINE

The term "Data Transmission (107 Type) Test Line" denotes an arrangement which provides for a connection to a signal source which provides test signals for one-way testing of data and voice transmission parameters.

DECIBEL (dB)

The term "Decibel" denotes a unit used to express relative difference in power, usually between acoustic or electric signals, equal to ten (10) times the common logarithm of the ratio of two signal powers.

DECIBEL REFERENCE NOISE C-MESSAGE WEIGHTING

The term "Decibel Reference Noise C-Message weighting" denotes noise power measurements with C-Message weighting in decibels relative to a reference 1000 Hz tone of 90 dB below 1 milliwatt.

DECIBEL REFERENCE NOISE C-MESSAGE REFERENCED TO 0

The term "Decibel Reference Noise C-Message Referenced to 0" denotes noise power in "Decibel Reference Noise C-Message Weighting" referred to or measured at a zero transmission level point.

All BellSouth marks contained herein and as set forth in the trademarks and servicemarks section of this Tariff are owned by BellSouth Intellectual Property Corporation.

E2. GENERAL REGULATIONS

E2.6 Definitions (Cont'd)

(M)

DEMARCATION POINT

The point of demarcation and/or interconnection between Company communications facilities and terminal equipment, protective apparatus or wiring at a subscriber's premises. Company-installed facilities at, or constituting, the demarcation point shall consist of wire or a jack conforming to Subpart F of Part 68 of the Federal Communications Commission's rules. "Premises" as used herein generally means a dwelling unit, other building or a legal unit of real property such as a lot on which a dwelling unit is located, as determined by the Company's reasonable and nondiscriminatory standard operating practices.

DETAIL BILLING

The term "Detail Billing" denotes the listing of each message and/or rate element for which charges to an IC or End User are due on a bill prepared by the Company.

DS0

This denotes a channel service expressed in terms of its digitally encoded data bit rate in accordance with the North American hierarchy of digital signal levels. It is generally referred to as having a 64 Kbps transmission data rate signal; however, customer transmitted bit rates are limited to 56 Kbps. The required format and interface specifications are contained in BellSouth Technical Reference TR-NPL-000341.

DS1

This denotes a channel service expressed in terms of its digitally encoded data bit rate in accordance with the North American hierarchy of digital signal levels. It has a 1.544 Mbps transmission data rate, and provides for the two-way simultaneous transmission of isochronous timed, Bipolar Return-to-Zero (BPRZ) bit stream format. Unframed signal formats are not permitted or compatible with Company equipment. The required format and interface specifications are contained in BellSouth Technical Reference TR-NPL-000054.

Material previously appearing on this page now appears on page(s) 33.1 of this section.

E2. GENERAL REGULATIONS

E2.6 Definitions (Cont'd)

DUAL TONE MULTIFREQUENCY ADDRESS SIGNALING
The term "Dual Tone Multifrequency Address Signaling" denotes a type of signaling that is an optional feature of BellSouth SWA FGA and BellSouth SWA LSBSA. It may be utilized when BellSouth SWA FGA and BellSouth SWA LSBSA is being used in the terminating direction (from the point of interface with the IC to the local exchange end office). An office arranged for Dual Tone Multifrequency Signaling would expect to receive address signals from the IC in the form of Dual Tone Multifrequency signals.

ECHO CONTROL
The term "Echo Control" denotes the control of reflected signals in a telephone transmission path.

ECHO PATH LOSS (EPL)
The term "Echo Path Loss" denotes the measure of reflected signal at a 4-wire point of termination without regard to the send and receive Transmission Level Point (TLP).

ECHO RETURN LOSS (ERL)
The term "Echo Return Loss" denotes a frequency weighted measure of return loss over the middle of the voiceband (approximately 500 to 2500 Hz), where talker echo is most annoying.

EFFECTIVE 2-WIRE
The term "Effective 2-Wire" denotes a condition which permits the simultaneous transmission in both directions over a channel, but it is not possible to insure independent information transmission in both directions. Effective 2-wire channels may be terminated with 2-wire or 4-wire interfaces.

EFFECTIVE 4-WIRE
The term "Effective 4-Wire" denotes a condition which permits the simultaneous independent transmission of information in both directions over a channel. The method of implementing effective 4-wire transmission is at the discretion of the Company (physical, time domain, frequency-domain separation or echo cancellation techniques). Effective 4-wire channels may be terminated with a 2-wire interface at the customer premises. However, when terminated 2-wire, simultaneous independent transmission cannot be supported because the 2-wire interface combines the transmission paths into a single path.

EGRESS CIRCUITS (N)

The term “Egress Circuits” denotes the facility used to transport the customer’s dialed BellSouth® Remote Access Service traffic to the customer’s designated location once it has been collected and aggregated by the remote access server. (N)

EMERGENCY INTERRUPTION SERVICE
A function performed by BellSouth's Inward Operator Services operators which allows BellSouth's Inward Operator Services operators to enter a connection for the purpose of attempting to interrupt a conversation in progress on a line within the LATA.

END OFFICE SWITCH
The term "End Office Switch" denotes a local Company switching system where Telephone Exchange Service customer station loops are terminated for purposes of interconnection to trunks. Included are Remote Switching Modules and Remote Switching Systems served by a host office in a different wire center.

END USER
The term "End User" denotes any customer of an intrastate telecommunications service that is not a carrier, except that a carrier shall be deemed to be an "end user" to the extent that such carrier uses a telecommunications service for administrative purposes, without making such service available to others, directly or indirectly.

ENHANCED SERVICE PROVIDER (ESP)
An ESP provides enhanced and/or information services which are defined as those services offered over the Company's common carrier facilities and which employ computer processing applications that: act on the format, content, code, protocol, or similar aspects of the end user's transmitted information; provide the end user additional, different, or restructured information; or involve end user interaction with stored information.

® BellSouth is a registered trademark of BellSouth Intellectual Property Corporation

E2. GENERAL REGULATIONS

E2.6 Definitions (Cont'd)

(DELETED) (D)

(DELETED) (D)

ENTRY SWITCH

See First Point of Switching.

ENVELOPE DELAY DISTORTION

The term "Envelope Delay Distortion" denotes a measure of the linearity of the phase versus frequency of a channel.

EQUAL LEVEL ECHO PATH LOSS

The term "Equal Level Echo Path Loss" denotes the measure of Echo Path Loss (EPL) at a 4-wire interface which is corrected by the difference between the send and receive Transmission Level Path (TLP). (ELEPL = EPL - TLP (send) + TLP (receive)).

E2. GENERAL REGULATIONS

E2.6 Definitions (Cont'd)

EXCHANGE

The term "Exchange" denotes a unit generally smaller than a Local Access and Transport Area, established by the Company for the administration of communications service in a specified area which usually embraces a city, town or village and its environs. It consists of one or more central offices together with the associated facilities used in furnishing communications service within that area. One or more designated exchanges comprise a given Local Access and Transport Area.

FACILITY BASED INTEREXCHANGE CARRIER

The term "Facility Based Interexchange Carrier" denotes a certified Interexchange Carrier that completes/terminates calls utilizing a combination of owned and/or leased and/or resold facilities and /or services of other Interexchange Carriers and/or Local Exchange Company's services in lieu of or in addition to resold MTS/BellSouth SWA WATS or MTS/BellSouth SWA WATS type services.

FACILITIY SIGNALING POINT OF INTERCONNECTION (FSPOI) (N)

The term FSPOI denotes a Company-designated ordering point within a Company LATA to which customers may order CCS7 Signaling Connections. (N)

FIELD IDENTIFIER

The term "Field Identifier" denotes two to four characters that are used on service orders to convey specific instructions. Field Identifiers may or may not have associated data. Selected Field Identifiers are used in Company billing systems to generate non-recurring charges.

FIRST COME-FIRST SERVED

The term "First Come-First Served" denotes a procedure followed when the first order received will be the first order processed.

FIRST POINT OF SWITCHING

The term "First Point of Switching" denotes the first Company location at which switching occurs on the terminating path of a call proceeding from the IC terminal location to the terminating end office and, at the same time, the last Company location at which switching occurs on the originating path of a call proceeding from the originating end office to the IC terminal location.

FREQUENCY SHIFT

The term "Frequency Shift" denotes the change in the frequency of a tone as it is transmitted over a channel.

GRANDFATHERED

The term "Grandfathered" denotes Terminal Equipment Multiline Terminating Systems, and Protective Circuitry directly connected to the facilities utilized to provide services under the provisions of this Tariff, and which are considered grandfathered under Part 68 of the FCC Rules and Regulations.

HOST OFFICE

The term "Host Office" denotes an electronic switching system which provides call processing capabilities for one or more Remote Switching Modules or Remote Switching Systems (RSM or RSS).

E2. GENERAL REGULATIONS

E2.6 Definitions (Cont'd)

IC TERMINAL LOCATION

The term "IC Terminal Location" denotes a location within a LATA (Point of Presence) from which the IC (1) provides and/or administers telecommunications services for its own use or for the use of its customers (End Users) and (2) has the capability of testing the facilities operated or terminated at that location.

IMMEDIATELY AVAILABLE FUNDS

The term "Immediately Available Funds" denotes a corporate or personal check drawn on a bank account and funds which are available for use by the receiving party on the same day on which they are received and include U.S. Federal Reserve bank wire transfers, U.S. Federal Reserve notes (paper cash), U.S. coins, U.S. Postal Money Orders and New York Certificates of Deposit.

IMPEDANCE BALANCE

The term "Impedance Balance" denotes the method of expressing Echo Return Loss and Singing Return Loss at a four-wire interface whereby the gains and/or losses of the four-wire portion of the transmission path, including the hybrid, are not included in the specification.

E2. GENERAL REGULATIONS

E2.6 Definitions (Cont'd)

IMPULSE NOISE
The term "Impulse Noise" denotes any momentary occurrence of the noise on a channel over a specified level threshold. It is evaluated by counting the number of occurrences, which exceed the threshold.

INDIVIDUAL CASE BASIS (ICB)
The term "Individual Case Basis" denotes a condition in which the regulations, if applicable, rates and charges for an offering under the provisions of this Tariff are developed based on the circumstances in each case.

INGRESS CIRCUITS

The term “Ingress Circuits” denotes the facility used to transport the customer’s incoming dialed BellSouth® Remote Access Service traffic, e.g. Primary Rate ISDN.

INSERTED CONNECTION LOSS
The term "Inserted Connection Loss" denotes the 1004 Hz power difference (in dBs) between the maximum power available at the originating end and the actual power reaching the terminating end through the inserted connection.

INTEGRATED SERVICES DIGITAL NETWORK USER PART (ISDNUP)
An SS7 protocol which provides internetwork signaling to support circuit control, ISDN access signaling and specialized subscriber facilities.

INTERCONNECTION
Interconnection denotes ***the several Interconnection rate elements that apply to BellSouth SWA minutes of use. Separate rate elements are applicable for originating and terminating minutes of use. Additionally, separate rate elements are applicable when the IC utilizes Company-provided transport facilities versus those service applications where there are no Company transport facilities utilized.*** (C)

INTEREXCHANGE CARRIER(S) (IC)
The term "Interexchange Carrier(s)" denotes any individual, partnership, corporation, association, or governmental agency, or any other entity, which subscribes to the services offered under this Tariff and is authorized by the South Carolina Public Service Commission by policy statement or certification to provide intrastate telecommunications services for its own use or for the use of its customers.

INTERMODULATION DISTORTION
The term "Intermodulation Distortion" denotes a measure of the nonlinearity of a channel. It is measured using 4 tones, and evaluating the ratios (in dBs) of the transmitted composite 4-tone signal power to the second-order products of the tones (R2), and the third-order products of the tones (R3).

INTRASTATE COMMUNICATIONS
The term "Intrastate Communications" denotes any communications in South Carolina subject to oversight by the South Carolina Public Service Commission as provided by the laws of the State.

LINE CONTROLLED PAY STATIONS

The term "Line Controlled Pay Stations" denotes line controlled pay stations utilizing Telephone Company serving central office equipment for the necessary call processing features required for pay telephone traffic. Traffic from these stations will be completed to the customer over BellSouth SWA TSBSA 3 trunks, which must be equipped with the Coin Sent-Paid Capability optional feature.

LINE SIDE CONNECTION
The term "Line Side Connection" denotes a connection of a transmission path to the line side of a local exchange switching system.

LOCAL ACCESS AND TRANSPORT AREA (LATA)
The term "Local Access and Transport Area" denotes a geographic area established for the provision and administration of communications service. It encompasses one or more designated exchanges, which are grouped to serve common social, economic and other purposes.

LOCAL CALLING AREA
The term "Local Calling Area" (LCA) denotes a geographical area, as defined in the Company's General Subscriber Service Tariff, in which an end user (telephone exchange service subscriber) may complete a call without incurring MTS charges.

® BellSouth is a registered trademark of BellSouth Intellectual Property Corporation.

E2. GENERAL REGULATIONS

E2.6 Definitions (Cont'd)

LOCAL TANDEM SWITCH

The term "Local Tandem Switch" denotes a local Company switching unit by which local or access telephonic communications are switched to and from an End Office Switch.

LOCATION PROVIDER (N)

The term "Location Provider" denotes the person or persons having a legal authority to permit the Payphone Service Provider to place pay telephones on their premises. (N)

LOOP AROUND TEST LINE

The term "Loop Around Test Line" denotes an arrangement utilizing a Company central end office to provide a means to make certain two-way transmission tests on a manual basis. This arrangement has two central office terminations, each reached by means of separate telephone numbers and does not require any specific IC terminal equipment. Equipment subject to this test arrangement is at the discretion of the IC.

LOSS DEVIATION

The term "Loss Deviation" denotes the variation of the actual loss from the designed value.

MAJOR FRACTION THEREOF

The term "Major Fraction Thereof" is any period of time in excess of 1/2 of the stated amount of time. As an example, in considering a period of 24 hours, a major fraction thereof would be any period of time in excess of 12 hours exactly. Therefore, if a given service is interrupted for a period of thirty six hours and fifteen minutes, the IC would be given a credit allowance for two twenty four hour periods for a total of forty eight hours.

MESSAGE

The term "Message" denotes a "call" as defined preceding.

MILLIWATT (102 TYPE) TEST LINE

The term "Milliwatt (102 Type) Test Line" denotes an arrangement in an end office which provides a 1004 Hz tone at 0 dBm0 for one-way transmission measurements towards the IC terminal location from the Company end office.

MOBILE TELEPHONE SWITCHING OFFICE (MTSO)

The term "Mobile Telephone Switching Office (MTSO)" denotes a Cellular Mobile Carrier (CMC) switching system that is used to terminate mobile stations for purposes of interconnection to each other and to trunks interfacing with the public switched network.

MULTIPOINT CHANNEL

The term "Multipoint Channel" refers to any connection which terminates three or more circuits on the same bridging node.

NETWORK CONTROL SIGNALING

The term "Network Control Signaling" denotes the transmission of signals used in the telecommunications system which perform functions such as supervision (control, status, and charge signals), address signals (e.g., dialing), calling and called number identifications, rate of flow, service selection error control and audible tone signals (call progress signals indicating re-order or busy conditions, alerting, coin denominations, coin collect and coin return tones) to control the operation of switching machines in the telecommunications system.

NETWORK INTERFACE

The term "Network Interface" denotes the point of demarcation on the End User's premises at which the Company's responsibility for the provision of Access Services end.

NON FACILITY BASED INTEREXCHANGE CARRIER

The term "Non Facility Based Interexchange Carrier" denotes a certified Interexchange Carrier that completes/terminates calls utilizing resold MTS/BellSouth SWA WATS or MTS/BellSouth SWA WATS type services.

NONSYNCHRONOUS TEST LINE

The term "Nonsynchronous Test Line" denotes an arrangement in step-by-step end offices which provides operational tests which are not as complete as those provided by the synchronous test lines, but which can be made more rapidly.

E2. GENERAL REGULATIONS

E2.6 Definitions (Cont'd)

NORTH AMERICAN NUMBERING PLAN (NANP)

The term "North American Numbering Plan" denotes a 3-digit area or Numbering Plan Area (NPA) code and a 7-digit telephone number made up of a 3-digit Central Office (CO) code plus a 4-digit station number.

OFF-HOOK

The term "Off-hook" denotes the active condition of BellSouth SWA or a Telephone Exchange Service line.

ON-HOOK

The term "On-hook" denotes the idle condition of BellSouth SWA or a Telephone Exchange Service line.

OPEN CIRCUIT TEST LINE

The term "Open Circuit Test Line" denotes an arrangement in an end office which provides an ac open circuit termination of a trunk or line by means of an inductor of several Henries.

OPERATOR SERVICES SYSTEM

The term "Operator Services System" (OSS) denotes the switching equipment, facilities, operator positions and software components utilized for the provision of BellSouth Operator Services.

OPERATOR SERVICES SYSTEM SERVING AREA

The term "Operator Services System Serving Area" (OSS serving area) denotes the geographic operational domain of an Operator Services System.

ORIGINATING DIRECTION

The term "Originating Direction" denotes the use of Access Service for the origination of calls from an end user premises to an IC terminal location.

OVERLAP OUTPULSING

The term "Overlap Outpulsing" denotes the feature of the Exchange Access Signaling System which permits initiation of pulsing to the IC's premises before the calling subscriber has completed dialing an originating call.

(DELETED) (D)

PAY TELEPHONE LINE (N)

The term "Payphone Telephone Line" denotes facilities provided by the Company which connect pay telephone stations to the Local Exchange Network. (N)

PAYPHONE SERVICE PROVIDER (N)

The term "Payphone Service Provider" denotes one who provides payphone service, which is the provision of public or semi-public pay telephones, the provision of inmate telephone service in correctional institutions and any ancillary services. (N)

PHASE JITTER

The term "Phase Jitter" denotes the unwanted phase variations of a transmitted signal.

POINT OF INTERFACE /POINT OF TERMINATION

The term "Point of Interface" or "Point of Termination", denotes the point of demarcation, within the IC terminal location, at which the Company's responsibility for the provision of Access Service ends.

POINT OF PRESENCE

See IC Terminal Location

E2. GENERAL REGULATIONS

E2.6 Definitions (Cont'd)

PREMISES

The term "Premises" denotes a building, or a portion of a building in a multitenant building, or buildings on continuous property (except Railroad Right-of-Way, etc.) not separated by a public highway.

REMOTE ACCESS SERVER

The term “Remote Access Server” denotes equipment that aggregates the customer’s BellSouth® Remote Access Service dialed traffic and transports it to the customer’s designated location over their egress circuits.

REMOTE SWITCHING MODULES AND/OR REMOTE SWITCHING SYSTEMS

The term "Remote Switching Modules and/or Remote Switching Systems" (RSM or RSS) denotes small remotely controlled electronic end office switches which obtain their call processing capability from a Host Office. The Remote Switching Modules and/or Remote Switching Systems cannot accommodate direct trunks to an IC.

RETURN LOSS

The term "Return Loss" denotes a measure of the similarity between the two impedances at the junction of two transmission channels (e.g., four to two-wire junctions). The higher the return loss, the higher the similarity.

REGISTERED EQUIPMENT

The term "Registered Equipment" denotes the IC's or the IC's customer's premises equipment (CPE) which complies with and has been approved within the Registration Provisions of Part 68 of the FCC Rules and Regulations.

SECONDARY CHANNEL

The term "Secondary Channel" denotes an optional, low bit rate, digital channel transmission path derived from a primary Digital Data Access (a.k.a. BellSouth SPA DS0 Digital Data) services channel. Terminal equipment required to support Secondary Channel Capability must be provided by the end user.

SERVICE ACCESS CODE

The term "Service Access Code (SAC)" denotes the 500, 700, 800 and 900 NXX numbers administered by Bell Communications Research as part of the North American Numbering Plan.

SERVICE INSTALLATION GUARANTEE

The term "Service Installation Guarantee" denotes a program under which the Company will provide a credit to the customer's account for certain services in those instances when the Service Date is not met due to Company reasons.

SERVICE SWITCHING POINT (N)

The term “Service Switching Point” (SSP) denotes a node in a CCS7 Signaling System that formulates and receives signaling messages. (N)

SERVING WIRE CENTER

The term "Serving Wire Center" denotes the wire center from which the IC terminal location would normally obtain dial tone from the Company.

SEVEN DIGIT MANUAL TEST LINE

The term "Seven Digit Manual Test Line" denotes an arrangement which allows the IC to select balance, milliwatt and synchronous test lines, by manually dialing a seven digit number over the associated access connection.

SHARED NETWORK ARRANGEMENT

The term "Shared Network Arrangement" denotes a service offering whereby multiple ICs may connect on a channelized high capacity service and the Company will undertake to maintain separate records for each IC's portion of the shared network.

SHORT CIRCUIT TEST LINE

The term "Short Circuit Test Line" denotes an arrangement in an end office, which provides an ac short circuit termination of the trunk or line by means of a capacitor of at least 4 microfarads.

® BellSouth is a registered trademark of BellSouth Intellectual Property Corporation

E2. GENERAL REGULATIONS

E2.6 Definitions (Cont'd)

SIGNAL-TO-C-NOTCHED NOISE RATIO

The term "Signal-to-C-Notched Noise Ratio" denotes the ratio in dB of a tone signal to the corresponding C-Notched Noise.

SIGNAL TRANSFER POINT (STP)

The term "Signal Transfer Point" denotes a signaling point which routes and/or transfers signaling messages through the common channel signaling network.

SINGING RETURN LOSS (SRL)

The term "Singing Return Loss" denotes the frequency weighted measure of return loss at the edges of the voiceband (200 to 500 Hz and 2500 to 3200 Hz), where singing (instability) problems are most likely to occur.

(SIGNALING) POINT CODE

The term "Signaling Point Code" denotes a binary code uniquely identifying a signaling point in a signaling network. This code is used, depending upon its position in the label, either as a destination point code, identifying the intended destination of the message, or as an originating point code, identifying the originating point of the message.

SIGNALING POINT OF INTERCONNECTION (SPOI) (N)

The term Signaling Point of Interconnection (SPOI) denotes the location where a Company-provided CCS7 Signaling Connection terminates at a customer location. (N)

SPECIAL ORDER

The term "Special Order" denotes an order for a Billing and Collection Service, BellSouth Directory Assistance Access service, or BellSouth Inward Operator Services.

SUBTENDING END OFFICE OF AN ACCESS TANDEM

The term "Subtending End Office of an Access Tandem" denotes an end office that has final trunk group routing through that tandem.

SWITCHED LOCAL CHANNEL

The Switched Local Channel denotes a switched transport facility between the IC's serving wire center and the IC's premises.

E2. GENERAL REGULATIONS

E2.6 Definitions (Cont'd)

SYNCHRONOUS TEST LINE

The term "Synchronous Test Line" denotes an arrangement in an end office which performs marginal operational tests of supervisory and ring-tripping functions.

TELEPHONE ANSWERING SERVICE CONCENTRATOR

The term "Telephone Answering Service Concentrator" denotes a device located in a central office of the Company which concentrates incoming calls to some number of Telephone Answering Service's client lines to some smaller number of trunks/channels connected to the IC's terminal location equipment.

TERMINATING DIRECTION

The term "Terminating Direction" denotes the use of Access Service for the completion of calls from an IC terminal location to an End User's premises.

TERMINATION LIABILITY CHARGE

The term "Termination Liability Charge" when used in connection with specially constructed facilities denotes the portion of the Maximum Termination Liability that is applied as a nonrecurring charge when all services are discontinued prior to the expiration of the specified liability period. The term "Termination Liability" as used in connection with the application of termination charges for access services denotes the discontinuance, either at the request of the customer or by the Company under its regulations concerning cancellation for cause, of service or facilities (including channels and station equipment) provided by the Company.

TRADITIONAL SIGNALING

The term "Traditional Signaling" denotes the Intermachine Signaling System which has been traditionally used in North America for the purpose of transmitting the called number's address digits from the originating end office to the switching machine which will terminate the call. In this system, all of the dialed digits are received by the originating switching machine, a path is selected, and the sequence of supervisory signals and outpulsed digits is initiated. No overlap outpulsing, ten digit ANI or ANI information digits are included in this signaling sequence. Acknowledgment wink is required from the terminating switching machine except when the originating switching machine is SXS.

TRAFFIC

The term "traffic" denotes a volume of IC access minutes of use or calls.

TRAFFIC OPERATOR POSITION SYSTEM (TOPS) TANDEM

The term "Traffic Operator Position System" (TOPS tandem) denotes a Company office where Company equipment routes or receives IC Operator Services calls to or from the IC location. A TOPS tandem is also known as an OSS location.

TRANSACTIONS CAPABILITIES APPLICATION PART (TCAP) MESSAGES

The term "TCAP Messages" relates to the application of TIA Interim Standard 41 (Sub-systems 005-010) for the transmission of non-call associated messages over the ***BellSouth SWA*** CCSAC network. (T)

TRANSMISSION MEASURING (105 TYPE) TEST LINE/RESPONDER

The term "Transmission Measuring (105 Type) Test Line/Responder" denotes an arrangement in an end office which provides far-end access to a responder and permits two-way loss and noise measurements to be made on trunks from a near end office.

TRANSMISSION PATH

The term "Transmission Path" denotes an electrical path capable of transmitting signals within the range of the service offering, e.g., a voice grade transmission path is capable of transmitting voice frequencies within the approximate range of 300 to 3000 Hz. A transmission path is comprised of physical or derived facilities consisting of any form or configuration of plant typically used in the telecommunications industry.

E2. GENERAL REGULATIONS

E2.6 Definitions (Cont'd)

TRUNK
The term "Trunk" denotes a communications path connecting two switching systems in a network, used in the establishment of an end-to-end connection.

TRUNK GROUP
The term "Trunk Group" denotes a set of trunks, which are traffic engineered as a unit for the establishment of connections between switching systems in which all of the communications paths are interchangeable.

TRUNK SIDE CONNECTION
The term "Trunk Side Connection" denotes the connection of a transmission path to the trunk side of a local exchange switching system.

TWO-WIRE TO FOUR-WIRE CONVERSION
The term "Two-Wire to Four-Wire Conversion" denotes an arrangement which converts a four-wire transmission path to a two-wire transmission path to allow a four-wire facility to terminate in a two-wire entity such as a central office switch trunk circuit or switching system.

(DELETED) (D)

UNIFORM SERVICE ORDER CODE

The term "Uniform Service Order Code" denotes a three or five character alphabetic, numeric, or an alphanumeric code that identifies a specific item of service or equipment. Uniform Service Order Codes are used in the Company billing system to generate recurring rates and nonrecurring charges.

V AND H COORDINATES METHOD
The term "V and H Coordinates Method" denotes a method of computing airline miles between two points by utilizing an established formula which is based on the Vertical (V) and Horizontal (H) coordinates of the two points.

VERIFICATION SERVICE
"Verification Service" is a function performed by the BellSouth's Inward Operator Services operators for the purpose of determining the line status (e.g., out of service, conversation in progress, etc.) of a line within the LATA. Proper verification of a requested number is dependent upon the station arrangements of the requested number.

VIRTUAL COLLOCATION CROSS-CONNECT

A “Virtual Collocation Cross-Connect” provides for central office interconnection of collocator-provided Company leased transmission equipment to BellSouth SWA and Special Access (a.k.a. BellSouth SPA) services.

WIRE CENTER
A "Wire Center" is a Company facility that houses Company equipment necessary for the provision of switched and non-switched telephone service to customers in a defined geographical area. The facility is identified with V&H coordinates and is assigned one or more NXX's for use in providing switched services to customers located in the specified geographical area. The Company equipment located at a Wire Center may consist of switching equipment or non-switched equipment working with a distant host switch as well as equipment used to terminate dedicated non-switched services. Wire Centers capable of terminating access facilities are designated by the Company.

500 SERVICE PROVIDER
The term "500 Service Provider" refers to an entity purchasing BellSouth SWA 500 service for use in the provision of Personal Communication Service. A 500 Service Provider must have been assigned a 500 NXX by the North American Numbering Plan Administrator.

800 DATABASE
The term "800 Database" refers to the use of database technology to determine to which IC an originating 800 call is to be delivered. The 800 Database routes calls to an IC based on the dialed ten digit 800 number.

E2.7 Special Promotions

E2.7.1 Regulations

The Company may offer special promotions of new or existing services or products for limited periods. These promotions will be offered on a completely non-discriminatory basis with each subscriber in the classification of service and area for which the promotion is offered having an equal opportunity for participation, subject to the availability of products, services and facilities. In the event that a promotion occurs during any other scheduled promotion, the customer may choose only one of the available promotions in which to participate.

All BellSouth marks contained herein and as set forth in the trademarks and servicemarks section of this Tariff are owned by BellSouth Intellectual Property Corporation.

E2. GENERAL REGULATIONS

E2.8 Change in Recurring Rates Notification Requirements

A. For services offered in this tariff where Price Lists are applicable, the Public Service Commission will be advised by the Company of any price changes at least thirty days prior to the effective date of the price change. Notification of existing customers will be as follows: (a) rate increases - thirty days advance notification, (b) rate decreases - notification coincident with price adjustment.

E2.9 Reserved for Future Use

E2.10 Reserved for Future Use

E2.11 Trademarks and Servicemarks Protection (T)

E2.11.1 Use of Trademarks and Servicemarks (T)

Trademarks and Servicemarks owned by BellSouth Intellectual Property Corporation may not be used by any entity concurring in or providing services pursuant to this Tariff except under an express written license agreement with BellSouth Intellectual Property Marketing Corporation. (T)

E3. CARRIER COMMON LINE ACCESS

CONTENTS

E3.1	**General Description**	1	
E3.2	**Limitations**	1	
E3.3	**Undertaking of the Company**	1	
E3.4	**Obligations of the IC**	1	
E3.5	**Payment Arrangements**	1.1	
E3.6	**Determination of Usage Subject to Carrier Common Line Access Charges**	1.1	
E3.7	**Resold Services**	1.1	
E3.8	**(DELETED)**	3.1	(D)
E3.9	**Rate Regulations**	3.2	
E3.10	**Rates and Charges**	4	

E3. CARRIER COMMON LINE ACCESS

The Company will provide Carrier Common Line Access Service (Carrier Common Line Access) to ICs.

E3.1 General Description

A. Carrier Common Line Access provides for the use of Company common lines by ICs for access to end users to furnish intrastate communications service.

B. Carrier Common Line Access is provided where the IC obtains Company BellSouth SWA services under this Tariff.

C. Premium Access is (1) BellSouth SWA service provided to ICs under this Tariff which furnish intrastate MTS/BellSouth SWA WATS; and (2) BellSouth SWA service in an end office converted to Equal Access.

D. Non Premium Access is BellSouth SWA service provided in an end office not yet converted to Equal Access to ICs that do not furnish intrastate MTS/BellSouth SWA WATS.

E3.2 Limitations

A. A telephone number is not provided with Carrier Common Line Access.

B. Detail billing is not provided for Carrier Common Line Access.

C. Directory listings are not included in the rates and charges for Carrier Common Line Access.

D. Intercept arrangements are not included in the rates and charges for Carrier Common Line Access.

E. Where BellSouth SWA services are connected with Special Access (a.k.a. BellSouth SPA) services at Company designated BellSouth SWA WATS serving offices for the provision of BellSouth SWA WATS or BellSouth SWA WATS-type services, BellSouth SWA service minutes which are carried on that end of the service (i.e., originating minutes for outward BellSouth SWA WATS and BellSouth SWA WATS-type services and terminating minutes for inward BellSouth SWA WATS and BellSouth SWA WATS-type services) shall not be assessed Carrier Common Line Access service per minute charges.

F. As ordered by the Commission in Docket No. 90-626-C, Order No. 92-89, BellSouth SWA service access minutes which originate from or terminate to BellSouth SWA FGA FX/ONAL services will be excluded from the carrier common line access minute rate.

E3.3 Undertaking of the Company

A. Where the IC is provided with BellSouth SWA service under other sections of this Tariff, the Company will provide the use of Company common lines by an IC for access to end users at rates and charges as set forth in E3.10 following.

B. The BellSouth SWA service provided by the Company includes the BellSouth SWA service provided for both interstate and intrastate communications. The Carrier Common Line Access service rates and charges as set forth in E3.10 following apply to intrastate BellSouth SWA service minutes in accordance with the rate regulations as set forth in E3.9 following.

C. (DELETED) (D)

E3.4 Obligations of the IC

A. The BellSouth SWA service associated with Carrier Common Line Access Service shall be ordered by the IC under other sections of this Tariff.

B. The IC facilities at the IC terminal location of the ordering IC shall provide the necessary on-hook and off-hook supervision.

C. (DELETED) (D)

E3. CARRIER COMMON LINE ACCESS

E3.5 Payment Arrangements

A. The Company will bill the Carrier Common Line Access. The bill day (i.e., the billing date of the bill) in a month for each IC account will be established by the Company. Payment is due from the IC thirty-one days after the bill day date (payment date) or by the next bill date (i.e., same date in the following month as the bill date), whichever is the shortest interval, and is payable in immediately available funds. If such payment date is a Saturday, Sunday or Holiday (i.e., New Year's Day, Independence Day, Labor Day, Thanksgiving Day, Christmas Day, the second Tuesday in November, and a day when Washington's Birthday, Memorial Day or Columbus Day is legally Observed), payment will be due from the IC as follows:

1. If such payment date falls on a Sunday or on a Holiday which is observed on a Monday, the payment date shall be the first non-Holiday day following such Sunday or Holiday. If such payment date falls on a Saturday or on a Holiday which is observed on Tuesday, Wednesday, Thursday or Friday, the payment date shall be the last non-Holiday day preceding such Saturday or Holiday.

B. Further, if any portion of the Carrier Common Line Access payment is received by the Company after the payment date as set forth in A. preceding, or if any portion of the Carrier Common Line Access payment is received by the Company in funds which are not immediately available to the Company, then a late payment penalty shall be due to the Company. The late payment penalty shall be the portion of the Carrier Common Line Access payment not received by the payment date times a late factor. The late factor shall not exceed the rate of one and one half percent per month.

C. In the event a billing dispute concerning a month's Carrier Common Line Access billed to the IC by the Company is resolved in favor of the Company, any payments withheld pending settlement of the dispute shall be subject to the late payment penalty set forth in B. preceding. If the IC disputes the bill on or before the payment date, and pays the undisputed amount on or before the payment date, any late payment charge for the disputed amount will not start until ten days after the payment date. If the billing dispute is resolved in favor of the IC, no late payment will apply to the disputed amount. In addition, if the IC disputes the billed amount and pays the total amount (i.e., the non-disputed amount and the disputed amount) on or before the payment date and the billing dispute is resolved in the favor of the IC, the IC will receive a credit for a disputed amount penalty from the billing entity if the billing dispute is not resolved within ten working days following the payment date or the date the IC furnishes to the billing entity documentation to support its claim plus ten working days, whichever date is the later date. The disputed amount penalty shall be the disputed amount resolved in the IC's favor times a penalty factor.

E3.6 Determination of Usage Subject to Carrier Common Line Access Charges

Except as set forth herein, all BellSouth SWA service provided to the IC will be subject to Carrier Common Line Access Charges.

A. When the IC reports interstate and intrastate use of BellSouth SWA service, the associated Carrier Common Line Access used by the IC for intrastate use will be determined as set forth in E3.9 following.

B. Where BellSouth SWA FGC or BellSouth SWA TSBSA 2 end office switching is provided without Company recording and the IC records minutes of use which will be used to determine Carrier Common Line Access charges (i.e., BellSouth SWA FGC or BellSouth SWA TSBSA 2 operator and calls such as ***line controlled pay station*** sent-paid, operator-DDD, operator-person, collect, credit-card, third number and/or other like calls), the IC shall furnish such minutes of use detail to the Company in a timely manner. If the IC does not furnish the data to the Company, the IC shall identify all BellSouth SWA services which could carry such calls in order for the Company to accumulate the minutes of use through the use of special Company measuring and recording equipment. (C)

C. When access to the local exchange is required to provide an IC (e.g. MTS/BellSouth SWA WATS-type, telex, data, etc.) that uses service a resold Private Line Service, BellSouth SWA service Rates and Regulations, as set forth in E6.7 following will apply. Carrier Common Line Access rates and charges as set forth in E3.10 following apply in accordance with the resale rate regulations as set forth in E3.7 following.

E3.7 Resold Services

A. Where the IC is reselling MTS or MTS-type service(s) on which the Carrier Common Line and BellSouth SWA charges have been assessed, the IC may, at the option of the IC, obtain BellSouth SWA FGA, BellSouth SWA FGB, BellSouth SWA FGD, BellSouth SWA LSBSA or BellSouth SWA TSBSA 1 or BellSouth SWA TSBSA 3 service under this Tariff as set forth in Section E6. following for originating and/or terminating access in the local exchange. Such access group arrangements, whether single lines or trunks or multiline hunt groups or trunk groups, will have Carrier Common Line Access Charges applied as set forth in E3.10 following in accordance with the resale rate regulations set forth in this Section. For purposes of administering this provision:

1. Resold intrastate terminating MTS and MTS-type service(s) shall include collect calls, third number calls and credit card calls where the reseller pays the underlying carrier's service charges; and shall not include interstate minutes of use.

E3. CARRIER COMMON LINE ACCESS

(M)

E3.7 Resold Services (Cont'd) (M)

A. Cont'd (M)

2. Resold intrastate originating MTS and MTS-type service(s) shall not include collect, third number, credit card or interstate minutes of use. (M)

B. When the IC is reselling MTS and/or MTS-type service as set forth in A. preceding, the IC will be charged the Carrier Common Line Access charges in accordance with the resale rate regulations as set forth in D. following if the IC or the provider of the MTS service furnishes documentation of the MTS usage and/or the IC furnishes documentation of the MTS-type usage. Such documentation supplied by the IC shall be supplied each month and shall identify the involved resold MTS and/or MTS-type services. The monthly period used to determine the minutes of use for resold MTS and/or MTS-type service(s) shall be the most recent monthly period for which the IC has received a bill for such resold service(s). This information shall be delivered to the Company, at a location specified by the Company, no later than fifteen days after the bill date shown on the resold MTS and/or MTS-type service bill. If the required information is not received by the Company, the previously reported information, as described preceding, will be used for the next two months. For any subsequent month, no allocation or credit will be made until the required documentation is delivered to the Company by the IC. (M)

C. When the IC utilizes ***BellSouth SWA*** service as set forth in B. preceding, the Company may request a certified copy of the IC's resold MTS and/or MTS-type usage billing from either the IC or the provider of the MTS and/or MTS-type service. Requests for billing will relate back no more than twelve months prior to the current billing period. (T) (M)

D. When the IC is provided an access group to be used in conjunction with the resale of MTS and/or MTS-type services as set forth in A. preceding, subject to the limitation as set forth in E3.2 preceding, and the Company receives the usage information required to calculate the adjustment of Carrier Common Line Access Charges as set forth in B. preceding, the customer will be billed as set forth following, depending upon, respectively, whether the usage is from equal access or non-equal access offices, or a combination of the two. (M)

When the customer is provided with more than one access group in a LATA in association with the resale of MTS and/or MTS-type services, the resold minutes of use will be apportioned as follows: (M)

1. The Company will apportion the resold originating MTS or MTS-type services and originating minutes of use for which resale credit adjustment applies, among the access groups. Such apportionment will be based on the relationship of the originating usage for each access group to the total originating usage for all access groups in the LATA. For purposes of administering this provision: (M)

   a. Resold originating MTS and/or MTS-type services minutes shall be only those attributable to intrastate originating MTS and/or MTS-type minutes and shall not include collect, third number, credit card or interstate minutes of use. (M)

   b. The resale credit adjustment shall apply for resold originating MTS and /or MTS-type services and minutes of use, provided Carrier Common Line and ***BellSouth SWA*** charges have been assessed on such services. (T) (M)

2. The Company will apportion the resold terminating MTS and/or MTS-type services and terminating minutes of use for which resale credit applies, among the access groups. Such apportionment will be based on the relationship of the terminating usage for each access group to the total terminating usage for all access groups in the LATA. For purposes of administering this provision: (M)

   a. Resold terminating MTS and/or MTS-type services minutes shall be only those attributable to intrastate terminating MTS and/or MTS-type (i.e., collect calls, third number calls, and credit card calls) and shall not include interstate minutes of use or MTS and/or MTS-type minutes of use paid for by another party. (M)

   b. The resale credit adjustment shall apply for resold terminating MTS and MTS-type services and minutes of use, provided Carrier Common Line and ***BellSouth SWA*** charges have been assessed on such services. (T) (M)

3. In order for the rate regulations to apply as set forth following, the access groups and the resold MTS and/or MTS-type services must be provided in the same state (except when the same extended area service arrangement is provided in two different states by the same company) in the same exchange, provided by the same Company and connected directly or indirectly. For those exchanges that encompass more than one state, the IC shall report the information by state within the exchange. (M)

4. Each of the access group arrangements used by the IC in association with the resold MTS and/or MTS-type services must be connected either directly or indirectly to the IC designated premises at which the resold MTS and/or MTS-type services are terminated. Direct connections are those arrangements where the access groups and resold MTS and/or MTS-type services are terminated at the same IC designated premises. (M)

   Indirect originating connections are those arrangements where the access groups and the resold originating MTS and/or MTS-type services are physically located at different IC designated premises in the same exchange. Such different IC (M)

E3. CARRIER COMMON LINE ACCESS

(M)

E3.7 Resold Services (Cont'd)

(M)

D. Cont'd

(M)

4. Cont'd

(M)

designated premises are connected by facilities that permit a call to flow from access groups to resold MTS and/or MTS-type services.

(M)

Indirect terminating connections are those arrangements where the access groups and resold terminating MTS and/or MTS-type services are physically located at different IC designated premises in the same exchange. Such different IC designated premises are connected by facilities that permit a call to flow from resold terminating MTS and/or MTS-type services to access groups.

(M)

5. The adjustments as set forth following will be computed separately for each access group.

(M)

6. Access Groups - Non Equal Access Offices Only

(M)

a. When all the usage on an access group originates from and/or terminates at end offices that have not been converted to equal access the Access minutes will be multiplied by .65 and then multiplied by the Carrier Common Line charge as set forth in E3.10 following. The access minutes which will be subject to Carrier Common Line Access Service charges will be the adjusted terminating intrastate access minutes plus the adjusted originating intrastate access minutes of such access groups.

(M)

b. The adjusted terminating access minutes will be the terminating intrastate access minutes less the reported resold terminating MTS and/or MTS-type service minutes of use as set forth preceding; but not less than zero. The adjusted originating access minutes will be the originating intrastate access minutes less the reported resold originating MTS and/or MTS-type service minutes of use as set forth preceding; but not less than zero.

(M)

7. Access Groups - Equal Access Offices Only

(M)

a. When all the usage on an access group originates from and/or terminates at end offices that have been converted to equal access the Access Charge per minute as set forth in E3.10. following will apply. The minutes billed Carrier Common Line Access Service charges will be the adjusted terminating intrastate access minutes and the adjusted originating intrastate access minutes for such access groups.

(M)

b. The adjusted terminating access minutes will be the terminating intrastate access minutes less the reported resold terminating MTS and/or MTS-type service minutes of use as set forth preceding; but not less than zero. The adjusted originating access minutes will be the originating intrastate access minutes less the reported resold originating MTS and/or MTS-type service minutes of use; but not less than zero.

(M)

8. Access Groups - Non Equal Access and Equal Access Offices

(M)

a. When an access group has usage that originates from and/or terminates at both end offices that have been converted to equal access and end offices that have not been converted, both premium and nonpremium rates will apply respectively. The minutes billed Carrier Common Line Access Service charges will be the adjusted terminating intrastate access minutes plus the adjusted originating intrastate access minutes for such access groups.

(M)

b. The adjusted terminating access minutes will be the terminating intrastate access minutes less the reported resold terminating MTS and/or MTS-type service minutes of use as set forth preceding; but not less than zero. The adjusted originating access minutes will be the originating intrastate access minutes less the reported resold originating MTS and/or MTS-type service minutes of use as set forth preceding; but not less than zero.

(M)

c. The adjusted originating access minutes and the adjusted terminating access minutes will be apportioned between premium and non premium access minutes using end-office specific usage data when available, or when usage data are not available, the premium and non premium ratios developed as set forth in E6.7.1.A. following. The Premium and Nonpremium rates will apply to the respective premium and nonpremium access minutes determined in this manner.

(M)

9. The adjustment as set forth in 6., 7. and 8. preceding will be made to the involved IC account no later than either the next bill date, or the one subsequent to that, depending on when the usage report is obtained.

(M)

10. When the MTS-type and/or MTS usage is shown in hours, the number of hours shall be multiplied by sixty to develop the associated MTS-type and/or MTS minutes of use. If the MTS-type and/or MTS usage is shown in a unit that does not show hours or minutes, the IC shall provide a factor to convert the shown units to minutes.

(M)

11. The adjustment as set forth in 6., 7., 8. and 9. preceding will be made to the involved IC account after making the adjustments to the IC account as set forth in E3.9 following.

(M)

Material previously appearing on this page now appears on page(s) 1 and 1.1 of this section.
Material appearing on this page previously appeared on page(s) 3.2, 3.3 and 4 of this section.

E3. CARRIER COMMON LINE ACCESS

E3.8 (DELETED) (D)

E3. CARRIER COMMON LINE ACCESS

E3.9 Rate Regulations

A. The Carrier Common Line Charges will be billed per access minute to each IC BellSouth SWA service provided under this Tariff in accordance with the regulations as set forth following except as set forth in E.3.7.D. preceding and D. following.

B. When access minutes are used to determine the Carrier Common Line Charges, they will be accumulated using call detail recorded by Company equipment except as set forth in C. following and BellSouth SWA FGC 1 or BellSouth SWA TSBSA 2 operator and automated operator services systems call detail such as ***line controlled pay station*** sent-paid, operator-DDD, operator-person, collect, credit-card, third number and/or other like calls recorded by the IC. The Company measuring and recording equipment, except as set forth in C. following, will be associated with end office or local tandem switching equipment and will record each originating and terminating access minute where answer supervision is received. The accumulated access minutes will be summed on a line by line basis, by line group or by end office, whichever type of account is used by the Company, for each IC and then rounded to the nearest minute. For BellSouth SWA FGA FX/ONAL, the access minutes will be reported on a line by line basis. (C)

C. When Carrier Common Line Access service is provided in association with BellSouth SWA FGA, BellSouth SWA FGB, BellSouth SWA LSBSA and BellSouth SWA TSBSA 1 service in Company end offices that are not equipped for measurement capabilities, an assumed average access minutes will be used to determine the Carrier Common Line charges. The assumed average access minutes are as set forth in E6.7.8 following.

D. When the IC reports interstate and intrastate use of in service BellSouth SWA service, the Carrier Common Line Access Charges will be billed only to intrastate BellSouth SWA service access minutes based on the data reported by the IC as set forth in E2.3.14, except where the Company is billing according to actuals by jurisdiction. The intrastate BellSouth SWA service, access minutes will, after adjustment as set forth in E.3.7.D. preceding, when necessary, be used to determine the Carrier Common Line Charges as set forth in E. following.

E. After the adjustments as set forth in E3.7.D. and D. preceding have been applied, when necessary, to the BellSouth SWA service access minutes, charges for the involved IC account will be determined as follows:

1. Access minutes for all premium rated BellSouth SWA service subject to Carrier Common Line charges will be multiplied by the Premium Access per minute rate as set forth in E3.10 following.
2. As ordered by the Commission in Docket No. 90-626-C, Order No. 92-89, no usage rates apply to access minutes (measured or assumed) generated by BellSouth SWA FGA FX/ONAL services.
3. When an IC is provided BellSouth SWA FGA or BellSouth SWA FGB service to an entry switch (i.e., the dial tone office for BellSouth SWA FGA and access tandem for BellSouth SWA FGB), and any end office which has access to or from that entry switch is equipped with equal access capabilities, the premium and non premium rates for the BellSouth SWA FGA or BellSouth SWA FGB service will apply in the following manner:
   a. All access minutes that originate from or terminate at the equal access end office(s) will be billed at premium rates. Access minutes that originate from or terminate at end offices not equipped with equal access capabilities will be billed non premium rates. Non premium usage rates will apply as follows depending on the type of service.
   b. The number of access minutes to be rated as premium access minutes is determined as follows:
      (1) Where end office specific usage data is available, premium rates apply to the measured access minutes originating from or terminating at the equal access end office(s).
      (2) Where end office specific usage data is not available, the total usage measured at the entry switch will be apportioned between premium and non premium access minutes in the following manner. First, develop the ratio of the number of subscriber lines (i.e., exchange service lines and ESSX® service lines) in the local calling area of the entry switch, (as defined in the local and/or general exchange service tariff), that are served by the equal access end office(s) to the total number of subscriber lines in that local calling area. Then apply this percentage to the total number of originating access minutes to determine the usage to be billed at premium rates, unless adjusted as set forth in (3) following.

Note 1: Except where indicated herein, references to BellSouth SWA FGs will also include the applicable BellSouth SWA Basic Serving Arrangement as detailed in the matrix in E6.1.3.A. (e.g., the term BellSouth SWA FGA represents both BellSouth SWA FGA and BellSouth SWA LSBSA).

E3. CARRIER COMMON LINE ACCESS

(M)

E3.9 Rate Regulations (Cont'd) (M)

E. (Cont'd)[1] (T) (M)

3. (Cont'd)

b. (Cont'd) (M)

(3) Where ***BellSouth SWA*** FGD service is provided to an IC in an end office(s) where ***BellSouth SWA*** FGA or ***BellSouth SWA*** FGB premium access minutes have been determined in accordance with (2) preceding, such premium access minutes will be adjusted in the following manner. For each ***BellSouth SWA*** FGD access minute originating from or terminating at that end office, the originating or terminating ***BellSouth SWA*** FGA or ***BellSouth SWA*** FGB premium access minutes determined as set forth in (2) preceding will be reduced on a one for one basis, but in no event shall the reduction exceed the total number of ***BellSouth SWA*** FGA of ***BellSouth SWA*** FGB premium access minutes originating from or terminating at that end office. The IC will be billed for the revised number of premium access minutes. (T) (M)

F. Carrier Common Line Access Charges shall not be reduced as set forth in E3.7 preceding unless ***BellSouth SWA*** charges as set forth in Section E6. following are applied to the IC's ***BellSouth SWA*** services. (T) (M)

G. Terminating premium access per minute charge(s) apply to:

- all terminating access minutes of use;
- all originating access minutes of use associated with calls placed to 700, 800, and 900 numbers, less the percentage of originating access minutes of use reported by the IC, as set forth following, that are associated with calls placed to 700, 800, and 900 numbers that terminate in a ***BellSouth SWA*** service that is assessed Carrier Common Line Access service charges. (T) (M)

For originating access minutes of use associated with calls placed to 700, 800, and 900 numbers which terminate on a ***BellSouth SWA*** service assessed Carrier Common Line Access Service charges, the IC shall report as follows: On or before the fifteenth day of each March, June, September and December the IC shall provide the Company a report of the percentage of total intrastate 700, 800, and 900 originating minutes of use that will terminate in a ***BellSouth SWA*** service that is assessed Carrier Common Line Access Service charges for the forthcoming quarter. The reported percentage will be used by the Company to determine the IC's current monthly bill for the originating minutes of use for which the report was provided as set forth in I. following. The IC reported percentage should reflect any under or over estimate in the prior quarter. In the event the IC does not supply a report, the Company will assume the percentage to be the same as that provided in the previous quarterly report. (T) (M)

If a dispute arises concerning the IC provided quarterly percentage report, the Company may request the IC to provide the data the IC used to determine the percentage. The IC shall keep records from which the reported percentage credit can be ascertained. Upon request of the Company, the IC shall make records available for inspection as reasonably necessary for purposes of verification of the percentages and shall supply the data within thirty days of the Company's request. The Company will not request such data more that twice a year. (M)

H. The originating premium access or non-premium access, per minute charge(s) apply to all originating access minutes of use:

- less all originating access minutes of use associated with calls placed to 700, 800, and 900 numbers;
- plus all originating access minutes of use associated with calls placed to 700, 800, and 900 numbers for which the customer furnishes a report of the percentage of minutes that terminate in a ***BellSouth SWA*** service that is assessed Carrier Common Line Access service charges, and for which a corresponding reduction in the number of terminating access minutes of use has been made as set forth in G. preceding. (T) (M)

Note 1: Except where indicated herein, references to ***BellSouth SWA FGs*** will also include the applicable ***BellSouth SWA*** Basic Serving Arrangement as detailed in the matrix of E6.1.3.A. (e.g., the term ***BellSouth SWA*** FGA represents both ***BellSouth SWA*** FGA and ***BellSouth SWA*** LSBSA). (T) (M)

Material previously appearing on this page now appears on page(s) 3 of this section.
Material appearing on this page previously appeared on page(s) 7 and 8 of this section.

E3. CARRIER COMMON LINE ACCESS

E3.10 Rates and Charges

A. The rate for Carrier Common Line Access is:

1. Originating Carrier Common Line

	Rate	USOC	
(a) Originating Access Minute	**$.000000**	**NA**	
2. Terminating Carrier Common Line			
(a) Terminating Access Minute	**.000000**	**NA**	(R)

E3. CARRIER COMMON LINE ACCESS

(M)

Material previously appearing on this page now appears on page(s) 3.1 and 3.2 of this section.

E3. CARRIER COMMON LINE ACCESS

(DELETED) (D)

E3. CARRIER COMMON LINE ACCESS

(DELETED) (D)

E3. CARRIER COMMON LINE ACCESS

(DELETED) (D)

E3. CARRIER COMMON LINE ACCESS

(M)

Material previously appearing on this page now appears on page(s) 3.2 of this section.

E3. CARRIER COMMON LINE ACCESS

(M)

Material previously appearing on this page now appears on page(s) 3.3 of this section.

E3. CARRIER COMMON LINE ACCESS

(M)

Material previously appearing on this page now appears on page(s) 3.3 and 4 of this section.

OFFICIAL APPROVED VERSION, RELEASED BY BSTHQ

E4. END USER ACCESS

CONTENTS

E4.1 General Description 1
E4.2 Limitations 1
E4.3 Undertaking of the Telephone Company 1
E4.4 Obligations of the End User and the IC 1
E4.5 Payment Arrangements and Credit Allowances 2
E4.6 Rate Regulations 3
E4.7 Rates and Charges 4

8em00625 REPRO DATE: 02/13/97 REPRO TIME: 11:11 AM

E4. End User Access (N)

The Company will provide End User Access Service (End User Access) to end users who obtain local telephone exchange service from the Company under its general and/or local exchange tariffs. (N)

E4.1 General Description (N)

A. End User Access provides for the use of an End User Common Line (EUCL) by an end user to make and receive intrastate calls. (N)

E4.2 Limitations (N)

A. A telephone number is not provided with End User Access. (N)

B. Detail billing is not provided with End User Access. (N)

C. Directory listings are not included with End User Access. (N)

D. Intercept arrangements are not included with End User Access. (N)

E4.3 Undertaking of the Telephone Company (N)

A. The Company will provide use of an EUCL at rates and charges as set forth in E4.7. following, as follows: (N)

1. Use of an EUCL by an end user for access to intrastate access services provided under this tariff. Such use will be provided when an end user obtains local telephone exchange service and includes the use of the line between the end user premises and the central office which normally serves the end user premises. (N)
2. The Company will be responsible for contacts and arrangements with end users for EUCL charges. (N)

E4.4 Obligations of the End User and the IC (N)

A. The end user, when it orders local telephone exchange service, authorizes the Company to provide End User Access except for local telephone exchange service where a waiver of the End User Access charges has been granted by the appropriate state regulatory agency. (N)

B. The end user shall be responsible for all contacts, arrangements and charges with the IC or other entity concerning the services or arrangements accessed or terminated by the EUCL. (N)

E4. End User Access (N)

E4.5 Payment Arrangements and Credit Allowances (N)

A. Minimum Period (N)

The minimum period for which EUCL End User Access is provided to an end user and for which charges are applicable is the same as that in the general and/or local exchange tariffs for the associated local exchange telephone service. (N)

B. Cancellation of Application (N)

End User Access is cancelled when the order for the associated local telephone exchange service is cancelled. No cancellation charges apply. (N)

C. Changes to Orders (N)

When changes are made to orders for the local telephone exchange service associated with End User Access, any necessary changes will be made for End User Access. No charges will apply. (N)

D. Allowance for Interruptions (N)

When there is an interruption to an EUCL provided for the use of an end user, the credit allowance for interruptions as set forth in E2.2.4. preceding apply. (N)

E. Temporary Suspension of Service (N)

When an end user temporarily suspends its local exchange service which is associated with EUCL, one-half of the EUCL per month charge will be temporarily suspended for the time period the local exchange service is suspended. (N)

E4. END USER ACCESS

E4.6 Rate Regulations

A. EUCL monthly charges will be billed to the end user of the associated local telephone exchange service.

B. For each local telephone exchange service provided as residential service under the general and/or local exchange service tariffs, the EUCL Residence-Individual-Line or trunk rate as set forth in E4.7 following applies.

C. For ***Centrex Type*** Services where the rates are stated on the basis of discrete simulated paths to the exchange network, each such path shall be counted as an ***Centrex Type*** Services Common Line and the rates as set forth in E4.7 shall apply. (C)

For Dormitory Type (Residence) Service, the individual line or trunk EUCL residential rate as set forth in E4.7 following applies.

D. For each local telephone exchange service provided as a multiparty service under the general and/or local exchange service tariffs, each party is deemed to be a user of an EUCL and the EUCL Residence or Business-party rate, as appropriate, as set forth in E4.7 following applies.

E. For each local telephone exchange service provided as semi-public service under the general and/or local exchange service tariffs, the EUCL Residence or Business-Semi-public rate, as appropriate, as set forth in E4.7 following applies.

F. For each local telephone exchange service provided under the general and/or local exchange service tariffs other than those specified in B., C., D. and E. preceding, the EUCL Business-Individual line or trunk rate as set forth in E4.7 following applies.

E4. END USER ACCESS

E4.7 Rates and Charges

A. The rates for End User Access are:

1. End User Common Line (EUCL)
   a. Residence
      (1) Rates

		Monthly Rate	USOC	
(a)	Individual line or trunk, each	**$-**	**CAS**	
(b)	Two-party, each party	-	**CAS**	
(c)	Four-party, each party	-	**CAS**	
(d)	Semi-public line, each	-	**CAS**	

   b. Business
      (1) Rates

(a)	Individual line or trunk, each	-	**CAS**	
(b)	Two-party, each party	-	**CAS**	
(c)	Four-party, each party	-	**CAS**	
(d)	***Centrex Type*** Services common line, each	-	**CAS**	(C)
(e)	Semi-public line, each	-	**CAS**	

E5. ORDERING OPTIONS FOR BELLSOUTH SWA AND SPECIAL ACCESS (A.K.A. BELLSOUTH SPA) SERVICE

CONTENTS

E5.1	**General**	1	
E5.1.1	Scope	1	
E5.1.2	Ordering Conditions	1	
E5.1.3	Provision of Other Services	1.1	(T)
E5.1.4	Special Construction	2	
E5.2	**Access Order**	2	
E5.2.1	Provision of Service	2	
E5.2.2	Access Order Modifications	4	
E5.2.3	Cancellation of an Access Order	6	
E5.2.4	Selection of Facilities For Access Orders	6.2	
E5.2.5	Minimum Period	6.2	
E5.2.6	Minimum Period Charges	7	
E5.2.7	Shared Use Facilities	7.1	
E5.2.8	BellSouth SWA Service to Cellular Interconnections	7.1	
E5.3	**Available Inventory**	8	
E5.4	**Shared Network Arrangement**	8	
E5.4.1	General	8	
E5.5	**Reserved for Future Use**	8	
E5.6	**Reserved for Future Use**	8	

E5. ORDERING OPTIONS FOR BELLSOUTH SWA AND SPECIAL ACCESS (A.K.A. BELLSOUTH SPA) SERVICE (T)

CONTENTS

(DELETED) (D)

(Deleted) (D)

(Deleted) (D)

(Deleted) (D)

Material previously appearing on this page now appears on page(s) 1 of this section.

E5. ORDERING OPTIONS FOR BellSouth SWA AND SPECIAL ACCESS (a.k.a. BellSouth SPA) SERVICE

E5.1 General

E5.1.1 Scope

A. This section sets forth the regulations and order related charges for Access Orders and Planned Facilities Orders for BellSouth SWA and Special Access (a.k.a. BellSouth SPA) services. These charges are in addition to other applicable charges as set forth in other sections of this Tariff.

B. An Access Order is an order to provide the IC with BellSouth SWA service, Fast Packet Access services, Special Access (a.k.a. BellSouth SPA) service or to provide changes to existing services. A Planned Facilities Order is an order to make facilities available on an established activation date for an IC's future Access Service needs. It is an option available to the IC to assure the availability of facilities at the required time.

E5.1.2 Ordering Conditions

A. An IC may order any number of services of the same type and between the same location on a single Access Order. All details for services for a particular order must be identical except for multipoint service.

B. The IC shall provide all information necessary for BellSouth to provide and bill for the requested service. In addition to the order information required in E5.2 following, the IC must also provide:

- Customer name and premises address(s).
- Billing name and address (when different from customer name and address).
- Customer contact name(s) and telephone number(s) for the following provisioning activities: order negotiation, order confirmation, interactive design, installation and billing.

C. A customer that orders services from this Tariff as an Enhanced Service Provider (ESP), must provide a signed statement that it meets the ESP definition as provided in E2.6.

D. BellSouth SWA service orders for BellSouth SWA FGA and BellSouth SWA LSBSA shall be in lines.

BellSouth SWA service orders for BellSouth SWA FGB, BellSouth SWA FGC, and BellSouth SWA FGD, and BellSouth SWA TSBSA 1, BellSouth SWA TSBSA 2 and BellSouth SWA TSBSA 3 shall be in trunks.

E. Dedicated Access Line Special Access (a.k.a. BellSouth SPA) service must be ordered in lines for use with a BellSouth SWA FGC, BellSouth SWA FGD, BellSouth SWA TSBSA 2 or BellSouth SWA TSBSA 3 service which is in service or on order.

F. The day upon which the customer has provided to BellSouth a firm commitment for the service and complete and accurate information to allow for the processing of the Access Order ***by three o'clock p.m. Eastern Standard Time (EST)*** is the Application Date. BellSouth will release an optional initial Pending Order Confirmation which will include the BellSouth order number and circuit identification. At the customer's request, when the BellSouth facility availability is verified, either a Firm Order Confirmation, which will include critical date information, or a Design and Ordering Confirmation, which will include design as well as critical date information, will be released. Critical date information will include the Service Date. The Service Date is the date service is to be made available to the customer and billing will commence. (C)

A Pending Order Confirmation is available for orders for BellSouth-provided switched access dedicated transport services, where ordered separately from other switched access services, and for BellSouth-provided special access services. A Design and Ordering Confirmation is not available for orders submitted by end users. A Pending Order Confirmation and a Design and Ordering Confirmation are not available for orders for services provided jointly with another Exchange Telephone Company.

G. The time required to provision the service (i.e., the interval between the Application Date and the Service Date) is known as the service interval. Such intervals will be established in accordance with published service date interval guidelines which are available to ICs upon request whether the IC's service is subject to standard or negotiated intervals. The IC may request a service date other than that established pursuant to the service date interval guidelines, and the Company, where possible, will establish the service date in accordance with such request, subject however, to other applicable provisions of this Tariff.

H. An IC who converts from an existing BellSouth FG service to an equivalent unbundled service (i.e., BellSouth SWA FGA to BellSouth SWA LSBSA, BellSouth SWA FGB to BellSouth SWA TSBSA 1, BellSouth SWA FGC to BellSouth SWA TSBSA 2, and BellSouth SWA FGD to BellSouth SWA TSBSA 3) shall do so on no lower than an end office level. The Company and the IC will work cooperatively to accomplish these conversions.

Note 1: Access Orders received after three o'clock p.m. EST will be processed the next business day, which will be the Application Date. (N)

E5. ORDERING OPTIONS FOR BellSouth SWA AND SPECIAL ACCESS (a.k.a. BellSouth SPA) SERVICE

E5.1 General (Cont'd)

E5.1.2 Ordering Conditions (Cont'd)

I. (DELETED) (D)

E5.1.3 Provision of Other Services

A. Testing Service, Additional Labor, and Special Facilities Routing shall be ordered with an Access Order as set forth in B. following. The rates and charges for these services, as set forth in other sections of this Tariff, will apply in addition to the ordering charges set forth in this section and the rates and charges for the Access Service with which they are associated.

B. With the agreement of the Company, the items listed in A. preceding may subsequently be added to the order at any time, up to and including the service date for the Access Service. When added subsequently, charges for a design change as set forth in E5.2.2 following will apply when an engineering review is required.

C. Additional Engineering is not an ordering option, but will be applied to an Access Order when the Company determines that Additional Engineering is necessary to accommodate an IC request. Additional Engineering will only be required as set forth in E13.1 following. When it is required, the IC will be so notified and will be furnished with a written statement setting forth the justification for the Additional Engineering as well as an estimate of the charges. If the IC agrees to the Additional Engineering, a firm order will be established. If the IC does not want the service or facilities after being notified that Additional Engineering of Company facilities is required, the order will be withdrawn and no charges will apply. Once a firm order has been established, the total charge to the IC for the Additional Engineering may not exceed the estimated amount by more than 10%.

D. The regulations, rates and charges for Additional Engineering are as set forth in E13.1 following and are in addition to the regulations, rates and charges specified in this section.

E5. ORDERING OPTIONS FOR BELLSOUTH SWA AND SPECIAL ACCESS (A.K.A. BELLSOUTH SPA) SERVICE (T)

E5.1 General (Cont'd)

E5.1.4 Special Construction

A. Special Construction is not an ordering option, but may be applied to an Access Order when the Company determines special construction is necessary to accommodate an IC request. When special construction is required, the IC will be so notified and will be furnished with a written statement setting forth the justification for the special construction as well as an estimate of the charges. If the IC agrees to the special construction, a firm order will be established. If the IC does not want the service or facilities after being notified that special construction is required, the order will be withdrawn and no charges will apply. The regulations, rates and charges for Special Construction are set forth in E14. following and are in addition to the regulations, rates and charges specified in this section.

E5.2 Access Order

E5.2.1 Provision of Service

A. General

An Access Order is used by the Company to provide to an IC Access Service as follows:

1. ***BellSouth SWA*** services as set forth in E6. following, (T)
2. Special Access ***(a.k.a. BellSouth SPA)*** services as set forth in E7. following, and (T)
3. Other services as set forth in E5.1.3 preceding.

B. Information Required

When placing an order for Access Service, the IC shall provide, at a minimum, the following information:

1. For ***BellSouth SWA FGA*** and ***BellSouth SWA*** LSBSA service, the IC shall specify: (T)
   a. Number of lines
   b. First point of switching (i.e., the dial tone office)
   c. Directionality of the service
   d. ***BellSouth SWA*** Transport Options, if any (T)
   e. Local Switching Options, if any
   f. Whether the off-hook supervisory signaling is to be provided by the IC's equipment or if it is to be forwarded by the IC's equipment when the called party answers
   g. If the service is to be provided with an extension to a different exchange, (the IC's premises at which the extension is to be terminated)
   h. Percent Interstate Usage (PIU) as specified in E2.3.14 preceding
   i. Provide Connecting Facility Assignment (CFA), if associated with a high capacity facility
   j. For Switched Local Channel and ***BellSouth SWA*** Dedicated Interoffice Channel, the capacity (T)
2. For ***BellSouth SWA FGB*** and ***BellSouth SWA*** TSBSA 1 service, the IC shall specify: (T)
   a. The number of trunks
   b. For trunks to an end office, the end office
   c. For trunks to an Access Tandem
      (1) The Access Tandem Switch

E5. ORDERING OPTIONS FOR BellSouth SWA AND SPECIAL ACCESS SERVICE

E5.2 Access Order (Cont'd)

E5.2.1 Provision of Service (Cont'd)

B. Information Required (Cont'd)

2. (Cont'd)

c. For trunks to an Access Tandem (Cont'd)

(2) An estimate of the amount of traffic it will generate to and/or from each end office subtending the access tandem (to assist the Company in its own efforts to project further facility requirements.)

d. BellSouth SWA Transport Options, if any

e. Local Switching Options (including BSEs), if any

f. For terminating only access, whether the trunks are to be arranged in trunk group arrangements or provided as single trunks

g. The traffic type using the categories specified in ***E6.1.1. of this Tariff*** to enable efficient provisioning and billing functions (T)

h. Percent Interstate Usage (PIU) as specified in E2.3.14 ***of this Tariff*** (T)

i. Provide Connecting Facility Assignment (CFA), if associated with a high capacity facility

j. For ***BellSouth SWA*** Local Channel and BellSouth SWA Dedicated Interoffice Channel, the capacity (T)

k. **(DELETED)** (D)

(M)

Material previously appearing on this page now appears on page(s) 2.1 of this section.

E5. ORDERING OPTIONS FOR BellSouth SWA AND SPECIAL ACCESS (a.k.a. BellSouth SPA) SERVICE

E5.2 Access Order (Cont'd)

E5.2.1 Provision of Service (Cont'd)

B. Information Required (Cont'd)

3. For BellSouth SWA FGC, BellSouth SWA FGD and BellSouth SWA TSBSA 2 or BellSouth SWA TSBSA 3 service, the IC shall specify: (M)(T)

   a. The number of BellSouth SWA FGD and BellSouth SWA TSBSA 3 trunks

      (1) for trunks ordered to an end office, the end office

      (2) for trunks ordered to an Access Tandem, the Access Tandem Switch

      (3) for trunks with coin sent-paid capability ordered to a TOPS tandem, the TOPS Tandem Switch

      (4) an estimate of the amount of traffic it will generate to and/or from each end office subtending the access and/or TOPS tandem (to assist the Company in its own efforts to project further facility requirements).

   b. BellSouth SWA Transport Options, if any

   c. Local Switching Options (including BSEs), if any

   d. The traffic type using the categories specified in ***E6.1.1 of this Tariff***, to enable efficient provisions and billing functions. (T)

   e. Provide Connecting Facility Assignment (CFA), if associated with a high capacity facility.

   f. For ***BellSouth SWA*** Local Channel and BellSouth SWA Dedicated Interoffice Channel, the capacity. (T)

   g. **(DELETED)** (D)

   The coin capable end offices and TOPS tandem switches are identified in the Wire Center Section of the National Exchange Carrier Association, Inc., Tariff F.C.C. No. 4.

E5. ORDERING OPTIONS FOR BELLSOUTH SWA AND SPECIAL ACCESS (A.K.A. BELLSOUTH SPA) SERVICE (T)

E5.2 Access Order (Cont'd)

E5.2.1 Provision of Service (Cont'd)

B. Information Required (Cont'd)

4. For all Special Access ***(a.k.a. BellSouth SPA)*** services, the IC must specify the IC terminal location and end user premises or Hub, the channel type (e.g., Video ***(a.k.a. BellSouth SPA Video)***, Voice Grade ***(a.k.a. BellSouth SPA DS0 VG)***, High Capacity ***(a.k.a. BellSouth SPA High Capacity)***, etc.) and the channel interface, technical specifications package and options desired. For multipoint services, the channel interface at each end user premises may, at the request of the end user, be different but all such interfaces shall be compatible. (T)

5. For ***BellSouth SWA*** Dedicated Transport services, the IC must specify the Facility Hubs involved, if applicable, the channel type (e.g. ***BellSouth SWA VG***, ***BellSouth SWA DS1***, etc.) the channel interface and any options desired. (T)

6. Dedicated Access Line Service must be ordered for use with ***BellSouth SWA*** FGC, ***BellSouth SWA*** FGD, ***BellSouth SWA*** TSBSA 2 or ***BellSouth SWA TSBSA*** 3 service. The IC must specify the end user premises, the channel interface (i.e., two-wire or four-wire), the type of calling (i.e., originating or terminating) and the type of supervisory signaling. When the necessary screening functions are not provided at the end user serving wire center, the Company will use the nearest wire center where screening capacity exists. (T)

   The IC must also specify that the Dedicated Access Line is to be provided with an extension in the same or a different LATA, if applicable. When such an extension is specified on the order, the IC must also specify either (1) the end user premises in the LATA (for an intraLATA extension) or (2) the IC's terminal location (for an extension in a different LATA) to which such extension is to be provided.

7. The IC must always specify how Special Access ***(a.k.a. BellSouth SPA)*** is to be used so that the Company may determine the appropriate application of the Special Access ***(a.k.a. BellSouth SPA)*** service surcharge. (T)

8. ***BellSouth SWA*** 500 Service (T)

   For ***BellSouth SWA*** 500 service, as described in E6.2 following, the IC shall order in the same manner which is set forth preceding for ordering ***BellSouth SWA FGC, BellSouth SWA FGD, BellSouth SWA*** TSBSA 2 or ***BellSouth SWA TSBSA*** 3 except that ICs must order ***BellSouth SWA*** FGC, ***BellSouth SWA*** FGD, ***BellSouth SWA*** TSBSA 2 or ***BellSouth SWA TSBSA*** 3 to all end offices within the IC designated LATA(s), either through the tandem or by direct connections to the end office. (T)

   The IC is also responsible for reporting to the Company the percent interstate usage (PIU) for ***BellSouth SWA*** 500 service as set forth in E2.3.14 preceding. (T)

9. ***BellSouth SWA 8XX Toll Free Dialing*** Ten Digit Screening Service (T)

   For ***BellSouth SWA 8XX Toll Free Dialing*** Ten Digit Screening service as described in E6.2.5 following, the IC shall order in the same manner which is set forth preceding for ordering ***BellSouth SWA FGD*** and ***BellSouth SWA*** TSBSA 3 except that the IC must order ***BellSouth SWA*** FGD or ***BellSouth SWA*** TSBSA 3 to all access tandems or direct connections to all end offices designated by the Company as Service Switching Points for ***BellSouth SWA 8XX Toll Free Dialing*** Ten Digit Screening service within the LATA. Direct trunk routes cannot be provided unless the end office is equipped to provide the IC identification function. All traffic originating from end offices not equipped to provide the IC identification function require routing via the serving access tandem at which the function is available. Service must be ordered accordingly. (T)

   The IC is also responsible for reporting to the Company the percent interstate usage (PIU) for ***BellSouth SWA 8XX Toll Free Dialing*** Ten Digit Screening service as set forth in E2.3.14 preceding. (T)

E5. ORDERING OPTIONS FOR BELLSOUTH SWA AND SPECIAL ACCESS (A.K.A. BELLSOUTH SPA) SERVICE (T)

E5.2 Access Order (Cont'd)

E5.2.1 Provision of Service (Cont'd)

B. Information Required (Cont'd)

10. ***BellSouth 8XX Toll Free Dialing*** Number ***Administration*** Service (T)

When ordering ***BellSouth 8XX Toll Free Dialing*** Number ***Administration*** service as described in E13.3.12 following, the IC must, at a minimum, provide the following information to the Company: (T)

- Area of service[1]
- Name(s) of intraLATA and interLATA carrier(s), as applicable
- Access Carrier Name Abbreviation (ACNA) Code of the interLATA and intraLATA carrier, as applicable
- Activation date

When the POTS number is to be delivered to an IC, the IC must provide the full ten digit POTS number to be associated with the 800 number and must indicate to whom the POTS number is to be delivered. In addition, the IC must also provide the POTS numbers associated with the intraLATA portion of ***BellSouth SWA 8XX Toll Free Dialing*** Ten Digit Screening service for subscribers who will use the Company for intraLATA ***BellSouth SWA 8XX Toll Free Dialing*** Ten Digit Screening service. (T)

For the transport of any intraLATA 800 call by the Company, the IC must provide the end user billing information necessary for the Company to bill the appropriate intraLATA rates.

If the IC desires any of the options available with ***BellSouth 8XX Toll Free Dialing*** Number ***Administration*** service as set forth in E13.3.12 following, these must also be specified on the order for service. (T)

11. ***BellSouth SWA 900 Service*** (T)

For ***BellSouth SWA*** 900 service, the IC shall order in the same manner which is set forth preceding for ordering ***BellSouth SWA FGD*** or ***BellSouth SWA*** TSBSA 3 with the following exception. The IC must order ***BellSouth SWA*** FGD or ***BellSouth SWA*** TSBSA 3 to all access tandems or direct connections to all end offices designated by the Company as ***BellSouth SWA*** 900 service screening offices within the LATA. Direct trunk routes cannot be provided unless the end office is equipped to provide the IC identification function. All traffic originating from end offices not equipped to provide the IC identification function will require routing via the access tandem at which the function is available. Service must be ordered accordingly. (T)

When the IC desires activation of a 900 NXX code for 900 NXX screening the IC shall submit an Access Service Request (ASR) whether or not additional capacity is required.

12. When an IC desires ***BellSouth SWA*** service to an end office that is a remote switching office, the IC must order to the host office which controls the remote switching office since all traffic to and/or from a remote switching office must be routed through the host office. (T)

Note 1: The standard area of service is the entire state. Other levels of area of service may be provided with the Customized Area of Service feature.

E5. ORDERING OPTIONS FOR BellSouth SWA AND SPECIAL ACCESS (a.k.a. BellSouth SPA) SERVICE

E5.2 Access Order (Cont'd)

E5.2.1 Provision of Service (Cont'd)

B. Information Required (Cont'd)

13. When ordering BellSouth Operator Transfer Service, the IC shall specify the number of new or additional BellSouth SWA FGC, BellSouth SWA FGD, BellSouth SWA TSBSA 2 or BellSouth SWA TSBSA 3 trunks desired, if any, to carry originating traffic from the BellSouth Operator Services System location to the IC location in each LATA served by the Operator Services System where the IC requests BellSouth Operator Transfer Service.

14. For BellSouth Inward Operator Service (IOS) Access Service, the IC shall specify the number of new or additional BellSouth SWA FGD or BellSouth SWA TSBSA 3 service trunks desired, if any, to carry traffic from the IC's premises to the IOS location, as specified in E18 ***of this Tariff***. (T)

15. For BellSouth SWA FGD and BellSouth SWA TSBSA 3 with BellSouth SWA CCSAC in addition to the information listed in 3. preceding, the IC shall provide: a reference to existing signaling connections or reference to a related CCS***7*** ***S***ignaling ***C***onnection order; BellSouth SWA CCSAC Local Switching options, if any; for BellSouth SWA CCSAC trunks, STP point codes and location identifier codes, circuit identification codes and switch type; and, for CCS***7*** ***S***ignaling ***C***onnections, specification of the level of diversity in its network, as defined in the BellSouth Guidelines to Technical Publication TR-TSV-000905. (T)

16. For BellSouth SWA FGD or BellSouth SWA TSBSA 3 with 64 Clear Channel Capability (CCC), in addition to the information listed in 3. and 4. preceding, the IC shall specify 64 CCC Local Switching Options, if any, with Superframe or Extended Superframe, as specified in E6.1.3.A. and E7.2.9 ***of this Tariff***. (T)

17. The Service Installation Guarantee, as set forth in E2.4.10 ***of this Tariff***, is applicable to specified services offered in this Tariff. The Service Installation Guarantee is applied on a per service order basis for BellSouth SWA services. The Service Installation Guarantee is applied on a per circuit basis for Special Access (a.k.a. BellSouth SPA) services. (T)

18. For BellSouth Billing Name and Address for ANI service, in addition to the ordering conditions set forth in E5.1.2 preceding, the IC shall also provide the following:
    a. The IC's Carrier Identification Code (CIC) or pseudo CIC code and Access Carrier Name Abbreviation (ACNA). In the event the IC does not have such an assignment the IC must contact the Company for this assignment.
    b. A list of Carrier Identification Codes (CICs) or pseudo CIC codes and Access Carrier Name Abbreviation (ACNA) for whom billing services are being performed.
    c. The established Company Carrier Access Billing System (CABS) Account (CO7) number and if no account exists the Company will establish a CO7 account for billing purposes.

19. When ordering BellSouth® Remote Access Service, in addition to subscribing to the service by meeting the conditions set forth in E5.1.2 and E5.2.1.B.1 preceding, the customer shall:
    a. coordinate their access service request through a customer account team;
    b. populate the project field on the access service request with “BST-RAS”; and
    c. negotiate service intervals for BellSouth® Remote Access Service.

® BellSouth is a registered trademark of BellSouth Intellectual Property Corporation

E5. ORDERING OPTIONS FOR BellSouth SWA AND SPECIAL ACCESS (a.k.a. BellSouth SPA) SERVICE

E5.2 Access Order (Cont'd)

E5.2.1 Provision of Service (Cont'd)

C. Traffic Engineering Responsibilities

1. When ordering BellSouth SWA service, the trunks may be determined by the IC in the following manner. For each day the IC shall determine the highest number of trunks in use for a single hour. The IC shall, for same hour period (i.e., busy hour), pick the twenty consecutive business days in a calendar year which add up to the largest number of trunks in use. The IC shall then determine the average busy hour trunks in use figure, for the same hour period, for the consecutive twenty-business day period by twenty. This computation shall be performed for each end office and/or access tandem the IC wishes to serve. If the data to develop a twenty consecutive day period is not available, the IC may use a twenty-day period that contains as many consecutive days as is available.
2. Where the Special Access (a.k.a. BellSouth SPA) service is exempt from the Special Access (a.k.a. BellSouth SPA) surcharge, as set forth in E7.4.2 ***of this Tariff***, the IC shall furnish with the order the certification as set forth in that section. (T)
3. When an IC desires BellSouth SWA service to an end office that is a remote switching office, the IC must order to the host office which controls the remote switching office since all traffic to and/or from a remote switching office must be routed through the host office.
4. The customer shall work cooperatively with the Company to determine the number of CCS7 Signaling Connections and CCS7 Signaling Terminations required to handle its signaling traffic. (N)

E5. ORDERING OPTIONS FOR BellSouth SWA AND SPECIAL ACCESS (a.k.a. BellSouth SPA) SERVICE

E5.2 Access Order (Cont'd)

E5.2.2 Access Order Modifications

A. The IC may request a modification of its Access Order prior to notification by the Company that the service is available for the IC's use, or prior to the service date, whichever is earlier. The Company will make every effort to accommodate a requested modification when it is able to do so with the normal work force assigned to complete such an order within normal business hours. If the modification cannot be made with the normal work force during normal business hours, the Company will notify the IC. If the IC still desires the Access Order modification, the Company will schedule a new service date. All charges for Access Order modification will apply on a per occurrence basis.

B. Any increase in the number of Special Access (a.k.a. BellSouth SPA) service channels, BellSouth SWA service lines, trunks or BellSouth SWA Transport facilities or CCS7 Signaling Connections and CCS7 Signaling Terminations, will be treated as a new Access Order (for the increased amount only).

C. If order modifications are necessary to satisfy the transmission performance for a Special Access (a.k.a. BellSouth SPA) service ordered by an IC, these changes will be made without order modification charges being incurred by the IC.

D. Service Date Change Charge

1. Access Order service dates for installation of new services or rearrangements of existing services may be changed, but the new service date may not exceed the original service date by more than thirty calendar days. When, for any reason, the IC indicates that services cannot be accepted for a period not to exceed thirty calendar days, and the Company accordingly delays the start of service, a Service Date Change Charge will apply. If the IC requested service date is more than thirty calendar days after the original service date, the order will be canceled by the Company and reissued with appropriate cancellation charges applied unless the IC indicates that billing for the service is to commence as set forth in E5.2.3 following. If the Company determines it can accommodate the IC's request without delaying service dates for orders of other ICs, a new service date may be established that is prior to the original standard or negotiated interval service date.

2. Failure to notify the Company prior to the original service date to request a different service date may result in the application of a Service Date Change-Additional Dispatch Charge for installations, moves and rearrangement of services. If a Company technician is dispatched to the IC's premises on the scheduled service date and the IC has failed to notify the Company before three o'clock p.m. EST on the business day prior to the scheduled service date that it wishes to change the service date, the Company will delay the start of service pending negotiations with the IC. If the IC reschedules the service date, a Service Date Change-Additional Dispatch Charge will apply in addition to a Service Date Change Charge as specified in 4(a), following. If the IC cancels the service date, cancellation charges will apply in accordance with terms and conditions for cancellation charges as set forth in E5.2.4 following. Cancellation of the order will not preclude the application of the Service Date Change Charge and Service Date Change-Additional Dispatch Charge assessed for prior occurrences on the same order. (N)

3. A Service Date Change Charge will apply, on a per order per occurrence basis, for each service date changed. ***The Service Date Change-Additional Dispatch Charge will apply for each occurrence of a technician dispatch to the IC's premises when the IC is not ready for service as specified in D.2 preceding. The applicable charges are***: (C)

		Nonrecurring Charge	USOC	
(a)	Service Date Change Charge, per order	**$26.21**	**OMC**	
(b)	Service Date Change-Additional Dispatch Charge, per occurrence	**$150.00**	**OMCAD**	(N)

5. For multiple orders with the same service date for the same customer premises, only one Service Date Change-Additional Dispatch Charge will apply. However, a Service Date Change Charge will apply for each order. (N)

6. Service Installation Guarantees, as set forth in E2.4.10 of this Tariff, are not applicable for Service Date Change Charges. (T)

7. A new service date may be established that is prior to the original service date if the Company determines it can accommodate the IC's request without delaying service date for orders of other ICs. (T)

E. Partial Cancellation Charge

1. Any decrease in the number of ordered Special Access (a.k.a. BellSouth SPA) service channels, BellSouth SWA service lines, trunks or BellSouth SWA Transport Facilities, CCS***7*** ***S***ignaling ***C***onnections or Dedicated Access Lines will be treated as a partial cancellation and the charges as set forth in E5.2.3.D. following will apply.

E5. ORDERING OPTIONS FOR BELLSOUTH SWA AND SPECIAL ACCESS (A.K.A. BELLSOUTH SPA) SERVICE

E5.2 Access Order (Cont'd)

E5.2.2 Access Order Modifications (Cont'd)

F. Design Change Charges

1. The IC may request a design change to the service ordered. A design change is any change to an Access Order which requires engineering review. An engineering review is a review by Company personnel, of the service ordered and the requested changes to determine what changes in the design, if any, are necessary to meet the changes requested by the IC. Design changes include such things as the addition or deletion of optional features, BSEs or functions or a change in the type of BellSouth SWA Transport Termination, type of channel interface, type of Interface Group or technical specification package. Design changes do not include a change of IC terminal location, end user premises, end office switch, BellSouth SWA FG type or Special Access (a.k.a. BellSouth SPA) service channel type. Changes of this nature will require the issuance of a new order and the cancellation of the original order with appropriate cancellation charges applied.
2. Should an IC or end user requested design change be received on a pending access order shall result in the establishment of a new service date that exceeds the original service date by more than thirty days, the IC or end user shall not be required to cancel and reissue a new order, but shall be billed a Design Change Charge and a Service Date Change Charge.
3. The Company will review the requested change, notify the IC whether the change is a design change, if it can be accommodated and if a new service date is required. If the IC authorizes the Company to proceed with the design change, a Design Change Charge will apply. The Design Change Charge will apply on a per order, per occurrence basis, for each order requiring a design change.
4. The applicable charge is:

	Nonrecurring Charge	USOC
(a) Design change charge, per order	**$26.21**	**HZ8**

Service Installation Guarantees, as set forth in E2.4.10 preceding, are not applicable for Design Change Charges.

5. If a change of service date is required, the Service Date Change Charge as set forth in D. preceding will also apply.

G. (DELETED) (D)

E5. ORDERING OPTIONS FOR BELLSOUTH SWA AND SPECIAL ACCESS (A.K.A. BELLSOUTH SPA) SERVICE

E5.2 Access Order (Cont'd)

E5.2.2 Access Order Modifications (Cont'd)

G. (DELETED) (D)

E5. ORDERING OPTIONS FOR BELLSOUTH SWA AND SPECIAL ACCESS (A.K.A. BELLSOUTH SPA) SERVICE (T)

E5.2 Access Order (Cont'd)

E5.2.3 Cancellation of an Access Order

A. An IC may cancel an Access Order for the installation of service at any time prior to the notification by the Company that service is available for the IC's use. The cancellation date is the date the Company receives written or verbal notice from the IC that the order is to be canceled. The verbal notice must be followed by written confirmation within ten days.

If an IC or an IC's end user is unable to accept Access Service within thirty calendar days after the original service date, the IC has the choice of the following options:

1. The Access Order shall be canceled and charges set forth in C. following will apply, or
2. Billing for the service will commence.

In any event, the cancellation date or the date billing is to commence (depending on which option is selected by the IC) shall be the thirty-first day beyond the original service date of the Access Order.

B. When an IC cancels an Access Order for the installation of service, a Cancellation Charge will apply as follows:

1. Costs incurred in conjunction with the provision of ***BellSouth SWA*** or Special Access ***(a.k.a. BellSouth SPA)*** service starts on the Application Date as defined in 4.b. following. (T)
2. When the IC cancels an Access Order prior to the Design Layout Report Date, as defined in 4.b. following, no charges shall apply.
3. When the IC cancels an Access Order on or after the Design Layout Report Date, a charge equal to the estimated costs incurred by the Company shall apply. Such charge is determined as specified in 4. following.
4. Charges applicable as specified in 3. preceding are based on the estimated costs incurred by the Company at the time the order is canceled. The estimated costs incurred are determined based on the following:
   a. Certain Company critical dates are associated with an Access Order provisioning interval. These dates are used by the Company to monitor the progress of the provisioning process. At any point in the Access Order interval the Company is able to determine which critical date was last completed and can thus determine what percentage of the Company's provisioning costs have been incurred as of that critical date.
   b. The critical dates tracked by the Company are as follows:

      Application Date (APP):
      The date the IC provides a firm commitment and sufficient information as detailed in E5.1 preceding to the Company. This is also the order date.

      Scheduled Issue Date (SID):
      The date that the order is to enter the Company's order distribution system.

      Design Layout Report Date (DLRD):
      The date the Design Layout Report is forwarded to the IC.

      Records Issue Date (RID):
      The date that all design and assignment information is to be sent to the central office and installation forces.

      Wired and Office Tested Date (WOT):
      The date by which all intraoffice wiring is to be completed, all plug-ins optioned, aligned, and frame continuity established, and the interoffice facilities, if applicable, tested. In addition, switching equipment, including translation loading, is to be installed and tested.

E5. ORDERING OPTIONS FOR BELLSOUTH SWA AND SPECIAL ACCESS (A.K.A. BELLSOUTH SPA) SERVICE (T)

E5.2 Access Order (Cont'd)

E5.2.3 Cancellation of an Access Order (Cont'd)

B. (Cont'd)

4. (Cont'd)

b. The critical dates tracked by the Company are as follows: (Cont'd)

Plant Test Date (PTD):
The date on which overall testing of the service is to be started.

Engineering Information Report Date (EIRD):
The date the engineering group in another ISS area provides information to the primary engineering group.

Service Date (DD):
The date on which service is to be made available to the IC. This is sometimes referred to as the Due Date.

Designed, Verified, and Assigned Date (DVA):
The date by which field implementation groups must report that all documents and materials have been received.

Frame Continuity Date (FCD):
Date on which frame-to-frame testing must be completed. This is sometimes referred to as the Facility Continuity Check Date.

Loop Assignment and Make-up Date (LAM):
The date by which Local Loop Assignment and Make-up information must be available.

Confirming Design Layout Report Date (CDLRD):
The date the Design Layout Report (DLR) is to be confirmed by the IC.

c. The percentage of the total provisioning cost incurred by the Company at a particular critical date varies by the type of service as shown in d. following.

d. When an IC cancels an order, or part of an Access Order, before the service date, the Company will apply cancellation charges to the order by multiplying all the nonrecurring charges associated with the order, or that part of the order being canceled, by the percentage shown following for the critical date last completed on the order:[1]

e. Cancellation charge percentages applicable based on Company critical dates.

5. Cancellation Charge Percentages

a. Cancellation Charge Percentages Listing No. 1

Type Service/ Critical Dates	**After:** / **Before:**	**APP** / **SID**	**SID** / **LAM**	**LAM** / **EIRD**	**EIRD** / **DLRD**	**DLRD** / **RID**	**RID** / **DVA**	
SPECIAL ACCESS ***(a.k.a BellSouth SPA)***								(T)
WATS ***(a.k.a. BellSouth SPA)***		1.6%	4.7%	6.6%	9.5%	13.2%	18.7%	(T)
Voice Grade ***(a.k.a. BellSouth SPA DSO VG)***		1.6%	4.7%	6.6%	9.5%	13.2%	18.7%	(T)
Telegraph Grade ***(a.k.a. BellSouth SPA Telegraph)***		1.6%	4.8%	8.9%	13.6%	17.0%	22.2%	(T)
Metallic Grade ***(a.k.a. BellSouth SPA Metallic)***		1.6%	4.9%	6.9%	9.8%	13.5%	18.2%	

Note 1: As set forth in E5.2.3.B., when an IC cancels an order prior to the Design Layout Report Date, no cancellation charges shall apply.

E5. ORDERING OPTIONS FOR BellSouth SWA AND SPECIAL ACCESS (a.k.a. BellSouth SPA) SERVICE (T)

E5.2 Access Order (Cont'd)

E5.2.3 Cancellation of an Access Order (Cont'd)

B. (Cont'd)

5. Cancellation Charge Percentages (Cont'd)

a. Cancellation Charge Percentages Listing No. 1 (Cont'd)

Type Service/ Critical Dates	**After:** / **Before:**	**APP** / **SID**	**SID** / **LAM**	**LAM** / **EIRD**	**EIRD** / **DLRD**	**DLRD** / **RID**	**RID** / **DVA**	
High Capacity (a.k.a. BellSouth SPA High Capacity)		12.9%	29.2%	33.1%	35.5%	37.5%	42.9%	(T)
Program Audio (a.k.a. BellSouth SPA Program Audio)		1.4%	4.1%	5.8%	8.3%	11.5%	16.2%	(T)
Digital Data Access (a.k.a. BellSouth SPA DSO Digital Data)		1.5%	4.6%	6.1%	9.2%	13.5%	18.6%	(T)
BellSouth Metro Ethernet Service		11.6%	33.1%	42.9%	44.8%	47.3%	53.1%	(N)
BELLSOUTH SWA								(T)
Trunks or Lines		7.0%	18.9%	23.7%	24.9%	26.3%	35.6%	
BellSouth SWA High Capacity Facilities		12.9%	29.2%	33.1%	35.5%	37.5%	42.9%	(T)
BellSouth Wavelength Service		12.9%	29.2%	33.1%	35.5%	37.5%	42.9%	(T)

b. Cancellation Charge Percentages Listing No. 2

Type Service/ Critical Dates	**After:** / **Before:**	**DVC** / **WOT**	**WOT** / **FCD**	**FCD** / **PTD**	**PTD** / **DD**	**DD**	
SPECIAL ACCESS (a.k.a BellSouth SPA)							(T)
WATS (a.k.a. BellSouth SPA)		33.2%	44.6%	56.6%	83.6%	100.0%	(T)
Voice Grade (a.k.a. BellSouth SPA DSO VG)		33.2%	44.6%	56.6%	83.6%	100.0%	(T)
Telegraph Grade (a.k.a. BellSouth SPA Telegraph)		34.7%	43.9%	56.9%	84.6%	100.0%	(T)
Metallic Grade (a.k.a. BellSouth SPA Metallic)		30.3%	39.7%	53.6%	83.3%	100.0%	(T)
High Capacity (a.k.a. BellSouth SPA High Capacity)		55.7%	66.2%	69.9%	86.2%	100.0%	(T)
Program Audio (a.k.a. BellSouth SPA Program Audio)		28.0%	37.1%	49.5%	80.5%	100.0%	(T)
Digital Data Access (a.k.a. BellSouth SPA DSO Digital Data)		28.5%	35.4%	46.2%	78.2%	100.0%	(T)
BellSouth Metro Ethernet Service		53.1%	69.9%	85.6%	94.9%	100.0%	(N)
BELLSOUTH SWA							(T)
Trunks or Lines		51.4%	58.3%	69.4%	90.3%	100.0%	
BellSouth SWA High Capacity Facilities		55.7%	66.2%	69.9%	86.2%	100.0%	(T)
BellSouth Wavelength Service		55.7%	66.2%	69.9%	86.2%	100.0%	(T)

C. When a customer cancels an order service for BellSouth Dedicated Ring, SMARTRing service (a.k.a. BellSouth Dedicated Ring) or BellSouth Wavelength service prior to the beginning of the selected service period, the customer will be liable for all capital expenses incurred by the Telephone Company in provisioning the BellSouth Dedicated Ring, SMARTRing service (a.k.a. BellSouth Dedicated Ring) or BellSouth Wavelength service, as of the date the order is canceled by the customer. The charges billed to the customer will not exceed an amount equal to the minimum period for the service as set forth in E5.2.6, E6.7.2, E7.4 and E29.1.2 of this ***Tariff*** at the month-to-month rates set forth in E6.8, E7.5 and E29.1.6 of this ***Tariff***. Such charges will be billed in addition to and subsequent to the cancellation charges set forth in B. preceding. (T)

D. If the Company misses a service date by more than thirty days due to circumstances over which it has direct control (excluding, e.g., acts of God, governmental requirements, work stoppages and civil commotions), the IC may cancel the Access Order without incurring cancellation charges.

E. When an IC cancels an order for the discontinuance of service, no charges apply for the cancellation.

All BellSouth marks contained herein and as set forth in the trademarks and servicemarks section of this Tariff are owned by BellSouth Intellectual Property Corporation.

E5. ORDERING OPTIONS FOR BellSouth SWA AND SPECIAL ACCESS (a.k.a. BellSouth SPA) SERVICE

E5.2 Access Order (Cont'd)

E5.2.4 Selection of Facilities For Access Orders

A. When an IC places an Access Order, it may choose to utilize facilities it previously purchased. If the IC has a high capacity interface or has purchased a facility, the IC must request that specific channels be used to implement the Access Order. If a facility assignment is not provided by the IC, the Company will provide the service from available inventory as discussed in E5.3 following.

B. For all other Access Orders, the option to request a specific transmission path or channel is not provided, except as provided for under Special Facilities Routing as set forth in Section E11. following.

E5.2.5 Minimum Period

A. Except as set forth in E2.4.2 ***of this Tariff*** and B., C., D. and E. following, the minimum period[1] for which Access Service is provided and for which charges are applicable is one month. (T)

Note 1: Specific regulations for BellSouth Metro Ethernet service minimum period, service rearrangements (reconfigurations) and changes are provided in E7.4.32 of this Tariff. (N)

All BellSouth marks contained herein and as set forth in the trademarks and servicemarks section of this Tariff are owned by BellSouth Intellectual Property Corporation.

E5. ORDERING OPTIONS FOR BellSouth SWA AND SPECIAL ACCESS (a.k.a. BellSouth SPA) SERVICE (T)

E5.2 Access Order (Cont'd)

E5.2.5 Minimum Period (Cont'd)

B. The minimum period for BellSouth SWA FGD and BellSouth SWA TSBSA 3 is three months. (T)

C. The minimum period for part time Program Audio Special Access (a.k.a. BellSouth SPA Program Audio) service is one day even though the service will be provided only for the duration of the event specified on the order (e.g. one-half hour, two hours, five hours, etc.). (T)

D. The minimum service period for BellSouth Wavelength service, BellSouth Dedicated Ring***, BellSouth Metro Ethernet service*** and SMARTRing service (a.k.a. BellSouth Dedicated Ring) is 4 months. (C)

E. The minimum period for BellSouth Remote Access Service is twelve months. (T)

F. Service Rearrangements[1] and Transfer of Service as set forth in E6.7.1, E7.4.1 and E29.1.4 ***of this Tariff*** for BellSouth SWA, Special Access (a.k.a. BellSouth SPA) and BellSouth Wavelength services respectively may be made without a change in minimum period requirements. (T)

G. Changes other than those identified in E6.7.1, E7.4.1[1] or E29.1.4 ***of this Tariff*** will be treated as a discontinuance of the existing service and an installation of a new service. All associated nonrecurring charges will apply for the new service. A new minimum period will be established for the new service. The IC will also remain responsible for all outstanding minimum period obligations associated with the disconnected service. (T)

The changes listed below are those which will be treated as a discontinuance and installation of service and for which a new minimum period will be established.

1. A move to a different building as set forth in E6.7.7, E7.4.5 or E29.1.4 ***of this Tariff***. (T)
2. A change in type of service (i.e., BellSouth SWA to Special Access (a.k.a. BellSouth SPA), one type of Special Access (a.k.a. BellSouth SPA) to another, or one type of BellSouth SWA service to another or one type of BellSouth SWA Basic Serving Arrangement/BellSouth SWA Basic Serving Arrangement Technical Option to another except as set forth in E6.7.6 ***of this Tariff***). (T)
3. A change in the type of Special Access (a.k.a. BellSouth SPA) service Special Access (a.k.a. BellSouth SPA) Line or Access Connection or Optical Transport Access Service Wavelength Channel. (T)
4. A change in interface for BellSouth SWA or a change in Switched Local Channel. (T)
5. Change in BellSouth SWA service traffic type. (T)
6. Change from two-point to multipoint Special Access (a.k.a. BellSouth SPA) service or from multipoint to two-point Special Access (a.k.a. BellSouth SPA) service. (T)

H. The minimum service periods for BellSouth Custom Network Service and applicable rates and charges are provided in E7.7 ***of this Tariff*** for each arrangement. Regulations and applicable charges for disconnects and moves of service prior to the expiration of the minimum period are also specified in E7.7 of this Tariff. (T)

E5.2.6 Minimum Period Charges

A. When Access Service is discontinued prior to the expiration of the minimum period, charges are applicable for the balance of the minimum period. A disconnect constitutes facilities being returned to available inventory.

The Minimum Period Monthly Charge, for monthly billed services will be determined as follows:

1. For BellSouth SWA service, usage sensitive rate elements (i.e. Carrier Common Line, Local Switching, Access Tandem Switching, BellSouth SWA Common Transport, and Interconnection) the charge for a month or fraction thereof is equal to the applicable rates for the actual or assumed usage for the month or such fraction thereof. (T)
2. For Special Access (a.k.a. BellSouth SPA) service, the charge for a month and fraction thereof is the applicable monthly rate for the service as set forth in E7.5 ***of this Tariff***. (T)
3. For BellSouth SWA Transport components which are not usage sensitive (i.e. Switched Local Channel and BellSouth SWA Dedicated Interoffice Channel and Channelization Equipment), the charge for a month or fraction thereof is the applicable monthly rate for the service as set forth in E6.8 ***of this Tariff***. (T)

B. All applicable nonrecurring charges for the service will be billed in addition to the Minimum Period Charge.

Note 1: Specific regulations for BellSouth Metro Ethernet service minimum period, service rearrangements (reconfigurations) and changes are provided in E7.4.32 of this Tariff. (N)

All BellSouth marks contained herein and as set forth in the trademarks and servicemarks section of this Tariff are owned by BellSouth Intellectual Property Corporation.

E5. ORDERING OPTIONS FOR BELLSOUTH SWA AND SPECIAL ACCESS (A.K.A. BELLSOUTH SPA) SERVICE

E5.2 Access Order (Cont'd)

E5.2.7 Shared Use Facilities

Shared Use occurs when BellSouth SWA and Special Access (a.k.a. BellSouth SPA) services are provided over the same high capacity facility through a common interface. The facility may be ordered as digital high capacity BellSouth SWA or Special Access (a.k.a. BellSouth SPA).

Billing will commence for the high capacity facility as soon as the facility is turned over to the IC for use (i.e., on the service date). Such billing will include charges for the Local Channel or Switched Local Channel, the Channelization Equipment (i.e., the multiplexer) and the interoffice transport mileage, if any. Nonrecurring installation charges will also apply at this time.

Such billing will continue until such time as the IC requests, by placing an order for service, that one or more of the derived channels be used in the provisioning of an end to end BellSouth SWA or Special Access (a.k.a. BellSouth SPA) service. When the end to end service is turned over to the IC for use, the existing billing may be modified and billing for the end to end service will commence.

When the original facility is ordered as Special Access (a.k.a. BellSouth SPA), the billing change to the existing facility, if any, will depend on whether the end to end service provisioned over the derived channel(s) is Special (a.k.a. BellSouth SPA) or BellSouth SWA. If Special Access (a.k.a. BellSouth SPA) service, the billing for the facility will not change but additional billing will commence for the end to end service provisioned over the facility. This billing will include an additional local channel(s) and interoffice mileage, if applicable, of a lower capacity level (e.g., voice grade (a.k.a. BellSouth SPA DS0 VG)).

When the original facility is ordered as Special Access (a.k.a. BellSouth SPA) and BellSouth SWA service is provisioned over a derived channel(s), the Special Access (a.k.a. BellSouth SPA) billing for the original facility will be reduced in direct proportion to the number of channels being utilized for BellSouth SWA service. For example, if six channels of DS1 are to be used for BellSouth SWA, the Special Access (a.k.a. BellSouth SPA) rate will be reduced by one fourth. The IC will be billed one fourth of the BellSouth SWA DS1 rate, plus all other applicable BellSouth SWA charges for the BellSouth SWA service provided.

When the original facility is ordered as BellSouth SWA, the billing charge to the existing facility, if any, will depend on whether the end to end service provisioned over the derived channel(s) is BellSouth SWA or Special Access (a.k.a. BellSouth SPA) service. If BellSouth SWA service, the billing for the facility will not change but additional billing will commence for the end to end service provisioned over the facility. This billing will include local switching, information surcharge, carrier common line and additional interoffice transport at a lower capacity, if applicable.

When the original facility is ordered as BellSouth SWA and Special Access (a.k.a. BellSouth SPA) service is provisioned over a derived channel(s), the BellSouth SWA billing for the original facility will be reduced in direct proportion to the number of channels being utilized for Special Access (a.k.a. BellSouth SPA) service. For example, if six channels of a DS1 are to be used for Special Access (a.k.a. BellSouth SPA), the BellSouth SWA rate will be reduced by one fourth. The IC will be billed three fourths of the BellSouth SWA DS1 rate, plus all other applicable BellSouth SWA charges. The IC will be billed one fourth of the Special Access DS1 (a.k.a. BellSouth SPA DS1) rate, plus all other applicable charges for the Special Access (a.k.a. BellSouth SPA) service provided.

BellSouth Dedicated Ring is only available for Shared Use with SMARTRing® service (a.k.a. BellSouth Dedicated Ring) and vice versa. When these services are ordered for Shared Use arrangements, all ring level components must be ordered as either BellSouth SWA or Special Access (a.k.a. BellSouth SPA) service. (N)

E5.2.8 BellSouth SWA Service to Cellular Interconnections

For BellSouth SWA FGA, BellSouth SWA FGB, BellSouth SWA FGD, BellSouth SWA TSBSA and BellSouth SWA TSBSA 3 service provided to a Mobile Telephone Switching Office (MTSO) directly interconnected to a Company access tandem office, the customer shall provide information to the Company indicating the NXX code(s) to be accessed.

® Registered Service Mark of BellSouth Corporation

E5. ORDERING OPTIONS FOR BELLSOUTH SWA AND SPECIAL ACCESS (A.K.A. BELLSOUTH SPA) SERVICE (T)

E5.3 Available Inventory

Available inventory is limited and does not include facilities previously ordered. The Company will make every reasonable effort to maintain sufficient available inventory to provide Access Service in accordance with IC's requested service date intervals. To the extent that service can be provided, Access Orders will be satisfied from available inventory.

E5.4 Shared Network Arrangement

E5.4.1 General

A. Shared Network Arrangement (SNA) is a service offering whereby multiple interexchange carriers (ICs) may share capacity on high capacity channelized services. SNA service configurations will be limited to ICs utilizing DS3 Service sharing capacity with other ICs utilizing sub-DS3 Services and/or ICs utilizing DS1 Service sharing capacity with other ICs utilizing sub-DS1 Services. Each rate element, associated with the SNA, will be billed to a single subscriber and the Company will maintain separate records (including billing and network configuration) for each ICs' portion of the SNA.

B. The DS3 and DS1 Service ICs who are sharing capacity on their services with others are considered to be the host subscribers under these arrangements. The host subscriber is considered the IC for the higher level service and is solely responsible for payment of the rate elements for such level of service, from the subscribers terminal location through channelization. Each service user of the lower level service is responsible for payment of the charges associated with lower level service. Under the SNA, the Company may share with the host subscriber record information pertaining to the services of other users of the shared network. Such disclosure will be under the sole discretion of the Company as is necessary to perform billing reconciliations and/or other functions required in connection with maintaining account records.

C. Each subscriber entering into the SNA is solely responsible to the Company for charges associated with that subscriber's portion of the shared network.

1. For example, for ***BellSouth SWA*** Dedicated Transport Shared Network Arrangements, the host IC would be responsible for a ***BellSouth SWA*** DS3 Local Channel and the ***BellSouth SWA*** DS3 to ***BellSouth SWA*** DS1 Channelization Equipment The service user will be responsible for payment of the ***BellSouth SWA*** Dedicated Interoffice Channel charges as well as any end office based ***BellSouth SWA*** charges associated with the service. (T)

D. Disconnection of the service by the host subscriber does not relieve another user of the shared network of any obligation to pay access charges associated with the portion of the shared network to which that user subscribes. Billing for services and facilities will continue until a disconnect request from the service user has been received by the Company. The host subscriber is solely responsible for notifying the connecting service user in the event of disconnection of the host's service which affects that portion of the shared network service to which the user has subscribed.

E. SNAs can be utilized on any of the following rate elements which comprise a service arrangement within a shared network:

Switched Local Channels
BellSouth SWA Channelization Elements (T)
BellSouth SWA Dedicated Interoffice Channels (T)

F. A one-time coordination charge will be assessed with the establishment of a Shared Network Arrangement. The host subscriber and the service user may, by mutual agreement, designate which party will be responsible for payment of the coordination charge. In the event no such agreement is reached, the charge will be applied to the host subscriber's account and the host subscriber will be responsible for payment of said charge.

G. Shared Network Arrangement coordination charges for ***BellSouth SWA*** services are shown in E6.8.10 following. Additionally, a separate nonrecurring charge will apply to process each service order on a shared network account. (T)

E5.5 Reserved for Future Use (T)

E5.6 Reserved for Future Use (T)

E5. ORDERING OPTIONS FOR BELLSOUTH SWA AND SPECIAL ACCESS (A.K.A. BELLSOUTH SPA) SERVICE (T)

E5. ORDERING OPTIONS FOR BELLSOUTH SWA AND SPECIAL ACCESS (A.K.A. BELLSOUTH SPA) SERVICE (T)

E5. ORDERING OPTIONS FOR BELLSOUTH SWA AND SPECIAL ACCESS (A.K.A. BELLSOUTH SPA) SERVICE (T)

E5. ORDERING OPTIONS FOR BELLSOUTH SWA AND SPECIAL ACCESS (A.K.A. BELLSOUTH SPA) SERVICE (T)

E5. ORDERING OPTIONS FOR BELLSOUTH SWA AND SPECIAL ACCESS (A.K.A. BELLSOUTH SPA) SERVICE (T)

E5. ORDERING OPTIONS FOR BELLSOUTH SWA AND SPECIAL ACCESS (A.K.A. BELLSOUTH SPA) SERVICE (T)

E5. ORDERING OPTIONS FOR BELLSOUTH SWA AND SPECIAL ACCESS SERVICE (A.K.A. BELLSOUTH SPA) (T)

E5. ORDERING OPTIONS FOR BELLSOUTH SWA AND SPECIAL ACCESS (A.K.A. BELLSOUTH SPA) SERVICE

(T)

(M)

Material previously appearing on this page now appears on page(s) 8 of this section.

E5. ORDERING OPTIONS FOR BELLSOUTH SWA AND SPECIAL ACCESS (A.K.A. BELLSOUTH SPA) SERVICE

(T)

(M)

Material previously appearing on this page now appears on page(s) 8 of this section.

E5. ORDERING OPTIONS FOR BELLSOUTH SWA AND SPECIAL ACCESS (A.K.A. BELLSOUTH SPA) SERVICE

E6. BELLSOUTH SWA SERVICE

CONTENTS

E6.1	**General**	1	
E6.1.1	BellSouth SWA FG Arrangements and Manner of Provision	1	
E6.1.2	Dedicated Access Line Service	2	
E6.1.3	Rate Categories	2	
E6.1.4	Special Facilities Routing	13	
E6.1.5	Design Layout Report	13	
E6.1.6	Acceptance Testing	14	
E6.1.7	Ordering Options and Conditions	14	
E6.1.8	BellSouth Access Collocation Cross-Connect Service	14	(N)
E6.2	**Provision and Description of BellSouth SWA Service Arrangements**	14	
E6.2.1	BellSouth SWA FGA	15	
E6.2.2	BellSouth SWA FGB	17	
E6.2.3	BellSouth SWA FGC	19	
E6.2.4	BellSouth SWA FGD	21	
E6.2.5	BellSouth SWA 8XX Toll Free Dialing Ten Digit Screening Service	23	
E6.2.6	Reserved for Future Use	23.1	
E6.2.7	BellSouth SWA 900 Service	23.2	
E6.2.8	BellSouth SWA LSBSA	24.1	
E6.2.9	BellSouth SWA TSBSA	24.4	
E6.2.10	BellSouth SWA 500 Service	24.12	
E6.2.11	BellSouth Dedicated Ring	24.14	
E6.2.12	Channels For Use With BellSouth SWA Managed Shared Network Service	25	
E6.3	**Common Switching and Transport Termination Optional Features**	25.0.1	
E6.3.1	Common Switching Optional Features (BellSouth SWA FG Customers Only)	25.0.1	
E6.3.2	Common Switching (BellSouth SWA FG and BellSouth SWA Basic Serving Arrangement Customers)	26	
E6.3.3	Basic Service Elements (BellSouth SWA Basic Serving Arrangement Customers Only)	28.2	
E6.3.4	Common Switching Optional Features for Use with Dedicated Access Lines (BellSouth SWA FG and BellSouth SWA Basic Serving Arrangement Customers)	28.6	
E6.3.5	Basic Service Elements for Use with Dedicated Access Lines (a.k.a. BellSouth SPA) (BellSouth SWA Basic Serving Arrangement Customers Only)	29	
E6.3.6	BellSouth SWA Transport Termination Optional Features	29.1	
E6.4	**Transmission Specifications**	31	
E6.4.1	Standard Transmission Specifications	31	
E6.4.2	Data Transmission Parameters	35	
E6.5	**Obligations of the Company**	37	
E6.5.1	Network Management	37	
E6.5.2	Design and Traffic Routing of BellSouth SWA Service	37.1	

All BellSouth marks contained herein and as set forth in the trademarks and servicemarks section of this Tariff are owned by BellSouth Intellectual Property Corporation.

E6. BELLSOUTH SWA SERVICE (T)

CONTENTS

E6.5 Obligations of the Company (Cont'd)

E6.5.3 Provision of Service Performance Data 38
E6.5.4 Trunk Group Measurements Reports 38
E6.5.5 Determination of Number of Transmission Paths 38
E6.5.6 Determination of Number of End Office Transport Terminations 38
E6.5.7 Design Blocking Probability 38

E6.6 Obligations of the IC 40

E6.6.1 Report Requirements 40
E6.6.2 Supervisory Signaling 41
E6.6.3 Trunk Group Measurements Report 41
E6.6.4 Design of ***BellSouth SWA*** Services 41 (T)
E6.6.5 Billing Data for Terminating Usage 41

E6.7 Rate Regulations 41

E6.7.1 Description and Application of Rates and Charges 41
E6.7.2 Minimum Periods 43
E6.7.3 Reserved for Future Use 43
E6.7.4 Minimum Monthly Charge 45
E6.7.5 Reserved for Future Use 45
E6.7.6 Change of Service Category Type 46
E6.7.7 Moves 46.1
E6.7.8 Measuring Access Minutes 47
E6.7.9 Network Blocking Charge for ***BellSouth SWA FGD*** and ***BellSouth SWA*** TSBSA 3 47.2 (T)
E6.7.10 Application of Rates for ***BellSouth SWA FGA*** and ***BellSouth SWA*** LSBSA Extension Service 47.2.1 (T)
E6.7.11 Message Unit Credit 47.3

E6. BELLSOUTH SWA SERVICE

CONTENTS

E6.7 Rate Regulations (Cont'd)

E6.7.12	Local Information Delivery Services	48	
E6.7.13	Mileage Measurement	48	
E6.7.14	Shared Use	48.1	
E6.7.15	Facility Hubs	48.1.1	
E6.7.16	(DELETED)	48.1.1	
E6.7.17	Reserved for Future Use	48.1.1	
E6.7.18	Shared Network Arrangement	48.1.1	
E6.7.19	Information Surcharge	48.1.1	
E6.7.20	Reserved for Future Use	48.2	
E6.7.21	Reserved for Future Use	48.2	
E6.7.22	BellSouth Remote Access Service	48.2	(T)
E6.7.23	Zone-Pricing - BellSouth SWA Transport	48.2	
E6.7.24	Reserved for Future Use	48.2	
E6.7.25	BellSouth Dedicated Ring	48.2	
E6.7.26	Reserved for Future Use	48.4	
E6.7.27	**(DELETED)**	48.4	(D)
E6.7.28	Channels For Use With BellSouth SWA Managed Shared Network Service	48.4	

E6.8 Rates and Charges 49

E6.8.1	BellSouth SWA Transport	49	
E6.8.2	Reserved for Future Use	50.21	
E6.8.3	Local Switching	51	
E6.8.4	BellSouth SWA 8XX Toll Free Dialing Ten Digit Screening Service	54	
E6.8.5	Reserved for Future Use	54	
E6.8.6	Information Surcharge	54	
E6.8.7	Reserved for Future Use	54	
E6.8.8	Service Rearrangements	54	
E6.8.9	Transfer of Service	55	
E6.8.10	Shared Network Arrangement	55	
E6.8.11	Reserved for Future Use	55	
E6.8.12	Reserved for Future Use	55	
E6.8.13	BellSouth SWA 500 Service	55	

All BellSouth marks contained herein and as set forth in the trademarks and servicemarks section of this Tariff are owned by BellSouth Intellectual Property Corporation.

E6. BELLSOUTH SWA SERVICE

E6.1 General

BellSouth SWA service, which is available to ICs for their use in furnishing their services to end users, provides a two-point electrical communications path between an IC's terminal location and an end user's premises. It provides for the use of common terminating, switching and trunking facilities, and common subscriber plant of the Company. BellSouth SWA service provides for the ability to originate calls from an end user's premises to an IC's terminal location, and to terminate calls from an IC's terminal location to an end user's premises in the LATA where it is provided. Specific references to material describing the elements of BellSouth SWA service are provided in E6.1.1 and E6.1.3 following.

Rates and charges for BellSouth SWA service depend generally on its use by the IC, i.e., for MTS or BellSouth SWA WATS services, MTS-WATS equivalent services, or other services (e.g., foreign exchange service), and whether it is provided in a Company end office that is equipped to provide equal access (BellSouth SWA FGD and BellSouth SWA TSBSA 3, described in E6.1.1.D. and E6.1.1.H.3. respectively). Rates and charges for BellSouth SWA service are set forth in E6.8 following. The application of rates for BellSouth SWA service is described in E6.7 following. Rates and charges for services other than BellSouth SWA service (e.g., an IC's toll message service) may also be applicable when BellSouth SWA service is used in conjunction with these other services. Descriptions of such applicability are provided in E6.2.1.A.7., E6.2.1.B.4., E6.2.2.A.5., E6.2.3.A.5., E6.2.4.A.4., E6.2.8.A.7., E6.2.8.B.6., E6.2.9.A.1.e., E6.2.9.B.1.e., E6.2.9.C.1.d., E6.7.10 and E6.7.12 following. Finally, a credit is applied against line side BellSouth SWA service charges as described in E6.7.11 following. (T)

E6.1.1 BellSouth SWA Service Arrangements and Manner of Provision

BellSouth SWA service is provided in nine service categories, four service categories of standard and optional features called BellSouth SWA FGs, BellSouth SWA 500 service, BellSouth SWA 8XX Toll Free Dialing Ten Digit Screening Service, BellSouth SWA 900 service, and two unbundled basic serving arrangements. The feature group and unbundled service categories coexist during a transition period. Any IC desiring to convert from BellSouth SWA FG service to the analogous BellSouth SWA Basic Serving Arrangement service must submit a request. A request for a change to existing service (e.g., add, delete optional features) will follow the normal ordering process for such service. The Company will provide written notification of the date which feature groups are being eliminated to all ICs of record. This notification will be sent at least six months in advance of the end of the transition period. The BellSouth SWA service categories are differentiated by their technical characteristics (e.g., line side vs. trunk side connection at the Company entry switch), and the manner in which an end user accesses them in originating calling (e.g., with or without an access code). Following is a brief description of each type of service arrangement.

A. BellSouth SWA FGA

BellSouth SWA FGA provides line side access to Company end office switches with an associated seven digit local telephone number for use in originating communications from or terminating communications to an IC's intrastate service or a Company-provided, end-office based, intrastate private network switching service. If an IC certifies that it is providing an intrastate, interLATA private network switching function for the end user at its terminal location, the end user may order BellSouth SWA FGA for off-network access. Otherwise, the IC may order such access. An end user is restricted to ordering BellSouth SWA FGA for off-network access associated with private network switches. Additionally, BellSouth SWA FGA FX/ONAL type service will be billed directly to the end user (subscriber) of these services. ICs are not restricted and in addition to the off-network access capability, ICs can order BellSouth SWA FGA in connection with providing interLATA foreign exchange service and MTS-like service. When associated with a Company-provided, end office based private network switch, end users must order BellSouth SWA FGA for off-network access. When BellSouth SWA FGA service is ordered by an end user for use with a Company provided private network switch, the end user must specify the IC that provides the interLATA links of the private network service. A more detailed description of BellSouth SWA FGA is provided in E6.2.1 following.

E6. BELLSOUTH SWA SERVICE

E6.1 General (Cont'd)

E6.1.1 BellSouth SWA FG Arrangements and Manner of Provision (Cont'd)

B. BellSouth SWA FGB

BellSouth SWA FGB, which is available to all ICs, provides trunk side access to Company end office switches with an associated uniform 950-0XXX or 950-1XXX access code for the IC's use in originating and terminating communications to an intrastate service or an IC provided intrastate communications capability. The IC must specify the IC to which the BellSouth SWA FGB service is connected or in the alternative, specify the means by which the BellSouth SWA FGB access communications is transported to a different LATA. A more detailed description of BellSouth SWA FGB is provided in E6.2.2 following.

C. BellSouth SWA FGC

BellSouth SWA FGC, which is available only to providers of MTS and WATS, provides trunk side access to Company end office switches for the IC's use in originating and terminating communications. This service is available in all end offices which are not equipped for BellSouth SWA FGD End Office Switching. Existing BellSouth SWA FGC will be converted to BellSouth SWA FGD when it becomes available in an end office. A more detailed description of BellSouth SWA FGC is provided in E6.2.3 following.

D. BellSouth SWA FGD

BellSouth SWA FGD, which is available to all ICs, provides trunk side access to Company end office switches with an associated uniform 101XXXX[1] access code for the IC's use in originating and terminating communications. As an option, BellSouth SWA FGD is also available, where technically feasible, with an associated 950-XXXX access code for the customer's use in originating and terminating traffic. A more detailed description of BellSouth SWA FGD is provided in E6.2.4 following. (C)

E. BellSouth SWA 500 Service

BellSouth SWA 500 service is an originating service that is provided via BellSouth SWA 500 service Trunk Groups. BellSouth SWA 500 service Trunk Groups will be provided in conjunction with BellSouth SWA FGC, BellSouth SWA FGD, BellSouth SWA TSBSA 2 or BellSouth SWA TSBSA 3 or in accordance with the technical characteristics of BellSouth SWA FGC, BellSouth SWA FGD, BellSouth SWA TSBSA 2 or BellSouth SWA TSBSA 3.

The service provides the IC identification function and delivery of the call to the IC based on the first six digits of the dialed number. From the Company's SSP equipped end office, the IC identification function will be performed via a database look-up at the SCP. From non-SSP equipped end offices, the IC identification function will be performed by 500 NXX screening.

A more detailed description of BellSouth SWA 500 service is set forth in E6.2.10 following.

F. BellSouth SWA 8XX Toll Free Dialing Ten Digit Screening Service

BellSouth SWA 8XX Toll Free Dialing Ten Digit Screening Service is an originating service that is provided via BellSouth SWA 8XX Toll Free Dialing Ten Digit Screening Service trunk groups. BellSouth SWA 8XX Toll Free Dialing Ten Digit Scrreening Service trunk groups, from the Company's SSP equipped end office or access tandem to the IC, will be provided in conjunction with BellSouth SWA FGD or BellSouth SWA TSBSA 3. The service provides an IC identification function and delivery of call to the IC based on the dialed ten digit number.

A more detailed description of BellSouth SWA 8XX Toll Free Dialing Ten Digit Screening Service is provided in E6.2.5 following.

G. BellSouth SWA 900 Service

BellSouth SWA 900 service is an originating service that is provided via BellSouth SWA 900 service Trunk Groups. BellSouth SWA 900 service Trunk Groups will be provided in conjunction with BellSouth SWA FGC or BellSouth SWA FGD or in accordance with the technical characteristics of BellSouth SWA FGC or BellSouth SWA FGD. The service provides the IC identification function (900 NXX screening) based on the first six digits of the dialed 900 call, which determines the IC to which the call is to be routed based on the NXX dialed.

A more detailed description of BellSouth SWA 900 service is set forth in E6.2.7 following.

Note 1: Pursuant to the FCC's Second Report and Order in CC Docket No. 92-237, the five digit access code (10XXX) for BellSouth SWA FGD will be phased-out during the period July 1, 1998 until September 1, 1998. During the conversion period as each end office is converted, five digit dialing will be routed to an announcement. Carriers and end users will have no knowledge of the conversion schedule. (M) (N)

Material previously appearing on this page now appears on page(s) 1.2 of this section.

E6. BELLSOUTH SWA SERVICE

E6.1 General (Cont'd)

E6.1.1 BellSouth SWA FG Arrangements and Manner of Provision (Cont'd)

H. BellSouth SWA LSBSA (M)

BellSouth SWA LSBSA, which is available to all ICs, provides line side access to Company end office switches with an associated seven digit local telephone number for the IC's use in originating and terminating communications to another customer's intrastate service or an IC provided intrastate communications capability. The IC must specify the Interexchange Carrier to which the BellSouth SWA LSBSA is connected or in the alternative, specify the means by which the BellSouth SWA LSBSA access communications are transported to another state. (M)

A more detailed description of BellSouth SWA LSBSA is provided in E6.2.8 following.

I. BellSouth SWA TSBSA

1. BellSouth SWA TSBSA 1

   BellSouth SWA TSBSA 1, which is available to all ICs, provides trunk side access to Company end office switches with an associated uniform 950-0XXX or 950-1XXX access code for the IC's use in originating and terminating communications to an Interexchange Carrier's intrastate service or an IC provided intrastate communications capability. The IC must specify the Interexchange Carrier to which the BellSouth SWA TSBSA 1 service is connected or, in the alternative, specify the means by which the BellSouth SWA TSBSA 1 access communications are transported to another state. A more detailed description of BellSouth SWA TSBSA 1 is provided in E6.2.9.A.

2. BellSouth SWA TSBSA 2

   BellSouth SWA TSBSA 2, which is available only to providers of MTS and WATS, provides trunk side access to Company end office switches for the IC's use in originating and terminating communications. This service is available in all end offices which are not equipped for BellSouth SWA TSBSA 3 end office switching. Existing BellSouth SWA TSBSA 2 access will be converted to BellSouth SWA TSBSA 3 when it becomes available in an end office. A more detailed description of BellSouth SWA TSBSA 2 is provided in E6.2.9.B.

3. BellSouth SWA TSBSA 3

   BellSouth SWA TSBSA 3, which is available to all ICs, provides trunk side access to Company end office switches with an associated uniform 101XXXX[1] access code for the IC's use in originating and terminating communications. This service may be presubscribed to by a primary Interexchange Carrier. A more detailed description of BellSouth SWA TSBSA 3 is provided in E6.2.9.C. (C)

   Note 1: Pursuant to the FCC's Second Report and Order in CC Docket No. 92-237, the five digit access code (10XXX) for BellSouth SWA TSBSA 3 will be phased-out during the period July 1, 1998 until September 1, 1998. During the conversion period as each end office is converted, five digit dialing will be routed to an announcement. Carriers and end users will have no knowledge of the conversion schedule. (N)

E6. BELLSOUTH SWA SERVICE

E6.1 General (Cont'd)

E6.1.1 BellSouth SWA FG Arrangements and Manner of Provision (Cont'd)

J. Manner of Provision

BellSouth SWA Service Arrangements are furnished in either quantities of lines or trunks. BellSouth SWA FGA and BellSouth SWA LSBSA are furnished on a per-line basis and BellSouth SWA FGB, BellSouth SWA FGC, BellSouth SWA FGD and BellSouth SWA TSBSA 1, BellSouth SWA TSBSA 2, and BellSouth SWA TSBSA 3 are furnished on a per-trunk basis.

Trunks are differentiated by type and directionality of traffic carried over a BellSouth SWA service arrangement.

There are four major traffic types: Originating, Terminating, CCS7 ***Access Arrangement*** and Operator Services. Originating traffic types represent access capacity within a LATA for carrying traffic from the end user to the IC and Terminating traffic types represent access within a LATA for carrying traffic from the IC to the end user; the Operator Services traffic type represents access within a LATA for carrying Operator Services traffic from the IC to the Operator Services location and the CCS7 access traffic type represents access within a LATA for carrying CCS7 Signaling traffic from the IC SPOI to a Company designated location for BellSouth SWA CCS***7 Access Service***. When ordering BellSouth SWA FGB, BellSouth SWA FGC or BellSouth SWA FGD, the IC must, at a minimum, specify such access in terms or Originating traffic type and/or Terminating traffic type. The Operator Services traffic type is used for ordering Operator Services Access Service as set forth in Section E18 ***of this Tariff***. (T)

Because some ICs will wish to further segregate their originating BellSouth SWA FGC or BellSouth SWA FGD traffic into separate trunk groups, Originating traffic type is further categorized into Domestic, 500, 800, 900 and Operator. Domestic traffic type represents access for carrying only domestic traffic other than 500, 800, 900 and Operator traffic, and 500, 800, 900 and Operator traffic type represents access for carrying, respectively, only 500, 800, 900 or Operator traffic. When ordering such types of access, the IC must specify Domestic, 500, 800, 900 or Operator traffic type.

When ordering CCS7 access, the customer must order the required number of CCS7 Signaling Connections and CCS7 Signaling Terminations. (N)

E6.1.2 Dedicated Access Line Service

Dedicated Access Line Service is provided only for use with BellSouth SWA FGC, BellSouth SWA FGD, BellSouth SWA TSBSA 2 and BellSouth SWA TSBSA 3. Dedicated Access Line Service connects an end user premises with a WATS serving office. This service is provided at rates and charges as set forth in E7. ***of this Tariff***. (T)

E6.1.3 Rate Categories

The rate categories which apply to BellSouth SWA service:

- BellSouth SWA Transport (described in E6.1.3.A. following)
- Local Switching (described in E6.1.3.B. following)
- Common Line (described in Section E3. ***of this Tariff***) (T)
- 800 Database (described in E6.1.3.D. following)
- BellSouth SWA 500 service (described in E6.1.3.C. following)

E6. BELLSOUTH SWA SERVICE (T)

E6.1 General (Cont'd)

E6.1.3 Rate Categories (Cont'd)

The following diagram depicts a generic view, with the exception of ***BellSouth SWA*** 500 service and 800 Database of the components of ***BellSouth SWA*** service and the manner in which the components are combined to provide a complete access service. The Dedicated Access Line is a component of ***BellSouth SPA*** service that utilizes ***BellSouth SWA*** service. (T)

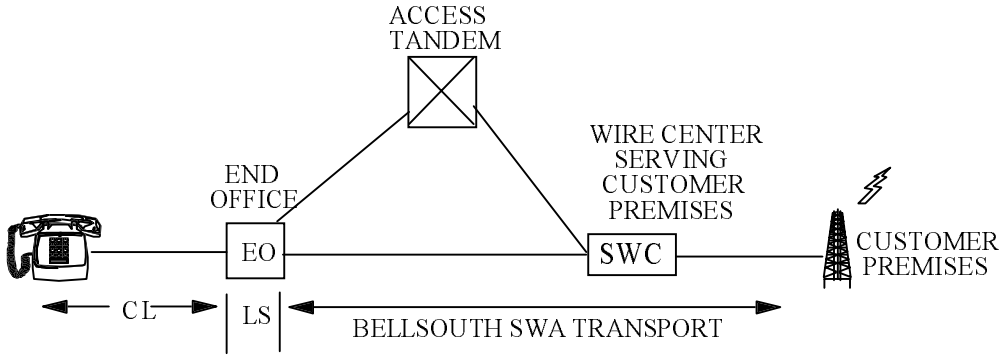

(T)

LOCAL SWITCHING - LS
COMMON LINE - CL
BELLSOUTH SWA TRANSPORT (T)

A. ***BellSouth SWA*** Transport (T)

The ***BellSouth SWA*** Transport rate category provides the transmission facilities and equipment between: (T)

- the IC's premises and the IC's serving wire center;
- the IC's serving wire center and the end office switch(es);
- the end office switch(es) and the access tandem and;
- the IC's serving wire center and the access tandem.

The IC's traffic is switched at the end office to originate or terminate the IC's communications.

BellSouth SWA Transport is a two-way voice frequency transmission path composed of facilities determined by the Company or as ordered by the IC. The voice frequency transmission path permits the transport of calls in the originating direction (from the end user end office switch to the IC's terminal location) and in the terminating direction (from the IC's terminal location to the end office switch), but not simultaneously. The voice frequency transmission path may be comprised of any form or configuration of plant capable of and typically used in the telecommunications industry for the transmission of voice and associated telephone signals within the frequency bandwidth of approximately 300 to 3000 Hz. (T)

For purposes of determining the type of ***BellSouth SWA*** Transport to be used, the IC must designate if the service is to be directly routed to the end office switch or routed through the Access Tandem. (T)

E6. BELLSOUTH SWA SERVICE

E6.1 General (Cont'd)

E6.1.3 Rate Categories (Cont'd)

A. BellSouth SWA Transport (Cont'd)

The Company will work cooperatively with the IC in determining: (1) whether the service is to be directly routed to an end office, (2) whether the service is to be routed through an access tandem, (3) whether the service is routed through a TOPS Tandem and (4) the directionality of the service.

In addition, when the IC has ordered BellSouth SWA FGD or BellSouth SWA TSBSA 3 in association with the AccuPulse® service Access Capability feature as set forth in 7. following, the Company will assure that facilities it provides are capable of supporting 56 Kbps digital data.

When the IC has ordered BellSouth SWA FGD or BellSouth SWA TSBSA 3 with the BellSouth SWA CCSAC optional feature, as set forth in 8. following, the Company will provide the BellSouth SWA CCSAC option in accordance with the technical specifications set forth in the BellSouth Guidelines to Technical Publication TR-TSV-000905.

When the IC has ordered BellSouth SWA FGD or BellSouth SWA TSBSA 3 with the 64 CCC optional feature, as set forth in 8. following, the Company will provide the 64 Clear Channel capability (CCC) option in accordance with the Technical Publication TR-TSV-000962.

When the IC has ordered BellSouth SWA LSBSA service and any of the following BSEs, BCLID, SMDI, Make Busy/Night Transfer, Queuing (subelement including Call Waiting and Music After Delay Announcement Only), a Dedicated Network Access Line (DNAL) is required between the IC's premises and the Company's end office switch. The DNAL provides for the transport of data and control information through voice grade or program audio facilities. DNALs are further described in ***6.*** following. DNALs are provided in accordance with technical references and publications TR-NPL-000335, PUB 41004 - Table 4, and TR-NPL-000337, and as specified following. (T)

BellSouth SWA Transport is provided at the rates and charges set forth in E6.8.1 following. The application of these rates with respect to individual BellSouth SWA FGs and BellSouth SWA Basic Serving Arrangements is set forth in E6.7.1 following.

The basic components applicable to BellSouth SWA Transport are Switched Local Channel, Switched Interoffice Channel (for dedicated and common transport), Channelization Equipment, Access Tandem Switching***, Dedicated Tandem Trunk Port Service*** and Interconnection. These are defined following: (C)

1. Switched Local Channel

   The Switched Local Channel provides a communications path between the IC's premises and the serving wire center of that premises. Included as part of the Switched Local Channel is a standard channel interface arrangement which defines the technical characteristics associated with the type of facilities to which the access service is to be connected at the IC's point of termination. The Switched Local Channel is capable of carrying a combination of BellSouth SWA traffic types (e.g., BellSouth SWA FGs, BellSouth SWA 8XX Toll Free Dialing Ten Digit Screening Service and BellSouth SWA 900 service, etc.)

   The Switched Local Channel rate is assessed a monthly fixed charge based on the capacity (e.g. Voice Grade, DS1, DS3) ordered. This charge will also apply when the IC premises and the serving wire center are located in the same Company building. A Switched Local Channel will be applicable when associated with services ordered by End Users which are utilizing a Company-provided, end office based private Network Switching System.

   Additionally, the Switched Local Channel can provide a transmission path between an interstate Switched Expanded Interconnection Arrangement and a Telephone Company end office switch (Intraoffice DS1 or DS3) when a Switched Expanded Interconnection Arrangement is purchased from BellSouth Telecommunications, Inc., Tariff F.C.C. No. 1. This Switched Local Channel is provided at DS1 and/or DS3 capacity and is assessed a monthly fixed charge based on the capacity ordered by the Interconnecting IC.

® Registered Service Mark of BellSouth Intellectual Property Corporation

E6. BELLSOUTH SWA SERVICE

E6.1 General (Cont'd)

E6.1.3 Rate Categories (Cont'd)

A. BellSouth SWA Transport (Cont'd)

2. Switched Interoffice Channel

The Switched Interoffice Channel provides a transmission facility and the Facility Termination. The Facility Termination applies for each Switched Interoffice Channel terminated.

Depending upon the IC's order for BellSouth SWA services, the Switched Interoffice Channel can be used for BellSouth SWA Dedicated Transport or BellSouth SWA Common Transport.

For BellSouth SWA Dedicated Transport, the Switched Interoffice Channel can be provisioned between the following IC designated points: (1) the IC's serving wire center (SWC) and the Company end office switch(es), (2) the SWC and a Company Facility Hub (Hub) and, (3) the SWC and an Access Tandem, (4) a Hub and an Access Tandem, (5) a Hub to an end office and, (6) a Hub to a Hub.

For BellSouth SWA Common Transport, the Switched Interoffice Channel can be provisioned between the IC's SWC and the IC designated Company end office switch(es) ***and*** the Access Tandem. ***This includes*** transport between the Access Tandem and the end office, between an end office which serves as a host for a remote switching system or module (RSS or RSM) and the RSS or RSM and for terminating BellSouth SWA FGA between the dial tone office and the end office, the transport must be BellSouth SWA Common Transport. (C)

Mileage measurement, for BellSouth SWA Common Transport and BellSouth SWA Dedicated Transport, is in accordance with E6.7.13, following.

(DELETED) (D)

a. Switched Dedicated Interoffice Channel

The Switched Dedicated Interoffice Channel (SW DIOC) rate category consists of two rate elements: (1) a Switched Dedicated Transport Interoffice Channel Facility, and (2) a Switched Dedicated Transport Interoffice Channel Facility Termination.

The SW DIOC Facility is ordered by the IC based on capacity (e.g., Voice Grade, DSO, DS1 or DS3) and permits the transmission of calls or data in the originating direction and/or in the terminating direction depending upon the IC's facility configuration.

The Facility Termination component of the SW DIOC provides equipment necessary for the termination of the Switched Dedicated Interoffice Channel facility. A Facility Termination charge will apply for each service termination of greater than zero miles (i.e., Voice Grade, DSO, DS1 or DS3).

The SW DIOC transmission charge is a monthly, per mile charge based on the capacity of the service (e.g., Voice Grade, DSO, DS1 and/or DS3). The Facility Termination charge is assessed as a monthly rate.

b. Switched Common Interoffice Channel

The Switched Common Interoffice Channel (SW CIOC) is composed of Switched Common Transport facilities as determined by the Company and permits the transmission of calls or data in the originating direction and/or terminating direction depending upon the IC's order.

E6. BELLSOUTH SWA SERVICE

E6.1 General (Cont'd)

E6.1.3 Rate Categories (Cont'd)

A. BellSouth SWA Transport (Cont'd)

2. Switched Interoffice Channel (Cont'd)

b. Switched Common Interoffice Channel (Cont'd)

The Facility Termination component of the SW CIOC provides for equipment necessary for the termination of the Switched Common Interoffice Channel facility.

The SW CIOC transmission charge is a per minute of use, per mile charge. Facility Termination charges are assessed on a per minute of use of greater than zero miles.

3. Access Tandem Switching

Access Tandem Switching provides for the function of switching traffic from or to the Access Tandem from or to the end office switch(es). The Access Tandem Switching charge is assessed on all originating and terminating minutes of use switched at the Access Tandem.

4. Dedicated Tandem Trunk Port (N)

The Dedicated Tandem Trunk Port provides for termination of transport facilities at the Company tandem switch. This service is required for all BellSouth SWA Dedicated Transport ordered to the access tandem for switching at the tandem. It is available on a DS0/VG and DS1 trunk port basis. Rates and charges are set forth in E6.8.1 following. (N)

5. Interconnection (T)

The Interconnection charge shall be assessed upon all ICs interconnecting with the BellSouth SWA network. Interconnection is applicable to all switched access originating and terminating minutes of use. ***Separate originating and terminating Interconnection charges are applicable for those ICs utilizing Company transport facilities and those ICs not using Company transport facilities to gain access to the Company switched network.*** (C)

The application of originating and terminating Interconnection rates on the originating and for BellSouth FGA, BellSouth SWA LSBSA, 700, BellSouth SWA 8XX Toll Free Dialing Ten Digit Screening service and BellSouth SWA 900 service will follow the application of originating and terminating Carrier Common Line rates for those services as specified in E3.9.E of this Tariff. Interconnection rates are provided in E6.8.1 following. (N)

E6. BELLSOUTH SWA SERVICE

E6.1 General (Cont'd)

E6.1.3 Rate Categories (Cont'd)

A. BellSouth SWA Transport (Cont'd)

6. Interface Group Arrangements (T)

Interface Group Arrangements, Interface Groups and Dedicated Network Access Line (DNAL) are provided for terminating the BellSouth SWA Transport at the IC's terminal location. Each Interface Group and DNAL provides a specified premises interface (e.g., two-wire, DS1, etc.). Where transmission facilities permit, the individual transmission path may be provided, at the option of the IC, with optional features.

As a result of the IC's access order, the need for signaling conversions or two-wire to four-wire conversions, or the need to terminate digital or high frequency facilities, channelization equipment may be required at the IC's terminal location. For example, if a voice frequency interface is ordered by the IC and the Company facilities serving the IC's terminal location are digital, channelization equipment must be provided by the IC in order to provide the voice frequency interface ordered by the IC.

Interface Group 1 is provided with Type C Transmission Specifications and Interface Groups 2, 6 and 9 are provided with Type A or B Transmission Specifications, depending on the Feature Group and whether the access service is routed directly or through an access tandem. All Interface Groups are provided with Data Transmission Parameters and the type signaling option ordered.

Only certain premises interfaces are available at the IC terminal locations. The premises interfaces associated with the Interface Group Arrangements may vary among different types of service. The various premises interfaces which are available with the Interface Group Arrangements, and the type of service with which they may be used, are set forth in E6.1.3 following.

a. Interface Group 1 (USOC TPP1X)

Interface Group 1 provides two-wire voice frequency transmission at the point of interface at the IC terminal location. Interface Group 1 is capable of transmission of voice and associated telephone signals within the frequency bandwidth of approximately 300 to 3000 Hz.

Interface Group 1 is not provided in association with BellSouth SWA FGC, BellSouth SWA FGD, BellSouth SWA 500 service, BellSouth SWA 8XX Toll Free Dialing Ten Digit Screening Service and BellSouth SWA 900 service and BellSouth SWA TSBSA 2 and BellSouth SWA TSBSA 3 when the first point of switching is an access tandem. In addition, Interface Group 1 is not provided in association with BellSouth SWA FGB, BellSouth SWA FGC, BellSouth SWA FGD or BellSouth SWA TSBSA when the first point of switching provides only four-wire terminations.

The transport between the point of interface at the IC terminal location and the IC's serving wire center may be comprised of any form or configuration of plant capable of and typically used in the telecommunications industry for the transmission of voice and associated telephone signals within the frequency bandwidth of 300 to 3000 Hz.

E6. BELLSOUTH SWA SERVICE

E6.1 General (Cont'd)

E6.1.3 Rate Categories (Cont'd)

A. BellSouth SWA Transport (Cont'd)

6. Interface Group Arrangements (Cont'd) (T)

a. Interface Group 1 (USOC TPP1X) (Cont'd)

The interface is provided with loop supervisory signaling. When the interface is associated with BellSouth SWA FGA or BellSouth SWA LSBSA, such signaling will be loop start or ground start signaling. When the interface is associated with BellSouth SWA FGB, BellSouth SWA FGC, BellSouth SWA FGD, BellSouth SWA 500 service, BellSouth SWA 8XX Toll Free Dialing Ten Digit Screening Service and BellSouth SWA 900 service or BellSouth SWA TSBSA, such signaling, except for two-way calling which is E&M signaling, will be reverse battery signaling.

b. Interface Group 2 (USOC TPP2X)

Interface Group 2 provides four-wire voice frequency transmission at the point of interface at the IC terminal location. Interface Group 2 is capable of transmission of voice and associated telephone signals within the frequency bandwidth of approximately 300 to 3000 Hz.

E6. BELLSOUTH SWA SERVICE

E6.1 General (Cont'd)

E6.1.3 Rate Categories (Cont'd)

A. BellSouth SWA Transport (Cont'd)

6. Interface Group Arrangements (Cont'd) (T)

b. Interface Group 2 (USOC TPP2X) (Cont'd)

The transport between the point of interface at the IC terminal location and the IC's serving wire center may be comprised of any form or configuration of plant capable of and typically used in the telecommunications industry for the transmission of voice and associated telephone signals within the frequency bandwidth of approximately 300 to 3000 Hz.

E6. BELLSOUTH SWA SERVICE

E6.1 General (Cont'd)

E6.1.3 Rate Categories (Cont'd)

A. BellSouth SWA Transport (Cont'd)

6. Interface Group Arrangements (Cont'd) (T)

b. Interface Group 2 (USOC TPP2X) (Cont'd)

The interface is provided with loop supervisory signaling. When the interface is associated with BellSouth SWA FGA or BellSouth SWA LSBSA such signaling will be loop start or ground start signaling. When the interface is associated with BellSouth SWA FGB, BellSouth SWA FGC, BellSouth SWA FGD, BellSouth SWA 8XX Toll Free Dialing Ten Digit Screening Service or BellSouth SWA 900 service or BellSouth SWA TSBSA, such signaling, except for two-way calling which is E&M signaling, will be reverse battery signaling.

c. Interface Group 6 (USOC TPP6X)

Interface Group 6 provides DS1 level digital transmission at the point of interface at the IC terminal location. The interface is capable of transmitting electrical signals at a nominal 1.544 Mbps, with the capability to channelize up to twenty-four voice frequency transmission paths. Before the first point of switching, channelization equipment may be necessary to derive twenty-four transmission paths of a frequency bandwidth of approximately 300 to 3000 Hz. When digital switching or analog switching with digital carrier terminations is provided, the Company will provide, at the first point of switching, a DS1 signal in D4 format.

The interface is provided with individual transmission path bit stream supervisory signaling.

E6. BELLSOUTH SWA SERVICE

E6.1 General (Cont'd)

E6.1.3 Rate Categories (Cont'd)

A. BellSouth SWA Transport (Cont'd)

6. Interface Group Arrangements (Cont'd) (T)

d. Interface Group 9 (USOC TPP9X)

Interface Group 9 provides DS3 level digital transmission at the point of interface at the IC terminal location. The interface is capable of transmitting electrical signals at a nominal 44.736 Mbps, with the capability to channelize up to 672 voice frequency transmission paths. Before the first point of switching, channelization equipment will be necessary to derive up to 672 transmission paths of a frequency bandwidth of approximately 300 to 3000 Hz. When digital switching, or analog switching with digital carrier terminations is provided, the Company will provide, at the first point of switching, at the IC's request, DS1 signals in D4 format.

The interface is provided with individual transmission path bit stream supervisory signaling.

E6. BELLSOUTH SWA SERVICE

E6.1 General (Cont'd)

E6.1.3 Rate Categories (Cont'd)

A. BellSouth SWA Transport (Cont'd)

6. Interface Group Arrangements (Cont'd) (T)

e. Dedicated Network Access Line (DNAL)

The DNAL provides a connection between the IC designated premises and a Company central office (which provides BellSouth SWA LSBSA dial tone) for connection to equipment that is not a part of the central office switch but which is used to provide the associated BSE. The DNAL is used only in conjunction with BellSouth SWA LSBSA BSE services requiring a separate link for transmitting data or control information as specified in E6.3.3. The BellSouth SWA LSBSA BSE service determines the requirement for speed, type, and number of DNALs.

DNAL Service is either a two-wire or four-wire channel providing either voice frequency transmission capability in the nominal frequency range of 200 to 3500 Hz, or program audio transmission capability in the nominal frequency range of 50 to 8000 Hz.

There are two basic rate categories which apply to DNALs. Each DNAL has one Switched Local Channel and one Switched Interoffice Channel as described following:

(1) DNAL Switched Local Channel

In general, the DNAL Switched Local Channel rate category provides for the communications path between the IC designated premises and the serving wire center of that premises. One DNAL Switched Local Channel charge will apply per IC designated premises at which the channel is terminated. This charge will also apply where the IC designated premises and the serving wire center are located in the same Company building.

(2) DNAL Switched Interoffice Channel

The DNAL Switched Interoffice Channel rate category provides for the transmission facilities between the serving wire center of the IC designated premises and the serving wire center providing the associated LSBSA dial tone. A DNAL Switched Interoffice Channel is ***portrayed*** in mileage bands. There are two rates that apply for each band (i.e., a flat rate per band and a rate per mile). (T)

7. Available Premises Interface Codes (T)

Following is a matrix showing, for each Interface Group, which premises interface codes are available as a function of the Company switch supervisory signaling and the Switched Access service arrangement. For BellSouth SWA 500, BellSouth SWA 8XX Toll Free Dialing Ten Digit Screening Service and BellSouth SWA 900 service, the premises interface codes are the same as those set forth for BellSouth SWA FGC and BellSouth SWA FGD. Additionally, premises interface codes for the unbundled access services (BellSouth SWA LSBSA and BellSouth SWA TSBSA) match that of the BellSouth SWA FGs as listed following.

E6. BELLSOUTH SWA SERVICE

E6.1 General (Cont'd)

E6.1.3 Rate Categories (Cont'd)

A. BellSouth SWA Transport (Cont'd)

7. Available Premises Interface Codes (Cont'd) (T)

BellSouth SWA FG	BellSouth SWA Basic Serving Arrangements
FGA	BellSouth SWA LSBSA
FGB	BellSouth SWA TSBSA 1
FGC	BellSouth SWA TSBSA 2
FGD	BellSouth SWA TSBSA 3

E6. BELLSOUTH SWA SERVICE

E6.1 General (Cont'd)

E6.1.3 Rate Categories (Cont'd)

A. BellSouth SWA Transport (Cont'd)

7. Available Premises Interface Codes (Cont'd) (T)

For explanation of the codes, see Glossary of Channel Interface Codes in ***8***. following (T)

a. Interface Group 1

Company Switch Supervisory Signaling	Premises Interface Code	BellSouth SWA FG FGA	FGB	FGC	FGD
LO	2LS2	X			
LO	2LS3	X			
GO	2GS2	X			
GO	2GS3	X			
LO, GO	2DX3	X			
LO, GO	4EA3-E	X			
LO, GO	4EA3-M	X			
LO, GO	6EB3-E	X			
LO, GO	6EB3-M	X			
RV, EA, EB, EC	2DX3		X	X	X
RV, EA, EB, EC	4EA3-E		X	X	X
RV, EA, EB, EC	4EA3-M		X	X	X
RV, EA, EB, EC	6EB3-E		X	X	X
RV, EA, EB, EC	6EB3-M		X	X	X
EA, EB, EC	6EC3			X	X
RV	2RV3-O		X	X	X
RV	2RV3-T		X	X	X
CCS	2NO2				X

b. Interface Group 2

LO, GO	4SF2	X			
LO, GO	4SF3	X			
LO	4LS2	X			
LO	4LS3	X			
LO	6LS2	X			
GO	4GS2	X			
GO	4GS3	X			
GO	6GS2	X			
LO, GO	4DX2	X			
LO, GO	4DX3	X			
LO, GO	6EA2-E	X			
LO, GO	6EA2-M	X			

E6. BELLSOUTH SWA SERVICE

E6.1 General (Cont'd)

E6.1.3 Rate Categories (Cont'd)

A. BellSouth SWA Transport (Cont'd)

7. Available Premises Interface Codes (Cont'd) (T)

b. Interface Group 2 (Cont'd)

Company Switch Supervisory Signaling	**Premises Interface Code**	**BellSouth SWA FG FGA**	**FGB**	**FGC**	**FGD**
LO, GO	8EB2-E	X			
LO, GO	8EB2-M	X			
LO, GO	6EX2-B	X			
RV, EA, EB, EC	4SF2		X	X	X
RV, EA, EB, EC	4SF3		X		
RV, EA, EB, EC	4DX2		X	X	X
RV, EA, EB, EC	4DX3		X		
RV, EA, EB, EC	6DX2			X	
RV, EA, EB, EC	6EA2-E		X	X	X
RV, EA, EB, EC	6EA2-M		X	X	X
RV, EA, EB, EC	8EB2-E		X	X	X
RV, EA, EB, EC	8EB2-M		X	X	X
EA, EB, EC	8EC2-M			X	X
RV	4RV2-O		X	X	X
RV	4RV2-T		X	X	X
RV	4RV3-O		X	X	
RV	4RV3-T		X	X	
CCS	4NO2				X

E6. BELLSOUTH SWA SERVICE

E6.1 General (Cont'd)

E6.1.3 Rate Categories (Cont'd)

A. BellSouth SWA Transport (Cont'd)

7. Available Premises Interface Codes (Cont'd) (T)

c. Interface Group 6

Company Switch Supervisory Signaling	Premises Interface Code	BellSouth SWA FG FGA	FGB	FGC	FGD
LO, GO	4DS9-15	X			
LO, GO	4DS9-15L	X			
RV, EA, EB, EC	4DS9-15		X	X	X
RV, EA, EB, EC	4DS9-15L		X	X	X
CCS	4DS9-15				X
CCSAC+	4DS9-15				X

d. Interface Group 9

LO, GO	4DS6-44	X			
LO, GO	4DS6-44L	X			
RV, EA, EB, EC	4DS6-44		X	X	X
RV, EA, EB, EC	4DS6-44L		X	X	X
CCS	4DS6-44				X

E6. BELLSOUTH SWA SERVICE

E6.1 General (Cont'd)

E6.1.3 Rate Categories (Cont'd)

A. BellSouth SWA Transport (Cont'd)

7. Available Premises Interface Codes (Cont'd)

e. AccuPulse® service Access Capability transmission is provided only with BellSouth SWA FGD and BellSouth SWA TSBSA 3 using Interface Groups 6 and 9. Following is a matrix showing for Interface Groups 6 and/or 9, which premises interface codes are available as a function of the AccuPulse® service level of digital transmission.

Interface Groups	Level of Transmission	Premises Interface Code
6	DS1	04DS9-15
9	DS3	04DS6-44

f. CCS7 Signaling Connection Premises Interface Codes (N)

The CCS***7*** optional feature ***is available*** with BellSouth SWA FGD and BellSouth SWA TSBSA 3. BellSouth SWA FGD and BellSouth SWA TSBSA 3 trunks are provided using Interface Groups 1, 2, 6 or 9. ***CCS7*** Signaling connections are provided using Interface Groups 6 or 9. Following is a matrix for Interface Groups 6 and 9 showing which premises interface codes are available for ***CCS7 S***ignaling ***C***onnections as a function of the BellSouth SWA CCSAC level of digital transmission. (C)

Interface Groups	Level of Transmission	Premises Interface Code
6	DS1	04DS9-15
9	DS3	04DS6-44

g. Dedicated Network Access Line Premises Interface Codes

The DNAL is provided only with the BellSouth SWA LSBSA BSEs - SMDI, BCLID, Make Busy/Night Transfer, and Queuing (subelements including Call Waiting and Music After Delay Announcement Only). The appropriate Company and premises interface codes are as follows:

® Registered Service Mark of BellSouth Intellectual Property Corporation

E6. BELLSOUTH SWA SERVICE

E6.1 General (Cont'd)

E6.1.3 Rate Categories (Cont'd)

A. BellSouth SWA Transport (Cont'd)

7. Available Premises Interface Codes (Cont'd) (T)

g. Dedicated Network Access Line Premises Interface Codes (Cont'd) (T)

Interface Group Arrangement	Associated BSE	Frequency Band	Company Interface Code	Premises Interface Code
DNAL	SMDI, BCLID	-	04DM-3	04DA2, 04DB2, 04DS9-15, 04DS9-31
	Make Busy/ Night Transfer	-	02DC8-4	02CC8-4, 04DS9-15-LS[1,2]
	Queuing-Call Waiting	-	02CC8	02DC8-4, 04DS9-15-L0[2,3]
	Queuing-Music After Delay Announcement	200-3500Hz	02PG-3	02PG1-3, 02PG2-3, 4DS9-15E
		100-5000Hz	02PG-5	02PG1-5, 02PG2-5, 4DS9-15F
		50-8000Hz	02PG-8	02PG1-8, 02PG2-8, 4DS9-15G

8. Premises Interface Codes (T)

a. This paragraph explains the premises interface codes set forth in ***7***. preceding that the IC can specify when ordering Switched Access Service. Included is an example which explains the specific characters of the code, a glossary of premises interface codes and impedance levels. (T)

Note 1: This service requires the end user to provide a contact closure. In the normal or open state the end user will provide a resistance greater than 30,000 ohms between the tip and ring leads. In the closed state the end user will provide 600 ohms or less across tip and ring.
The Company will provide a negative voltage on the tip lead and ground on the ring lead. The voltage will be in the range of 42.5 to 52.5 VDC. The loop current will be 16 to 50 mA.

Note 2: When the DS interface is required, only the loop closure function is used. Voice frequency service specifications are not supported on any channel using CC or DC interfaces. Additional information may be found in TR-TSY-000335.

Note 3: With the DC interface the end user provides a voltage source. A negative voltage will be provided on the tip with ground provided on the ring. The open circuit tip-to-ring voltage shall not be more negative than 52.5 VDC. The voltage source shall be able to provide at least 16 mA to an external resistance of 2000 ohms.

E6. BELLSOUTH SWA SERVICE

E6.1 General (Cont'd)

E6.1.3 Rate Categories (Cont'd)

A. BellSouth SWA Transport (Cont'd)

8. Premises Interface Codes (Cont'd) (T)

a. (Cont'd)

Example: If the IC specifies a 4EA3-E premises interface at the IC terminal location, it is requesting the following:

4 .....Number of Physical wires at IC terminal location

EA.....Premises interface code for Type I, E&M lead signaling

3 .....Impedance

E .....IC at point of interface or end user at network interface

b. Glossary of Premises Interface Codes and Options

AH	Analog high capacity interface
- B	60 KHz to 180 KHz (12 channels)
- C	312 KHz to 552 KHz (60 channels)
- D	564 KHz to 3084 KHz (600 channels)
DS	Digital hierarchy interface
- 15	1.544 Mbps (DS1) format per POB 41451 plus 04
- 15L	1.544 Mbps (DS1) with SF signaling

E6. BELLSOUTH SWA SERVICE

E6.1 General (Cont'd)

E6.1.3 Rate Categories (Cont'd)

A. BellSouth SWA Transport (Cont'd)

8. Premises Interface Codes (Cont'd) (T)

b. Glossary of Premises Interface Codes and Options (Cont'd)

- 44	44.736 Mbps (DS3)
- 44L	44.736 Mbps (DS3) with SF signaling
DX	Duplex signaling interface at IC point of interface
DX	Type I, E&M lead signaling.
- E	IC at point of interface or end user at network interface originates on E lead.
- M	IC at point of interface or end user at network interface originates on M Lead.
EB	Type II, E&M lead signaling.
- E	IC at point of interface or end user at network interface originates on E Lead.
- M	IC at point of interface or end user at network interface originates on M lead.
EC	Type III, E&M signaling at IC terminal point of interface.
EX	Tandem channel unit signaling for loop start or ground start
- A	IC supplies open end (dial pulsing, etc.) functions.
- B	IC supplies closed end (dial pulsing, etc.) functions.
GS	Ground start loop signaling - closed end functions by IC or end user
LS	Loop start loop signaling - closed end functions by IC or end user
RV	Reverse battery signaling
- O	One way operation, originate by IC.
- T	One way operation, terminate function by IC or end user.
SF	Single frequency signaling within VF band at either IC point of interface or end user network interface

E6. BELLSOUTH SWA SERVICE

E6.1 General (Cont'd)

E6.1.3 Rate Categories (Cont'd)

A. BellSouth SWA Transport (Cont'd)

8. Premises Interface Codes (Cont'd) (T)

c. Impedance

The nominal reference impedance with which the channel will be terminated for the purposes of evaluating transmission performance.

Value (ohms)	Code(s)
110	0
600	2
900	3
135	5
75	6
100	9

d. Digital Hierarchy Premises Interface Codes

These premises interfaces are available only to ICs that select the multiplexed four-wire DSX-1 or higher premises interface option at the IC terminal location and provide subsequent system and channel assignment data.

The various digital bit rates in the digital hierarchy employ the premises interface codes 4DS9, 4DS0 or 4DS6 plus the speed options indicated following.

Interface Code and Speed Option	Nominal Bit Rate (Mbps)	Digital Hierarchy Level
4DS9-15	1.544	DS1
4DS9-15L	1.544	DS1
4DS6-44	44.736	DS3
4DS6-44L	44.736	DS3

E6. BELLSOUTH SWA SERVICE

E6.1 General (Cont'd)

E6.1.3 Rate Categories (Cont'd)

A. BellSouth SWA Transport (Cont'd)

9. Optional Features (T)

Where transmission facilities permit, the Company will, at the option of the IC, provide the following optional features in association with BellSouth SWA Transport. The optional features are provided as set forth in E6.8.1 following.

a. Supervisory Signaling

Where the transmission parameters permit, and where signaling conversion is required by the IC to meet its signaling capability, the IC may order an optional supervisory signaling arrangement for each transmission path provided as follows:

- For Interface Groups 1 and 2

  DX Supervisory Signaling,
  E&M Type I Supervisory Signaling,
  E&M Type II Supervisory Signaling, or
  E&M Type III Supervisory Signaling

- For Interface Group 2

  SF Supervisory Signaling or
  Tandem Supervisory Signaling

- For Interface Groups 6 and 9

  These Interface Groups may, at the option of the IC, be provided with individual transmission path SF supervisory signaling where such signaling is available in Company central offices. Generally such signaling is available only where the entry switch provides an analog, i.e., non digital, interface to the BellSouth SWA Transport Termination and a portion of the facility between the analog entry switch and the IC's terminal location is analog.

These optional supervisory signaling arrangements are not available in combination with the BellSouth SWA CCSAC option, as specified in f. following.

b. IC Specified Entry Switch Receive Level

This feature allows the IC to specify the receive transmission level at the first point of switching. The range of transmission levels which may be specified is described in Technical Reference PUB 62500. This feature is available with Interface Groups 2, 6 and 9 for BellSouth SWA FGA, BellSouth SWA FGB, BellSouth SWA LSBSA and BellSouth SWA TSBSA 1.

c. IC Specification of BellSouth SWA Transport Termination

This option allows the IC to specify, for BellSouth SWA FGB or BellSouth SWA TSBSA 1 routed directly to an end office or access tandem, a four-wire termination of the BellSouth SWA Transport at the entry switch in lieu of a Company selected two-wire termination. This option is available only when the BellSouth SWA FGB or BellSouth SWA TSBSA 1 arrangement is provided with Type B Transmission Specifications.

d. AccuPulse® service Access Capability

This option allows an IC to establish a connection between the IC's premises and a suitably equipped end user premises over facilities that are capable of transmitting 56 Kbps digital data. This option requires the use of Interface Groups 6 or 9. It is provided to suitably equipped electronic end offices or access tandems and is available only with BellSouth SWA FGD or BellSouth SWA TSBSA 3.

® Registered Service Mark of BellSouth Intellectual Property Corporation

E6. BELLSOUTH SWA SERVICE

E6.1 General (Cont'd)

E6.1.3 Rate Categories (Cont'd)

A. BellSouth SWA Transport (Cont'd)

9. Optional Features (Cont'd)

e. Coin Sent-Paid Capability

Coin sent-paid capability allows the IC to receive signals for coin sent-paid traffic from line controlled pay stations. This option requires the use of Exchange Access Operator Services Signaling (EAOSS) and/or Modified Operator Services Signaling (MOSS). Coin sent-paid capability access is provided in designated Company end offices or via tandem access at the TOPS tandem switches and is available with BellSouth SWA FGD and BellSouth SWA TSBSA 3.

Technical specifications for MOSS are as set forth in the Bell Communications Research Technical Publication TR-TSY-000064. Technical specifications for EAOSS are as set forth in the Bell Communications Research Technical Publication TR-TSY-0000271.

f. BellSouth SWA CCSAC

This option allows the IC to receive signals for call set-up out of band. This option is available with BellSouth SWA FGD and BellSouth SWA TSBSA 3. (C)

This option requires the establishment of ***CCS7 S***ignaling ***Connections and CCS7 Signaling Terminations*** between the ***customer's*** signaling point of interface and the Company's ***designated*** Signal Transfer Point (STP). ***A minimum of one pair or one quad of CCS7 Signaling Connections and Terminations is required as further described in E6.1.3.C. following.*** (C)

(C)

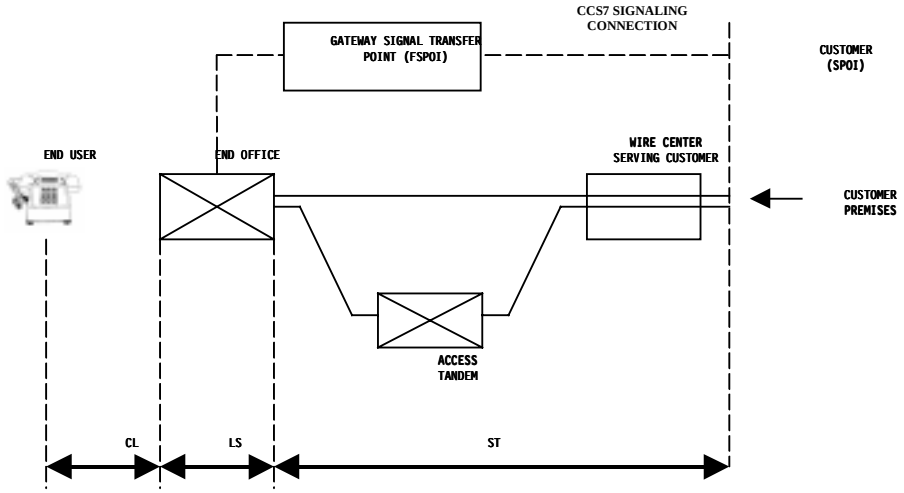

ST - BELLSOUTH SWA TRANSPORT

LS - LOCAL SWITCHING

CL - COMMON LINE

E6. BELLSOUTH SWA SERVICE

E6.1 General (Cont'd)

E6.1.3 Rate Categories (Cont'd)

A. BellSouth SWA Transport (Cont'd)

9. Optional Features (Cont'd)

g. 64 Clear Channel Capability (CCC)

(1) Clear Channel Capability (CCC) is an arrangement that alters a DS1/1.544 Mbps signal with unconstrained information bits to meet pulse density requirements outlined in TR-NPL-000054 and TA-TSY-000342. This will allow an IC to transport an all-zero octet over a DS1/1.544 Mbps BellSouth SPA High Capacity channel and will provide an available combined maximum 1.536 Mbps data rate. This arrangement requires the IC signal at the channel interface to conform to Bipolar with eight (8) Zero Substitution (B8ZS) line code as described in Technical Reference TR-NPL-000054 and TR-INS-000342.

(2) This optional feature may be ordered at the same time the DS1/1.544 Mbps BellSouth SPA High Capacity service is ordered, or it may be ordered as an additional feature of an existing DS1/1.544 Mbps BellSouth SPA High Capacity service.

(3) When providing CCC via a DS3/44.736 Mbps BellSouth SPA High Capacity channel, that DS3 channel must be designated, in BellSouth records, as having Clear Channel Capability prior to the provisioning of a DS1/1.544 Mbps BellSouth SPA High Capacity channel with CCC. ICs must agree to out-of-service periods required to add this feature to: (1) an existing DS1/1.544 Mbps BellSouth SPA High Capacity channel or (2) a DS3/44.736 Mbps BellSouth SPA High Capacity channel which transports a DS1/1.544 Mbps BellSouth SPA High Capacity channel to be optioned for B8ZS.

h. TCAP Message Transmission

This option provides for the transmission of information corresponding to TIA Interim Standard 41 (Sub-systems 005-010) over a ***customer***'s CCS7 Signaling Connection. TCAP Messages will be routed according to originating and destination point codes provided by the ***customer***. (C)

This option requires the utilization of CCS7 Signaling Connections and CCS7 Signaling Terminations between the ***customer***'s signaling point of interface ***(SPOI)*** and each of the Telephone Company's Signal Transfer Point (STPs) within the LATA. (C)

This option is available where facilities and switching capability are available.

i. BellSouth SPA High Capacity and BellSouth SWA DS0 Transport Services

BellSouth SPA High Capacity services consist of BellSouth SWA DS1 and BellSouth SWA DS3 Local Channels and BellSouth SWA DS0, BellSouth SWA DS1 and BellSouth SWA DS3 Interoffice Channels. BellSouth SWA DS1 and BellSouth SWA DS3 Local Channels consists of a basic channel between the IC's premises and the IC's serving wire center.

For BellSouth SWA Dedicated Transport, the BellSouth SWA DS0 (Digital Voice Grade) and BellSouth SWA DS1 and BellSouth SWA DS3 Interoffice Channels are provided between the IC serving wire center to any of the following IC designated points: (1) the Company end office, (2) the Access Tandem, (3) Company Facility Hub (Hub), or between (4) a Hub and Company end office, or (5) a Hub and an Access Tandem and, (6) a Hub and a Hub. Channel type and service descriptions are provided in Section E7. of this Tariff.

(1) BellSouth SWA DS0 Service

BellSouth SWA DS0 Service (Digital Voice Grade) is a channel for duplex four-wire transmission at the rate of 56.0 and 64.0 Kbps. BellSouth SWA DS0 service is provided as a BellSouth SWA Dedicated Interoffice Channel between the foregoing IC designated points.

E6. BELLSOUTH SWA SERVICE

E6.1 General (Cont'd)

E6.1.3 Rate Categories (Cont'd)

A. BellSouth SWA Transport (Cont'd)

9. Optional Features (Cont'd) (T)

i. BellSouth SPA High Capacity and BellSouth SWA DS0 Transport Services (Cont'd)

(2) BellSouth SWA DS1 Service

BellSouth SWA DS1 service is a high capacity channel service provided between the IC premises and the IC's serving wire center as a Switched Local Channel to be associated with Interface Group 6. BellSouth SWA DS1 service can also be provided as a Switched Dedicated Interoffice Channel between the foregoing IC designated points.

(3) BellSouth SWA DS3 Service

BellSouth SWA DS3 service is a high capacity channel service provided between the IC premises and the IC's serving wire center as a Switched Local Channel to be associated with Interface Group 9. BellSouth SWA DS3 service can also be provided as a Switched Dedicated Interoffice Channel between the foregoing IC designated points.

Single BellSouth SWA DS3 Switched Local Channels are available for IC premises to IC serving wire center application. Channelization Equipment is required for DS3 level services whenever an IC orders lower capacity Switched Interoffice Channels or terminates in Company serving wire centers, Company facility Hubs, and office switch(es) or Access Tandems. Company Facility Hubs offer digital channelization in accordance with E6.7.18 ***following*** and E7.4.7 ***of this Tariff***. For technical specifications, see Section E7. ***of this Tariff.*** (T)

Rates specific to BellSouth SPA High Capacity and BellSouth SWA DS0 Transport Services are shown in E6.8.1 following.

(4) Channelization Equipment

Channelization Equipment (CE) provides for the multiplexing equipment necessary to channelize digital facilities to individual services requiring a lower capacity or bandwidth. Channelization equipment is required when: (1) Any facility carrying a combination of trunk side and line side services terminating to an end office switch; and (2) Any termination of a DS3 facility, and (3) when any facility carrying a combination of switched and special access circuits terminates to an end office switch. Two levels of multiplexing are available: (1) DS3 to DS1; and (2) DS1 to DS0 or Analog. The NECA No. 4 identifies Company Offices (Facility Hubs) where multiplexing functions are available.

The CE rate category for DS1 level service consists of two rate elements: (1) Basic Channelization System; and (2) Central Office Channel Interface(s). The CE rate category for DS3 level service consists of two rate elements: (1) Switched DS3 Channelization System; and (2) the Central Office Channel Interface.

DS3 to DS1 - An arrangement that channelizes 44.736 Mbps channel to 28 DS1 channels.

DS1 Basic Channelization System - An arrangement that channelizes a 1.544 Mbps channel to a maximum of twenty-four (24) 64 Kbps channels. A DS1 Basic Channelization System requires a Central Office Channel Interface for each channel of lesser capacity.

A BellSouth SWA DS1 that is directly terminated into a digital switch is restricted to trunk side switched traffic and cannot be used for line side connections or BellSouth SPA Circuits.

E6. BELLSOUTH SWA SERVICE

E6.1 General (Cont'd)

E6.1.3 Rate Categories (Cont'd)

A. BellSouth SWA Transport (Cont'd)

9. Optional Features (Cont'd)

i. BellSouth SPA High Capacity and BellSouth SWA DS0 Services (Cont'd)

(4) Channelization Equipment (Cont'd)

A BellSouth SWA DS1 that is directly terminated into an analog switch is restricted to trunk side switched traffic and cannot be used for line side connections or BellSouth SPA Circuits.

The Central Office Channel Interface (COCI) rate element is necessary to activate the Sub DS1 Service capable of carrying BellSouth SWA traffic. The COCI is required in addition to the Basic Channelization System.

Rates applicable to the Channelization Systems and the applicable Central Office Channel Interfaces are provided in E6.8.1 following.

j. Channelization for Common Transport Interoffice Channels

(1) DS3 to DS1 Multiplexer

This rate element is for use of DS3 to DS1 multiplexer equipment within the Company common transport network and is required for ICs utilizing BellSouth SWA Common Transport. The rate element applies for each BellSouth SWA Common Transport minute of use between the access tandem and the end office, as well as for each minute of use between a host and remote end office, and each terminating minute of use between a host and remote end office, and each terminating minute of use between a BellSouth SWA FGA or BellSouth SWA LSBSA dial tone office and the end office. The rate for this element is found in E6.8.1 following.

(2) DS1 to VG Multiplexer

This rate element is for DS1 to VG multiplexer equipment within the Company common transport network on the end office side of analog access tandem switches. This element is required for ICs utilizing BellSouth SWA Common Transport with an analog tandem switch. The rate for this element is found in E6.8.1 following.

k. Tandem Signaling

This option provides for the automatic transmission of signaling indicators which identify the interexchange carrier and trunk group to which the call is to be directed. This option, available with BellSouth SWA FGD, is provided on originating direct trunk groups.

Direct trunk groups equipped with tandem signaling can be arranged to overflow to other direct trunk groups equipped with tandem signaling. Direct trunk groups equipped with tandem signaling cannot be arranged to overflow to the Company's common trunk groups.

Depending on the signaling facilities available, this option will be provisioned via MF or CCS7 signaling. The CCS7 alternative requires the establishment of: 1) BellSouth SWA CCSAC as described in **f.** preceding and 2) CCS7 Signaling Connections and CCS7 Signaling Terminations between the customer's signaling point of interface and each of the Telephone Company's STPs.

l. Surveillance Optional Feature **(N)**

BellSouth SWA DS1 and DS3 Transport services may terminate into FlexServ Service (a.k.a. BellSouth SPA Customer Reconfiguration) as set forth in E7 of this Tariff for surveillance only. These SWA channel terminations are not available for reconfiguration. Rates and charges for the surveillance options are provided in E7.4.12 of this Tariff. **(N)**

All BellSouth marks contained herein and as set forth in the trademarks and servicemarks section of this Tariff are owned by BellSouth Intellectual Property Corporation.

E6. BELLSOUTH SWA SERVICE

E6.1 General (Cont'd)

E6.1.3 Rate Categories (Cont'd)

A. BellSouth SWA Transport (Cont'd)

10. BellSouth Dedicated Ring (N)

a. The BellSouth Dedicated Ring configuration utilizes a multi-nodal ring architecture which is specified jointly by the Company and the customer. The minimum configuration provides dedicated DS3 and/or DS1 digital services and must include at least three nodes. The three nodes may all be Central Office Nodes in Company Central Offices, or the three nodes may be a Central Office Node in Company Central Office, a Customer Node at a customer's designated location and the third node may be either a Central Office Node or a node at a another customer designated location. Additional nodes for either arrangement may be any combination thereof. The maximum number of nodes will be determined based on equipment capability. The nodes are connected by BellSouth Dedicated Ring Local Channels, Alternate Central Office Channels, Interoffice Channels and Internodal Channels as applicable. BellSouth Dedicated Ring may be connected to other BellSouth SWA services only at Central Office Nodes. When BellSouth Dedicated Ring works with OC-12 SMARTRing® service (a.k.a. BellSouth Dedicated Ring) installed on or after June 3, 1994, and with OC-48 and OC-48+ SMARTRing® service (a.k.a. BellSouth Dedicated Ring), the customer may request an OC-1 and/or OC-3 Overlay Ring Arrangement riding the customer's host OC-12, OC-48, or OC-48+ SMARTRing® service (a.k.a. BellSouth Dedicated Ring). With OC-48 BellSouth Dedicated Ring, the customer may request an OC3+ and/or OC-12 Overlay Ring Arrangement riding the customer's host OC-48 BellSouth Dedicated Ring. (N)

b. Applicable rate elements for this service are: (N)

(1) Local Channel (at least one for each Customer Node which is directly connected to the serving wire center) (N)

The Local Channel rate category provides for the communications path between a Customer Node and the serving wire center of the premises where located. Charges for Local Channels apply as described in paragraph E6.1.3.A preceding. It is available with all capacities of BellSouth Dedicated Ring except OC-1. (N)

(2) Alternate Central Office Channel (at least one for each Customer Node which is directly connected to an Alternate Central Office) (N)

The Alternate Central Office Channel provides for the communications path between a customer node and an alternate central office. It is available with all capacities of BellSouth Dedicated Ring except OC-1. (N)

(3) Interoffice Channel (one for each path between each two directly connected Company Central Offices) (N)

The Interoffice Channel provides for the communications path between directly connected Company central offices located on a BellSouth Dedicated Ring. It is available with all capacities of BellSouth Dedicated Ring except OC-1. This rate element does not apply where Central Office Nodes are adjacently connected in the same Central Office on the same Dedicated Ring for the purpose of providing additional node capacity. (N)

(4) Internodal Channel (one for each path between two directly connected customer nodes) (N)

The Internodal Channel provides for the communications path between two directly connected Customer Nodes of a given BellSouth Dedicated Ring located (a) in the same Serving Wire Center area or (b) in the same Office Park/Campus Environment or contiguous property, located in contiguous Serving Wire Center areas. It is available with all capacities of BellSouth Dedicated Ring except OC-1. This rate element does not apply where Customer Nodes are adjacently connected in the same building on the same Dedicated Ring for the purpose of providing additional node capacity. (N)

(5) Customer Node (at least one for configurations other than three Central Office Node arrangement) (N)

Customer Nodes provide ring switching capabilities at customer designated locations other than Company Premises that are part of BellSouth Dedicated Ring. This rate element offers OC-3, OC-3+, OC-12, OC-48, or OC-48+ network capacities. A summary of the channel interfaces available with each node are specified in E6.2.11.A following. (N)

® Registered Service Mark of BellSouth Corporation

E6. BELLSOUTH SWA SERVICE

E6.1 General (Cont'd)

E6.1.3 Rate Categories (Cont'd)

A. BellSouth SWA Transport (Cont'd) (N)

10. BellSouth Dedicated Ring (Cont'd) (N)

b. Applicable rate elements for this service are: (Cont'd) (N)

(6) Customer Channel Interface (one for each originating/terminating activated DS1, DS3, STS-1, OC-3, and/or OC-12 for each Customer Node) (N)

A Customer Channel Interface provides DS1, DS3, STS-1 electrical channelization and/or OC-3 and/or OC-12 optical channelization that may take place at each Customer Node of BellSouth Dedicated Ring. The Customer Channel Interface rate element applies for every interface capacity that originates or terminates at a Customer Node. A summary of the channel interfaces available with each node are specified in E6.2.11.A following. (N)

(7) Central Office Node (at least one for configurations other than three Central Office Node arrangement) (N)

Central Office Nodes provide ring switching capabilities at Company Central Offices that are a part of BellSouth Dedicated Ring. This rate element offers OC-3, OC-3+, OC-12, OC-48, and OC-48+ network capacities. A summary of the channel interfaces available with each node are specified in E6.2.11.A following. (N)

(8) Central Office Channel Interface (one for each originating/terminating activated DS1, DS3, STS-1, OC-3 and/or OC-12 for each Central Office Node or one for each 28 DS1 Channel System and associated DS1 Channel Interfaces for each activated DS3) (N)

A Central Office Channel Interface provides DS1, DS3, STS-1 electrical channelization and/or OC-3 and/or OC-12 optical channelization that may take place at each Central Office Node located on a BellSouth SPA Dedicated Ring. The Central Office Channel Interface rate element applies for every interface capacity that originates or terminates at a Central Office Node. A summary of the channel interfaces available with each node are specified in E6.2.11.A following. (N)

(9) Channel Interface Capacity Reallocation (one per node per occurrence) (N)

Channel Interface Capacity Reallocation allows the customer to reallocate STS-1, DS3 and/or DS1 capacity interfaces at each node subsequent to the initial service installation. (N)

E6. BELLSOUTH SWA SERVICE

E6.1 General (Cont'd)

E6.1.3 Rate Categories (Cont'd)

A. BellSouth SWA Transport (Cont'd)

10. BellSouth Dedicated Ring (Cont'd) (N)

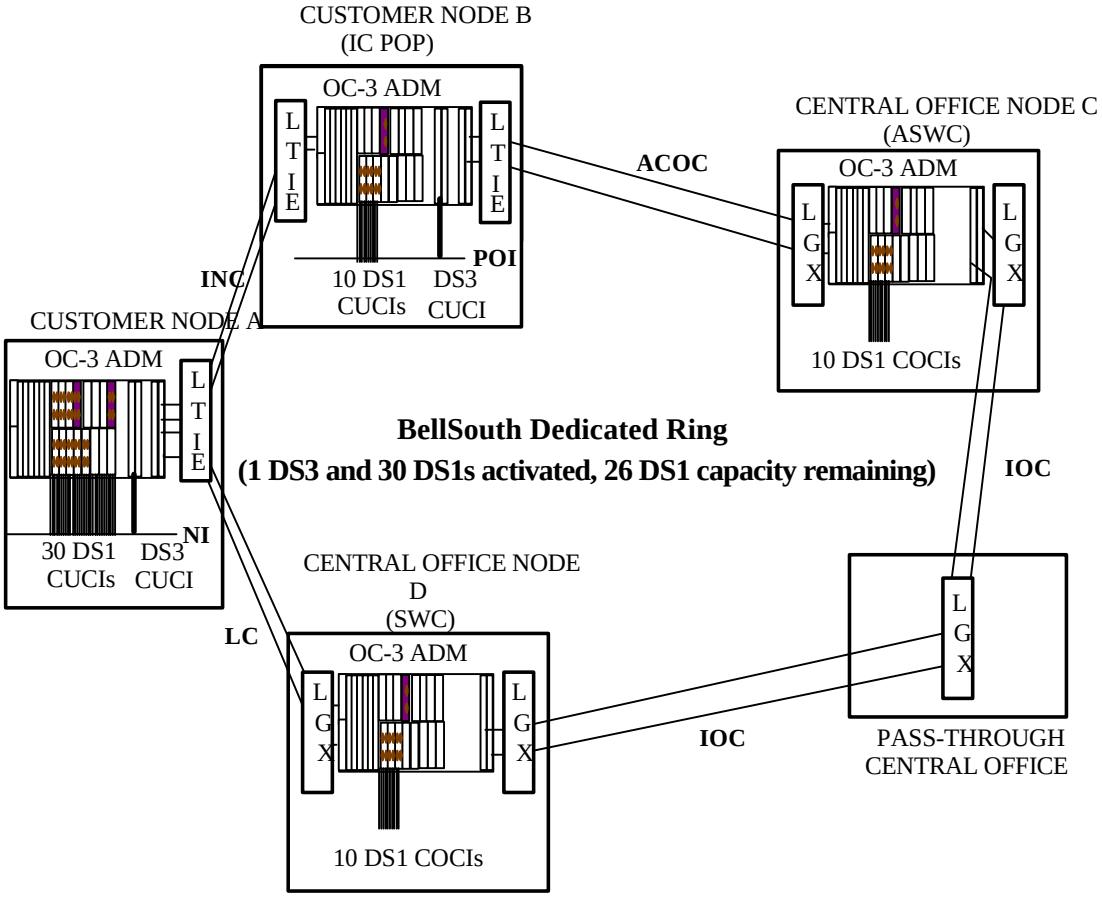

(N)

Example: BellSouth Dedicated Ring OC-3 capacity (N)

For this example the following rate elements are applicable: (N)

- 2 Customer Nodes (N)
- 2 Central Office Nodes (N)
- 1 Local Channel (N)
- 1 Internodal Channel (N)
- 1 Alternate Central Office Channel (N)
- 2 Interoffice Channels (N)
- 2 DS3 Customer Channel Interfaces (N)
- 40 DS1 Customer Channel Interfaces (N)
- 20 DS1 Central Office Channel Interface (N)

E6. BELLSOUTH SWA SERVICE

E6.1 General (Cont'd)

E6.1.3 Rate Categories (Cont'd)

A. BellSouth SWA Transport (Cont'd)

10. BellSouth Dedicated Ring (Cont'd) (N)

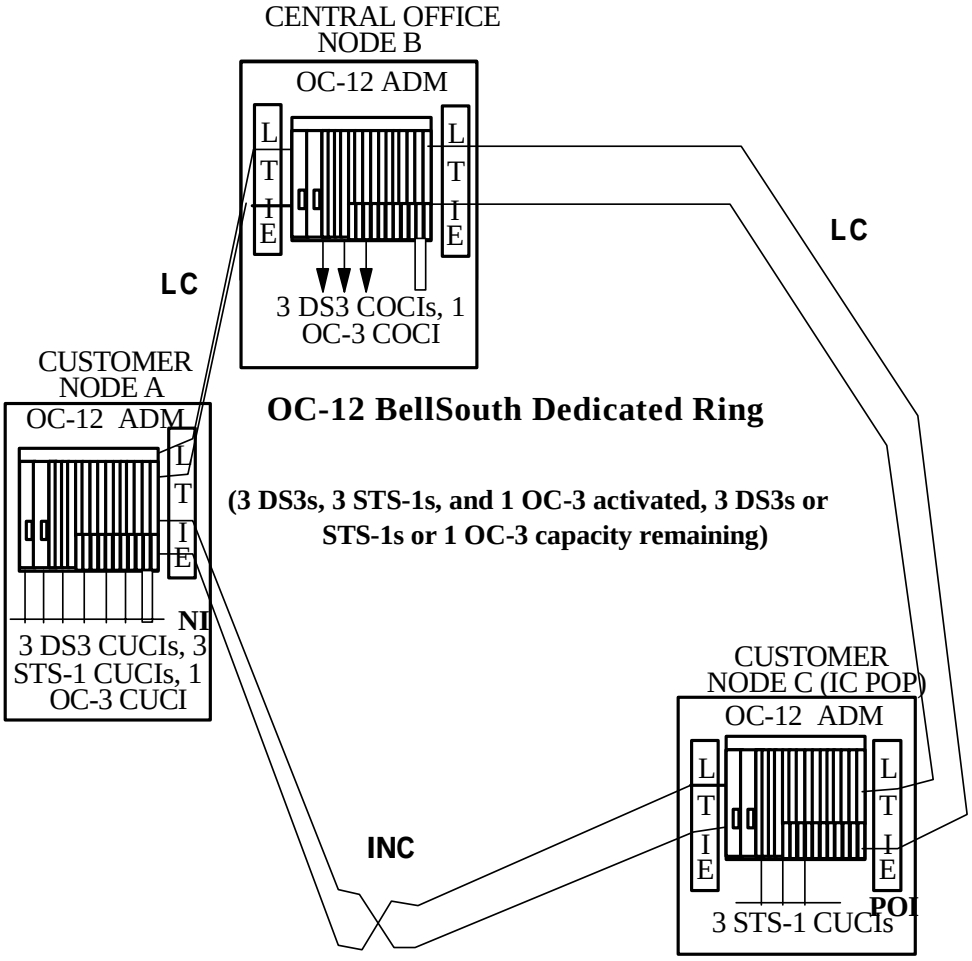

(N)

Example: BellSouth Dedicated Ring OC-12 capacity (N)

For this example the following rate elements are applicable:

- 2 Customer Nodes (N)
- 1 Central Office Node (N)
- 2 Local Channels (N)
- 1 Internodal Channel (N)
- 3 DS3 Customer Channel Interfaces (N)
- 3 DS3 Central Office Channel Interfaces (N)
- 6 STS-1 Customer Channel Interfaces (N)
- 1 OC-3 Customer Channel Interface (N)
- 1 OC-3 Central Office Channel Interface (N)

E6. BELLSOUTH SWA SERVICE

E6.1 General (Cont'd)

E6.1.3 Rate Categories (Cont'd)

A. BellSouth SWA Transport (Cont'd)

10. BellSouth Dedicated Ring (Cont'd) (N)

(N)

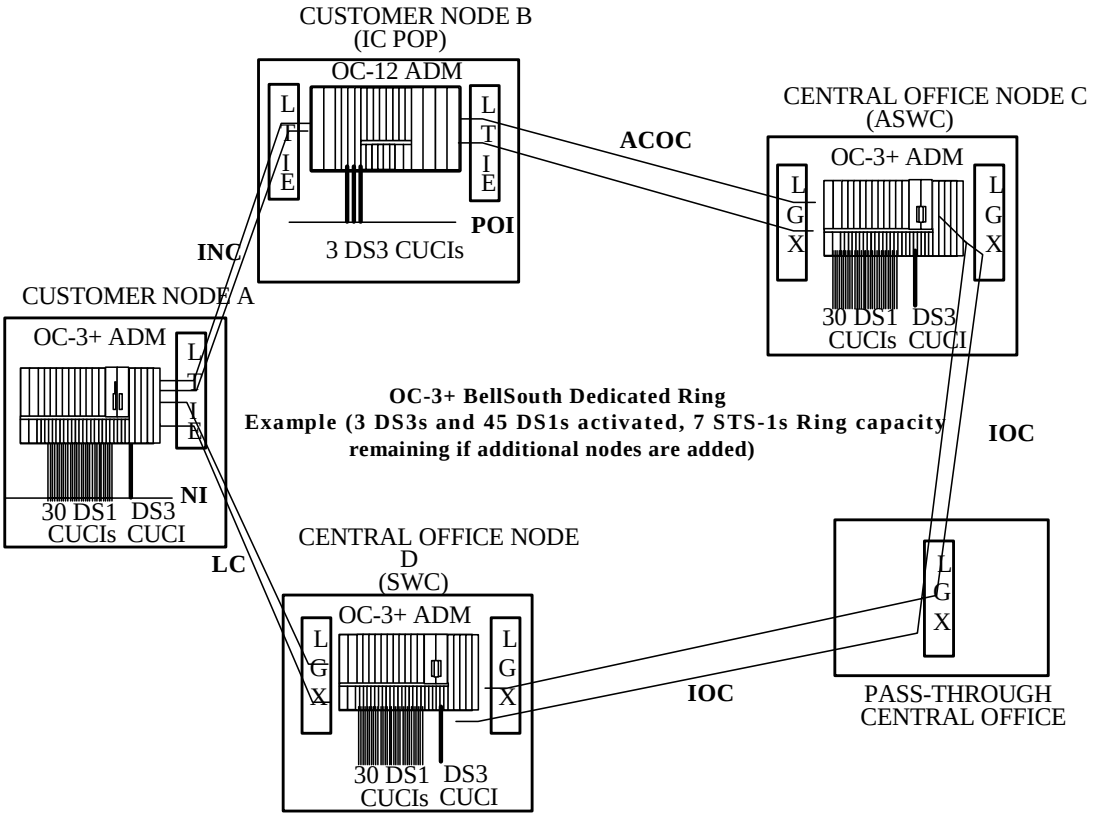

Example: BellSouth Dedicated Ring OC-3+ capacity. (N)

For this example the following rate elements are applicable: (N)

- 2 Customer Nodes (N)
- 2 Central Office Nodes (N)
- 1 Local Channel (N)
- 1 Internodal Channel (N)
- 1 Alternate Central Office Channel (N)
- 2 Interoffice Channels (N)
- 4 DS3 Customer Channel Interfaces (N)
- 2 DS3 Central Office Channel Interfaces (N)
- 30 DS1 Customer Channel Interfaces (N)
- 60 DS1 Central Office Channel Interfaces (N)

E6. BELLSOUTH SWA SERVICE

E6.1 General (Cont'd)

E6.1.3 Rate Categories (Cont'd)

A. BellSouth SWA Transport (Cont'd)

10. BellSouth Dedicated Ring (Cont'd) (N)

(N)

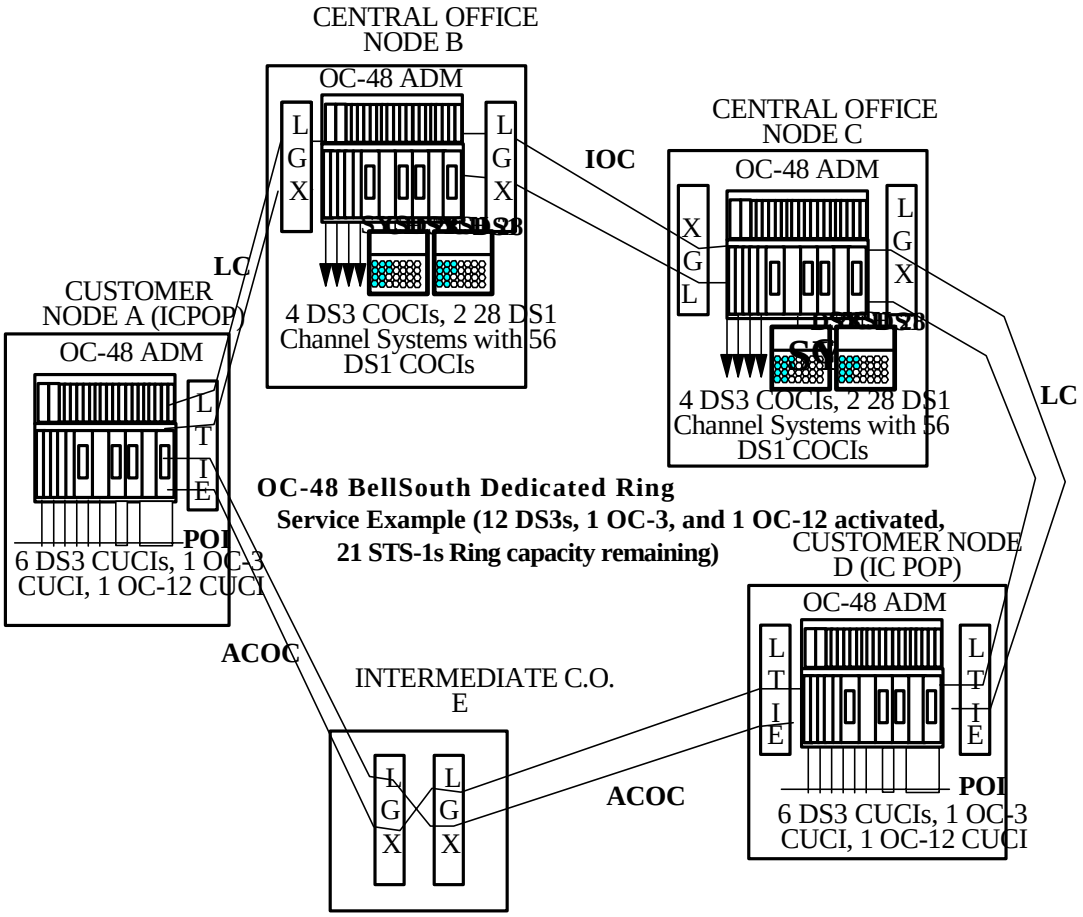

Example: BellSouth Dedicated Ring OC-48 capacity. (N)

For this example the following rate elements are applicable: (N)

- 2 Customer Nodes (N)
- 2 Central Office Nodes (N)
- 2 Local Channels (N)
- 2 Alternate Central Office Channels (N)
- 1 Interoffice Channel (N)
- 12 DS3 Customer Channel Interfaces (N)
- 8 DS3 Central Office Channel Interfaces (N)
- 4 28 DS1 Channel Systems (DS3) (N)
- 112 DS1 Central Office Channel Interfaces (N)
- 2 OC-3 Customer Channel Interfaces (N)
- 2 OC-12 Customer Channel Interfaces (N)

E6. BELLSOUTH SWA SERVICE

E6.1 General (Cont'd)

E6.1.3 Rate Categories (Cont'd)

A. BellSouth SWA Transport (Cont'd)

10. BellSouth Dedicated Ring (Cont'd) (N)

(N)

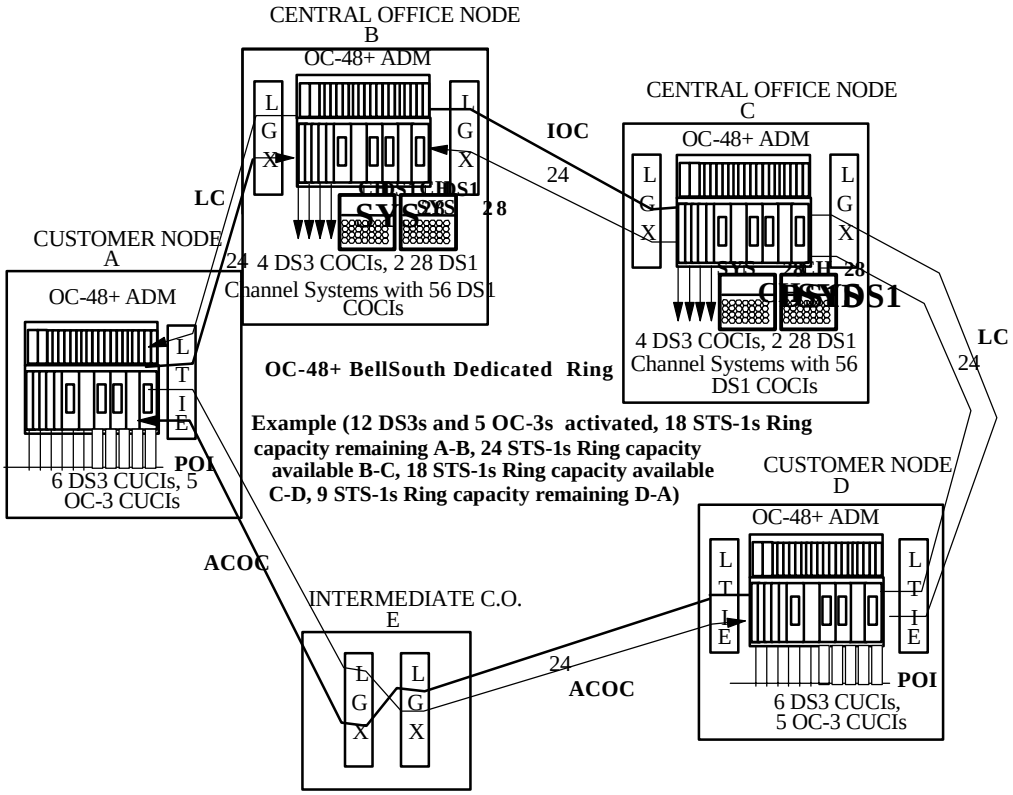

Example: BellSouth Dedicated Ring OC-48+ capacity (N)

For this example the following rate elements are applicable: (N)

- 2 Customer Nodes (N)
- 2 Central Office Nodes (N)
- 2 Local Channels (N)
- 2 Alternate Central Office Channels (N)
- 1 Interoffice Channel (N)
- 12 DS3 Customer Channel Interfaces (N)
- 8 DS3 Central Office Channel Interfaces (N)
- 4 28 DS1 Channel Systems (DS3) (N)
- 112 DS1 Central Office Channel Interfaces (N)
- 10 OC-3 Customer Channel Interfaces (N)

E6. BELLSOUTH SWA SERVICE

E6.1 General (Cont'd)

E6.1.3 Rate Categories (Cont'd)

A. BellSouth SWA Transport (Cont'd)

11. ***Access*** Collocation Cross-Connects (C)

    a. ***Access*** Collocation Cross-Connects provide a means for customers to interconnect their virtual collocation arrangements to their BellSouth SWA DS1 and BellSouth SWA DS3 Local Channels, Interoffice Channels and Channelization equipment within the same ***C***entral ***O***ffice. ***Terms, conditions, and*** rates ***for Physical Access Collocation Cross-Connects and*** Virtual ***Access*** Collocation Cross-Connects are ***set forth*** in ***Section E13. of this Tariff.*** (C)

12. Channels for use with BellSouth SWA Managed Shared Network Service

    a. BellSouth SWA Managed Shared Network Service is a service under which the customer assigns to the Telephone Company the responsibility for facility design and engineering and routing of BellSouth SWA DS1 and DS0-level dedicated transport for switched access services from serving wire centers in a LATA to the customer's Aggregation Location(s) in the same LATA.

    b. Applicable rate elements for this service are:

    - The BellSouth SWA Managed Shared Network Service local channel charges apply for the DS3 local channels utilized to deliver BellSouth SWA Managed Shared Network Service traffic to the customer, either at an Aggregation Location or at an associated Alternate Aggregation Location. The specific BellSouth SWA Managed Shared Network Service DS3 local channel charge which applies is dependent upon the total quantity of DS3 local channels utilized to carry BellSouth SWA Managed Shared Network Service traffic and BellSouth SPA Managed Shared Network Service traffic, which is associated with a given Aggregation Location, on a per Aggregation Location basis.

    - BellSouth SWA Managed Shared Network Service DS1 or DS0 interface and interoffice charges apply based upon the level of the service (i.e., DS1 or DS0) collected at an Origination Location. The DS1 Interface may be either a DS1 Interface associated with nonchannelized DS1 service or it may be a DS1 Message Trunk Interface when the DS1 is used to provide message trunk terminations. The DS0 Interface may be either for a DS0 line side connection or for a DS0 trunk side connection. Interface charges apply at the Aggregation Location's serving wire center. Mileage for BellSouth SWA Managed Shared Network Service interoffice channels is measured from the Origination Location to the serving wire center of the traffic's associated Aggregation Location. For BellSouth SWA Managed Shared Network Service interoffice channels, which terminate in different zones, the highest zone rate will apply (i.e., Zone 1 is the lowest and Zone 3 is the highest).

All BellSouth marks contained herein and as set forth in the trademarks and servicemarks section of this Tariff are owned by BellSouth Intellectual Property Corporation.

E6. BELLSOUTH SWA SERVICE

E6.1 General (Cont'd)

E6.1.3 Rate Categories (Cont'd)

B. Local Switching (M)

The Local Switching rate category provides for (1) the local end office switching (i.e., the switching functions associated with the various BellSouth SWA Service arrangements), (2) the termination of BellSouth SWA Transport at end offices, (3) the termination of common lines and BellSouth SWA WATS Service lines at end offices and (4) intercept functions (i.e., the termination of certain calls at a Company intercept operator or recording). This category includes usage sensitive rates and both chargeable and nonchargeable optional features and basic service elements. (M)

1. Usage Sensitive Rates (M)

The Local Switching usage sensitive rate elements provide for the use of end office switching equipment. It is applied on a per minute of use basis and divided into four categories: (1) LS1, provides local dial switching for originating and terminating BellSouth SWA FGA and B; (2) LS2, provides local dial switching for BellSouth SWA FGC and BellSouth SWA FGD; (3) LS3, provides local dial switching for BellSouth SWA FG LSBSA and BellSouth SWA FG TSBSA 1 originating and terminating and (4) LS4, provides local dial switching for BellSouth SWA FG TSBSA 2 and BellSouth SWA FG TSBSA 3 originating and terminating. (M)

LS1, LS2, LS3, and LS4 use is measured on an originating and terminating basis. Rates for LS1, LS2, LS3, and LS4 use are applied on a total number of access minutes of use basis, as set forth in E6.8.3.A. following. (M)

The Common Trunk Port service provides for termination of BellSouth SWA Common Transport trunk facilities at end office switches. The charge applies per MOU per trunk termination at end offices including host and remote end office switches. The charge also applies at the BellSouth SWA FGA and BellSouth SWA dial tone offices and terminating offices in those cases where terminating BellSouth SWA FGA and BellSouth SWA LSBSA traffic terminates at an office other than the BellSouth SWA FGA or BellSouth SWA LSBSA dial tone office. The application of these rates is as set forth in E6.8.2 following. (M)

Dedicated End Office Trunk Port Service (M)

The Dedicated End Office Trunk Port Service provides for termination of dedicated transport trunk facilities at the end office switch. This service is required with dedicated transport to an end office and is available on a dedicated DS0/VG trunk port basis on a dedicated DS1 trunk port basis. These elements apply per each dedicated DS0/VG and each DS1 transport facility terminated at an end office. Rates are set forth in E6.8.2 following. (M)

There are two types of local switching functions: Common Switching functions and BellSouth SWA Transport Termination functions. These are described in a. and b. following. (M)

Various Common Switching, BellSouth SWA Transport Termination and BellSouth SWA WATS Service Termination optional features and BSEs are available and are described in E6.3 following. (M)

a. Common Switching (M)

(1) The Common Switching provides the local end office switching functions associated with the various access (i.e., BellSouth SWA FG and BellSouth SWA Basic Serving Arrangement) switching arrangements. The Common Switching arrangements provided for the various BellSouth SWA FG and Basic Serving Arrangement arrangements are described in E6.2 following. (M)

(2) Included as part of the Common Switching are various optional features which the IC can order to meet its specific communications requirements. These optional features are described in E6.3.1, E6.3.2 and E6.3.4 following. (M)

E6. BELLSOUTH SWA SERVICE

E6.1 General (Cont'd)

E6.1.3 Rate Categories (Cont'd)

B. Local Switching (Cont'd)

1. Usage Sensitive Rates (Cont'd)

a. Common Switching (Cont'd)

(3) Included as part of the Common Switching are various chargeable Basic Service Elements (BSEs) which the IC can order to meet its specific communications requirements. These BSEs are described in E6.3.3 and E6.3.5 following.

b. Switched Transport Termination

(1) BellSouth SWA Transport Termination provides for the line or trunk side arrangements which terminate the BellSouth SWA Transport facilities. Included as part of BellSouth SWA Transport Termination are various optional termination arrangements. These optional terminating arrangements are described in E6.3.6 following.

(2) The number of BellSouth SWA Transport Terminations provided will be determined by the Company as set forth in E6.5.6 following.

C. BellSouth CCS7 Access Arrangement (N)

1. Service Description (N)

BellSouth CCS7 Access Arrangement allows for customer interconnection to the Company at designated Signal Transfer Points (STP) for use with services that require receiving and terminating signaling information using the common channel signaling protocol. CCS7 Access is provided for use with the BellSouth SWA CCSAC option, and described in A.9.e. preceding. For each connection, the customer must order a CCS7 Access Connection and CCS7 Access Termination. The CCS7 Access Arrangement is provided as follows. (N)

a. The CCS7 Signaling Connection provides a 2-way digital 56 kbps facility, dedicated to a single customer, which originates at the customer's signaling point of interconnection in a LATA and terminates at a Company Signal Transfer Point (STP) selected by the Company. (N)

b. The CCS7 Signaling termination provides a dedicated point of interface at a Company STP for customer's CCS7 Signaling Connection. (N)

The customer is responsible for reporting to the Company the Percent Interstate Usage (PIU) for CCS7 Access Arrangement as set forth in E2.3.14 of this Tariff. (N)

A customer will be able to obtain access from each of its SPOIs to the Company CCS7 network in one or more LATAs designated by the customer. This arrangement is available for use with Company Feature Group D, TSBSA 1 switched access service and queries to Company databases pursuant to this tariff. (N)

For ordering proposed, CCS7 Signaling Connections and Terminations are ordered from the customer's SPOI to one or more FSPOI locations in the LATA. The customer must order a minimum of two CCS7 Signaling Connections and two CCS7 Signaling Terminations, if the customer's SPOI connects to a customer SSP and a minimum of four CCS7 Signaling Connections and four CCS7 Signaling Terminations, if the customer's SPOI connects to a customer STP. FSPOI locations are set forth in the NECA Tariff FCC No. 4. (N)

E6. BELLSOUTH SWA SERVICE

E6.1 General (Cont'd)

E6.1.3 Rate Categories (Cont'd)

C. BellSouth CCS7 Access Arrangement (Cont'd) (N)

2. BellSouth SWA CCS7 Access Arrangement Usage (N)

BellSouth SWA CCS7 Access Arrangement Usage provides for the use of the Company's CCS7 Access Arrangement network for the transmission of call set-up and non-call set-up traffic. The two types of usage available are as follows: (N)

a. Integrated Switched Digital Network User Part (ISUP) messages, which are used to provide the signaling set-up, supervise and release calls. ISUP usage charges will be assessed per signaling messages delivered to or from the customer, regardless of direction, through its dedicated port connection with Company provided Feature Group D. Specific types of ISUP messages are: (N)

ACM - Address Complete Message (N)

ANM - Answer Message (N)

CPG - Call Progress (N)

FOT - Forward Transfer Message (N)

IAM - Initial Address Message (N)

PAM - Pass Along Message (N)

REL - Release (N)

RES - Resume (N)

RLC - Release Complete Message (N)

SUS - Suspend (N)

b. Transaction Capabilities Application Part (TCAP) signaling messages are used to provide information to route calls to the appropriate service provider not related to a voice call. TCAP usage charges will be assessed per signaling message delivered to the customer, regardless of direction, for such services as Toll Free Access Service, 500 Access Service, TCAP Message Transmission, Line Information Database (LIDB) service, Enhanced Originating Line Screening (EOLS) service and LNP Query. Specific types of TCAP Messages are: (N)

ABT - Abort (N)

CON - Conversion Without Permission Message (N)

CWP - Conversion With Permission Message (N)

QUE - Query Without Permission Message (N)

QWP - Query With Permission Message (N)

RSP - Response Message (N)

UNI - Unidirectional (N)

E6. BELLSOUTH SWA SERVICE

E6.1 General (Cont'd)

E6.1.3 Rate Categories (Cont'd)

D. BellSouth SWA 500 Service (T)

The BellSouth SWA 500 service rate category includes the use of switch based translations and the use of transmission facilities and functions between a Service Switching Point (SSP) equipped switch and a Service Control Point (SCP) by the Company to provide for BellSouth SWA 500 service. Rate elements and rates associated with this category are provided in E6.8.13 following.

E. 800 Database (T)

The 800 Database rate category includes the use of transmission facilities and functions between a Service Switching Point (SSP) equipped end office or access tandem and a Service Control Point (SCP) by the Company to provide for BellSouth SWA 8XX Toll Free Dialing Ten Digit Screening Service. Rate elements and rates associated with this category are provided in E6.8.4, following.

E6.1.4 Special Facilities Routing

An IC may request that the facilities used to provide BellSouth SWA service be specially routed. The regulations, rates and charges for Special Facilities Routing (i.e., Avoidance, Diversity and Cable Only) are set forth in Section E11. ***of this Tariff***. (T)

E6.1.5 Design Layout Report

A. At the request of an IC, the Company will provide to the IC the makeup of the facilities and services provided under this Tariff as BellSouth SWA to aid the IC in designing its overall service. This information will be provided in the form of a Design Layout Report.

B. The Design Layout Report will be provided to the IC at no charge, and will be reissued or updated whenever these facilities are materially changed.

E6. BELLSOUTH SWA SERVICE

E6.1 General (Cont'd)

E6.1.6 Acceptance Testing

A. At no additional charge, the Company will, at the IC's request, cooperatively test the following parameters, at the time of installation, the loss, C-notched noise, C-message noise, 3-tone slope, d.c. continuity and operational signaling. When the BellSouth SWA Transport is provided with Interface Groups 2, 6 and 9 and the BellSouth SWA Transport Termination is two-wire (i.e., there is a four-wire to two-wire conversion in BellSouth SWA Transport), balance parameters (equal level echo path loss) may also be tested. When the service is provided totally via digital facilities (i.e., digital switch and digital transport), the Company will, at the IC's request, cooperatively test at the time of installation the following at no additional charge: operational signaling for each circuit provided and loss for one circuit per digital group provided.

B. When BellSouth SWA FGD with the BellSouth SWA CCSAC option is ordered, network compatibility and other operational tests will be performed cooperatively by the Company and the ***customer***. These tests are as specified in the BellSouth Guidelines to Technical Publication TR-TSV-000905.

C. For BellSouth SWA FGD or BellSouth SWA TSBSA 3 trunks equipped with the 64 Clear Channel Capability (64 CCC) option, tests will be performed to verify the integrity of the 64 Kbps service. 64 Kbps service testing, for ICs with 108 test line capability, will be made to the IC's 108 test line. For ICs without 108 test line capability, tests will be made to the demarcation point at the POP (Point of Presence). One trunk per DS1 facility will be tested.

E6.1.7 Ordering Options and Conditions

A. The Access order as set forth in Section E5. preceding is used in the provision of BellSouth SWA service. Also, included in that section are other charges, which may be associated with ordering BellSouth SWA service (e.g., Service Date Change Charges, Cancellation Charges, etc.).

B. For purposes of this Section, services requested on multiple Access Service Requests (ASRs) placed with the Company on a given day, for multiple lines to the same end office or multiple trunks on a common trunk group with the same premises interface code, will be treated as one request when the ASRs are related together by the IC.

C. Terms and conditions for BellSouth Virtual Expanded Interconnection service are set forth in BellSouth Telecommunications, Inc., Tariff F.C.C. No. 1, Section 20. Virtual Collocation Cross-Connect rates and charges are provided in E6.8.1 following.

E6.1.8 BellSouth Access Collocation Cross-Connect Service (N)

A. Terms, conditions, and rates for the following BellSouth Access Collocation Cross-Connect Services are as set forth in Section E13. of this Tariff. (N)

- Physical Access Collocation Cross-Connect Service (N)
- Virtual Access Collocation Cross-Connect Service (N)

E6.2 Provision and Description of BellSouth SWA Service Arrangements

BellSouth SWA service is provided in four different BellSouth SWA FG arrangements and two BellSouth SWA Basic Serving Arrangements (BSAs). The provision of Service Categories requires the applicable BellSouth SWA Transport component and the appropriate Local Switching functions. In addition, Dedicated Access Lines may be provided with BellSouth SWA FGC**,** BellSouth SWA FGD, and BellSouth SWA TSBSA 2 and BellSouth SWA TSBSA 3. There are also various common switching BSEs available with the BellSouth SWA Basic Serving Arrangements. The BellSouth SWA Transport, Common Switching and BellSouth SWA Transport Termination optional features as well as common switching BSEs are available at all Company end office switches, unless stated otherwise.

There are three specific transmission performances (i.e., Types A, B and C) that have been identified for the provision of BellSouth SWA services. The specifications provided are dependent on the Interface Group ordered. The parameters for the transmission specifications are set forth in E6.4.1 following.

All BellSouth marks contained herein and as set forth in the trademarks and servicemarks section of this Tariff are owned by BellSouth Intellectual Property Corporation.

E6. BELLSOUTH SWA SERVICE (T)

E6.2 Provision and Description of BellSouth SWA Service Arrangements (Cont'd) (T)

BellSouth SWA FGs are arranged for either originating, terminating or two-way calling, based on the IC end office switching capacity ordered. Originating calling permits the delivery of calls from telephone exchange service locations to the IC terminal location. Terminating calling permits the delivery of calls from the IC terminal location to telephone exchange service locations. Two-way calling permits the delivery of calls in both directions, but not simultaneously. The Company will determine the type of calling to be provided unless the IC specifies in its order that a different type of directional calling is to be provided. In such cases, the Company will work cooperatively with the IC to determine the directionality. (T)

There are various optional features available with the ***BellSouth SWA FGs*** and ***BellSouth SWA Basic Serving Arrangements***. These additional optional features are provided as ***BellSouth SWA*** Transport, Common Switching or ***BellSouth SWA*** Transport Termination options. There are also various common switching BSEs available with ***BellSouth SWA Basic Serving Arrangements***. (T)

Following are detailed descriptions of each of the available ***BellSouth SWA*** Service Arrangement. Each ***BellSouth SWA*** Service Arrangement is described in terms of its specific physical characteristics and calling patterns, the transmission specifications with which it is provided, the optional features available for use with it and the standard testing capabilities. (T)

The Common Switching, ***BellSouth SWA*** Transport Termination optional features and Common Switching BSEs, which are described in E6.3 following, unless specifically stated otherwise, are available at all Company end office switches. (T)

E6.2.1 BellSouth SWA FGA (T)

A. Description

1. ***BellSouth SWA*** FGA is provided in connection with Company electronic and electromechanical end offices. At the option of the IC, ***BellSouth SWA*** FGA is provided on a single or multiple line group basis and is arranged for originating calling only, terminating calling only, or two-way calling. ***BellSouth SWA*** FGA is arranged for use by the IC in the provision of its FX/ONAL service or MTS/WATS type service. (T)

2. ***BellSouth SWA*** FGA provides a line side termination at the first point of switching. The line side termination will be provided with either ground start supervisory signaling or loop start supervisory signaling. The type of signaling is at the option of the IC. (T)

3. The Company shall select the first point of switching, within the selected LATA, at which the line side termination is to be provided unless the IC requests a different first point of switching and Company facilities and measurement capabilities are available to accommodate such a request. When measurement capability does not exist in an office in the LATA, the Company shall select the first point of switching and the assumed minutes of use as described in E6.7.8 following.

4. A seven digit local telephone number assigned by the Company is provided for access to ***BellSouth SWA*** FGA switching in the originating direction. The seven digit local telephone number will be associated with the selected end office switch and is of the form NXX-XXXX. (T)

   If the IC requests a specific seven digit telephone number that is not currently assigned, and the Company can, with reasonable effort, comply with that request, the requested number will be assigned to the IC.

5. ***BellSouth SWA*** FGA switching, when used in the terminating direction is arranged with dial tone start-dial signaling. When used in the terminating direction ***BellSouth SWA*** FGA switching may, at the option of the IC, be arranged for dial pulse or dual tone multifrequency address signaling, subject to availability of equipment at the first point of switching. When ***BellSouth SWA*** FGA switching is provided in a hunt group or uniform call distribution arrangement, all ***BellSouth SWA*** FGA switching will be arranged for the same type of address signaling. (T)

6. No address signaling is provided by the Company when ***BellSouth SWA*** FGA switching is used in the originating direction. Address signaling in such cases, if required by the IC, must be provided by the IC's end user using inband tone signaling techniques. Such inband tone address signals will not be regenerated by the Company and will be subject to the ordinary transmission capabilities of the ***BellSouth SWA*** Transport provided. (T)

E6. BELLSOUTH SWA SERVICE (T)

E6.2 Provision and Description of BellSouth SWA Service Arrangements (Cont'd) (T)

E6.2.1 BellSouth SWA FGA (Cont'd) (T)

A. Description (Cont'd)

7. ***BellSouth SWA*** FGA FX/ONAL switching, when used in the terminating direction, may be used to access valid NXXs in the local calling area of the dial tone office, ***BellSouth SWA*** FGA switching in providing MTS/WATS like service, when used in the terminating direction, may be used to access valid NXXs in the LATA, local operator service (O- and O+) Directory Assistance (411 where available and 555-1212), emergency reporting service (911 where available), exchange telephone repair (611 where available), time or weather announcement services of the Company, community information services of an information service provider, and other IC's services (by dialing the appropriate digits). Charges for ***BellSouth SWA*** FGA terminating calls requiring operator assistance on calls to 611 or 911 will only apply where sufficient call details are available. Additional non-access charges will also be billed on a separate account for (1) an operator surcharge, as set forth in the local exchange tariffs, for local operator assistance (0- and 0+) calls; (2) calls to certain community information services, for which rates are applicable under the Company's General Subscriber Service Tariff; and (3) calls from a ***BellSouth SWA FGA*** line to another IC's service in accordance with that IC's applicable service rates when the Company performs the billing for that IC. For calls to Directory Assistance (411 where available and 555-1212), ***BellSouth SWA*** Usage rates for ***BellSouth SWA*** FGA service will not apply. Instead, the charges in the Company's General Subscriber Service Tariff for Directory Assistance will apply. (T)

8. When a ***BellSouth SWA*** FGA switching arrangement for an individual IC (a single line or entire hunt group) is discontinued at an end office, an intercept announcement is provided. This arrangement provides, for a limited period of time, an announcement that the service associated with the number dialed has been disconnected. (T)

B. Optional Features

1. Common Switching Optional Features
   a. Hunt Group Arrangement
   b. Uniform Call Distribution Arrangement
   c. Nonhunting Number for use with Hunt Group Arrangement or U.C.D. Arrangement
   d. Call Denial
   e. Service Code Denial
   f. Call Screening
2. ***BellSouth SWA*** Transport Termination Optional Features (T)
   a. Two-way operation with dial pulse address signaling and loop start supervisory signaling
   b. Two-way operation with dial pulse address signaling and ground start supervisory signaling
   c. Two-way operation with dual tone multifrequency address signaling and loop start supervisory signaling
   d. Two-way operation with dual tone multifrequency address signaling and ground start supervisory signaling
   e. Terminating operation with dial pulse address signaling and loop start supervisory signaling
   f. Terminating operation with dial pulse address signaling and ground start supervisory signaling

E6. BELLSOUTH SWA SERVICE (T)

E6.2 Provision and Description of BellSouth SWA Service Arrangements (Cont'd) (T)

E6.2.1 BellSouth SWA FGA (Cont'd) (T)

B. Optional Features (Cont'd)

2. ***BellSouth SWA*** Transport Termination Optional Features (Cont'd) (T)

   g. Terminating operation with dual tone multifrequency address signaling and loop start supervisory signaling.

E6. BELLSOUTH SWA SERVICE (T)

E6.2 Provision and Description of BellSouth SWA Service Arrangements (Cont'd) (T)

E6.2.1 BellSouth SWA FGA (Cont'd) (T)

B. Optional Features (Cont'd)

2. ***BellSouth SWA*** Transport Termination Optional Features (Cont'd) (T)
   - h. Terminating operation with dual tone multifrequency address signaling and ground start supervisory signaling
   - i. Originating operation with loop start supervisory signaling
   - j. Originating operation with ground start supervisory signaling
3. ***BellSouth SWA*** Transport Optional Features (T)
   - a. Supervisory Signaling
   - b. IC Specified Entry Switch Receive Level
4. Certain other features which may be available in connection with ***BellSouth SWA FGA*** are provided under the Company's General Subscriber Service Tariff. Examples are: (T)
   - a. Custom Calling Features
   - b. IntraLATA Extensions

C. Transmission Specifications

BellSouth SWA FGA is provided with either Type B or Type C Transmission specifications. The specifications for the associated parameters are guaranteed to the first point of switching. Type C Transmission specifications is provided with Interface Group 1 and Type B is provided with Interface Group 2, 6 or 9. Type DB Data Transmission Parameters are provided with ***BellSouth SWA*** FGA to the first point of switching. (T)

D. Testing Capabilities

BellSouth SWA FGA is provided, in the terminating direction where equipment is available, with seven digit access to balance (100 type) test line and milliwatt (102 type) test line. In addition to the tests described in E6.1.6 preceding which are included with the installation of service, Additional Cooperative Acceptance Testing and Non-Scheduled Testing will be provided as set forth in E13. following. (T)

E6.2.2 BellSouth SWA FGB (T)

A. Description

1. ***BellSouth SWA*** FGB, when directly routed to an end office is provided at appropriately equipped Company electronic end office switches. When provided via Company designated electronic access tandem switches, ***BellSouth SWA*** FGB Switching is provided at Company electronic and electromechanical end office switches. (T)
2. ***BellSouth SWA*** FGB is provided as trunk side switching through the use of end office or access tandem switch trunk equipment. The switch trunk equipment is provided with wink start start-pulsing signals and answer and disconnect supervisory signaling. (T)
3. ***BellSouth SWA*** FGB switching is provided with multifrequency address signaling in both the originating and terminating directions. Except for ***BellSouth SWA*** FGB switching provided with the automatic number identification (ANI) or rotary dial station signaling arrangements as set forth in E6.3, any other address signaling in the originating direction, if required by the IC, must be provided by the IC's customer using inband tone signaling techniques. Such inband tone address signals will not be regenerated by the Company and will be subject to the ordinary transmission capabilities of the ***BellSouth SWA*** Transport provided. (T)

E6. BELLSOUTH SWA SERVICE

E6.2 Provision and Description of BellSouth SWA Service Arrangements (Cont'd)

E6.2.2 BellSouth SWA FGB (Cont'd)

A. Description (Cont'd)

4. The access code for BellSouth SWA FGB switching is a uniform access code. The form of the uniform access code is 950-0XXX or 950-1XXX for carriers. One uniform access code will be assigned to the IC for its domestic communications. This uniform access code will be the assigned access number of all BellSouth SWA FGB service provided to the IC by the Company.

5. BellSouth SWA FGB switching, when used in the terminating direction, may be used to access valid NXXs in the LATA, time or weather announcement services of the Company, community information services of an information service provider and other IC's services (by dialing the appropriate digits). When directly routed to an end office, only those valid NXX codes served by that end office may be accessed. When routed through an access tandem, only those valid NXX codes served by end offices subtending the access tandem may be accessed. The IC will also be billed additional non-access charges for calls to certain community information services for which rates are applicable under the Company's General Subscriber Service Tariff. Additionally, non-access charges will also be billed for calls from a BellSouth SWA FGB trunk to another IC's service in accordance with that IC's applicable service rates when the Company performs the billing function for that IC. Calls in the terminating direction will not be provided to 950-0XXX or 950-1XXX access codes, local operator assistance (0- and 0+), Directory Assistance (411 where available and 555-1212), service codes (611 and 911 where available) 101XXXX access codes. BellSouth SWA FGB may not be switched, in the terminating direction, to BellSouth SWA FGB, BellSouth SWA FGC, BellSouth SWA FGD or BellSouth SWA TSBSA.

6. The Company will establish a trunk group or groups for the IC at end office switches or access tandem switches where BellSouth SWA FGB switching is provided. When required by technical limitations, a separate trunk group will be established for each type of BellSouth SWA FGB switching arrangement provided. Different types of BellSouth SWA FGB or other switching arrangements may be combined in a single trunk group at the option of the Company.

7. When all BellSouth SWA FGB switching arrangements are discontinued at an end office and/or in a LATA, an intercept announcement is provided. This arrangement provides, for a limited period of time, an announcement that the service associated with the number dialed has been disconnected.

8. For BellSouth SWA FGB service provided to a Mobile Telephone Switching Office (MTSO) directly interconnected to a Company access tandem office, the IC will be billed the Switched Local Channel and BellSouth SWA ***Dedicated*** Transport as set forth in E6.7.13 ***following,*** at premium rates only, including the Access Tandem Switching charge and the Interconnection charge. Carrier Common Line and Local Switching charges do not apply. (C)

B. Optional Features

1. Common Switching Optional Features
   a. Automatic Number Identification (ANI)
   b. Up to 7 Digit Outpulsing of Access Digits to IC
   c. Alternate Traffic Routing
2. BellSouth SWA Transport Termination Optional Features
   a. Rotary Dial Station Signaling
3. BellSouth SWA Transport Optional Features
   a. IC Specified Entry Switch Receive Level
   b. Supervisory Signaling
   c. IC Specification of BellSouth SWA Transport Termination

E6. BELLSOUTH SWA SERVICE (T)

E6.2 Provision and Description of BellSouth SWA Service Arrangements (Cont'd) (T)

E6.2.2 BellSouth SWA FGB (Cont'd) (T)

C. Transmission Specifications

BellSouth SWA FGB is provided with either Type B or Type C Transmission Specifications. The specificatons for the associated parameters are guaranteed to the end office when routed directly or to the first point of switching when routed via an access tandem. Type C Transmission Specifications are provided with Interface Group 1, and Type B is provided with Interface Groups 2, 6 or 9. Type DB Data Transmission parameters are provided with FGB to the first point of switching. (T)

D. Testing Capabilities

BellSouth SWA FGB is provided, in the terminating direction where equipment is available, with seven digit access to balance (100 type) test line, milliwatt (102 type) test line, nonsynchronous or synchronous test line, automatic transmission measuring (105 type) test line, data transmission (107 type) test line, loop around test line, short circuit test line and open circuit test line. In addition to the tests described in E6.1.6 preceding which are included with the installation of service, Additional Cooperative Acceptance Testing, Automatic Scheduled Testing, Cooperative Scheduled Testing, Manual Scheduled Non-Scheduled Testing will be provided as set forth in Section E13. (T)

E6.2.3 BellSouth SWA FGC (T)

A. Description

1. ***BellSouth SWA*** FGC is provided at all Company end office switches on a direct trunk basis or via Company designated access tandem switches. ***BellSouth SWA*** FGC switching is provided to the IC (i.e., providers of MTS and WATS) at an end office switch unless ***BellSouth SWA FGD*** end office switching is provided in the same office. When ***BellSouth SWA*** FGD switching is available, ***BellSouth SWA*** FGC switching will not be provided. (T)
2. ***BellSouth SWA*** FGC is provided as trunk side switching through the use of end office or access tandem switch trunk equipment. The switch trunk equipment is provided with answer and disconnect supervisory signaling. Wink start start-pulsing signals are provided in all offices where available. In those offices where wink start start-pulsing signals are not available, delay dial start-pulsing signals will be provided unless immediate dial pulse signaling is provided, in which case no start-pulsing signals are provided. (T)
3. ***BellSouth SWA*** FGC is provided with multifrequency address signaling except in certain electromechanical end office switches where multifrequency signaling is not available. In such switches, the address signaling will be dial pulse, revertive pulse or immediate dial pulse signaling, whichever is available. Up to twelve digits of the called party number dialed by the IC's customer using dual tone multifrequency or dial pulse address signals will be provided by Company equipment to the IC terminal location where the ***BellSouth SWA*** service terminates. Such called party number signals will be subject to the ordinary transmission capabilities of the ***BellSouth SWA*** Transport provided. (T)
4. No access code is required for ***BellSouth SWA*** FGC Switching. The telephone number dialed by the IC's customer shall be a 7 or 10 digit number for calls in the North American Numbering Plan (NANP). The form of the numbers dialed by the IC's customers is NXX-XXXX, 0 or 1 + NXX-XXXX, NPA + NXX-XXXX, 0 or 1 + NPA + NXX-XXXX. (T)

E6. BELLSOUTH SWA SERVICE

E6.2 Provision and Description of BellSouth SWA Service Arrangements (Cont'd)

E6.2.3 BellSouth SWA FGC (Cont'd)

A. Description (Cont'd)

5. BellSouth SWA FGC switching, when used in the terminating direction, may be used to access valid NXX's in the LATA, time or weather announcment services of the Company, community information services of an information services provider, and other IC's services (by dialing the appropriate codes) when the services can be reached using valid NXX codes. When directly routed to an end office, only those valid NXX codes served by that office may be accessed. When routed through an access tandem, only those valid NXX codes served by offices subtending the access tandem may be accessed. When measurement capabilities exist, the IC will also be billed additional non-access charges for calls to certain community information services, for which rates are applicable under the Company's General Subscriber Service Tariff. Additionally, non-access charges will also be billed for calls from a BellSouth SWA FGC trunk to another IC's service in accordance with that IC's applicable service rates when the Company performs the billing function for that IC. Calls in the terminating direction will not be completed to 950-0XXX or 950-1XXX access codes, local operator assistance (O- and O+), Directory Assistance (411 where available and 555-1212), service codes (611 and 911 where available) 101XXXX access codes. BellSouth SWA FGC may not be switched, in the terminating direction, to BellSouth SWA FGB, BellSouth SWA FGC, BellSouth SWA FGD or BellSouth SWA TSBSA. (C)

E6. BELLSOUTH SWA SERVICE (T)

E6.2 Provision and Description of BellSouth SWA Service Arrangements (Cont'd) (T)

E6.2.3 BellSouth SWA FGC (Cont'd) (T)

A. Description (Cont'd)

6. The Company will establish a trunk group or groups for the IC at end office switches or access tandem switches where ***BellSouth SWA*** FGC switching is provided. When required for technical limitations, a separate trunk group will be established for each type of ***BellSouth SWA*** FGC switching arrangement provided. Different types of ***BellSouth SWA*** FGC or other switching arrangements may be combined in a single trunk group at the option of the Company. (T)

B. Optional Features

1. Common Switching Optional Features
   a. Automatic Number Identification (ANI)
   b. Service Class Routing
   c. Dial Pulse Address Signaling
   d. Revertive Pulse Address Signaling
   e. Delay Dial Start-Pulsing Signaling
   f. Immediate Dial Pulse Address Signaling
   g. Alternate Traffic Routing
   h. Trunk Access Limitation
2. Common Switching Optional Features for use with Dedicated Access Line Service
   a. End Office End User Line Service Screening for use with Dedicated Access Line Service
   b. Hunt Group Arrangement for use with Dedicated Access Line Service
   c. Nonhunting Number for use with Hunt Group Arrangement or UCD Arrangement for use with Dedicated Access Line Service
   d. Uniform Call Distribution Arrangement for use with Dedicated Access Line Service
   e. Band Advance Arrangement for use with Dedicated Access Line Service
3. ***BellSouth SWA*** Transport Termination Optional Features (T)
   a. Operator Trunks - i.e., Coin, Non-Coin and Combined Coin and Non-Coin. (Non-Coin Trunks are provided at Company electronic and electromechanical end offices. Coin and Combined Coin and Non-Coin are provided only at Company electronic end offices and other Company end offices where equipment is available.)
4. ***BellSouth SWA*** Transport Optional Features (T)
   a. Supervisory Signaling

C. Transmission Specifications

1. ***BellSouth SWA*** FGC is provided with either Type B or Type C Transmission Specifications as follows: (T)
   a. When routed directly to the end office either Type B or Type C is provided.
   b. When routed to an access tandem only Type B is provided.
   c. Type B or Type C is provided on the transmission path from the access tandem to the end office.

E6. BELLSOUTH SWA SERVICE

E6.2 Provision and Description of BellSouth SWA Service Arrangements (Cont'd)

E6.2.3 BellSouth SWA FGC (Cont'd)

C. Transmission Specifications (Cont'd)

2. Type C Transmission Specifications are provided with Interface Group 1 when routed directly to an end office. Type B is provided with Interface Groups 2, 6 or 9, whether routed directly to an end office or to an access tandem.

3. Type DB Data Transmission Parameters are provided with BellSouth SWA FGC for the transmission path between the IC's terminal location and the end office when directly routed to the end office, and Type DB Data Transmission Parameters are provided for the transmission path between the IC's terminal location and the access tandem and between the access tandem and the end office when routed via an access tandem.

D. Testing Capabilities

BellSouth SWA FGC is provided, in the terminating direction where equipment is available with seven digit access to balance (100 type) test line, milliwatt (102 type) test line, nonsynchronous or synchronous test line, automatic transmission measuring (105 type) test line, data transmission (107 type) test line, loop around test line, short circuit test line and open circuit test line. In addition to the tests described in E6.1.6 preceding which are included with the installation of service, Additional Cooperative Acceptance Testing, Non-Optional Automatic Scheduled Testing, Cooperative Scheduled Testing or Manual Scheduled Testing and Non-Scheduled Testing will be provided as set forth in Section E13. following for BellSouth SWA FGC.

E6.2.4 BellSouth SWA FGD

A. Description

1. BellSouth SWA FGD is provided at Company-designated electronic end office switches whether routed directly or via Company-designated electronic access tandem switches. For originating BellSouth SWA FGD with coin sent-paid capability, the coin capable option is provided directly to Company-designated end offices or TOPS tandems. ***In addition, calls originated by an end user to information services, transportation information or Telecommunications Relay Service Centers (TRS) via 211, 511 or 711 dialing codes shall be routed by the Company to the designated DMS access tandem within the LATA.*** (C)

For BellSouth SWA FGD with BellSouth SWA CCSAC and the tandem signaling option, the BellSouth SWA CCSAC option is provided through Company-designated STPs.

2. BellSouth SWA FGD is provided as trunk side switching through the use of end office or access tandem switch trunk equipment. The switch trunk equipment is provided with wink start start-pulsing signals and answer and disconnect supervisory signaling, or without signaling when the BellSouth SWA CCSAC optional feature is specified.

3. BellSouth SWA FGD switching is provided with multifrequency address signaling , or common channel signaling. Up to twelve digits of the called party number dialed by the IC's customer using dual tone multifrequency or dial pulse address , or common channel (out-of-band), signals will be provided by Company equipment to the IC terminal location where the BellSouth SWA service terminates. Such address signals will be subject to the ordinary transmission capabilities of the BellSouth SWA Transport provided.

E6. BELLSOUTH SWA SERVICE

E6.2 Provision and Description of BellSouth SWA Service Arrangements (Cont'd)

E6.2.4 BellSouth SWA FGD (Cont'd)

A. Description (Cont'd)

4. BellSouth SWA FGD switching, when used in the terminating direction, may be used to access valid NXXs in the LATA, time or weather announcement services of the Company, community information services of an information service provider and other IC's services (by dialing the appropriate codes) when such services can be reached using valid NXX codes. When directly routed to an end office, only those valid NXX codes served by that office may be accessed. When routed through an access tandem, only those valid NXX codes served by end offices subtending the access tandem may be accessed. The IC will also be billed additional non-access charges for calls to certain community information services, for which rates are applicable under the Company's General Subscriber Service Tariff. Additionally, non-access charges will also be billed for calls from an BellSouth SWA FGD trunk to another IC's service in accordance with that IC's applicable service rates when the Company performs the billing function for the IC. Calls in the terminating direction will not be completed to 950-0XXX or 950-1XXX access codes, local operator assistance (0- and 0+), Directory Assistance (411 where available and 555-1212), service codes 611 and 911 where available and 101XXXX access codes. BellSouth SWA FGD may not be switched, in the terminating direction, to BellSouth SWA FGB, BellSouth SWA FGC, BellSouth SWA FGD or BellSouth SWA TSBSA. (C)

E6. BELLSOUTH SWA SERVICE

E6.2 Provision and Description of BellSouth SWA Service Arrangements (Cont'd)

E6.2.4 BellSouth SWA FGD (Cont'd)

A. Description (Cont'd)

5. The Company will establish a trunk group or groups for the IC at end office switches or access /TOPS tandem switches where BellSouth SWA FGD switching is provided and where technically feasible. When required by technical limitations, a separate trunk group will be established for each type of BellSouth SWA FGD switching arrangement provided. Different types of BellSouth SWA FGD or other switching arrangements may be combined in a single trunk group at the option of the Company.

6. The access code for BellSouth SWA FGD switching is a uniform access code of the form 101XXXX. These uniform access codes will be the assigned number of all BellSouth SWA FGD access provided to the IC by the Company. As an option, where technically feasible, BellSouth SWA FGD may be accessed by dialing an associated uniform 950-XXXX access code. No access code is required for calls to an IC over BellSouth SWA FGD service if the end user's telephone exchange service is arranged for subscription to that IC as set forth in Section E13. ***of this Tariff***. (T)

   Where no access code is required, the number dialed by the IC's end user shall be a seven or ten digit number for calls in the North American Numbering Plan (NANP). The form of the numbers dialed by the IC's customers is NXX-XXXX, 0 or 1 + NXX-XXXX, NPA + NXX-XXXX, 0 or 1 + NPA + NXX-XXXX.

   Where facilities permit, the IC's operator can be reached by dialing 00.

   When the 101XXXX access code is used, BellSouth SWA FGD switching also provides for dialing the digit 0 for access to the IC's operator, 911 for access to the Company's emergency reporting service, or the end-of-dialing digit (#) for cut-through access to the IC's terminal location.

7. BellSouth SWA FGD Switching will be arranged to accept calls from telephone exchange service locations without the need for dialing 101XXXX uniform access code. Each telephone exchange service line will be marked with a subscription code to identify which 101XXXX code its calls will be directed to for interLATA service and intraLATA service. Subscription codes are applied as set forth in Section E13. ***of this Tariff***. (T)

8. When an IC has had BellSouth SWA FGB access in an end office and subsequently replaces the BellSouth SWA FGB access with BellSouth SWA FGD access, at the mutual agreement of the IC and the Company, the Company will, for a limited period of time, direct calls dialed by the IC's end users using the IC's previous BellSouth SWA FGB access code to the IC's BellSouth SWA FGD service. The IC must be prepared to handle normally dialed BellSouth SWA FGD calls as well as calls dialed with the BellSouth SWA FGB access code which require the IC to receive additional address signaling from the end user. Such calls will be rated as BellSouth SWA FGD.

9. For BellSouth SWA FGD service provided to a Mobile Telephone Switching Office (MTSO) interconnected to a Company access tandem office, the IC will be billed for the Switched Local Channel and BellSouth SWA ***Dedicated*** Transport measured as set forth in E6.7.13 following at premium rates only including the Access Tandem Switching charge and the Interconnection charge. Carrier Common Line and Local Switching charges will not apply. (C)

10. Originating BellSouth SWA FGD service can be ordered for the completion of sent-paid coin calls. BellSouth SWA FGD with coin sent-paid capability is provided directly to designated Company end offices or via TOPS tandem switches.

E6. BELLSOUTH SWA SERVICE (T)

E6.2 Provision and Description of BellSouth SWA Service Arrangements (Cont'd) (T)

E6.2.4 BellSouth SWA FGD (Cont'd) (T)

B. Optional Features

1. Common Switching Optional Features
   a. Automatic Number Identification (ANI) /Charge Number (CN)
   b. Service Class Routing
   c. Alternate Traffic Routing
   d. Call Gapping Arrangements
   e. Trunk Access Limitation
   f. Cut-Through
   g. AccuPulse® service Switching Capability
   h. Calling Party Number (CPN)
   i. Carrier Selection Parameter (CSP)
   j. Access Transport Parameter
   k. 950-XXXX Dialing Over ***BellSouth SWA*** FGD (T)
2. Common Switching Optional Features for use with Dedicated Access Line Service
   a. End Office End User Line Service Screening for use with Dedicated Access Line Service
   b. Hunt Group Arrangement for use with Dedicated Access Line Service
   c. Nonhunting Number for use with Hunt Group Arrangement or Uniform Call Distribution (UCD) Arrangement for use with Dedicated Access Line Service
   d. Band Advance Arrangement for use with Dedicated Access Line Service
3. Switched Termination Optional Features
   a. Operator Trunk, Full Feature Arrangement

®Registered Service Mark of BellSouth Corporation

E6. BELLSOUTH SWA SERVICE (T)

E6.2 Provision and Description of BellSouth SWA Service Arrangements (Cont'd) (T)

E6.2.4 BellSouth SWA FGD (Cont'd) (T)

B. Optional Features (Cont'd)

4. ***BellSouth SWA*** Transport Optional Features (T)
   a. Supervisory Signaling
   b. AccuPulse® service Access Capability
   c. Coin Sent-Paid Capability, as set forth in E6.1.3.A. preceding
   d. ***BellSouth SWA*** CCSAC (T)
   e. 64 Clear Channel Capability (CCC) as set forth in E6.1.3.A.

C. Transmission Specifications

1. ***BellSouth SWA*** FGD is provided with either Type A, Type B or Type C Transmission Specifications as follows: (T)
   a. When routed directly to the end office either Type B or Type C is provided.
   b. When routed to an access or TOPS tandem, only Type A is provided.
   c. Type A is provided on the transmission path from the access or TOPS tandem to the end office.
2. Type C Transmission Specifications are provided with Interface Group 1. Type A and Type B Transmission Performances are provided with Interface Groups 2, 6 or 9.
3. Type DA Data Transmission Parameters are provided for the transmission path between the IC's terminal location and the access or TOPS tandem and between the access or TOPS tandem and the end office, or with ***BellSouth SWA*** FGD, when equipped with tandem signaling, for the transmission path between the customer's premises and the end offices when directly routed to the end offices. Type DB Data Transmission Parameters are provided with ***BellSouth SWA*** FGD for the transmission path between the IC's terminal location and the end office when directly routed to the end office. (T)
4. When equipped with tandem signaling, only Type A is provided.

D. Testing Capabilities

BellSouth SWA FGD is provided, in the terminating direction where equipment is available, with seven digit access to balance (100 type) test line, milliwatt (102 type) test line, nonsynchronous or synchronous test line, automatic transmission measuring (105 type) test line, data transmisson (107 type) test line, loop around test line, short circuit test line and open circuit test line. In addition to the tests described in E6.1.6 preceding which are included with the installation of service, Additional Cooperative Acceptance Testing, Automatice Scheduled Testing, Cooperative Scheduled Testing, Cooperative Scheduled Testing, Manual Scheduled Testing and Non-Scheduled Testing, will be provided for ***BellSouth SWA*** FGD as set forth in Section E13. following. (T)

E6.2.5 BellSouth SWA 8XX Toll Free Dialing Ten Digit Screening Service (T)

A. Service Description

1. Originating ***BellSouth SWA 8XX Toll Free Dialing*** Ten Digit Screening Service is a trunk side switched service that is available to the IC via ***BellSouth SWA 8XX Toll Free Dialing Ten Digit Screening*** Service trunk groups. ***BellSouth SWA 8XX Toll Free Dialing Ten Digit Screening*** Service trunk groups, from the Company's SSP equipped end office or access tandem to the IC, will be provided in conjunction with ***BellSouth SWA*** FGD or ***BellSouth SWA*** TSBSA 3 service. (T)
2. ***BellSouth SWA 8XX Toll Free Dialing*** Ten Digit Screening Service provides for routing 800 originating calls based on the dialed ten digit 800 number. (T)

®Registered Service Mark of BellSouth Corporation

E6. BELLSOUTH SWA SERVICE (T)

E6.2 Provision and Description of BellSouth SWA Service Arrangements (Cont'd) (T)

E6.2.5 BellSouth SWA 8XX Toll Free Dialing Ten Digit Screening Service (Cont'd) (T)

A. Service Description (Cont'd)

3. When a 1+800+NXX-XXXX call is originated by an end user, the Company will use the dialed digits to determine the IC location to which the call is to be routed. If the call originates from an end office switch not equipped to provide the IC identification function, the call will be routed to an office at which the function is available. Once IC identification has been established, the call will be routed to the IC.

B. Provision of Service

1. The manner in which ***BellSouth SWA 8XX Toll Free Dialing*** Ten Digit Screening Service is provided is dependent on the status of the end office from which the service is provided as outlined following. (T)

   a. When an 800 call originates at an end office equipped with equal access and Service Switching Point (SSP) IC identification capabilities, ***BellSouth SWA 8XX Toll Free Dialing*** Ten Digit Screening Service will be provisioned in accordance with the technical characteristics available with ***BellSouth SWA FGD*** or ***BellSouth SWA*** TSBSA 3 service. (T)

   b. When an 800 call originates at an end office equipped with equal access capabilities only (i.e., without SSP IC identification capabilities), the 800 call will be delivered to the access tandem on which the end office is homed and which is equipped with the SSP feature for IC identification. ***BellSouth SWA 8XX Toll Free Dialing*** Ten Digit Screening Service will be provisioned in accordance with the technical characteristics available with ***BellSouth SWA*** FGD or ***BellSouth SWA*** TSBSA 3 service. (T)

   c. When an 800 call originates at an end office not equipped with equal access signaling and that end office's normal call recording function is performed at the access tandem on which the end office is homed and that access tandem is also equipped with the SSP feature for IC identification, the 800 call will be delivered to the access tandem for call routing and IC identification. ***BellSouth SWA 8XX Toll Free Dialing*** Ten Digit Screening Service will be provided in conjunction with ***BellSouth SWA*** FGD or ***BellSouth SWA*** TSBSA 3 service from the SSP equipped access tandem to the IC. (T)

   d. When an 800 call originates at an end office not equipped with equal access signaling and that end office's normal call recording function is performed at a location other than an access tandem equipped with the SSP feature for IC identification, the 800 call will be delivered to a SSP equipped access tandem. ***BellSouth SWA 8XX Toll Free Dialing*** Ten Digit Screening Service will be provided in conjunction with ***BellSouth SWA*** FGD or ***BellSouth SWA*** TSBSA 3 service from the SSP equipped access tandem to the IC except when more than one access tandem is employed in the transport of an ***BellSouth SWA 8XX Toll Free Dialing*** Ten Digit Screening Service call for which standard transmission characteristics are not guaranteed. (T)

E6. BELLSOUTH SWA SERVICE (T)

E6.2 Provision and Description of BellSouth SWA Service Arrangements (Cont'd) (T)

E6.2.5 BellSouth SWA 8XX Toll Free Dialing Ten Digit Screening Service (Cont'd) (T)

B. Provision of Service (Cont'd)

1. (Cont'd)

   Additionally, ***BellSouth SWA 8XX Toll Free Dialing*** Ten Digit Screening Service usage measurement shall be in accordance with the regulations set forth in E6.7 following for ***BellSouth SWA FGC***, ***BellSouth SWA FGD*** and ***BellSouth SWA*** TSBSA 2 and ***BellSouth SWA TSBSA*** 3 service. Specifically, for usage originating from end offices not equipped with equal access capabilities, access minutes shall be measured in the same manner in which ***BellSouth SWA FGC*** and ***BellSouth SWA*** TSBSA 2 access minutes are measured. For usage originating from end offices equipped with equal access capabilities, access minutes shall be measured in the same manner in which ***BellSouth SWA FGD*** and ***BellSouth SWA*** TSBSA 3 access minutes are measured. (T)

2. The IC has the option of having the dialed 800 number (i.e., 800+NXX+XXXX) or the ten digit POTS number (i.e., NPA+NXX+XXXX) delivered. If the IC desires to have the POTS number delivered, the customer must order 800 to POTS number delivery as set forth in E13.3.12 following.

3. ***BellSouth SWA 8XX Toll Free Dialing*** Ten Digit Screening Service will be provisioned in conjunction with ***BellSouth SWA*** FGD and ***BellSouth SWA*** TSBSA 3 service with two exceptions (i.e., design blocking criteria and ANI information digits). (T)

   a. Design blocking criteria is dependent on the status of the end office from which the service is provided (i.e., equipped with equal access capabilities or not equipped with equal access capabilities). The design blocking criteria for ***BellSouth SWA 8XX Toll Free Dialing*** Ten Digit Screening Service is set forth in E6.5.7.A.4. following. (T)

   b. Unless prohibited by technical limitations of the IC's terminating switch (e.g., different dialing plans or restrictions in the ability to identify various combinations of ANI information, i.e., three digit versus ten digit ANI on certain calls), the IC's ***BellSouth SWA 8XX Toll Free Dialing*** Ten Digit Screening Service traffic may, at the option of the IC, be combined in the same trunk group arrangement with the IC's non-***BellSouth SWA 8XX Toll Free Dialing*** Ten Digit Screening Service traffic. When required by technical limitations, or at the request of the IC, a separate trunk group will be established for ***BellSouth SWA 8XX Toll Free Dialing*** Ten Digit Screening Service. 0+ and 0- calling arrangements are not available with ***BellSouth SWA 8XX Toll Free Dialing*** Ten Digit Screening Service. (T)

      BellSouth SWA 8XX Toll Free Dialing Ten Digit Screening Service originating from equal access end offices and equal access tandems equipped with the SSP feature for IC identification will be provided using ***BellSouth SWA FGD*** or ***BellSouth SWA*** TSBSA 3 signaling without overlap outpulsing. ***BellSouth SWA FGD*** and ***BellSouth SWA*** TSBSA 3 signaling may be provided either with or without three digit or ten digit ANI. ***BellSouth SWA 8XX Toll Free Dialing*** Ten Digit Screening Service originating from SSP equipped end offices not having equal access capabilities will be provided to the IC in a ***BellSouth SWA*** FGD/***BellSouth SWA*** TSBSA 3 signaling format without overlap outpulsing.

      Additionally, ANI information digits which identify the call as an 800 call are also provided when the IC orders the ANI and POTS delivery optional features. The provision of these information digits is described in E6.3.1.A.4. and E6.3.3.A.11. following. (T)

4. For ***BellSouth SWA 8XX Toll Free Dialing*** Ten Digit Screening Service traffic originating from equal access end offices without the IC identification function, ***BellSouth SWA*** FGD and ***BellSouth SWA*** TSBSA 3 service parameters as specified in E6.2.4 preceding and E6.2.9 following apply. (T)

5. Premises interface codes as set forth in E6.1.3 preceding for ***BellSouth SWA*** FGD and ***BellSouth SWA*** TSBSA 3 also apply to ***BellSouth SWA 8XX Toll Free Dialing*** Ten Digit Screening Service.

E6.2.6 Reserved for Future Use

E6. BELLSOUTH SWA SERVICE (T)

E6.2 Provision and Description of BellSouth SWA Service Arrangements (Cont'd) (T)

E6.2.7 BellSouth SWA 900 Service (T)

Originating ***BellSouth SWA*** 900 service is a Trunk Side Switched Service that is available to the IC via ***BellSouth SWA*** 900 service Trunk Groups. ***BellSouth SWA*** 900 service Trunk Groups will be provided in conjunction with ***BellSouth SWA*** FGC, ***BellSouth SWA*** FGD, ***BellSouth SWA*** TSBSA 2 or ***BellSouth SWA TSBSA*** 3 or in accordance with the technical characteristics of ***BellSouth SWA*** FGC, ***BellSouth SWA*** FGD, ***BellSouth SWA*** TSBSA 2 or ***BellSouth SWA TSBSA*** 3. (T)

When a 1+900+NXX+XXXX call is originated by an end user, the Company will perform the IC identification function to determine the IC location to which the call is to be routed. The IC identification function will be available at suitably equipped end offices or access tandem switches. If a call originates from an end office switch not equipped to provide the IC identification function, the call will be routed to an access tandem, where the IC identification will be performed and the call routed to the IC based on the NXX.

E6. BELLSOUTH SWA SERVICE

E6.2 Provision and Description of BellSouth SWA Service Arrangements (Cont'd)

E6.2.7 BellSouth SWA 900 Service (Cont'd)

The manner in which BellSouth SWA 900 service is provided depends on the status of the end office from which the service is provided (i.e., equipped with equal access capabilities or not equipped with equal access capabilities). When BellSouth SWA 900 service is provided from an end office equipped with equal access capabilities, all such service will be provisioned in accordance with the technical characteristics available with BellSouth SWA FGD and BellSouth SWA TSBSA 3, except when more than one access tandem is employed in the transport of a BellSouth SWA 900 service call for which standard transmission characteristics are not guaranteed. When BellSouth SWA 900 service is provided from an end office not equipped with equal access capabilities, all such service will be provisioned in accordance with the technical characteristics available with BellSouth SWA FGC, BellSouth SWA FGD, BellSouth SWA TSBSA 2 and BellSouth SWA TSBSA 3 except when more than one tandem is employed in the transport of a BellSouth SWA 900 service call for which standard transmission characteristics are not guaranteed.

Additionally, BellSouth SWA 900 service usage measurement shall be in accordance with the regulations set forth in E6.7.8 following for BellSouth SWA FGC, BellSouth SWA FGD, BellSouth SWA TSBSA 2 and BellSouth SWA TSBSA 3. Specifically, for usage originating from end offices not equipped with equal access capabilities, access minutes shall be measured in the same manner in which BellSouth SWA FGC and BellSouth SWA TSBSA 2 access minutes are measured. For usage originating from end offices equipped with equal access capabilities, access minutes shall be measured in the same manner in which BellSouth SWA FGD and BellSouth SWA TSBSA 3 access minutes are measured.

Unless prohibited by technical limitations of the IC's terminating switch (e.g., different dialing plans), the IC's BellSouth SWA 900 service traffic may, at the option of the IC, be combined in the same trunk group arrangement with the IC's non-BellSouth SWA 900 service traffic. When required by technical limitations, or at the request of the IC, a separate trunk group will be established for BellSouth SWA 900 service. BellSouth SWA 900 service calls originated as 0+, 0-, and 101XXXX, originated using calling cards, and originated from Inmate Service, hotel/motel, coin sent-paid capability and toll restricted stations will be blocked. (C)

BellSouth SWA 900 service originating from equal access end offices with the IC identification function will be provided using BellSouth SWA FGD and BellSouth SWA TSBSA 3 signaling with overlap outpulsing. BellSouth SWA FGD and BellSouth SWA TSBSA 3 signaling may be provided with or without 10-digit ANI, but not in the same trunk group. BellSouth SWA 900 service originating from equal access end offices without the IC identification function, or from end offices not having equal access capability, will be provided using traditional signaling.

For BellSouth SWA 900 service traffic originating from an equal access end office with the IC identification function, BellSouth SWA FGD and BellSouth SWA TSBSA 3 parameters as specified in E6.2.4 and E6.2.9 apply. For BellSouth SWA 900 service traffic originating from all other end offices, BellSouth SWA FGC and BellSouth SWA TSBSA 2 parameters, as specified in E6.2.3 and E6.2.9 apply.

Premises Interface Codes as set forth in E6.1.3 preceding for BellSouth SWA FGD and BellSouth SWA TSBSA 3 also apply to BellSouth SWA 900 service.

The Company retains the right to administer its network in such a manner that the impact of traffic surges due to the peaked nature of BellSouth SWA 900 service traffic on other access service traffic is minimized. Section E6.3.1.A.15 notwithstanding, the Company may, when it deems necessary, implement network management controls to insure acceptable service levels.

In order to ensure deployment of adequate protective network controls, the Company requires that the IC provide notification to the Company's Network Management Center at least two business days before any BellSouth SWA 900 service event for which a substantial call volume is expected during a short period of time (e.g., media stimulated event). Notification should include the nature, time, duration and frequency of the event, an estimated call volume, and the 900 line number to be used.

E6. BELLSOUTH SWA SERVICE (T)

E6.2 Provision and Description of BellSouth SWA Service Arrangements (Cont'd) (T)

E6.2.7 BellSouth SWA 900 Service (Cont'd) (T)

The IC is responsible for using ***BellSouth SWA*** 900 service in accordance with this Tariff. ***BellSouth SWA*** 900 service shall not be used for any communication which is prohibited by law, nor in any manner which is unlawful. It is not intended that ***BellSouth SWA*** 900 service be used for any communication which implicitly or explicitly invites, describes, stimulates, arouses, or otherwise refers to sexual conduct, or which contains sexual innuendoes which arouse or attempt to arouse sexual desire. Nor is it intended that ***BellSouth SWA*** 900 service be used or administered in conjunction with misleading, exploitative or similarly abusive business practices. The IC shall cooperate with the Company to resolve complaints which may result from such uses of ***BellSouth SWA*** 900 service. (T)

E6.2.8 BellSouth SWA LSBSA (T)

The ***BellSouth SWA*** LSBSA service category is virtually identical to that of ***BellSouth SWA FGA***. ***BellSouth SWA*** LSBSA differs from ***BellSouth SWA*** FGA in three respects: the manner in which existing Local Switching Common Switching Optional Features are offered, the offering of new Basic Service Elements, and the resulting rate structure. (T)

BellSouth SWA LSBSA is an unbundled service category. Unbundling separates certain existing common switching optional features from the ***BellSouth SWA*** Basic Serving Arrangement. The resulting service category (i.e., ***BellSouth SWA FG*** less certain existing optional features) is ***BellSouth SWA*** LSBSA. These separated (unbundled) optional features, called Basic Service Elements (BSEs), are individually priced. Additionally, new BSEs are being offered to ***BellSouth SWA*** LSBSA customers. These individually priced BSEs are listed in E6.2.8.B.2. and E6.2.8.B.3. and can only be purchased in addition to service category ***BellSouth SWA*** LSBSA (Except that in E6.2.8.B.3. which can be purchased by ***BellSouth SWA*** TSBSA customers). (T)

A. Description

1. ***BellSouth SWA*** LSBSA is provided in connection with Company electronic and electromechanical end offices. At the option of the IC, ***BellSouth SWA*** LSBSA is provided on a single or multiple line group basis and is arranged for originating calling only, terminating calling only, or two-way calling. ***BellSouth SWA*** LSBSA is arranged for use by the IC in the provision of its FX/ONAL service or MTS/WATS type service. (T)

2. ***BellSouth SWA*** LSBSA provides a line side termination at the first point of switching. The line side termination will be provided with either ground start supervisory signaling or loop start supervisory signaling. The type of signaling is at the option of the IC. (T)

3. The Company shall select the first point of switching, within the selected LATA, at which the line side termination is to be provided unless the IC requests a different first point of switching and Company facilities and measurement capabilities are available to accommodate such a request. When measurement capability does not exist in an office in the LATA, the Company shall select the first point of switching and the assumed minutes of use as described in E6.7.8 following.

4. A seven digit local telephone number assigned by the Company is provided for access to ***BellSouth SWA*** LSBSA switching in the originating direction. The seven digit local telephone number will be associated with the selected end office switch and is of the form NXX-XXXX. (T)

   If the IC requests a specific seven digit telephone number that is not currently assigned, and the Company can, with reasonable effort, comply with that request, the requested number will be assigned to the IC.

5. ***BellSouth SWA*** LSBSA switching, when used in the terminating direction is arranged with dial tone start-dial signaling. When used in the terminating direction ***BellSouth SWA*** LSBSA switching may, at the option of the IC, be arranged for dial pulse or dual tone multifrequency address signaling, subject to availability of equipment at the first point of switching. When ***BellSouth SWA*** LSBSA switching is provided in a hunt group or uniform call distribution arrangement, all ***BellSouth SWA*** LSBSA switching will be arranged for the same type of address signaling. (T)

E6. BELLSOUTH SWA SERVICE (T)

E6.2 Provision and Description of BellSouth SWA Service Arrangements (Cont'd) (T)

E6.2.8 BellSouth SWA LSBSA (Cont'd) (T)

A. Description (Cont'd)

6. No address signaling is provided by the Company when ***BellSouth SWA*** LSBSA switching is used in the originating direction. Address signaling in such cases, if required by the IC, must be provided by the IC's end user using inband tone signaling techniques. Such inband tone address signals will not be regenerated by the Company and will be subject to the ordinary transmission capabilities of the ***BellSouth SWA*** Transport provided. (T)

7. ***BellSouth SWA*** LSBSA FX/ONAL switching, when used in the terminating direction, may be used to access valid NXXs in the local calling area of the dial tone office, ***BellSouth SWA*** LSBSA switching in providing MTS/WATS like service, when used in the terminating direction, may be used to access valid NXXs in the LATA, local operator service (O- and O+) Directory Assistance (411 where available and 555-1212), emergency reporting service (911 where available), exchange telephone repair (611 where available), time or weather announcement services of the Company, community information services of an information service provider, and other IC's services (by dialing the appropriate digits). Charges for ***BellSouth SWA*** LSBSA terminating calls requiring operator assistance on calls to 611 or 911 will only apply wheresufficient call details are available. Additional non-access charges will also be billed on a separate account for (1) an operator surcharge, as set forth in the local exchange tariffs, for local operator assistance (0- and 0+) calls; (2) calls to certain community information services, for which rates are applicable under the Company's General Subscriber Service Tariff; and (3) calls from a ***BellSouth SWA FGA*** line to another IC's service in accordance with that IC's applicable service rates when the Company performs the billing for that IC. For calls to Directory Assistance (411 where available and 555-1212), ***BellSouth SWA*** Usage rates for ***BellSouth SWA*** LSBSA service will not apply. Instead, the charges in the Company's General Subscriber Service Tariff for Directory Assistance will apply. (T)

8. When a ***BellSouth SWA*** LSBSA switching arrangement for an individual IC (a single line or entire hunt group) is discontinued at an end office, an intercept announcement is provided. This arrangement provides, for a limited period of time, an announcement that the service associated with the number dialed has been disconnected. (T)

B. Optional Features and Basic Service Elements

1. Common Switching Optional Features
   a. Call Denial
   b. Service Code Denial
   c. Call Screening
2. Common Switching Basic Service Elements
   a. Hunt Group Arrangement
   b. Uniform Call Distribution Arrangement
   c. Nonhunting Number for use with Hunt Group Arrangement or Uniform Call Distribution Arrangement
   d. Simplified Message Desk Interface (SMDI)
   e. Surrogate Client Numbers
   f. Bulk Calling Line Information Delivery (BCLID)
   g. Queuing
   h. User Transfer

E6. BELLSOUTH SWA SERVICE

E6.2 Provision and Description of BellSouth SWA Service Arrangements (Cont'd)

E6.2.8 BellSouth SWA LSBSA (Cont'd)

B. Optional Features and Basic Service Elements (Cont'd)

2. Common Switching Basic Service Elements (Cont'd)
   - i. Make Busy/Night Transfer
   - j. Direct Inward Dialing (DID) or DID/Direct Outward Dialing (DOD) Access Service with BellSouth SWA LSBSA
   - k. Answer Supervision
   - l. BellSouth® Remote Access Service (N)
3. Common Switching BSEs for use with Dedicated Access Lines
   - a. DID or DID/DOD with BellSouth SWA Basic Serving Arrangements for use with Dedicated Access Lines
4. BellSouth SWA Transport Termination Optional Features
   - a. Two-way operation with dial pulse address signaling and loop start supervisory signaling
   - b. Two-way operation with dial pulse address signaling and ground start supervisory signaling
   - c. Two-way operation with dual tone multifrequency address signaling and loop start supervisory signaling
   - d. Two-way operation with dual tone multifrequency address signaling and ground start supervisory signaling
   - e. Terminating operation with dial pulse address signaling and loop start supervisory signaling
   - f. Terminating operation with dial pulse address signaling and ground start supervisory signaling
   - g. Terminating operation with dual tone multifrequency address signaling and loop start supervisory signaling
   - h. Terminating operation with dual tone multifrequency address signaling and ground start supervisory signaling
   - i. Originating operation with loop start supervisory signaling
   - j. Originating operation with ground start supervisory signaling
5. BellSouth SWA Transport Optional Features
   - a. Supervisory Signaling
   - b. IC Specified Entry Switch Receive Level
6. Certain other features which may be available in connection with BellSouth SWA LSBSA are provided under the Company's General Subscriber Service Tariff. Examples are:
   - a. Custom Calling Features
   - b. IntraLATA extensions

C. Transmission Specifications

BellSouth SWA LSBSA is provided with either Type B or Type C Transmission specifications. The specifications for the associated parameters are guaranteed to the first point of switching. Type C Transmission specifications are provided with Interface Group 1 and Type B is provided with Interface Group 2, 6 or 9. Type DB Data Transmission Parameters are provided with BellSouth SWA LSBSA to the first point of switching.

® BellSouth is a registered trademark of BellSouth Intellectual Property Corporation

E6. BELLSOUTH SWA SERVICE (T)

E6.2 Provision and Description of BellSouth SWA Service Arrangements (Cont'd) (T)

E6.2.8 BellSouth SWA LSBSA (Cont'd) (T)

D. Testing Capabilities

BellSouth SWA LSBSA is provided, in the terminating direction where equipment is available, with seven digit access to balance (100 type) test line and milliwatt (102 type) test line. In addition to the tests described in E6.1.6 preceding which are included with the installation of service, Additional Cooperative Acceptance Testing and Non-Scheduled Testing will be provided as set forth in Section E13. of this Tariff. (T)

E6.2.9 BellSouth SWA TSBSA (T)

The ***BellSouth SWA*** TSBSA service category, with ***BellSouth SWA TSBSA*** 1, ***BellSouth SWA TSBSA*** 2, and ***BellSouth SWA TSBSA*** 3, is virtually identical to ***BellSouth SWA FGB***, ***BellSouth SWA FGC***, and ***BellSouth SWA FGD***, respectively. ***BellSouth SWA*** TSBSA differs from the trunk side feature groups in two respects: the manner in which existing Local Switching Common Switching Optional Features are offered, and the resulting rate structure. (T)

BellSouth SWA TSBSA is an unbundled service category. Unbundling separates certain existing common switching optional features from the feature group service categories. The resulting serving category (i.e., ***BellSouth SWA FG,*** less certain existing optional features) is ***BellSouth SWA*** TSBSA. These separated (unbundled) optional features, called BSEs, are individually priced and can only be purchased in addition to service category ***BellSouth SWA*** TSBSA. One existing optional feature, Automatic Number Identification (ANI)/Charge Number, has become an unbundled BSE. (T)

A. ***BellSouth SWA*** TSBSA 1 (T)

1. Description

   a. ***BellSouth SWA*** TSBSA 1, when directly routed to an end office is provided at appropriately equipped Company electronic end office switches. When provided via Company designated electronic access tandem switches, ***BellSouth SWA*** TSBSA 1 Switching is provided at Company electronic and electromechanical end office switches. (T)

   b. ***BellSouth SWA*** TSBSA 1 is provided as trunk side switching through the use of end office or access tandem switch trunk equipment. The switch trunk equipment is provided with wink start start-pulsing signals and answer and disconnect supervisory signaling. (T)

   c. ***BellSouth SWA*** TSBSA 1 switching is provided with multifrequency address signaling in both the originating and terminating directions. Except for ***BellSouth SWA*** TSBSA 1 switching provided with the automatic number identification (ANI) or rotary dial station signaling arrangements as set forth in E6.3, any other address signaling in the originating direction, if required by the IC, must be provided by the IC's customer using inband tone signaling techniques. Such inband tone address signals will not be regenerated by the Company and will be subject to the ordinary transmission capabilities of the Switched Transport provided. (T)

   d. The access code for ***BellSouth SWA*** TSBSA 1 switching is a uniform access code. The form of the uniform access code is 950-0XXX or 950-1XXX for carriers. One uniform access code will be assigned to the IC for its domestic communications. This uniform access code will be the assigned access number of all ***BellSouth SWA*** TSBSA 1 service provided to the IC by the Company. As an option, where technically feasible, ***BellSouth SWA*** TSBSA 3 may be accessed by dialing an associated uniform 950-XXXX access code. When used with the 950 dialing option, ***BellSouth SWA*** TSBSA 3 is only available with common channel signaling. (T)

E6. BELLSOUTH SWA SERVICE

E6.2 Provision and Description of BellSouth SWA Service Arrangements (Cont'd)

E6.2.9 BellSouth SWA TSBSA (Cont'd)

A. BellSouth SWA TSBSA 1 (Cont'd)

1. Description (Cont'd)

   e. BellSouth SWA TSBSA 1 switching, when used in the terminating direction, may be used to access valid NXXs in the LATA, time or weather announcement services of the Company, community information services of an information service provider and other IC's services (by dialing the appropriate digits). When directly routed to an end office, only those valid NXX codes served by that end office may be accessed. When routed through an access tandem, only those valid NXX codes served by end offices subtending the access tandem may be accessed. The IC will also be billed additional non-access charges for calls to certain community information services for which rates are applicable under the Company's General Subscriber Service Tariff. Additionally, non-access charges will also be billed for calls from a BellSouth SWA TSBSA 1 trunk to another IC's service in accordance with that IC's applicable service rates when the Company performs the billing function for that IC. Calls in the terminating direction will not be provided to 950-0XXX or 950-1XXX access codes, local operator assistance (0- and 0+), Directory Assistance (411 where available and 555-1212), service codes (611 and 911 where available) or 101XXXX access codes. BellSouth SWA TSBSA 1 may not be switched, in the terminating direction, to BellSouth SWA FGB, BellSouth SWA FGC, BellSouth SWA FGD or BellSouth SWA TSBSA.

   f. The Company will establish a trunk group or groups for the IC at end office switches or access tandem switches where BellSouth SWA TSBSA 1 switching is provided. When required by technical limitations, a separate trunk group will be established for each type of BellSouth SWA TSBSA 1 switching arrangement provided. Different types of BellSouth SWA TSBSA 1 or other switching arrangements may be combined in a single trunk group at the option of the Company.

   g. When all BellSouth SWA TSBSA 1 switching arrangements are discontinued at an end office and/or in a LATA, an intercept announcement is provided. This arrangement provides, for a limited period of time, an announcement that the service associated with the number dialed has been disconnected.

   h. For BellSouth SWA TSBSA 1 service provided to a Mobile Telephone Switching Office (MTSO) directly interconnected to a Company access tandem office, the IC will be billed for Switched Local Channel and BellSouth SWA ***Dedicated*** Transport measured as set forth in E6.7.13 following at premium rates only including the Access Tandem Switching charge and the Interconnection Charge. Carrier Common Line and Local Switching charges will not apply. (C)

2. Optional Features and Basic Service Elements

   a. Common Switching Optional Features

      - Up to 7 Digit Outpulsing of Access Digits to IC

      - Alternate Traffic Routing

   b. Common Switching Basic Service Elements

      - Automatic Number Identification (ANI)

   c. Common Switching BSEs for Use with Dedicated Access Lines

      - DID or DID/DOD with BSAs Access Service for use with Dedicated Access Lines

   d. BellSouth SWA Transport Termination Optional Features

      - Rotary Dial Station Signaling

E6. BELLSOUTH SWA SERVICE (T)

E6.2 Provision and Description of BellSouth SWA Service Arrangements (Cont'd) (T)

E6.2.9 BellSouth SWA TSBSA (Cont'd) (T)

A. ***BellSouth SWA*** TSBSA 1 (Cont'd) (T)

2. Optional Features and Basic Service Elements (Cont'd)

e. ***BellSouth SWA*** Transport Optional Features (T)

- IC Specified Entry Switch Receive Level
- Supervisory Signaling
- IC Specification of ***BellSouth SWA*** Transport Termination (T)

3. Transmission Specifications

BellSouth SWA TSBSA 1 is provided with either Type B or Type C Transmission Specifications. The specificatons for the associated parameters are guaranteed to the end office when routed directly or to the first point of switching when routed via an access tandem. Type C Transmission Specifications are provided with Interface Group 1, and Type B is provided with Interface Groups 2, 6 or 9. Type DB Data Transmission parameters are provided with ***BellSouth SWA*** TSBSA 1 to the first point of switching. (T)

4. Testing Capabilities

BellSouth SWA TSBSA 1 is provided, in the terminating direction where equipment is available, with seven digit access to balance (100 type) test line, milliwatt (102 type) test line, nonsynchronous or synchronous test line, automatic transmission measuring (105 type) test line, data transmission (107 type) test line, loop around test line, short circuit test line and open circuit test line. In addition to the tests described in E6.1.6 preceding which are included with the installation of service, Additional Cooperative Acceptance Testing, Automatic Scheduled Testing, Cooperative Scheduled Testing, Manual Scheduled Non-Scheduled Testing will be provided as set forth in Section E13. of this Tariff. (T)

B. ***BellSouth SWA*** TSBSA 2 (T)

1. Description

a. ***BellSouth SWA*** TSBSA 2 is provided at all Company end office switches on a direct trunk basis or via Company designated access tandem switches. ***BellSouth SWA*** TSBSA 2 switching is provided to the IC (i.e., providers of MTS and WATS) at an end office switch unless ***BellSouth SWA*** TSBSA 3 end office switching is provided in the same office. When ***BellSouth SWA*** TSBSA 3 switching is available, ***BellSouth SWA*** TSBSA 2 switching will not be provided. (T)

b. ***BellSouth SWA*** TSBSA 2 is provided as trunk side switching through the use of end office or access tandem switch trunk equipment. The switch trunk equipment is provided with answer and disconnect supervisory signaling. Wink start start-pulsing signals are provided in all offices where available. In those offices where wink start start-pulsing signals are not available, delay dial start-pulsing signals will be provided unless immediate dial pulse signaling is provided, in which case no start-pulsing signals are provided. (T)

E6. BELLSOUTH SWA SERVICE

E6.2 Provision and Description of BellSouth SWA Service Arrangements (Cont'd)

E6.2.9 BellSouth SWA TSBSA (Cont'd)

B. BellSouth SWA TSBSA 2 (Cont'd)

1. Description (Cont'd)

   c. BellSouth SWA TSBSA 2 is provided with multifrequency address signaling except in certain electromechanical end office switches where multifrequency signaling is not available. In such switches, the address signaling will be dial pulse, revertive pulse or immediate dial pulse signaling, whichever is available. Up to twelve digits of the called party number dialed by the IC's customer using dual tone multifrequency or dial pulse address signals will be provided by Company equipment to the IC terminal location where the BellSouth SWA service terminates. Such called party number signals will be subject to the ordinary transmission capabilities of the BellSouth SWA Transport provided.

   d. No access code is required for BellSouth SWA TSBSA 2 switching. The telephone number dialed by the IC's customer shall be a seven or ten digit number for calls in the North American Numbering Plan (NANP). The form of the numbers dialed by the IC's customers is NXX-XXXX, 0 or 1 + NXX-XXXX, NPA + NXX-XXXX, 0 or 1 + NPA + NXX-XXXX.

   e. BellSouth SWA TSBSA 2 switching, when used in the terminating direction, may be used to access valid NXX's in the LATA, time or weather announcment services of the Company, community information services of an information services provider, and other IC's services (by dialing the appropriate codes) when the services can be reached using valid NXX codes. When directly routed to an end office, only those valid NXX codes served by that office may be accessed. When routed through an access tandem, only those valid NXX codes served by offices subtending the access tandem may be accessed. When measurement capabilities exist, the IC will also be billed additional non-access charges for calls to certain community information services, for which rates are applicable under the Company's General Subscriber Service Tariff. Additionally, non-access charges will also be billed for calls from a BellSouth SWA TSBSA 2 trunk to another IC's service in accordance with that IC's applicable service rates when the Company performs the billing function for that IC. Calls in the terminating direction will not be completed to 950-0XXX or 950-1XXX access codes, local operator assistance (O- and O+), Directory Assistance (411 where available and 555-1212), service codes (611 and 911 where available) 101XXXX access codes. BellSouth SWA TSBSA 2 may not be switched, in the terminating direction, to BellSouth SWA FGB, BellSouth SWA FGC, BellSouth SWA FGD, or BellSouth SWA TSBSA. (C)

   f. The Company will establish a trunk group or groups for the IC at end office switches or access tandem switches where BellSouth SWA TSBSA 2 switching is provided. When required for technical limitations, a separate trunk group will be established for each type of BellSouth SWA TSBSA 2 switching arrangement provided. Different types of BellSouth SWA TSBSA 2 or other switching arrangements may be combined in a single trunk group at the option of the Company.

2. Optional Features and Basic Service Elements

   a. Common Switching Optional Features

      - Service Class Routing
      - Dial Pulse Address Signaling
      - Revertive Pulse Address Signaling
      - Delay Dial Start-Pulsing Signaling
      - Immediate Dial Pulse, Address Signaling

E6. BELLSOUTH SWA SERVICE (T)

E6.2 Provision and Description of BellSouth SWA Service Arrangements (Cont'd) (T)

E6.2.9 BellSouth SWA TSBSA (Cont'd) (T)

B. ***BellSouth SWA*** TSBSA 2 (Cont'd) (T)

2. Optional Features and Basic Service Elements (Cont'd)

a. Common Switching Optional Features (Cont'd)

- Alternate Traffic Routing
- Trunk Access Limitation

b. Common Switching Basic Service Elements

- Automatic Number Identification (ANI)

c. Common Switching Optional Features for use with Dedicated Access Line Service

- End Office End User Line Service Screening for use with Dedicated Access Line Service
- Hunt Group Arrangement for use with Dedicated Access Line Service
- Nonhunting Number for use with Hunt Group Arrangement or UCD Arrangement for use with Dedicated Access Line Service
- Uniform Call Distribution Arrangement for use with Dedicated Access Line Service
- Band Advance Arrangement for use with Dedicated Access Line Service

d. Common Switching BSEs for use with Dedicated Access Line Service

- DID or DID/DOD with ***BellSouth SWA Basic Serving Arrangements*** for use with Dedicated Access Line (T)

e. ***BellSouth SWA*** Transport Termination Optional Features (T)

- Operator Trunks - i.e., Coin, Non-Coin and Combined Coin and Non-Coin. (Non-Coin Trunks are provided at Company electronic and electromechanical end offices. Coin and Combined Coin and Non-Coin are provided only at Company electronic end offices and other Company end offices where equipment is available.)

f. ***BellSouth SWA*** Transport Optional Features (T)

- Supervisory Signaling

3. Transmission Specifications

a. ***BellSouth SWA*** TSBSA 2 is provided with either Type B or Type C Transmission specifications as follows: (T)

- When routed directly to the end office either Type B or Type C is provided.
- When routed to an access tandem only Type B is provided.
- Type B or Type C is provided on the transmission path from the access tandem to the end office.

b. Type C Transmission specifications are provided with Interface Group 1 when routed directly to an end office. Type B is provided with Interface Groups 2, 6 or 9, whether routed directly to an end office or to an access tandem.

c. Type DB Data Transmission Parameters are provided with ***BellSouth SWA*** TSBSA 2 for the transmission path between the IC's terminal location and the end office when directly routed to the end office, and Type DB Data Transmission Parameters are provided for the transmission path between the IC's terminal location and the access tandem and between the access tandem and the end office when routed via an access tandem. (T)

E6. BELLSOUTH SWA SERVICE

E6.2 Provision and Description of BellSouth SWA Service Arrangements (Cont'd)

E6.2.9 BellSouth SWA TSBSA (Cont'd)

B. BellSouth SWA TSBSA 2 (Cont'd)

4. Testing Capabilities

BellSouth SWA TSBSA 2 is provided, in the terminating direction where equipment is available with seven digit access to balance (100 type) test line, milliwatt (102 type) test line, nonsynchronous or synchronous test line, automatic transmission measuring (105 type) test line, data transmission (107 type) test line, loop around test line, short circuit test line and open circuit test line. In addition to the tests described in E6.1.6 preceding which are included with the installation of service, Additional Cooperative Acceptance Testing, Non-Optional Automatic Scheduled Testing, Cooperative Scheduled Testing, or Manual Scheduled Testing and Non-Scheduled Testing will be provided as set forth in Section E13. following for BellSouth SWA TSBSA 2.

C. BellSouth SWA TSBSA 3

1. Description

a. BellSouth SWA TSBSA 3 is provided at Company-designated electronic end office switches whether routed directly or via Company-designated electronic access tandem switches. For BellSouth SWA TSBSA 3 originating with coin sent-paid capability, the coin capable option is provided directly to Company-designated end offices or TOPS tandems. ***In addition, calls originated by an end user to information services, transportation information or Telecommunications Relay Service Centers (TRS) via 211, 511 or 711 dialing codes shall be routed by the Company to the designated DMS access tandem within the LATA.*** (C)

For BellSouth SWA TSBSA 3 with BellSouth SWA CCSAC, the BellSouth SWA CCSAC option is provided through Company-designated STPs.

b. BellSouth SWA TSBSA 3 is provided as trunk side switching through the use of end office or access tandem switch trunk equipment. The switch trunk equipment is provided with wink start start-pulsing signals and answer and disconnect supervisory signaling, or without signaling when the BellSouth SWA CCSAC optional feature is specified.

c. BellSouth SWA TSBSA 3 switching is provided with multifrequency address signaling , or common channel signaling. Up to twelve digits of the called party number dialed by the IC's customer using dual tone multifrequency or dial pulse address, or common channel (out-of-band), signals will be provided by Company equipment to the IC terminal location where the BellSouth SWA service terminates. Such address signals will be subject to the ordinary transmission capabilities of the BellSouth SWA Transport provided.

d. BellSouth SWA TSBSA 3 switching, when used in the terminating direction, may be used to access valid NXXs in the LATA, time or weather announcement services of the Company, community information services of an information service provider and other IC's services (by dialing the appropriate codes) when such services can be reached using valid NXX codes. When directly routed to an end office, only those valid NXX codes served by that office may be accessed. When routed through an access tandem, only those valid NXX codes served by end offices subtending the access tandem may be accessed. The IC will also be billed additional non-access charges for calls to certain community information services, for which rates are applicable under the Company's General Subscriber Service Tariff. Additionally, non-accesscharges will also be billed for calls from an BellSouth SWA TSBSA 3 trunk to another IC's service in accordance with that IC's applicable service rates when the Company performs the billing function for the IC. Calls in the terminating direction will not be completed to 950-0XXX or 950-1XXX access codes, local operator assistance (0- and 0+), Directory Assistance (411 where available and 555-1212), service codes 611 and 911 where available and 101XXXX access codes. BellSouth SWA TSBSA 3 may not be switched, in the terminating direction, to BellSouth SWA FGB, BellSouth SWA FGC, BellSouth SWA FGD or BellSouth SWA TSBSA.

E6. BELLSOUTH SWA SERVICE

E6.2 Provision and Description of BellSouth SWA Service Arrangements (Cont'd)

E6.2.9 BellSouth SWA TSBSA (Cont'd)

C. BellSouth SWA TSBSA 3 (Cont'd)

1. Description (Cont'd)

e. The Company will establish a trunk group or groups for the IC at end office switches or access /TOPS tandem switches where BellSouth SWA TSBSA 3 switching is provided and where technically feasible. When required by technical limitations, a separate trunk group will be established for each type of BellSouth SWA TSBSA 3 switching arrangement provided. Different types of BellSouth SWA TSBSA 3 or other switching arrangements may be combined in a single trunk group at the option of the Company.

f. The access code for BellSouth SWA TSBSA 3 switching is a uniform access code of the form ***101XXXX***. These uniform access codes will be the assigned number of all BellSouth SWA TSBSA 3 access provided to the IC by the Company. No access code is required for calls to an IC over BellSouth SWA TSBSA 3 service if the end user's telephone exchange service is arranged for subscription to that IC as set forth in Section E13. of this Tariff. (C)

Where no access code is required, the number dialed by the IC's end user shall be a seven or ten digit number for calls in the North American Numbering Plan (NANP). The form of the numbers dialed by the IC's customers is NXX-XXXX, 0 or 1 + NXX-XXXX, NPA + NXX-XXXX, 0 or 1 + NPA + NXX-XXXX.

Where facilities permit, the IC's operator can be reached by dialing 00.

When the 101XXXX access code is used, BellSouth SWA TSBSA 3 switching also provides for dialing the digit 0 for access to the IC's operator, 911 for access to the Company's emergency reporting service, or the end-of-dialing digit (#) for cut-through access to the IC's terminal location. (C)

g. BellSouth SWA TSBSA 3 switching will be arranged to accept calls from telephone exchange service locations without the need for dialing 101XXXX uniform access code. Each telephone exchange service line will be marked with a subscription code to identify which 101XXXX code its calls will be directed to for interLATA service and intraLATA service. Subscription codes are applied as set forth in E13. following. (C)

h. When an IC has had BellSouth SWA TSBSA 1 access in an end office and subsequently replaces the BellSouth SWA TSBSA 1 access with BellSouth SWA TSBSA 3 access, at the mutual agreement of the IC and the Company, the Company will, for a limited period of time, direct calls dialed by the IC's end users using the IC's previous BellSouth SWA TSBSA 1 access code to the IC's BellSouth SWA TSBSA 3 service. The IC must be prepared to handle normally dialed BellSouth SWA TSBSA 3 calls as well as calls dialed with the BellSouth SWA TSBSA 1 access code which require the IC to receive additional address signaling from the end user. Such calls will be rated as BellSouth SWA TSBSA 3.

E6. BELLSOUTH SWA SERVICE

E6.2 Provision and Description of BellSouth SWA Service Arrangements (Cont'd)

E6.2.9 BellSouth SWA TSBSA (Cont'd)

C. BellSouth SWA TSBSA 3 (Cont'd)

1. Description (Cont'd)

   i. For BellSouth SWA TSBSA 3 service provided to a Mobile Telephone Switching Office (MTSO) interconnected to a Company access tandem office, the IC will be billed for the Switched Local Channel and BellSouth SWA ***Dedicated*** Transport measured as set forth in E6.7.13 following, at premium rates only, including the Access Tandem Switching charge and the Interconnection charge. Carrier Common Line and Local Switching charges will not apply. (C)

   j. Originating BellSouth SWA TSBSA 3 service can be ordered for the completion of sent-paid coin calls. BellSouth SWA TSBSA 3 with coin sent-paid capability is provided directly to designated Company end offices or via TOPS tandem switches.

2. Optional Features and Basic Service Elements

   a. Common Switching Optional Features

      - Service Class Routing
      - Alternate Traffic Routing
      - Call Gapping Arrangement
      - Trunk Access Limitation
      - Cut-Through
      - AccuPulse® service Switching Capabilities
      - Calling Party Number (CPN)
      - Carrier Selection Parameter (CSP)
      - Access Transport Parameter
      - 950-XXXX Dialing Over BellSouth SWA TSBSA 3

   b. Common Switching Basic Service Elements

      - Automatic Number Identification (ANI)/Charge Number (CN)

   c. Common Switching Optional Features for use with Dedicated Access Line Service

      - End Office End User Line Service Screening for use with Dedicated Access Line Service
      - Hunt Group Arrangement for use with Dedicated Access Line Service
      - Nonhunting Number for use with Hunt Group Arrangement or Uniform Call Distribution (UCD) Arrangement for use with Dedicated Access Line Service
      - Band Advance Arrangement for use with Dedicated Access Line Service

   d. Common Switching BSEs for use with Dedicated Access Line Service

      - DID or DID/DOD with BellSouth SWA Basic Serving Arrangements service for use with Dedicated Access Line

   e. BellSouth SWA Transport Termination Optional Features

      - Operator Trunk, Full Feature Arrangement

® Registered Service Mark of BellSouth Intellectual Property Corporation

E6. BELLSOUTH SWA SERVICE (T)

E6.2 Provision and Description of BellSouth SWA Service Arrangements (Cont'd) (T)

E6.2.9 BellSouth SWA TSBSA (Cont'd) (T)

C. ***BellSouth SWA*** TSBSA 3 (Cont'd) (T)

2. Optional Features and Basic Service Elements (Cont'd)

   f. ***BellSouth SWA*** Transport Optional Features (T)

   - Supervisory Signaling
   - AccuPulse® service Access Capability
   - Coin Sent-Paid Capability, as set forth in E6.1.3.A. preceding
   - ***BellSouth SWA*** CCSAC (T)
   - 64 Clear Channel Capability (CCC) as set forth in E6.1.3.A.

3. Transmission Specifications

   a. ***BellSouth SWA*** TSBSA 3 is provided with either Type A, Type B or Type C Transmission Specifications as follows: (T)

   - When routed directly to the end office either Type B or Type C is provided.
   - When routed to an access or TOPS tandem, only Type A is provided.
   - Type A is provided on the transmission path from the access or TOPS tandem to the end office.

   b. Type C Transmission Specifications are provided with Interface Group 1. Type A and Type B Transmission Performances are provided with Interface Groups 2, 6 or 9.

   c. Type DA Data Transmission Parameters are provided for the transmission path between the IC terminal location and the access or TOPS tandem and between the access or TOPS tandem and the end office. Type DB Data Transmission Parameters are provided with ***BellSouth SWA*** TSBSA 3 for the transmission path between the IC terminal location and the end office when directly routed to the end office. (T)

4. Testing Capabilities

   BellSouth SWA TSBSA 3 terminating direction where equipment is available, with seven digit access to balance (100 type) test line, milliwatt (102 type) test line, nonsynchronous or synchronous test line, automatic transmission measuring (105 type) test line, data transmisson (107 type) test line, loop around test line, short circuit test line and open circuit test line. In addition to the tests described in E6.1.6 preceding which are included with the installation of service, Additional Cooperative Acceptance Testing, Automatice Scheduled Testing, Cooperative Scheduled Testing, Cooperative Scheduled Testing, Manual Scheduled Testing and Non-Scheduled Testing, will be provided for ***BellSouth SWA*** TSBSA 3 as set forth in Section E13. of this Tariff. (T)

E6.2.10 BellSouth SWA 500 Service (T)

A. ***BellSouth SWA*** 500 service is an originating Trunk Side ***BellSouth SWA*** service. ***BellSouth SWA*** 500 service will be provided in conjunction with ***BellSouth SWA*** FGC, ***BellSouth SWA*** FGD, ***BellSouth SWA*** TSBSA 2 or ***BellSouth SWA TSBSA*** 3 or in accordance with the technical characteristics of ***BellSouth SWA*** FGC, ***BellSouth SWA*** FGD, ***BellSouth SWA*** TSBSA 2 or ***BellSouth SWA TSBSA*** 3. (T)

B. ***BellSouth SWA*** 500 service is available with 1+ only, 0+ only, or 1+ and 0+ dialing capability, with 1+ and 0+ the standard. If 1+ only or 0+ only dialing capability is requested, service rearrangement charges as specified in E6.8.8 following are applicable for 500 traffic terminating to existing trunk groups. (T)

®Registered Service Mark of BellSouth Corporation

E6. BELLSOUTH SWA SERVICE (T)

E6.2 Provision and Description of BellSouth SWA Service Arrangements (Cont'd) (T)

E6.2.10 BellSouth SWA 500 Service (Cont'd) (T)

C. When a 1+ or 0+500+NXX+XXXX call is originated by an end user, the Company will perform the IC identification function, based on the first six digits of the dialed 500 Number to determine the IC location to which the call is to be routed. After the IC identification function is performed, the call will be routed to the IC over originating ***BellSouth SWA*** FGC, ***BellSouth SWA*** FGD, ***BellSouth SWA*** TSBSA 2 or ***BellSouth SWA TSBSA*** 3 or in accordance with the technical characteristics of ***BellSouth SWA*** FGC, ***BellSouth SWA*** FGD, ***BellSouth SWA*** TSBSA 2 or ***BellSouth SWA TSBSA*** 3. (T)

D. The manner in which ***BellSouth SWA*** 500 service is provided is dependent on the status of the end office from which the service is provided as outlined following: (T)

1. When a 500 call originates from an end office equipped with equal access and Service Switching Point (SSP) IC identification capabilities, ***BellSouth SWA*** 500 service will be provisioned in accordance with the technical characteristics available with ***BellSouth SWA*** FGD or ***BellSouth SWA*** TSBSA 3 via a database look-up at the SCP. (T)
2. When a 500 call originates from an end office equipped with equal access capability only (i.e., without SSP IC identification capabilities), the end office will perform the IC identification function via NXX translations. The 500 traffic is then delivered to the IC via ***BellSouth SWA*** FGD or ***BellSouth SWA*** TSBSA 3. (T)
3. When a 500 call originates from an end office not equipped with equal access signaling, and that end office's normal call recording function is performed at the tandem on which the end office is homed, and that tandem is also equipped with the capability to perform a NXX translation, the 500 call will be delivered to the tandem for call routing and IC identification. The 500 call will be delivered via ***BellSouth SWA*** FGC, ***BellSouth SWA*** FGD, ***BellSouth SWA*** TSBSA 2 or ***BellSouth SWA TSBSA*** 3 or in accordance with the technical characteristics of ***BellSouth SWA*** FGC, ***BellSouth SWA*** FGD, ***BellSouth SWA*** TSBSA 2 or ***BellSouth SWA TSBSA*** 3. (T)
4. When a 500 call originates from an end office not equipped with equal access signaling, and that end office's normal call recording function is performed at a location other than a tandem equipped with the capability to perfrom a NXX translation. Such service will be provided in conjunction with ***BellSouth SWA*** FGD or ***BellSouth SWA TSBSA*** 3 access from the access tandem capable of performing a NXX translation to the IC, except when more than one tandem is employed in the transport of a ***BellSouth SWA*** 500 service call for which standard transmission characteristics are not guaranteed. (T)

E. ***BellSouth SWA*** 500 service will be provisioned in conjunction with ***BellSouth SWA*** FGC, ***BellSouth SWA*** FGD, ***BellSouth SWA*** TSBSA 2 and ***BellSouth SWA TSBSA*** 3 access, with two exceptions (i.e., design blocking criteria and ANI information digits). (T)

F. Design blocking criteria, is dependent on the status of the end office from which the service is provided (i.e., equipped with equal access capabilities or not equipped with equal access capabilities). The design blocking criteria for ***BellSouth SWA*** 500 service is set forth in E6.5.7 following. (T)

G. Unless prohibited by technical limitations of the IC's terminating switch (such as different dialing plans or restrictions in the ability to identify various combinations of ANI information, i.e., 3 digit versus 10 digit ANI on certain calls) the IC's ***BellSouth SWA*** 500 service traffic may, at the option of the IC, be combined in the same trunk group arrangement with the IC's non-***BellSouth SWA*** 500 service traffic. When required by technical limitations, or at the request of the IC, a separate trunk group will be established for ***BellSouth SWA*** 500 service. 0- calling arrangements are not available with ***BellSouth SWA*** 500 service. (T)

H. Additionally, ***BellSouth SWA*** 500 service usage measurement shall be in accordance with the regulations set forth in E6.7.8 following for ***BellSouth SWA FGC***, ***BellSouth SWA FGD***, ***BellSouth SWA*** TSBSA 2 or ***BellSouth SWA TSBSA*** 3. Specifically, for usage originating from end offices not equipped with equal access capabilities, access minutes shall be measured in the same manner in which ***BellSouth SWA FGC*** and ***BellSouth SWA*** TSBSA 2 access minutes are measured. For usage originating from end offices equipped with equal access capabilities, access minutes shall be measured in the same manner in which ***BellSouth SWA FGD*** or ***BellSouth SWA*** TSBSA 3 access minutes are measured. (T)

I. Premise Interface Codes as set forth in E6.1.3.A.6. preceding for ***BellSouth SWA*** FGD and ***BellSouth SWA*** TSBSA 3 also apply to ***BellSouth SWA*** 500 service. (T)

E6. BELLSOUTH SWA SERVICE

E6.2 Provision and Description of BellSouth SWA Service Arrangements (Cont'd)

E6.2.11 BellSouth Dedicated Ring

A. Self-healing Multi-nodal Alternate Route Topology Ring

1. BellSouth Dedicated Ring is a dedicated, high capacity, network designed to provide increased reliability and functionality via a self-healing Ring topology between multiple customer designated locations and Company Central Offices where facilities can be made available as determined by the Company. This network consists of fiber routed through local, alternate central office, internodal and/or interoffice channel facilities that transmit DS1, DS3, STS-1, OC-3, OC-12 and/or ***OC-48*** channel services simultaneously over primary and alternate paths between customer designated locations and Company Central Offices. This Ring topology will continually monitor DS1, DS3, STS-1, OC-3, OC-12 and/or ***OC-48*** service quality, detect any failure within the system, and automatically self-heal around a point of failure to ensure the flow of DS1, DS3, STS-1, OC-3, OC-12 and/or ***OC-48 services*** between locations within the network. (C)

   BellSouth Dedicated Ring is available at OC-1, OC-3, OC-3+ OC-12, OC-48, OC-48+, ***OC-192*** and ***OC-192+*** capacities. (C)

2. OC-1 BellSouth Dedicated Ring is available only in Overlay Ring Arrangements riding the customer's host OC-12, OC-48, or OC-48+ BellSouth Dedicated Ring. The OC-1 BellSouth Dedicated Ring shares the transport of its host BellSouth Dedicated Ring. OC-1 BellSouth Dedicated Ring provides an equivalent capacity of 28 DS1s or one STS-1. When an OC-1 BellSouth Dedicated Ring overlays an OC-12, OC-48, or OC-48+ BellSouth Dedicated Ring, an OC-1 channel interface is required. E6.2.11 BellSouth Dedicated Ring

3. OC-3 BellSouth Dedicated Ring is available as an individual service or in an Overlay Ring Arrangement riding the customer's host OC-12, OC-48, OC-48+, ***OC-192,*** or ***OC-192+*** BellSouth Dedicated Ring. OC-3 BellSouth Dedicated Ring provides an equivalent capacity of 3 DS3s, or any combination thereof not to exceed an OC-3 capacity. (C)

   Channel Interface Capacity Reallocation allows the customer to reallocate STS-1, DS3 and/or DS1 capacities to OC-3 nodes subsequent to the initial configuration of an OC-3 Ring.

4. OC-3+ BellSouth Dedicated Ring is available as an individual service, or in combination with OC-12 BellSouth Dedicated Ring, or in an Overlay Ring Arrangement riding the customer's host OC-48***, OC-48+, OC-192 or OC-192+*** BellSouth Dedicated Ring. OC-3+ BellSouth Dedicated Ring provides an equivalent OC-3 capacity, not to exceed 3 DS3s at each node, with a maximum Ring capacity of 12 DS3s, not to exceed an OC-12 Ring capacity. (C)

   When a customer orders OC-3+ BellSouth Dedicated Ring in combination with OC-12 BellSouth Dedicated Ring, capacity and channel interface availability at each Customer Node and Central Office Node location is determined by the size node ordered by the customer.

5. OC-12 BellSouth Dedicated Ring is available as an individual service, or in combination with OC-3+ BellSouth Dedicated Ring, or in an Overlay Ring Arrangement riding the customer's host OC-48***, O-48+, OC-192 or OC-192+*** BellSouth Dedicated Ring. OC-12 BellSouth Dedicated Ring provides an equivalent capacity of 12 DS3s. (C)

6. OC-48 BellSouth Dedicated Ring is available as an individual service, ***or in an Overlay Ring Arrangement riding the customer's host OC-192 or OC-192+ BellSouth Dedicated Ring,*** or with overlaying rings in capacities of OC-1, OC-3, OC-3+ and/or OC-12. OC-48 BellSouth Dedicated Ring provides an equivalent capacity of 48 DS3s. (C)

7. OC-48+ BellSouth Dedicated Ring is available as an individual bi-directional service, ***or in an Overlay Ring Arrangement riding the customer's host OC-192+ BellSouth Dedicated Ring,*** or with overlaying rings in capacities of OC-1, and/or OC-3. It provides equivalent capacity of 24 DS3s between consecutive node locations on the Ring. The maximum capacity of the OC-48+ BellSouth Dedicated Ring is determined by the number of Customer and Central Office nodes on the Ring. (C)

8. OC-192 BellSouth Dedicated Ring service is available as an individual service, or with overlaying rings in capacities of OC-3, OC-3+, OC-12, OC-48 and/or OC-48+. OC-192 BellSouth Dedicated Ring provides an equivalent capacity of 192 DS3s. (N)

9. OC-192+ BellSouth Dedicated Ring service is available as an individual bi-directional service, or with overlaying rings in capacities of OC-3, OC-3+, OC-12 and/or OC-48. It provides equivalent capacity of 96 DS3s between consecutive node locations on the ring. The maximum capacity of the OC-192+ BellSouth Dedicated Ring service is determined by the number of Customer and Central Office nodes on the ring. (N)

All BellSouth marks contained herein are owned by BellSouth Intellectual Property Corporation

E6. BELLSOUTH SWA SERVICE

E6.2 Provision and Description of BellSouth SWA Service Arrangements (Cont'd)

E6.2.11 BellSouth Dedicated Ring (Cont'd)

A. Self-healing Multi-nodal Alternate Route Topology Ring (Cont'd)

10. BellSouth Dedicated Ring Channel Interfaces are available as follows: (T)

	Nodes								
Channel Interfaces	**OC-1**	**OC-3**	**OC-3+**	**OC-12**	**OC-48**	**OC-48+**	***OC-192***	***OC-192+***	(C)
DS1	Yes	Yes	Yes	No	No[1]	No[1]	***No[1]***	***No[1]***	(C)
DS3	No	Yes	Yes	Yes	Yes	Yes	***Yes[1]***	***Yes[1]***	(C)
STS-1	Yes	Yes	Yes	Yes	Yes	Yes	***Yes[1]***	***Yes[1]***	(C)
OC-1[2]	No	No	No	Yes	Yes	Yes	***Yes[1]***	***Yes[1]***	(C)
OC-3	No	No	No	Yes	Yes	***Yes***	***Yes[1]***	***Yes[1]***	(C)
OC-12	No	No	No	No	Yes	Yes	***Yes[1]***	***Yes[1]***	(C)
OC-48	No	No	No	No	No	No	Yes[1]	Yes[1]	(N)
28 DS1 Channel System (DS3)	No	Yes	Yes	Yes	Yes	Yes	***Yes[1]***	***Yes[1]***	(C)
28 DS1 Channel System (STS-1)	No	Yes	Yes	Yes	Yes	Yes	***Yes[1]***	***Yes[1]***	(C)

11. BellSouth Dedicated Ring Overlay Ring Arrangements are available as follows: (T)

Overlaying BellSouth Dedicated Ring	**Host BellSouth Dedicated Ring**					
	OC-12	**OC-48**	**OC-48+**	***OC-192***	***OC-192+***	(C)
OC-1	X	X	X	***X***	***X***	(C)
OC-3	X	X	X	***X***	***X***	(C)
OC-3+		X	***X***	***X***	***X***	(C)
OC-12		X	***X***	***X***	***X***	(C)
OC-48				X	X	(N)
OC-48+					X	(N)

12. BellSouth Dedicated Ring is connectable at Company Central Offices to any 44.736 Mbps and/or 1.544 Mbps services as provided in Section E6. of this tariff. Rates and charges for such other services are as set forth in the applicable sections of this tariff for such other services. (T)

13. Shared Network Arrangements will not be provided with BellSouth Dedicated Ring at the Ring level. Shared Network Arrangements as defined in E2.6 apply to DS1 channel interfaces only. (T)

14. The customer must provide suitable floor space, controlled environment, and source of non-switched suitable power to support this service. (T)

15. Where the customer provides two separate entrance facility cable routes for BellSouth Dedicated Ring, the primary and alternate entrance facilities will be separate and will enter the customer node over such different routes. When the customer requests a connection at a Customer Node via two local channels and Company facilities do not exist for the second Local Channel, the Company may provide an equivalent second Local Channel via an existing alternate route. When facilities become available for the second Local Channel, the Company may rearrange the alternate route at any time. (T)

16. The compatibility requirements, technical specifications, and generic requirements for BellSouth Dedicated Ring terminated at the customers designated locations are referenced in Technical Reference ANSI T1.404-1994, ANSI T1.403-1989 and ANSI T1.105-1991. (T)

Note 1: DS1 interfaces are available via OC-1, OC-3, and OC-3+ Overlay Ring Arrangements or 28 DS1 Channel Systems only. ***DS3 and STS-1 interfaces and DS3 and STS-1 Channel Systems are available for rings installed on or after November 12, 2003.*** (C)

Note 2: OC-1 interfaces are only available for use with OC-1 Overlay Ring Arrangements.

All BellSouth marks contained herein are owned by BellSouth Intellectual Property Corporation

E6. BELLSOUTH SWA SERVICE

E6.2 Provision and Description of BellSouth SWA Service Arrangements (Cont'd)

E6.2.11 BellSouth Dedicated Ring (Cont'd) (M)

A. Self-healing Multi-nodal Alternate Route Topology Ring (Cont'd) (M)

15. DS3 interface combinations and technical specifications are referenced in Bellcore TR-INS-000342. (M)

16. DS1 interface combinations and technical specifications are referenced in Bellcore TR-NPL-000054. (M)

17. STS-1, OC-1, OC-3, and OC-12 interface combinations and technical specifications are referenced in BellSouth Telecommunications, Inc. Technical Reference TR-73582. (M)

18. These self-healing multi-nodal DS3 high capacity service channels have a long term performance objective of 99.5 percent error-free seconds and a severely errored second (SES) objective of less than 0.009 percent SES when the circuit is available. Self-healing multi-nodal DS1 high capacity service channels have a long term performance objective of 99.95 percent error-free seconds. (M)

19. When the distance between nodes on a BellSouth Dedicated Ring is such that optical signal regeneration is required, then regeneration equipment will be provided at no additional charge to the customer to assure proper operation of the service. In some cases regeneration will be provided via SONET Add/Drop equipment called a Regeneration Node. A Regeneration Node does not contain the capability to add or drop services. Accordingly, FlexServ service (a.k.a. BellSouth SPA Customer Reconfiguration) Customer Network Management may not be ordered with a Regeneration Node, however, a customer may monitor a Regeneration Node via the FlexServ service (a.k.a. BellSouth SPA Customer Reconfiguration) Customer Network Management Surveillance option when a customer has established surveillance for a ring. Regeneration Node Surveillance is provided as a part of the charges associated with the customer's ring level FlexServ service (a.k.a. BellSouth SPA Customer Reconfiguration) Customer Network Management Surveillance. Regeneration Node and Regeneration Node Surveillance, as applicable, will appear on a customer's records as non-rated USOC(s), as follows: (M)

	USOC	
Regeneration Node, all ring capacities, non-rated	**SHSRN**	(M)
Regeneration Node Surveillance, all ring capacities, non-rated	**SHSRS**	(M)

20. Effective February 16, 2007, Shared Node Interconnection is available, based on equipment capability, whereby two BellSouth Dedicated Ring arrangements belonging to the same customer may share a node in a central office that is common to both rings. Shared Node Interconnection capability is available based on equipment capability. With Shared Node Interconnection, one of the rings (i.e., the larger capacity ring) is considered the Primary Ring and the other ring is considered the Secondary Ring. Primary Rings may be an OC-12, OC-48 or an OC-192 ring. A Secondary Ring is always a lower capacity ring than that of the Primary Ring. The various Shared Node Interconnection service arrangements that are available are as follows: (N)

Shared Node Interconnection Primary Ring Capacity	**Shared Node Interconnection Secondary Ring Capacity Available For Use With Primary Rings**				
	OC-3	OC-12	OC-48	OC-48+	(N)
OC-12	X				(N)
OC-48	X	X			(N)
OC-192	X	X	X	X	(N)

With Shared Node Interconnection, the Primary Ring shall have a Central Office Node and the Secondary Ring shall have a Shared Node Interconnection Central Office Node in the central office associated with the ring interconnection. For the Secondary Ring, a Shared Node Interconnection Central Office Node is considered toward meeting the three node minimum requirement for the Secondary Ring. This shared node will utilize capacity of the Primary Ring node, based on the size of the Secondary Ring, and will count toward the capacity the customer has available at the location. Should the customer require more capacity at a shared node central office location than is available on the Primary Ring node, then additional billable service components will be required. (N)

Only one Shared Node Interconnection arrangement is available for an individual Central Office Node on a Primary Ring. (N)

Reconfiguration is not allowed at central office nodes that are configured for Shared Node Interconnection. (N)

Material appearing on this page previously appeared on page(s) 25 of this section.

All BellSouth marks contained herein and as set forth in the trademarks and service marks section of the BellSouth Tariffs are owned by BellSouth Intellectual Property Corporation.

E6. BELLSOUTH SWA SERVICE

E6.2 Provision and Description of BellSouth SWA Service Arrangements (Cont'd)

(M)

E6.2.12 Channels For Use With BellSouth SWA Managed Shared Network Service

A. This tariff section provides for intrastate service components that are for use with a customer's interstate BellSouth SWA Managed Shared Network Service arrangement.

B. BellSouth SWA Managed Shared Network Service is a managed high capacity shared network service that is offered in the BellSouth Telecommunications, Inc. Tariff F.C.C. No. 1. The service is available to customer's that aggregate 28 or greater equivalent DS1s at a location. BellSouth SWA Managed Shared Network Service is a service under which the customer assigns to the Telephone Company the responsibility for facility design and engineering and routing of the dedicated transport for DS1 and DS0 switched access services from serving wire centers in a BellSouth SWA Managed Shared Network Service area to the customer's Aggregation Location(s) in the same BellSouth SWA Managed Shared Network Service area. Each LATA in the Telephone Company's territory is a BellSouth SWA Managed Shared Network Service area.

C. An Aggregation Location is any customer designated premises in a BellSouth SWA Managed Shared Network Service area that aggregates 28 or greater equivalent DS1s which the Telephone Company provides to the customer and which customer designated premises has been designated by the customer as an Aggregation Location for purposes of BellSouth SWA Managed Shared Network Service. In determining the number of DS1 equivalents the customer has at an Aggregation Location, 24 DS0s are considered an equivalent DS1.

D. An Alternate Aggregation Location is a customer location in a BellSouth SWA Managed Shared Network Service area that aggregates dedicated transport for DS1 and DS0 switched access traffic which may be rearranged to an Aggregation Location in the same BellSouth SWA Managed Shared Network Service area.

E. BellSouth SWA Managed Shared Network Service traffic is connectable at serving wire centers to DS1 and DS0 switched access services. Each serving wire center in a BellSouth SWA Managed Shared Network Service area from which switched dedicated transport traffic originates or terminates for delivery to or from an Aggregation Location or Alternate Aggregation Location is an Origination Location.

F. The credit allowance for service interruptions associated with BellSouth SWA Managed Shared Network Service shall be the same as comparable standard BellSouth SWA Service components.

Material previously appearing on this page now appears on page(s) 24.16 of this section.

All BellSouth marks contained herein and as set forth in the trademarks and servicemarks section of this Tariff are owned by BellSouth Intellectual Property Corporation.

E6. BELLSOUTH SWA SERVICE

E6.3 Common Switching and Transport Termination Optional Features

E6.3.1 Common Switching Optional Features (BellSouth SWA FG Customers Only) (M)

A. These optional features are available only to Feature Group ICs (as specified in the description) at no additional charge. However, comparable features, known as BSEs, are offered to BellSouth SWA Basic Serving Arrangement ICs as specified in E6.3.3 following. (M)

1. Hunt Group Arrangement (M)

   This option provides the ability to sequentially access one of two or more line side connections in the originating direction, when the access code of the line group is dialed. BellSouth SWA FGA services with different methods of providing off-hook supervisory signaling (i.e., provided by customer's equipment vs. forwarded by customer's equipment when the called party answers) cannot be mixed in the same hunt group arrangement. The IC will specify the type of multiline hunt group desired. The types of hunt group arrangements are: Regular Hunt, Preferential Hunt, Circular Hunt with Preferential Hunt, and Circular Hunt with Regular Hunt. This arrangement contemplates one access code (i.e., telephone number) per arrangement. This feature, available with BellSouth SWA FGA, is provided from suitably equipped Company offices. MTS/WATS type BellSouth SWA FGA and FX/ONAL BellSouth SWA FGA services cannot be mixed in the same hunt group arrangement.

   The BellSouth SWA FGA dial tone office utilized for a Hunt Group Arrangement must be the same for all BellSouth SWA FGA lines in the arrangement. The IC may specify that the BellSouth SWA FGA lines in the Hunt Group Arrangement be connected to the same IC-designated location for transport to another state. A split arrangement (two or more IC-designated locations) is available only when the IC-designated locations are served from the same serving wire center (i.e., are within the same Local Transport Location). IC service record information needed to add more than one IC-designated location to the arrangement, or to modify the service arrangement after initial establishment, must be obtained from the HGA BellSouth SWA FGA IC. (M)

2. Uniform Call Distribution Arrangement (M)

   This option provides a type of multiline hunting arrangement which provides for an even distribution of calls among the available lines in a hunt group. BellSouth SWA FGA services with different methods of providing off-hook supervisory signaling (i.e., provided by the IC's equipment vs. forwarded by the IC's equipment when the called party answers) cannot be mixed in the same hunt group arrangement. This feature, available with BellSouth SWA FGA, is provided from suitably equipped Company offices. (M)

3. Nonhunting Number for use with Hunt Group or Uniform Call Distribution Arrangement (M)

   This option provides an arrangement for an individual line within a multiline hunt or UCD group that provides access to that line within the hunt or UCD group when it is idle or provides busy tone when it is busy, when the nonhunting number is dialed. This feature, available with BellSouth SWA FGA, is provided from suitably equipped Company offices. (M)

4. Automatic Number Identification (ANI) /Charge Number (CN) (M)

   This option provides the automatic transmission of a three, seven or ten digit number and information digits to the IC terminal location for calls originating in the LATA, to identify the geographical calling area (NPA) or the calling station. ANI will identify the calling station, where possible, or at a minimum, identify the NPA from which the call originated. The three, seven or ten digit numbers will contain the following information: for three digit numbers, NPA only; for seven digit numbers, NXX+XXXX; for ten digit numbers, NPA+NXX+XXXX. With the exception of three digit ANI, the ANI feature is an end office software function which is associated on a call-by-call basis with (1) all individual transmissions paths in a trunk group routed directly between an end office and an IC's terminal location or, where technically feasible, with (2) all individual transmission paths in a trunk group between an end office and an access tandem, and a trunk group between an access tandem and an IC's terminal location. (M)

E6. BELLSOUTH SWA SERVICE

E6.3 Common Switching and Transport Termination Optional Features (Cont'd)

E6.3.1 Common Switching Optional Features (BellSouth SWA FG Customers Only) (Cont'd)

A. (Cont'd)

4. Automatic Number Identification (ANI) /Charge Number (CN) (Cont'd)

Three digit ANI is a software function of the SSP feature which is used in conjunction with BellSouth SWA 8XX Toll Free Dialing Ten Digit Screening Service and occurs whenever the SSP feature detects an BellSouth SWA 8XX Toll Free Dialing Ten Digit Screening Service call that does not include the originating caller's ANI.

Three digit ANI, the originating NPA of the 800 call, is available with BellSouth SWA FGD routed traffic only. Three digit ANI will be transmitted to the IC on all BellSouth SWA 8XX Toll Free Dialing Ten Digit Screening Service calls that are processed by the SSP feature for which a complete ANI is not received from the subtending office that originates the 800 call. This includes, but is not limited to: (1) non equal access end offices which have their call recording function performed at a location other than the office which is performing the BellSouth SWA 8XX Toll Free Dialing Ten Digit Screening Service function, (2) calls from non equal access switches that encounter an ANI failure, and (3) ANI failures from non equal access switches which have their call recording function performed by the office which supports the BellSouth SWA 8XX Toll Free Dialing Ten Digit Screening Service function.

The seven digit ANI telephone number is available with BellSouth SWA FGB and BellSouth SWA FGC. With these BellSouth SWA FGs, technical limitations may exist in Company switching facilities which require ANI to be provided only on a directly trunked basis. ANI will be transmitted on all calls except those originating from multi party lines, pay telephone ***lines*** using BellSouth SWA FGB, or when an ANI failure has occurred. (C)

The ten digit ANI telephone number is only available with BellSouth SWA FGD with multifrequency address signaling. When the BellSouth SWA CCSAC optional feature is specified, the IC may obtain an ANI equivalent by ordering the Charge Number optional feature, as specified following. The ten digit ANI telephone numbers consists of the Numbering Plan Area (NPA) plus the seven digit ANI telephone number. The ten digit ANI telephone number will be transmitted on all calls except those identified as multi-party or ANI failure, in which case only the NPA will be transmitted (in addition to the information digit described as follows.)

Generally, the three digit and ten digit ANI telephone number is available with BellSouth SWA FGD and with BellSouth SWA 8XX Toll Free Dialing Ten Digit Screening Service that uses BellSouth SWA FGD on a per class of service basis. The ten digit ANI number will be transmitted on calls except those where ANI cannot be provided because the conditions set forth following exists or, those from end offices not equipped to provide ANI. In these instances, only the three digit ANI and the information digits described as follows, if applicable, will be transmitted. Additionally, when the IC has ordered the 800 to POTS Number Delivery feature, information digits (i.e., 24) which identify the call as a 800 call will be forwarded to the IC's terminal location in addition to the ten digit POTS number. These information digits will also replace the information digits which identify the conditions set forth following when a POTS number is delivered to the IC's terminal location.

E6. BELLSOUTH SWA SERVICE (T)

E6.3 Common Switching and Transport Termination Optional Features (Cont'd)

E6.3.1 Common Switching Optional Features (BellSouth SWA FG Customers Only) (Cont'd) (T)

A. (Cont'd)

4. Automatic Number Identification (ANI)/Charge Number (CN) (Cont'd)

With ***BellSouth SWA*** FGC, ANI is provided from end offices at which Company recording for end user billing is not provided, or where it is not required, as with ***BellSouth SWA 8XX Toll Free Dialing Ten Digit Screening*** service. It is not provided from end offices for which the Company needs to forward ANI to its recording equipment. (T)

Where ANI cannot be provided, e.g., on calls from 4 and 8 party services, Information digits will be provided to the IC.

The Information digits identify:

Telephone number is the station billing number - no special treatment is required.

Multiparty line-telephone number is a 4 or 8 party line and cannot be identified - number must be obtained via an operator or in some other manner.

ANI failure has occurred in the end office switch which prevents identification of calling telephone number - must be obtained by operator or in some other manner.

Hotel/Motel originated call which requires room number identification.

Coinless station, hospital, inmate, etc., call which requires special screening or handling by the IC, and

Call is an Automatic Identified Outward Dialed (AIOD) call from an end user premises equipment.

The ANI telephone number is the listed telephone number of the end user and is not the telephone number of the calling party. These ANI information digits are available with ***BellSouth SWA FGB***, ***BellSouth SWA FGC***, and ***BellSouth SWA FGD***. (T)

Charge Number (CN) is an ANI equivalent which provides for the automatic transmission of the ten-digit billing number of the calling station and originating line information to the IC's premises for calls originating in the LATA. The specific protocol for CN is contained in the BellSouth Guidelines to Technical Publication TR-TSV-000905. This feature is available only with ***BellSouth SWA FGD*** when ***BellSouth SWA*** CCSAC is specified. (T)

E6.3.2 Common Switching (BellSouth SWA FG and BellSouth SWA Basic Serving Arrangement Customers) (T)

A. These optional features are available to ***BellSouth SWA FG*** and ***BellSouth SWA Basic Serving Arrangement*** customers (as specified in the descriptions) at no additional charge. (T)

1. Call Denial on Line or Hunt Group

This option allows for the screening of terminating calls within the LATA for IC's , and for completion only of calls to 411, 611, 911, 800, 555-1212, and a specified set of NXXs within the local exchange calling area of the dial tone office in which the arrangement is provided. All other "toll" calls are routed to a reorder tone or recorded announcement. This feature is provided in all Company electronic end offices and, where available, in electromechanical end offices. It is available with ***BellSouth SWA FGA*** and ***BellSouth SWA*** LSBSA. (T)

2. Service Code Denial on Line or Hunt Group

This option allows for the screening of terminating calls within the LATA for IC's , and for disallowing completion of calls to 0- and N11 (e.g., 411, 611 and 911). This feature is provided where available in all Company electronic end offices and electromechanical end offices. It is available with ***BellSouth SWA FGA*** and ***BellSouth SWA*** LSBSA. (T)

E6. BELLSOUTH SWA SERVICE

E6.3 Common Switching and Transport Termination Optional Features (Cont'd)

E6.3.2 Common Switching (BellSouth SWA FG and BellSouth SWA Basic Serving Arrangement Customers) (Cont'd)

A. (Cont'd)

3. Up to 7 Digit Outpulsing of Access Digits to IC

   This option provides for the end office capability of providing up to 7 digits of the uniform access code (950- 0XXX or 950-1XXX) to the IC terminal location. The IC can request that only some of the digits in the access code be forwarded. The access code digits would be provided to the IC terminal location using multifrequency signaling, and transmission of the digits would precede the forwarding of ANI if that feature were provided. It is available with BellSouth SWA FGA and BellSouth SWA TSBSA 1.

4. Revertive Pulse Address Signaling

   This option provides for a dc pulsing arrangement that transmits intelligence in the following manner:

   The equipment at the originating location presets itself to represent the number of pulses required and to count the pulses received from the terminating location.

   The equipment at the terminating location transmits a series of pulses by the momentary grounding of its battery supply until the originating location breaks the dc path to indicate that the required number of pulses has been counted.

   This option is available with BellSouth SWA FGC and BellSouth SWA TSBSA 2.

5. Delay Dial Start-Pulsing Signaling

   This option provides a method of indicating to the near end trunk circuit readiness to accept address signaling information by the far end trunk circuit. Delay-dial is often referred to as an off-hook, on-hook signaling sequence. The delay-dial signal is the off-hook interval and the start-pulsing signal is the on-hook interval. With integrity check, the calling office will not outpulse until a delay-dial (off-hook) signal followed by a start-pulsing (on-hook) signal has been recorded at the calling office. This option is available with BellSouth SWA FGC and BellSouth SWA TSBSA 2.

6. Immediate Dial Pulse Address Signaling

   This option provides for the forwarding of dial pulses from the Company end office to the IC without the need of a start-pulsing signal from the IC. It is available with BellSouth SWA FGC and BellSouth SWA TSBSA 2.

7. Dial Pulse Address Signaling

   This trunk side option provides for the transmission of number information, e.g., called number, between the end office switching system and the IC's terminal location (in either direction) by means of direct current pulses. It is available with BellSouth SWA FGC and BellSouth SWA TSBSA 2.

8. Service Class Routing

   This option provides the capability of directing originating traffic from an end office to a trunk group to an IC-designated terminal location, based on the line class of service (e.g., ***pay telephone***, multiparty or hotel/motel) service prefix indicator (e.g., 0-, 0+ or 01+) or service access code (e.g., 500, 600, 700, 800 or 900). It is provided in suitably equipped end office or access /TOPS tandem switches and is available with BellSouth SWA FGC, BellSouth SWA FGD, BellSouth SWA TSBSA 2 and TSBSA 3. (C)

E6. BELLSOUTH SWA SERVICE

E6.3 Common Switching and Transport Termination Optional Features (Cont'd)

E6.3.2 Common Switching (BellSouth SWA FG and BellSouth SWA Basic Serving Arrangement Customers) (Cont'd)

A. (Cont'd)

9. Alternate Traffic Routing

a. Multiple IC Terminal Locations Alternate Routing

This option provides the capability of directing originating traffic from an end office to a trunk group (the "high usage" group) to an IC designated terminal location until that group is fully loaded, and then delivering additional originating traffic (the "overflowing" traffic) from the same end office or access tandem to a different trunk group (the "final" group) to a second IC designated terminal location. The IC shall specify the last trunk CCS desired for the high usage group. It is provided in suitably equipped end office or access tandem switches and is available with BellSouth SWA FGB, BellSouth SWA FGC, BellSouth SWA FGD, and BellSouth SWA TSBSA. Due to technical limitations, this option is not available with the routing of sent-paid coin traffic from line controlled pay stations.

b. End Office Alternate Routing When Ordered in Trunks

This option provides an alternate routing arrangement for ICs to have access for a particular Feature Group to an end office via two routes: one route via an access tandem and one direct route. The feature allows the IC's originating traffic from the end office to be offered first to the direct trunk group and then overflow either to an access tandem group or, where facilities permit to another direct trunk group equipped with tandem signaling. It is provided in suitably equipped end offices and is available with BellSouth SWA FGB, BellSouth SWA FGD, BellSouth SWA TSBSA. This option is available for use in providing BellSouth SWA 500 service, BellSouth SWA 8XX Toll Free Dialing Ten Digit Screening service and BellSouth SWA 900 service only when the end office is equipped to perform the 500, 800, or 900 Access Service IC identification function. Due to technical limitations, this option is not available with the routing of sent-paid coin traffic from line controlled pay stations.

10. Trunk Access Limitation

This option provides for the routing of originating 900 service calls to a specified number of transmission paths in a trunk group, in order to limit (choke) the completion of such traffic to the IC. Calls to the designated service which could not be completed over the subset of transmission paths in the trunk group, i.e., the choked calls, would be routed to reorder tone. It is provided in all Company electronic end offices and where available in electromechanical end offices. It is available with BellSouth SWA FGC, BellSouth SWA FGD, BellSouth SWA TSBSA 2 and TSBSA 3.

11. Call Gapping Arrangement

This option, provided in suitably equipped end office switches, provides for the routing of originating calls to 900 Service to be switched in the end office to all transmission paths in a trunk group at a prescribed rate of flow, e.g., one call every five seconds, in order to limit (choke) the completion of such traffic to the IC. Calls to the designated service which are denied access by this feature, i.e., the choked calls, would be routed to a no circuit announcement. It is provided in selected BellSouth SWA FGD and BellSouth SWA TSBSA 3 equipped end offices and is available only with BellSouth SWA FGD and BellSouth SWA TSBSA 3.

12. Cut-Through

This option allows end users of the IC to reach the IC's terminal location by using the end of dialing digit (#). This option provides for connection of the call to the terminal location of the IC indicated by the ***101XXXX*** code upon receipt of the end of dialing digit (#). The Company will not record any other dialed digits for these calls. This option is available with BellSouth SWA FGD and BellSouth SWA TSBSA 3. (C)

E6. BELLSOUTH SWA SERVICE

E6.3 Common Switching and Transport Termination Optional Features (Cont'd)

E6.3.2 Common Switching (BellSouth SWA FG and BellSouth SWA Basic Serving Arrangement Customers) (Cont'd)

A. (Cont'd)

13. AccuPulse® service Switching Capability

    This option provides for an end office or access tandem capability which allows a connection between the IC's premises and a suitably equipped end user premises utilizing end office or access tandem switching that is capable of transmitting 56 Kbps digital data. It is provided in suitably equipped electronic end offices or access tandems and is available only with BellSouth SWA FGD and BellSouth SWA TSBSA 3.

14. Calling Party Number (CPN)

    This option provides for the automatic transmission of the calling party's ten-digit telephone number to the IC's premises for calls originating in the LATA. The ten-digit telephone number consists of the NPA plus the seven-digit telephone number, which may or may not be the same number as the calling station's charge number. The specific protocol for CPN is contained in the BellSouth Guidelines to Technical Publication TR-TSV-000905. This feature is available only with BellSouth SWA FGD and BellSouth SWA TSBSA 3 when the BellSouth SWA CCSAC option is specified. The IC shall transmit all parameters of the protocol (unaltered), including the privacy indicator when forwarded, to the terminating end.

15. Carrier Selection Parameter (CSP)

    This option provides for the automatic transmission of a signaling indicator which signifies to the IC whether the call being processed originated from a presubscribed end user of that IC. The specific protocol for CSP is contained in the BellSouth Guidelines to Technical Publication TR-TSV-000905. This feature is available only with BellSouth SWA FGD and BellSouth SWA TSBSA 3 when BellSouth SWA CCSAC is provided.

16. Access Transport Parameter (ATP)

    This option provides for the transmission of information from the originating calling location through the BellSouth SWA CCSAC network. Information supplied using ATP may consist of one or more of the following: Called Party Sub-Address; Calling Party Sub-Address; High and Low Layer Compatibility and Compatibility checking by the called party's equipment. The specific protocol for ATP is contained in Technical Publication TR-TSV-000962. This feature is available only with BellSouth SWA FGD or BellSouth SWA TSBSA 3 when 64 CCC is specified from suitably equipped offices.

17. Call Screening

    This option allows for the BellSouth SWA FGA or BellSouth SWA LSBSA service to utilize the 07 ANI ii Digit and to allow completion of 0+, 0-, N11 (e.g., 411, 611, and 911) calls within the Local Calling Area, and 555-1212 calls. Additionally, calls will not be completed to 1+, 101XXXX, 500, 700, ***or*** 900. This feature, available with BellSouth SWA FGA and BellSouth SWA LSBSA, is provided from suitably equipped Company offices. (T)

18. 950 Dialing Over BellSouth SWA FGD and BellSouth SWA TSBSA 3

    This option provides for the origination of traffic over BellSouth SWA FGD and BellSouth SWA TSBSA 3 service utilizing the uniform 950-XXXX access code. The service is available, where technically feasible. This option is only available at the trunk group level.

®Registered Service Mark of BellSouth Intellectual Property Corporation

E6. BELLSOUTH SWA SERVICE

E6.3 Common Switching and Transport Termination Optional Features (Cont'd)

E6.3.3 Basic Service Elements (BellSouth SWA Basic Serving Arrangement Customers Only)

A. These BSEs are available to BellSouth SWA Basic Serving Arrangement customers only (as specified in the descriptions). As unbundled BSEs their charges are detailed in E6.8.3. The following table relates the Company BSE name to that listed in the ONA Services User Guide.

BellSouth Name	ONA Services User Guide
Hunt Group Arrangement	Multiline Hunt Group (MLHG)
Uniform Call Distribution (UCD)	No Generic Name
Nonhunting Number for use with Hunt Group or UCD Arrangement	Multiline Hunt Group Access to Each Port
Simplified Message Desk Interface (SMDI)	Message Desk (SMDI)
Surrogate Client Number (SCN)	No Generic Name
Bulk Calling Line Information Delivery (BCLID)	Calling Directory Number Delivery - via BCLID
Queuing	Multiline Hunt Group UCD with Queuing
User Transfer	Three Way Call Transfer
Make Busy/Night Transfer	Make Busy Key
Direct Inward Dialing (DID) or DID/Direct Outward Dialing (DOD) Access with BellSouth SWA LSBSA	Faster Signaling on DID
DID or DID/DOD with BellSouth SWA Basic Serving Arrangement for use with Dedicated Access Lines (WALS)	No Generic Name
Automatic Number Identification (ANI)/Charge Number (CN)	Calling Billing Number Delivery BellSouth SWA FGD
Answer Supervision	Answer Supervision with a Line Side Interface
BellSouth® Remote Access Service	No Generic Name (N)

® BellSouth is a registered trademark of BellSouth Intellectual Property Corporation

E6. BELLSOUTH SWA SERVICE (T)

E6.3 Common Switching and Transport Termination Optional Features (Cont'd)

E6.3.3 Basic Service Elements (BellSouth SWA Basic Serving Arrangement Customers Only) (Cont'd) (T)

A. (Cont'd)

1. Hunt Group Arrangement

This option provides the ability to sequentially access one of two or more line side connections in the originating direction, when the access code of the line group is dialed. ***BellSouth SWA*** FGA services with different methods of providing off-hook supervisory signaling (i.e., provided by customer's equipment vs. forwarded by customer's equipment when the called party answers) cannot be mixed in the same hunt group arrangement. The IC will specify the type of multiline hunt group desired. The types of hunt group arrangements are: Regular Hunt, Preferential Hunt, Circular Hunt with Preferential Hunt, and Circular Hunt with Regular Hunt. This arrangement contemplates one access code (i.e., telephone number) per arrangement. ***BellSouth SWA*** MTS/***BellSouth SWA*** WATS type ***BellSouth SWA*** LSBSA and ***BellSouth SWA*** FX/***BellSouth SWA*** ONAL ***BellSouth SWA*** LSBSA services cannot be mixed in the same hunt group arrangement. This feature, available with ***BellSouth SWA*** LSBSA, is provided from suitably equipped Company offices. (T)

The ***BellSouth SWA*** LSBSA dial tone office utilized for a Hunt Group Arrangement must be the same for all ***BellSouth SWA*** LSBSA lines in the arrangement. The IC may specify that the ***BellSouth SWA*** LSBSA lines in the Hunt Group Arrangement be connected to the same IC-designated location for transport to another state or that the lines be connected to multiple IC-designated locations for transport to another state. A split arrangement (two or more IC-designated locations) is available only when the customer-designated locations are served from the same serving wire center. IC service record information needed to add more than one IC-designated location to the arrangement, or to modify the service arrangement after initial establishment, must be obtained from the HGA ***BellSouth SWA*** LSBSA IC. (T)

2. Uniform Call Distribution Arrangement (T)

This option provides a type of multiline hunting arrangement which provides for an even distribution of calls among the available lines in a hunt group. ***BellSouth SWA*** FGA services with different methods of providing off-hook supervisory signaling (i.e., provided by the IC's equipment vs. forwarded by the IC's equipment when the called party answers) cannot be mixed in the same hunt group arrangement. This feature, available with ***BellSouth SWA*** LSBSA, is provided from suitably equipped Company offices.

3. Nonhunting Number for use with Hunt Group or Uniform Call Distribution Arrangement (T)

This option provides an arrangement for an individual line within a multiline hunt or UCD group that provides access to that line within the hunt or UCD group when it is idle or provides busy tone when it is busy, when the nonhunting number is dialed. This feature, available with ***BellSouth SWA*** LSBSA, is provided from suitably equipped Company offices.

4. Simplified Message Desk Interface (SMDI) (Message Desk (SMDI)) (T)

This option provides call-related information for calls utilizing a ***BellSouth SWA*** LSBSA multiline hunt group arrangement. SMDI provides the capability for delivering the called directory number, the calling directory number, and a call forwarding indicator (i.e., call forwarding busy, call forwarding don't answer, or direct call). This information is transmitted to the customer's premises utilizing a DNAL provided under the ***BellSouth SWA*** Transport sections of this Tariff. In addition, where customer equipment exists, SMDI will allow a customer to activate a message waiting indicator to the called directory number.

E6. BELLSOUTH SWA SERVICE (T)

E6.3 Common Switching and Transport Termination Optional Features (Cont'd)

E6.3.3 Basic Service Elements (BellSouth SWA Basic Serving Arrangement Customers Only) (Cont'd) (T)

A. (Cont'd)

4. Simplified Message Desk Interface (SMDI) (Message Desk (SMDI)) (Cont'd)

The IC shall provide the appropriate customer premise equipment to store, display or print the transmitted call status information as well as equipment to activate or deactivate the message waiting indicator. The Company assumes no liability and will be held harmless for any incompatibility of the IC's equipment to perform satisfactorily with this feature. This BSE, available with ***BellSouth SWA*** LSBSA, is provided from suitably equipped Company offices on an intraoffice basis. The IC is responsible for providing a modem at customer premises which interfaces BOC equipment at 1200 baud ASCII. (T)

E6. BELLSOUTH SWA SERVICE (T)

E6.3 Common Switching and Transport Termination Optional Features (Cont'd)

E6.3.3 Basic Service Elements (BellSouth SWA Basic Serving Arrangement Customers Only) (Cont'd) (T)

A. (Cont'd)

5. Surrogate Client Number (SCN) (No Generic Name)

This option allows a IC to purchase one or more telephone numbers that are permanently forwarded to a multiline hunt group over an SMDI line. This capability permits the IC to have a specially assigned telephone number (SCN) for its client. This number appears in the IC's serving central office in order to permit the client's calling telephone number to be transmitted to the IC's premises using SMDI. This BSE, available with ***BellSouth SWA*** LSBSA, is provided from suitably equipped Company offices. The number associated with SCN is not available for listing purposes. (T)

6. Bulk Calling Line Information Delivery (BCLID) (Calling Directory Number Delivery Via BCLID)

This option provides call-related information for calls utilizing a ***BellSouth SWA*** LSBSA service multiline hunt group arrangement. This information is transmitted over a DNAL facility provided under the ***BellSouth SWA*** Transport sections of this Tariff. Information transmitted includes calling directory number, called directory number, time the call was placed, calling line type (individual or group), and called line status (i.e., busy or idle). (T)

The IC will provide the necessary customer premises equipment to receive, translate, display and/or store the transmitted data. The Company assumes no liability and will be held harmless for any incompatibility of the IC's equipment to perform satisfactorily with this feature. Call Detail information is not available on calls originated to the ***BellSouth SWA*** LSBSA line from outside the LATA unless the office is equipped and interconnected with Signaling System 7 (SS7). BCLID information is only available on calls originating and terminating within SS7 equipped areas. This BSE, available with ***BellSouth SWA*** LSBSA, is provided from suitably equipped Company offices. (T)

7. Queuing (Multiline Hunt Group UCD With Queuing)

This option provides the capability for the Company's central office to automatically queue calls to a specific multiline hunt group or uniform call distribution arrangement when all hunting group terminals are busy. The calling party will continue to receive ringing indication until the call is completed to the customer's premises. The timing of a call begins upon entrance into a queue. When a line becomes available, the call will be delivered to that line.

The IC may also choose to subscribe to an optional announcement service available with this BSE. This optional customized central office announcement permits audible ringing tone followed by customer-selected announcement(s) which notify the caller of the queue condition. The IC can also specify that the call be connected to a silent termination, audible ringing, or customer-provided music.

Call waiting and music after delay announcement services associated with this feature require a DNAL provided under the ***BellSouth SWA*** Transport sections of this Tariff. This BSE, available with ***BellSouth SWA*** LSBSA, is provided from suitably equipped Company offices. (T)

8. User Transfer (Three-way Call Transfer)

This option permits a IC who has established a call using an ***BellSouth SWA*** LSBSA service to add another party to the call to establish a three-way conference call. Once the three-way conference call has been established, the customer may drop its connection without disconnecting the other two parties and may use its service to make another call. In addition, a customer may hold an in-progress call and complete a second call while maintaining privacy from the first call. User Transfer is available with ***BellSouth SWA*** LSBSA and by definition utilizes two ***BellSouth SWA*** LSBSA lines, thereby generating two ***BellSouth SWA*** LSBSA measurements. This feature, available with ***BellSouth SWA*** LSBSA, is provided from suitably equipped Company offices. (T)

E6. BELLSOUTH SWA SERVICE (T)

E6.3 Common Switching and Transport Termination Optional Features (Cont'd)

E6.3.3 Basic Service Elements (BellSouth SWA Basic Serving Arrangement Customers Only) (Cont'd) (T)

A. (Cont'd)

9. Make Busy/Night Transfer (Make Busy Key)

This option provides the ability to create a busy or overflow condition for a multiline hunt group. Make Busy/Night Transfer requires a DNAL provided under the ***BellSouth SWA*** Transport sections of this Tariff. By activating a IC-provided key at its premises, the IC can place the group in an "all numbers busy" condition. Subsequent calls may be directed to a central office busy tone, customized central office announcement, or forwarded to an alternate location. Calls forwarded to an alternate location invokes the use of a second ***BellSouth SWA*** LSBSA line, thereby generating a second ***BellSouth SWA*** LSBSA measurement. This feature, available with ***BellSouth SWA*** LSBSA, is provided from suitably equipped Company offices on an intraoffice basis only. (T)

10. Direct Inward Dialing (DID) or DID/Direct Outward Dialing (DOD) Access Service with ***BellSouth SWA*** LSBSA (Faster Signaling on DID) (T)

This option provides for incoming calls (DID) to ICs' premises equipment from the network to reach a specific telephone number without the assistance of an attendant. This feature, available with ***BellSouth SWA*** LSBSA, is provided from suitably equipped Company offices. DID numbers will be provided in blocks consisting of a minimum of twenty consecutive numbers. DID Access Service is available with standard dial pulse signaling or optionally purchased MF or DTMF signaling and is available on inward only or two-way ***BellSouth SWA*** LSBSA lines. This feature is available only as a standalone BSE with ***BellSouth SWA*** LSBSA and therefore cannot be purchased in conjunction with any other BSE. (T)

11. Automatic Number Identificaton (ANI)/Charge Number (CN) (Calling Billing Number Delivery)

This option provides the automatic transmission of a three, seven or ten digit number and information digit to the IC terminal location for calls originating in the LATA, to identify the geographical calling area (NPA) or the calling station. ANI will identify the calling station, where possible, or at a minimum , identify the NPA from which the call originated. The three, seven or ten digit numbers will contain the following information: for three digit numbers, NPA only; for seven digit numbers, NXX+XXXX; for ten digit numbers, NPA+NXX+XXXX. With the exception of three digit ANI, the ANI feature is an end office software function which is associated on a call-by-call basis with (1) all individual transmission paths in a trunk group routed directly between an end office and an IC's terminal location or, where technically feasible, with (2) all individual transmission paths in a trunk group between an end office and an access tandem, and a trunk group between an access tandem and an IC's terminal location.

Three digit ANI is a software function of the SSP feature which is used in conjunction with ***BellSouth SWA 8XX Toll Free Dialing*** Ten Digit Screening service and occurs whenever the SSP feature detects an ***BellSouth SWA 8XX Toll Free Dialing*** Ten Digit Screening service call that does not include the originating caller's ANI. (T)

Three digit ANI, the originating NPA of the 800 call, is available with ***BellSouth SWA*** TSBSA 3 routed traffic only. Three digit ANI will be transmitted to the IC on all ***BellSouth SWA 8XX Toll Free Dialing*** Ten Digit Screening service calls that are processed by the SSP feature for which a complete ANI is not received from the subtending office that originates the 800 call. This includes, but is not limited to: (1) non equal access end offices which have their call recording function performed at a location other than the office which is performing the ***BellSouth SWA 8XX Toll Free Dialing*** Ten Digit Screening service function, (2) calls from non equal access switches that encounter an ANI failure, and (3) ANI failures from non equal access switches which have their call recording function performed by the office which supports the ***BellSouth SWA 8XX Toll Free Dialing*** Ten Digit Screening service function. (T)

E6. BELLSOUTH SWA ACCESS SERVICE

E6.3 Common Switching and Transport Termination Optional Features (Cont'd)

E6.3.3 Basic Service Elements (BellSouth SWA Basic Serving Arrangement Customers Only) (Cont'd)

A. (Cont'd)

11. (Cont'd)

The seven digit ANI telephone number is available with BellSouth SWA TSBSA 1 and TSBSA 2. With these Technical Options, technical limitations may exist in Company switching facilities which require ANI to be provided only on a directly trunked basis. ANI will be transmitted on all calls except those originating from multi-party lines, pay telephone lines using BellSouth SWA TSBSA 1, or when an ANI failure has occurred.

The ten digit ANI telephone number is only available with BellSouth SWA TSBSA 3 with multifrequency address signaling. When the BellSouth SWA CCSAC optional feature is specified, the IC may obtain an ANI equivalent by ordering the Charge Number optional feature, as specified following. The ten digit ANI telephone numbers consists of the Numbering Plan Area (NPA) plus the seven digit ANI telephone number. The ten digit ANI telephone number will be transmitted on all calls except those identified as multi-party line or ANI failure in which case only the NPA will be transmitted (in addition to the information digit described as follows).

Generally, the three digit and ten digit ANI telephone number is available with BellSouth SWA TSBSA 3, and with BellSouth SWA 8XX Toll Free Dialing Ten Digit Screening Service that uses BellSouth SWA TSBSA 3 service on a per class of service basis. The ten digit ANI number will be transmitted on calls except those where ANI cannot be provided because the conditions set forth following exist or, those from end offices not equipped to provide ANI. In these instances, only the three digit ANI and the information digits described as follows, if applicable, will be transmitted. Additionally, when the IC has ordered the 800 to POTS Number Delivery feature, information digits (i.e., 24) which identify the call as a 800 call will be forwarded to the IC's terminal location in addition to the ten digit POTS number. These information digits will also replace the information digits which identify the conditions set forth following when a POTS number is delivered to th IC's premises.

With BellSouth SWA TSBSA 2, ANI is provided from end offices at which Company recording for end user billing is not provided, or where it is not required, as with BellSouth SWA 8XX Toll Free Dialing Ten Digit Screening service. It is not provided from end offices for which the Company needs to forward ANI to its recording equipment.

Where ANI cannot be provided, e.g., on calls from four and eight party services, Information digits will be provided to the IC. (M)

The Information digits identify: (M)

- Telephone number is the station billing number - no special treatment is required. (M)
- Multiparty line-telephone number is a four or eight party line and cannot be identified - number must be obtained via an operator or in some other manner. (M)
- ANI failure has occurred in the end office switch which prevents identification of calling telephone number - must be obtained by operator or in some other manner. (M)
- Hotel/Motel originated call which requires room number identification. (M)
- Coinless station, hospital, inmate, etc., call which requires special screening or handling by the IC, and (M)
- Call is an Automatic Identified Outward Dialed (AIOD) call from an end user premises equipment. (M)

The ANI telephone number is the listed telephone number of the end user and is not the telephone number of the calling party. These ANI information digits are available with BellSouth SWA TSBSA. (M)

Charge Number (CN) is an ANI equivalent which provides for the automatic transmission of the ten digit billing number of the calling station number and originating line information. The specific protocol for CN is contained in the BellSouth Guidelines to Technical Publication TR-TSV-000905. This feature is available only with BellSouth SWA TSBSA 3 when BellSouth SWA CCSAC is specified. (M)

E6. BELLSOUTH SWA SERVICE

E6.3 Common Switching and Transport Termination Optional Features (Cont'd)

E6.3.3 Basic Service Elements (BellSouth SWA Basic Serving Arrangement Customers Only) (Cont'd)

A. (Cont'd)

12. Answer Supervision

This option provides the capability of delivering "on hook/off hook" supervisory signals from a Company end office to a line interface. The signals indicate when the called party has answered an incoming call (went "off hook") or ended a call (gone "on hook"). This feature, available with BellSouth SWA LSBSA, is provided from suitably equipped Company offices and only where non-digital facilities exist.

13. BellSouth® Remote Access Service

BellSouth® Remote Access Service provides one-way ports for the collection, concentration, signaling and aggregation of a customer's dial-up data traffic into a hub site. This option allows the customer's users (end user customer) to call into a remote access server. Connection to BellSouth® Remote Access Service is made by the end user customer dialing a BellSouth® SWA LSBSA local seven or ten-digit number. It is the customer's responsibility to order a sufficient number of BellSouth® SWA LSBSA services in a hunting configuration to carry the BellSouth® Remote Access Service traffic.

Remote access server equipment will be installed in a Company central office. The customer's equipment must support Layer 2 Tunneling Protocol (L2TP).

BellSouth® Remote Access Service is a customer controlled service that supports a dedicated, customer selected remote access server with backup dial-in capability or out-of-band frame relay for network management. The customer may select their remote access server based on the Company's approved equipment list. The customer will be responsible for the management of the remote access server for this service. Customer control indicates that the customer will have full responsibility for initial and ongoing configuration, software release levels and updates, and general code. All software updates must be compatible with associated Company network elements and systems. Monitoring, management, and reporting activities performed by the customer will occur over special access egress circuits into the remote access server or through a backup dial-in channel that the Company will provide for each site.

The Company will not have the ability to remotely access the remote access server for provisioning or management purposes. The Company will only provide remote hands operations support. Remote hands means that the customer identifies the problem and reports the trouble to the Company. The Company will resolve the problem as directed by the customer. Resolution of the problem may include providing hardware, central office switching maintenance, and deployment of human resources necessary to repair hardware failures and restore network service outages.

In addition, the Company will provide a single point of contact (SPOC) for customer service calls regarding provisioning and maintenance to all BellSouth® Remote Access Service customers that order a minimum port quantity of 75,000 ports within the BellSouth region. (N)

The customer will also be responsible for providing the egress circuit(s), as set forth in Sections E7. and E21. following, connecting BellSouth® Remote Access Service to the hub location designated by the customer. These circuits will be required to deliver the BellSouth® Remote Access Service traffic to the customer's designated location. These circuits can be ordered from the Company or other telecommunications providers with the execution of appropriate collocation agreements.

In order to maintain the quality of BellSouth® Remote Access Service, the Company reserves the right to perform preventive maintenance and software updates to the network. This could result in BellSouth® Remote Access Service being unavailable during the time period between 2:00 A.M. and 4:00 A.M. Eastern Time on any given Wednesday or Sunday. The Company only expects to utilize this maintenance window for any given remote access server on the average of once a quarter. However, the Company reserves the right to perform maintenance at any time, at its discretion, that it believes such maintenance is necessary. The Company will make every reasonable effort to provide notice to those customers likely to be affected by such maintenance work.

E6.3.4 Common Switching Optional Features for Use With Dedicated Access Lines (BellSouth SWA FG and BellSouth SWA Basic Serving Arrangement Customers)

A. These optional features are available to BellSouth SWA FG and BellSouth SWA Basic Serving Arrangement customers (as specified in the descriptions) at no additional charge.

1. Band Advance Arrangement for use with Dedicated Access Line Service

This option, which is provided in association with two or more Dedicated Access Line Service (DALS) groups, provides for the automatic overflow of terminating calls to a DALS group, when that group has exceeded its call capacity, to another DALS group with a band designation equal to or greater than that of the overflowing DALS group. This arrangement does not provide for call overflow from a group with a higher band designation to one with a lower one. This option is available with BellSouth SWA FGC, BellSouth SWA FGD, BellSouth SWA TSBSA 2 and TSBSA 3.

® BellSouth is a registered trademark of BellSouth Intellectual Property Corporation

E6. BellSouth SWA SERVICE (T)

E6.3 Common Switching and Transport Termination Optional Features (Cont'd)

E6.3.4 Common Switching Optional Features For Use With Dedicated Access Lines (a.k.a. BellSouth SPA) (BellSouth SWA FG and BellSouth SWA Basic Serving Arrangement Customers) (Cont'd) (T)

A. (Cont'd)

2. End Office End User Line Service Screening for use with Dedicated Access Line ***(a.k.a. BellSouth SPA)*** service

   This option provides the ability to verify that end user has dialed a called party address (by screening the called NPA and/or NXX on the basis of geographical bands selected by the Company) which is in accordance with that end user's service agreement with the IC, i.e., WATS. This option is provided in all Company electronic end offices and, where available, in electromechanical end offices in which Dedicated Access Line ***(a.k.a. BellSouth SPA)*** service is provided. It is available with ***BellSouth SWA FG***C, ***BellSouth SWA FG***D, ***BellSouth SWA*** TSBSA 2 and ***TSBSA*** 3. (T)

3. Hunt Group Arrangement for use with Dedicated Access Line ***(a.k.a. BellSouth SPA)*** service (T)

   This option provides the ability to sequentially access one of two or more Dedicated Access Line ***(a.k.a. BellSouth SPA)*** services (e.g., 800 Service access lines) in the terminating direction, when the hunting number of the Dedicated Access Line ***(a.k.a. BellSouth SPA)*** service group is forwarded from the IC to the Company. It is available with ***BellSouth SWA FG***C, ***BellSouth SWA FG***D, ***BellSouth SWA*** TSBSA 2 and ***TSBSA*** 3. This feature is provided in all Company end offices in which Dedicated Access Line ***(a.k.a. BellSouth SPA)*** service is provided. (T)

4. Uniform Call Distribution Arrangement for use with Dedicated Access Line ***(a.k.a. BellSouth SPA)*** service (T)

   This option provides a type of multiline hunting arrangement which provides for an even distribution of terminating calls among the available Dedicated Access Line ***(a.k.a. BellSouth SPA)*** services in the hunt group. Where available, this feature is only provided in Company electronic end offices in which Dedicated Access Line ***(a.k.a. BellSouth SPA)*** service is provided. It is available with ***BellSouth SWA FG***C, ***BellSouth SWA FG***D, ***BellSouth SWA*** TSBSA 2 and ***TSBSA*** 3. (T)

5. Nonhunting Number for use with Hunt Group Arrangement or Uniform Call Distribution Arrangement for use with Dedicated Access Line ***(a.k.a. BellSouth SPA)*** service (T)

   This option provides an arrangement for an individual Dedicated Access Line ***(a.k.a. BellSouth SPA)*** service within a multiline hunt or uniform call distribution group that provides access to that Dedicated Access Line ***(a.k.a. BellSouth SPA)*** service within the hunt or uniform call distribution group when it is idle or provides busy tone when it is busy, when the nonhunting number is dialed. Where available, this feature is only provided in Company electronic end offices in which Dedicated Access Line ***(a.k.a. BellSouth SPA)*** service is provided. This option is available with ***BellSouth SWA FG***C, ***BellSouth SWA FG***D, ***BellSouth SWA*** TSBSA 2 and ***TSBSA*** 3. (T)

E6.3.5 Basic Service Elements for Use With Dedicated Access Lines *(a.k.a. BellSouth SPA)* (*BellSouth SWA Basic Serving Arrangement* Customers Only) (T)

A. This BSE is available to ***BellSouth SWA Basic Serving Arrangement*** customers only (as specified in the description). As an unbundled BSE its charges are detailed in E6.8.3. For this BSE, the bracketed name is the Service Name as listed in the ONA Services User Guide. (T)

1. Direct Inward Dialing (DID) or DID/DOD with ***BellSouth SWA Basic Serving Arrangement***s Access Service for Use with Dedicated Access Lines (No Generic Name) (T)

   This option provides for incoming (DID) calls to customers' premise equipment from the network to reach a specific telephone number without the assistance of an attendant. This feature, available for use with Dedicated Access Lines ordered from Section E7. of this Tariff, is provided from suitably equipped Company offices. DID numbers will be provided in blocks consisting of a minimum of twenty consecutive numbers. This BSE is available with standard dial pulse signaling or optionally purchased MF or DTMF signaling and is available on inward only or two-way Dedicated access lines. This feature is available to ***BellSouth SWA*** LSBSA and ***BellSouth SWA*** TSBSA customers only as a standalone local switching optional feature with Dedicated access lines and therefore cannot be purchased in conjunction with any other local switching optional feature. (T)

E6. BELLSOUTH SWA SERVICE (T)

E6.3 Common Switching and Transport Termination Optional Features (Cont'd)

E6.3.6 BellSouth SWA Transport Termination Optional Features (T)

A. Following are descriptions of various optional features that are available in lieu of, or in addition to, the standard features provided with the ***BellSouth SWA FG***s and ***BellSouth SWA Basic Serving Arrangement***. (T)

1. Rotary Dial Station Signaling

   This option provides for the transmission of called party address signaling from rotary dial stations to the IC terminal location for originating calls. This option is provided in the form of a specific type of Transport Termination. It is available with ***BellSouth SWA FG***B and ***BellSouth SWA*** TSBSA 1, only on a directly trunked basis. (T)

2. Operator Trunk - Coin, Non-Coin or Combined Coin and Non-Coin

   This option may be ordered to provide coin, non-coin, or combined coin and non-coin operation. It is available only with ***BellSouth SWA FG***C, ***BellSouth SWA FG***D, ***BellSouth SWA*** TSBSA 2 and ***TSBSA*** 3 and is provided in electronic end offices and other Company end offices where equipment is available. It is provided as a trunk type of ***BellSouth SWA*** Transport Termination. (T)

E6. BELLSOUTH SWA SERVICE (T)

E6.3 Common Switching and Transport Termination Optional Features (Cont'd)

E6.3.6 BellSouth SWA Transport Termination Optional Features (Cont'd) (T)

A. (Cont'd)

2. Operator Trunk - Coin, Non-Coin or Combined Coin and Non-Coin (Cont'd)

Coin

This arrangement provides for initial coin return control and routing of 0+, 0-, 1+ or 01+ prefixed originating coin calls requiring operator assistance to the IC's terminal location. Because operator assisted coin calling traffic is routed over a trunk group dedicated to operator assisted calls, this arrangement is only provided in association with the Service Class Routing option.

The operator assistance coin calling arrangement is also normally ordered by the IC in conjunction with the ANI optional feature or BSE, since the preponderance of trunk groups equipped with this arrangement will be terminated in the IC's Operator Services systems, rather than in the IC's manual cord boards.

Non-Coin

This arrangement provides for the routing of 0+, 0-, 1+ or 01+ prefixed originating non-coin calls requiring operator assistance to the IC's terminal location. Because operator assisted non-coin calling traffic is routed over a trunk group dedicated to operator assisted calls, this arrangement is only provided in association with the Service Class Routing option. The operator assistance non-coin calling arrangement is also normally ordered by the IC in conjunction with the ANI optional feature or BSE, since the preponderance of trunk groups equipped with this arrangement will be terminated in the IC's Operator Services systems, rather than in the IC's manual cord boards. When so equipped, the ANI optional feature or BSE provides for the forwarding of information digits which identify that the call has originated from a hotel or motel, and whether room number identification is required, or that special screening is required, e.g., for coinless public stations, dormitory, inmate stations or other screening arrangements agreed to between the IC and the Company.

Combined Coin and Non-Coin

This arrangement provides for initial coin return control and routing of 0+, 0-, 1+ or 01+ prefixed originating operator assisted coin and non-coin calls requiring operator assistance to the IC's terminal location. Because operator assisted coin and non-coin calling traffic is routed over a trunk group dedicated to operator assisted calls, this arrangement is only provided in association with the Service Class Routing option.

This arrangement is normally ordered by the IC in conjunction with the ANI optional feature or BSE, since the preponderance of trunk groups equipped with this arrangement will be terminated in the IC's operator services systems, rather than in the IC's manual cord boards. When so equipped, the ANI optional feature or BSE provides for the forwarding of information digits which identify that the call has originated from a hotel or motel, and whether room number identification is required, or that special screening is required, e.g., for coinless public stations, dormitory, or inmate stations, or other screening arrangements agreed to between the IC and the Company.

3. Operator Trunk - Full Feature (T)

This option provides the operator functions available in the end office to the IC's operator. These functions are: (1) Operator Released, (2) Operator Attached, (3) Coin Collect, (4) Coin Return, and (5) Ringback. This arrangement is only provided in association with the service Class Routing option. It is available with ***BellSouth SWA FG***D and ***BellSouth SWA*** TSBSA 3 and is provided as a trunk type of ***BellSouth SWA*** Transport Termination. This option is not available in combination with the ***BellSouth SWA*** CCSAC option.

E6. BELLSOUTH SWA SERVICE

E6.4 Transmission Specifications

Each BellSouth SWA service transmission path is provided with a standard transmission specifications. There are three different standard specifications (Types A, B and C). The standard for a particular transmission path is dependent on the BellSouth SWA FG or BellSouth SWA Basic Serving Arrangement, the Interface Group Arrangement and whether the service is directly routed or via an access tandem. When directly routed service is equipped with the tandem signaling option, Type A transmission specifications will be the standard. The available transmission specifications are set forth in E6.4.1 following. Data Transmission Parameters are also provided with each BellSouth SWA service Transmission path. The Company will, upon notification by the IC that the parameters set forth in E6.4.2.A. or E6.4.2.B. following are not being met, conduct tests independently or in cooperation with the IC, and take any necessary action to insure that the data parameters are met.

The Company will maintain existing transmission specifications on functioning service configurations installed prior to the effective date of this Tariff except that service configurations having performance specifications exceeding the standards listed in this provision will be maintained at performance levels specified in this Tariff.

The transmission specifications contained in this Section are immediate action limits. Acceptance limits are set forth in Technical Reference PUB TR-NPL-62500. This Technical Reference also provides the basis for determining BellSouth SWA service maintenance limits. Transmission specifications for CCS***7 S***ignaling ***C***onnections ***and CCS7 Signaling Terminations*** are set forth in the BellSouth Guidelines to Technical Publication TR-TSV-000905. Transmission Specifications for 64 CCC are set forth in the Technical Publication TR-TSV-000962. (C)

E6.4.1 Standard Transmission Specifications

Following are descriptions of the three Standard Transmission Specifications available with BellSouth SWA FGs and BellSouth SWA Basic Serving Arrangements. The specific applications in terms of the BellSouth SWA FGs and BellSouth SWA Basic Serving Arrangements and Interface Groups with which the BellSouth SWA FG and BellSouth SWA Basic Serving Arrangements Standard Transmission Specifications are provided are set forth in E6.2.1.C., E6.2.2.C., E6.2.3.C., E6.2.4.C. E6.2.8.C., E6.2.9.A.3., E6.2.9.B.3., and E6.2.9.C.3. preceding.

A. Type A Transmission Specifications

Type A Transmission Specifications are provided with the following parameters:

1. Loss Deviation

   The maximum Loss Deviation of the 1004 Hz loss relative to the Expected Measured Loss (EML) is +/- 2.0 dB.

2. Attenuation Distortion

   The maximum Attenuation Distortion in the 404 to 2804 Hz frequency band relative to the loss at 1004 Hz is -1.0 dB to +3.0 dB.

3. C-Message Noise

   The maximum C-Message Noise for the transmission path at the route miles listed is less than or equal to:

C-Message Noise	Route Miles
32 dBrnCO	less than 50
34 dBrnCO	51 to 100
37 dBrnCO	101 to 200
40 dBrnCO	201 to 400

E6. BELLSOUTH SWA SERVICE (T)

E6.4 Transmission Specifications (Cont'd)

E6.4.1 Standard Transmission Specifications (Cont'd)

A. Type A Transmisson Specifications (Cont'd)

3. C-Message Noise (Cont'd)

42 dBrnCO	401 to 1000

4. C-Notch Noise

The maximum C-Notch Noise, utilizing a-16 dBmO holding tone is less than or equal to 45 dBrnCO.

5. Echo Control

Echo Control, identified as Equal Level Echo Path Loss, and expressed as Echo Return Loss and Singing Return Loss , is dependent on the routing, i.e., whether the service is routed directly from the IC Point of Interface (POI) to the end office or via an access tandem. It is equal to or greater than the following:

Routing Configuration	Echo Return Loss	Singing Return Loss
POI to Access Tandem	21 dB	14 dB
POI to End Office		
- Direct	N/A	N/A
- Via Access Tandem	16 dB	11 dB
- Direct equipped with Tandem Signaling	16 dB	11 dB

E6. BELLSOUTH SWA SERVICE (T)

E6.4 Transmission Specifications (Cont'd)

E6.4.1 Standard Transmission Specifications (Cont'd)

B. Type B Transmission Specifications

Type B Transmission Specifications are provided with the following parameters:

1. Loss Deviation

   The maximum Loss Deviation of the 1004 Hz loss relative to the Expected Measured Loss (EML) is +/- 2.5 dB.

2. Attenuation Distortion

   The maximum Attenuation Distortion in the 404 to 2804 Hz frequency band relative to loss at 1004 Hz is -2.0 dB to +4.0 dB.

3. C-Message Noise

   The maximum C-Message Noise for the transmission path at the route miles listed is less than or equal to:

	C-Message Noise[1]	
Route Miles	**Type B1**	**Type B2**
less than 50	32 dBrnCO	38 dBrnCO
51 to 100	33 dBrnCO	39 dBrnCO
101 to 200	35 dBrnCO	41 dBrnCO
201 to 400	37 dBrnCO	43 dBrnCO
401 to 1000	39 dBrnCO	45 dBrnCO

4. C-Notch Noise

   The maximum C-Notch Noise, utilizing a -16 dBmO holding tone is less than or equal to 47 dBrnCO.

Note 1: For ***BellSouth SWA FG***C, ***BellSouth SWA FG***D, ***BellSouth SWA*** TSBSA 2 and ***TSBSA*** 3 only Type B2 will be provided. For ***BellSouth SWA FG***A, ***BellSouth SWA FG***B, ***BellSouth SWA*** LSBSA and ***BellSouth SWA*** TSBSA 1 Type B1 or B2 will be provided as set forth in Technical Reference PUB 62500. (T)

E6. BELLSOUTH SWA SERVICE (T)

E6.4 Transmission Specifications (Cont'd)

E6.4.1 Standard Transmission Specifications (Cont'd)

B. Type B Transmission Specifications (Cont'd)

5. Echo Control

Echo Control, identified as Impedance Balance for ***BellSouth SWA*** FGA, ***BellSouth SWA*** FGB, ***BellSouth SWA*** LSBSA and TSBSA 1 and Equal Level Echo Path Loss for ***BellSouth SWA*** FGC, ***BellSouth SWA*** FGD, ***BellSouth SWA*** TSBSA 2 and ***TSBSA*** 3 and expressed as Echo Return Loss (ERL) and Singing Return Loss (SRL) is dependent on the routing, i.e., whether the service is routed directly from the IC Point of Interface (POI) to the end office or via an access tandem. The ERL and SRL also differ by ***BellSouth SWA FG*** and ***BellSouth SWA Basic Serving Arrangement***, type of termination, and type of transmission path. They are equal to or greater than the following: (T)

Routing Configuration	Echo Return Loss	Singing Return Loss	
POI to Access Tandem			
- Terminated in 4-Wire trunk	21 dB	14 dB	
- Terminated in 2-Wire trunk	16 dB	11 dB	
POI to End Office			
- Direct	16 dB	11 dB	
- Via Access Tandem			
For ***BellSouth SWA*** FGB and ***BellSouth SWA*** TSBSA 1	8 dB	4 dB	(T)
For ***BellSouth SWA*** FGC and ***BellSouth SWA Basic Serving Arrangement*** 2 (Effective 4-Wire transmission path at end office)	16 dB	11 dB	(T)
For ***BellSouth SWA*** FGC and ***BellSouth SWA Basic Serving Arrangement*** 2 (Effective 2-Wire transmission path at end office)	13 dB	6 dB	(T)

C. Type C Transmission Specifications

Type C Transmission Specifications are provided with the following parameters:

1. Loss Deviation

The maximum Loss Deviation of the 1004 Hz loss relative to the Expected Measured Loss (EML) is +/- 3.0 dB.

2. Attenuation Distortion

The maximum Attenuation Distortion in the 404 to 2804 Hz frequency band relative to loss at 1004 Hz is -2.0 dB to +5.5 dB.

E6. BELLSOUTH SWA SERVICE (T)

E6.4 Transmission Specifications (Cont'd)

E6.4.1 Standard Transmission Specifications (Cont'd)

C. Type C Transmission Specifications (Cont'd)

3. C-Message Noise

The maximum C-Message Noise for the transmission path at the route miles listed is less than or equal to:

	C-Message Noise[1]	
Route Miles	**Type C1**	**Type C2**
less than 50	32 dBrnCO	38 dBrnCO
51 to 100	33 dBrnCO	39 dBrnCO
101 to 200	35 dBrnCO	41 dBrnCO
201 to 400	37 dBrnCO	43 dBrnCO
401 to 1000	39 dBrnCO	45 dBrnCO

4. C-Notch Noise

The maximum C-Notch Noise, utilizing a-16 dBmO holding tone is less than or equal to 47 dBrnCO.

5. Echo Control

Echo Control, identified as Return Loss and expressed as Echo Return Loss and Singing Return Loss. It is equal to or greater than the following:

Routing Configuration	Echo Return Loss	Singing Return Loss
POI to End Office		
- Direct	13 dB	6 dB

E6.4.2 Data Transmission Parameters

Two types of Data Transmission Parameters, i.e., Type DA and Type DB, are provided for Feature Group arrangements and BSAs. The specific applications in terms of Feature Groups and BSAs with which they are provided are set forth in E6.2.1.C., E6.2.2.C., E6.2.3.C., E6.2.4.C., E6.2.8.C., E6.2.9.A.3., E6.2.9.B.3. and E6.2.9.C.3. preceding. Following are descriptions of each.

Note 1: For ***BellSouth SWA FG***s ***BellSouth SWA FG***C, ***BellSouth SWA FG***D, ***BellSouth SWA*** TSBSA 2 and ***TSBSA*** 3, ***BellSouth SWA FG*** 500 service, ***BellSouth SWA*** 8XX ***Toll Free Dialing*** Ten Digit Screening Service and ***BellSouth SWA*** 900 service, only Type C2 will be provided. For ***BellSouth SWA FG***A, ***BellSouth SWA FG***B, ***BellSouth SWA*** LSBSA and ***BellSouth SWA*** TSBSA 1, Type C1 or C2 will be provided as set forth in Technical Reference PUB 62500. (T)

E6. BELLSOUTH SWA SERVICE (T)

E6.4 Transmission Specifications (Cont'd)

E6.4.2 Data Transmission Parameters (Cont'd)

A. Data Transmission Parameters - Type DA

1. Signal to C-Notched Noise Ratio
   The Signal to C-Notched Noise Ratio is equal to or greater than 33 dB.
2. Envelope Delay Distortion
   The maximum Envelope Delay Distortion for the frequency bands and route miles specified is:

604 to 2804 Hz	
less than 50 route miles	500 microseconds
equal to or greater than 50 route miles	900 microseconds

1004 to 2404 Hz	
less than 50 route miles	200 microseconds
equal to or greater than 50 route miles	400 microseconds

3. Impulse Noise Counts
   The Impulse Noise Counts exceeding a 65 dBrnCO threshold in 15 minutes is no more than 15 counts.
4. Intermodulation Distortion
   The Second Order (R2) and Third Order (R3) Intermodulation Distortion products are equal to or greater than:

Second Order (R2)	33 dB
Third Order (R3)	37 dB

5. Phase Jitter
   The Phase Jitter over the 4 to 300 Hz frequency band is less than or equal to 5 degrees peak-to-peak.
6. Frequency Shift
   The maximum Frequency Shift does not exceed -2 to +2 Hz.

B. Data Transmission Parameters - Type DB

1. Signal to C-Notched Noise Ratio
   The Signal to C-Notched Noise Ratio is equal to or greater than 30 dB.
2. Envelope Delay Distortion
   The maximum Envelope Delay Distortion for the frequency bands and route miles specified is:

604 to 2804 Hz	
less than 50 route miles	800 microseconds
equal to or greater than 50 route miles	1000 microseconds

E6. BELLSOUTH SWA SERVICE (T)

E6.4 Transmission Specifications (Cont'd)

E6.4.2 Data Transmission Parameters (Cont'd)

B. Data Transmission Parameters - Type DB (Cont'd)

2. Envelope Delay Distortion (Cont'd)

1004 to 2404 Hz	
less than 50 route miles	320 microseconds
equal to or greater than 50 route miles	500 microseconds

3. Impulse Noise Counts

   The Impulse Noise Counts exceeding a 67 dBrnCO threshold in 15 minutes is no more than 15 counts.

4. Intermodulation Distortion

   The Second Order (R2) and Third Order (R3) Intermodulation Distortion products are equal to or greater than:

   Second Order (R2) 31 dB

   Third Order (R3) 34 dB

5. Phase Jitter

   The Phase Jitter over the 4 to 300 Hz frequency band is less than or equal to 7 degrees peak-to-peak.

6. Frequency Shift

   The maximum Frequency Shift does not exceed -2 to +2 Hz.

E6.5 Obligations of the Company

In addition to the obligations of the Company set forth in E2. preceding, the Company has certain other obligations pertaining only to the provision of ***BellSouth SWA*** service. These obligations are as follows: (T)

E6.5.1 Network Management

The Company will administer its network to insure the provision of acceptable service levels to all telecommunications users of the Company's network services. Generally, service levels are considered acceptable only when both end users and ICs are able to establish connections with little or no delay encountered within the Company network. The Company maintains the right to apply protective controls, i.e., those actions, such as call gapping, which selectively cancel the completion of traffic, over any traffic carried over its network, including that associated with a IC's ***BellSouth SWA*** service. Generally, such protective measures would only be taken as a result of occurrences such as failure or overload of Company or IC facilities, natural disasters, mass calling or national security demands. In the event that the protective controls applied by the Company result in the complete loss of service by the IC, the IC will be granted a Credit Allowance for Service Interruption as set forth in E2.4.4. preceding. (T)

E6. BELLSOUTH SWA SERVICE (T)

E6.5 Obligations of the Company (Cont'd)

E6.5.2 Design and Traffic Routing of BellSouth SWA Service (T)

For ***BellSouth SWA FG***A, ***BellSouth SWA FG***B, ***BellSouth SWA*** LSBSA and ***BellSouth SWA*** TSBSA 1 and ***BellSouth SWA FG***D and ***BellSouth SWA*** TSBSA 3 ordered in trunks, the IC desired line or trunk directionality and or traffic routing of the ***BellSouth SWA s***ervice between the IC's terminal location and the entry switch are determined by the IC's order for service. The Company will determine the optimal network configuration based on the capacity ordered. If the IC desires routing or directionality different from the optimal configuration determined by the Company, the Company will work cooperatively with the IC in determining (1) whether the service is to be routed directly to an end office or through an access tandem switch and (2) the directionality of the service before establishing a firm order. Additionally, for ***BellSouth SWA FG***B and ***BellSouth SWA*** TSBSA 1 the IC may order the optional feature IC Specification of ***BellSouth SWA*** Transport Termination. (T)

E6. BELLSOUTH SWA SERVICE

E6.5 Obligations of the Company (Cont'd)

E6.5.3 Provision of Service Performance Data

Subject to availability, end-to-end service performance data available to the Company through its own service evaluation routines, may also be made available to the IC based on previously arranged intervals and format. These data provide information on overall end-to-end call completion and non-completion performance, e.g., IC equipment blockage, failure results and transmission performance. These data do not include service performance data which are provided under other tariff sections, e.g., testing service results. If data are to be provided in other than paper format, the charges for such exchange will be determined on an individual case basis.

E6.5.4 Trunk Group Measurements Reports

Subject to availability, the Company will make available trunk group data in the form of usage in CCS, peg count and overflow, to the IC based on previously agreed to intervals.

E6.5.5 Determination of Number of Transmission Paths

The following applies to switched access voice transmission paths, and does not apply to ***CCS7 S***ignaling ***C***onnections ***and CCS7 Signaling Terminations*** provided. Then number of transmission paths for ***CCS7 S***ignaling ***C***onnections ***and CCS7 Signaling Terminations*** will be determined jointly by the Company and the ***customer***. Any specialized routing or additional diversity requirements of the ***customer*** are provided as set forth in Section E11. following. (C)

The IC's order for BellSouth SWA FGA and BellSouth LSBSA, which are ordered on a per line basis, and BellSouth SWA FGB and BellSouth SWA TSBSA 1 which are ordered on a per trunk basis, and BellSouth SWA FGD and BellSouth SWA TSBSA 3 which are ordered on a per trunk basis, or the BellSouth SWA Transport facilities ordered determines the number of transmission paths for BellSouth SWA service. A transmission path is a communication path within the frequency bandwidth of approximately 300 to 3000 Hz or a derived communication path of a frequency bandwidth of approximately 300 Hz to 3000 Hz provided over a high frequency analog facility or high speed digital facility between an IC terminal location and a Company location.

E6.5.6 Determination of Number of End Office Transport Terminations

For analog entry switches, a termination may be provided for each transmission path provided. For digital entry switches, an equivalent termination may be provided for each transmission path provided.

E6.5.7 Design Blocking Probability

A. The Company will design and monitor the trunk groups used in the provision of BellSouth SWA service to meet the blocking probability criteria as set forth in 1. through 4 following.

1. For BellSouth SWA FGA and BellSouth SWA LSBSA no design blocking criteria apply.
2. For BellSouth SWA FGB and BellSouth SWA FGC and BellSouth SWA TSBSA 1 and BellSouth SWA 2 the design blocking objective will be no greater than one percent (.01) between the point of interface at the IC terminal location and the first point of switching when traffic is directly routed without an alternate route. Standard traffic engineering methods will be used by the Company to determine the number of transmission paths required to achieve this level of blocking.

E6. BELLSOUTH SWA SERVICE (T)

E6.5 Obligations of the Company (Cont'd)

E6.5.7 Design Blocking Probability (Cont'd)

A. (Cont'd)

3. For ***BellSouth SWA FG***D and ***BellSouth SWA*** TSBSA 3, the design blocking objective will be no greater than one percent (.01) between the point of interface at the IC terminal location and the end office switch, whether the traffic is directly routed without an alternate route or when routed via an access tandem. Standard traffic engineering methods as set forth in reference document Technical Reference PUB TR EOP-000178 Trunk Traffic Engineering Concepts and Applications will be used by the Company to determine the number of transmission paths required to achieve this level of blocking. (T)

4. The design blocking criteria ***BellSouth SWA 8XX Toll Free Dialing Ten Digit Screening*** service or ***BellSouth SWA*** 900 service provided from an end office equipped with equal access capabilities will be equivalent to that set forth preceding for ***BellSouth SWA FG***D and ***BellSouth SWA*** TSBSA 3 except when more than one tandem is employed in the transport of a ***BellSouth SWA*** 500 service, ***8XX Toll Free Dialing Ten Digit Screening*** service or ***BellSouth SWA*** 900 service call. In the event of a ***BellSouth SWA*** 900 service media stimulated call, the design blocking objective of no greater than one percent (.01) will not be guarant (T)

5. The Company will perform routine measurement functions for the trunk capacity ordered, in accordance with Company design blocking criteria to assure that an adequate number of transmission paths are in service. The Company will recommend that additional capacity (i.e., trunks) be ordered by the IC when additional paths are required to reduce the measured blocking to the designed blocking level. Where design blocking criteria apply, the design blocking objective is assumed to have been met if the routine measurements show that the measured blocking does not exceed the threshold listed in the following tables.

   a. For transmission paths carrying only first routed traffic direct between an end office and an IC terminal location without an alternate route, and for paths carrying only overflow traffic, the measured blocking thresholds are as follows:

Number of Transmission Paths Per Trunk Group	**Measured Blocking Thresholds in the Time Consistent Busy Hour for the Number of Measurements Per Trunk Group**			
	15-20 Measure-ments	**11-14 Measure-ments**	**7-10 Measure-ments**	**3-6 Measure-ments**
2	.070	.080	.090	.140
3	.050	.060	.070	.090
4	.050	.060	.070	.080
5-6	.040	.050	.060	.070
7 or more	.030	.035	.040	.060

E6. BELLSOUTH SWA SERVICE (T)

E6.5 Obligations of the Company (Cont'd)

E6.5.7 Design Blocking Probability (Cont'd)

A. (Cont'd)

4. (Cont'd)

b. For transmission paths carrying first routed traffic between an end office and an IC terminal location via an access tandem, the measured blocking thresholds are as follows:

Number of Transmission Paths Per Trunk Group	Measured Blocking Thresholds in the Time Consistent Busy Hour for the Number of Measurements Per Trunk Group			
	15-20 Measure-ments	11-14 Measure-ments	7-10 Measure-ments	3-6 Measure-ments
2	.045	.055	.060	.096
3	.035	.040	.045	.060
4	.035	.040	.045	.055
5-6	.025	.035	.040	.045
7 or more	.020	.025	.030	.040

E6.6 Obligations of the IC

In addition to the obligations of the IC set forth in E2. preceding, the IC has certain specific obligations pertaining to the use of ***BellSouth SWA*** service. These obligations are as follows: (T)

E6.6.1 Report Requirements

A. ICs are responsible for providing the following reports to the Company, when applicable.

1. Jurisdictional Reports

When an IC orders ***BellSouth SWA*** service for both interstate and intrastate use, the IC is responsible for providing reports as set forth in E2.3.14 preceding. Charges will be apportioned in accordance with those reports. The method to be used for determining the intrastate charges is set forth in E2.3.15. preceding. (T)

2. Code Screening Reports

When an IC orders service class routing, trunk access limitation or call gapping arrangements, it must report the number of trunks and/or appropriate codes to be instituted in each end office or access tandem switch, for each of the arrangements ordered.

3. 500/900 NXX Code Testing

When ordering ***BellSouth SWA*** 500 service or ***BellSouth SWA*** 900 service, the IC will reserve and assign within their network the 500/900 NXX-4141 as an access test number(s). The Company will use this number to verify that ***BellSouth SWA*** 500/***BellSouth SWA*** 900 service is being provided to the IC's network when the IC's 500/900 NXX is activated in the Company's network. (T)

4. 500/900 NXX Code Trouble Reporting

When ordering ***BellSouth SWA*** 500 service or ***BellSouth SWA*** 900 service, the IC will reserve and assign within their network the 500/900 NXX-0000 as a trouble reporting number(s). The Company will use this number(s) to assure the IC that originating ***BellSouth SWA*** 500/***BellSouth SWA*** 900 service trouble reports are being reported to their trouble reporting centers. (T)

E6. BELLSOUTH SWA SERVICE

E6.6 Obligations of the IC (Cont'd)

E6.6.2 Supervisory Signaling

The IC 's facilities shall provide the necessary on and off-hook, answer, and disconnect supervision.

E6.6.3 Trunk Group Measurements Report

With the agreement of the IC, trunk group data in the form of usage in CCS, peg count and overflow for its end of all access trunk groups, where technologically feasible, will be made available to the Company. These data will be used to monitor trunk group utilization and service performance and will be based on previously arranged intervals and format.

E6.6.4 Design of BellSouth SWA Services

When an IC orders BellSouth SWA service, it is the IC's responsibility to assure that sufficient access service facility quantities have been ordered to handle its traffic.

E6.6.5 Billing Data For Terminating Usage

When an IC uses the service(s) of an alternative access provider or alternative tandem service provider and as a result the Company is unable to record usage terminated via dedicated trunks with sufficient specificity to identify the access IC of record, the alternative access provider or alternative tandem service provider must provide the Company with billing data so the Company can properly measure and bill the access minutes. The record that will be used for the transmission of data is the 110120 record. A description of the record and the fields contained can be found in BellCore Publication SR-STS-000320, Message Interface. It is the responsibility of the alternative access provider or alternative tandem service provider to provide the billing data information to the Company on a daily basis. Failure on the part of the alternative provider to comply with the requirements of this paragraph will result in the Company's billing the alternative provider all terminating access minutes.

E6.7 Rate Regulations

This section contains the specific regulations governing the rates and charges that apply for *BellSouth SWA* service.

E6.7.1 Description and Application of Rates and Charges

A. There are three types of rates and charges that apply to BellSouth SWA service. These are monthly rates, usage rates and nonrecurring charges. These rates and charges are applied differently to the various rate elements.

1. Monthly Rates

   Monthly rates are flat recurring rates that apply each month or fraction thereof that a specific rate element is provided. Elements having a monthly "per mile" charge are charged per mile, per month. For the Switched DNAL, the applicable mileage band rate will be applied per mile, per month. For billing purposes, each month is considered to have thirty days.

2. Usage Rates

   Usage rates are rates that apply only when a specific rate element is used. These are applied on a per access minute or per message basis. BellSouth SWA Common Transport transmission rates will be applied on a per mile, per minute of use basis. Usage charges are accumulated over a monthly period.

   a. BellSouth SWA 8XX Toll Free Dialing Ten Digit Screening Service

      A per call charge, as specified in E6.8.4 following, applies for each 800 call utilizing 800 BellSouth SWA 8XX Toll Free Dialing Ten Digit Screening Service for which an 800 BellSouth SWA 8XX Toll Free Dialing Ten Digit Screening Service IC is identified.

   b. BellSouth SWA 500 service

      A per call charge, as specified in E6.8.13 following, applies for each 500 call.

   c. BellSouth CCS7 Access Arrangement Usage (N)

      (1) An Integrated Switched Digital Network User Part (ISUP) usage charge per signaling message applies as specified in E6.8.1 following. (N)

      (2) A TCAP usage charge per signaling message applies as specified in E6.8.1 following. (N)

E6. BELLSOUTH SWA SERVICE

E6.7 Rate Regulations (Cont'd)

E6.7.1 Description and Application of Rates and Charges (Cont'd)

A. (Cont'd)

3. Nonrecurring Charges

Nonrecurring charges are one-time charges that apply for a specific work activity (i.e., installation of new service or change to an existing service). The types of nonrecurring charges that apply for BellSouth SWA service are: installation of new service, installation of optional features and BSEs, service rearrangements, transfer of service, BellSouth SWA 500, BellSouth SWA 8XX Toll Free Dialing Ten Digit Screening , and BellSouth SWA 900 service.

The following list identifies the individual BellSouth SWA service elements, for which charges are set forth in Section E6. of this Tariff, which are eligible for credit of nonrecurring charges under "Service Installation Guarantee" found in E2.4.10 preceding. ***Customers with these services are not eligible for the Service Installation Guarantee when the requested installation, move or rearrangement service order interval is four days or less as measured from the Application Date of the order***. (C)

- Switched Local Channels
- Switched Transport (Interoffice Channel) Installation
- Dedicated Network Access Line Service, and
- Optional Features (Installed coincident with Switched Local Channels, Switched Interoffice Channels and Associated Channelization Equipment)

The following list identifies the BellSouth SWA service elements not eligible for credit of nonrecurring charges under "Service Installation Guarantee" found in E2.4.10 preceding:

BellSouth SWA service Rearrangements, Conversions, and/or Inside Moves,

E6. BELLSOUTH SWA SERVICE

E6.7 Rate Regulations (Cont'd)

E6.7.1 Description and Application of Rates and Charges (Cont'd)

A. (Cont'd)

3. Nonrecurring Charges (Cont'd)

Activation of BellSouth SWA 500 and BellSouth SWA 900 service NXX codes,

BellSouth SWA 8XX Toll Free Dialing Ten Digit Screening Service

The BellSouth SWA FGD BellSouth SWA Common Channel Signaling Access Capability (CCSAC) and the SS7 Signaling Connection ***and the Point Code Establishment or Change*** (C)

Transfer of Service

BellSouth® Remote Access Service

ICs will be exempt from nonrecurring charges for the installation of new switched access transport facilities and optional features associated with those facilities, as set forth in 6.8.1 following, prompted by Local Transport Restructure, pursuant to the provisions of c. and d., following during the time periods established therein.

The exemption is applicable to the installation of facilities in connection with those rearrangements of existing switched access services which qualify for the waiver of service rearrangement nonrecurring charges for rollovers and grooming, as set forth in E6.7.1.A.3.

a. Installation of New Service

Nonrecurring charges apply to each BellSouth SWA service installed. For BellSouth SWA FGA/BellSouth SWA LSBSA and BellSouth SWA FGB /BellSouth SWA TSBSA 1 BellSouth SWA services, which are ordered on a per line or trunk basis respectively, and for BellSouth SWA FGD and BellSouth SWA TSBSA 3 when ordered on a per trunk basis, the charge is applied per line or trunk. In addition, when a ***CCS7 S***ignaling ***C***onnection***s are*** installed, the charge is applied per signaling connection. (C)

(1) Switched Local Channel

Nonrecurring charges, as set forth in E6.8.1. following, apply to each BellSouth SWA service installed. When one Switched Local Channel is ordered and installed, it is billed at the First Service installed rate. When more than one Switched Local Channel of the same type is ordered and installed at the same locations, for the same IC, at the same time, the first Switched Local Channel is billed at the "First Service" installed charge and the other Switched Local Channels are billed at the "Additional Service" installed charges. Services requested on multiple ASRs will be treated as one request when requirements, as specified in E6.1.7 are met, and will receive "First" and "Additional" treatment.

(2) BellSouth SWA Dedicated Transport

The nonrecurring charge for the BellSouth SWA Dedicated Interoffice Transport, as set forth in E6.8.1 following, will be applied each time BellSouth SWA Dedicated Interoffice Transport is ordered by the IC.

® BellSouth is a registered trademark of BellSouth Intellectual Property Corporation

E6. BELLSOUTH SWA SERVICE (T)

E6.7 Rate Regulations (Cont'd)

E6.7.1 Description and Application of Rates and Charges (Cont'd)

A. (Cont'd)

3. Nonrecurring Charges (Cont'd)

a. Installation of New Service (Cont'd)

(3) ***BellSouth SWA*** Common Transport (T)

The installation charge, as set forth in E6.8.1 following, for ***BellSouth SWA*** Common Transport is applicable on a first and additional line or trunk basis. If an IC places an Access Service Request (ASR) for multiple lines to the same end office for multiple trunks on a common Trunk group with the same premises interface code, the first line or trunk on the ASR is assessed the "First" installation charge and each additional line or trunk is assessed the "Additional" installation charge. Services requested on multiple ASRs will be treated as one request when requirements, as specified in E6.1.7 are met, and will receive "First" and "Additional" treatment. (T)

b. Installation of Optional Features (T)

If a separate nonrecurring charge applies for the installation of an optional feature and BSE available with ***BellSouth SWA*** service, the charge applies whether the feature or BSE is installed coincident with the initial installation of service or at any time subsequent to the initial installation of service. (T)

For optional features and BSEs for which no separate installation charge is applicable, the optional feature may be installed coincident with the installation of new ***BellSouth SWA*** service at no additional charge to the IC. Any additions and/or changes in optional features and BSEs (excluding disconnection of optional features and BSEs) subsequent to the installation of new service will be provided as service rearrangements as set forth in c. following.

E6. BELLSOUTH SWA SERVICE (T)

E6.7 Rate Regulations (Cont'd)

E6.7.1 Description and Application of Rates and Charges (Cont'd)

A. (Cont'd)

3. Nonrecurring Charges (Cont'd)

c. Service Rearrangements

Service rearrangements are changes to existing services which do not result in either a change in the minimum period requirement as set forth in E5.2.5 preceding or a change in the physical location of the point of termination at the IC's premises or the IC's end user's premises. Changes which result in the establishment of new minimum period obligations are treated as discontinuance of service and establishment of new service. Changes in the physical location of the point of termination are treated as moves and are described and charged for as set forth in E6.7.7 following.

A change which results from a transfer of service, as set forth in E2.1.2 preceding, is described in d. following and charged as set forth in E6.8.9 following.

Nonrecurring charges for service rearrangements apply to those additions, changes or rearrangements (excluding disconnection of optional features and BSEs) made subsequent to the installation of new service.

The charge to the IC for the service rearrangement is dependent on whether the change is administrative only in nature or involves an actual physical change to the service. When actual physical work is required to rearrange the service, the charge to the IC is dependent upon where the work is performed to accomplish the requested change. The applicable charges for service rearrangements are charged on a transmission path, end office and/or end office and tandem level as specified in E6.8 following.

Administrative changes as identified following, will be made without charge(s) to the IC. Such changes require the continued provision and billing of the Access Service to the same entity (i.e., IC remains responsible for all outstanding indebtedness for the Access Service). Administrative changes are as follows:

- Change of IC name, (i.e., the IC of record does not change but rather the IC of record changes its name--e.g., AT&T-Long Lines to AT&T Communications)
- Change of IC or IC's end user premises address when the change of address is not a result of a physical relocation of equipment,
- Change in billing data (name, address, or contact name or telephone number. The IC of record does not change.)
- Change of IC circuit identification,
- Change of billing account number,
- Change of IC test contact number,
- Change of IC or IC's end user contact name or telephone number, and
- Change of jurisdiction

When the ***BellSouth SWA*** CCSAC option is elected, the IC may add Calling Party Number (CPN), Charge Number (CN)/Billing Number and Carrier Selection Parameter (CSP) at no additional charge if these features are specified at the time the ***BellSouth SWA*** CCSAC option is ordered for existing ***BellSouth SWA*** trunks. (T)

E6. BELLSOUTH SWA SERVICE

E6.7 Rate Regulations (Cont'd)

E6.7.1 Description and Application of Rates and Charges (Cont'd)

A. (Cont'd)

3. Nonrecurring Charges (Cont'd)

c. Service Rearrangements (Cont'd)

When the 64 CCC option is elected to upgrade an existing BellSouth SWA FGD or BellSouth SWA TSBSA 3 trunk equipped with BellSouth SWA CCSAC, the rearrangement charge as specified in E6.8.8.E. shall apply.

When the 64 CCC option is elected, the IC may select Access Transport Parameter (ATP) option at no additional charge if this feature is specified at the time the 64 CCC option is ordered for existing switched access trunks.

If the change involves the addition of BellSouth® Remote Access Service ports, nonrecurring charges as set forth in E6.8.3.A.4. following will apply for the installation of the additional ports as well as appropriate BellSouth® SWA LSBSA installation nonrecurring charges. (N)

All other service rearrangements will be charged for as follows:

- If the change involves the addition of an optional feature or BSE which has a separate nonrecurring charge, that nonrecurring charge will apply. (The addition of Local Switching Optional Features or BSEs during conversion from BellSouth SWA FG service to BellSouth SWA LSBSA or BellSouth SWA TSBSA service will also incur the applicable nonrecurring charges.)

® BellSouth is a registered trademark of BellSouth Intellectual Property Corporation

E6. BELLSOUTH SWA SERVICE

E6.7 Rate Regulations (Cont'd)

E6.7.1 Description and Application of Rates and Charges (Cont'd)

A. (Cont'd)

3. Nonrecurring Charges (Cont'd)

c. Service Rearrangements (Cont'd)

- With the exception of BellSouth SWA FGD, services converted from Multifrequency (MF) to BellSouth SWA Common Channel Signaling Access Capability (CCSAC), if the change involves rearrangement of an IC's existing lines and/or trunk groups, the addition and/or modification of an optional feature which does not have a separate nonrecurring charge, and/or other rearrangements that are accomplished via software translations changes such as those made in the common block of the switch (e.g., adding and/or changing carrier codes), nonrecurring charges for service rearrangements will apply ***and/or adding point codes associated with BellSouth CCS7 Access Arrangement Service.*** A common charge is assessed for all changes submitted on the same ASR. Services requested on multiple ASRs will be treated as one request when requirements, as specified in E6.1.7, are met. The nonrecurring charges for service rearrangements are as specified in E6.8.8 following. (C)

- If the change involves rearrangement of an IC's existing BellSouth SWA FGD or BellSouth SWA TSBSA 3 service from direct routed to tandem routed trunks, no charge shall apply for the IC requested rearrangement as long as the following conditions are met:

Access tandem routed access was not available to the end office at the time the end office was converted to an equal access office,

The IC was providing service in the access tandem serving area prior to the availability of access tandem routed access, and

The IC requests the rearrangement of its trunks from direct routed access to access tandem routed access within six months of the first availability of access tandem routed access in that area.

When an optional feature or BSE is not required on each transmission path, but rather for an entire transmission path group, an end office or an access tandem switch, only one such charge will apply (i.e., it will not apply per transmission path). For example, if the requested option or change is common to more than one trunk, and the work required will be performed in the common block of the switch, the charge specified in E6.8.8.D. following will be multiplied by the total number of Company central offices (access tandem and end offices) involved.

ICs will be exempt from nonrecurring charges for Service Rearrangements prompted by Local Transport Restructure until December 31, 1994, for replacement of tandem routed trunks with direct end office routed trunks or for replacement of direct end office routed trunks with tandem routed trunks and to rollovers and grooming of existing BellSouth SWA services, but shall not include BellSouth SWA services which ride special access (a.k.a. BellSouth SPA) services. In addition, the waiver is limited to one change for a given switched access trunk, trunk group or facility during the waiver period. In order for nonrecurring charges for Service Rearrangements to be waived, all ASRs must be placed by December 31, 1994 with due dates of no later than December 31, 1995, and the IC must maintain the same point of presence (POP) location. Additionally, the following conditions must be met to receive an exemption:

For tandem to direct and direct to tandem trunk rearrangements, the following additional requirements must be met:

- It is the responsibility of the IC to provide all related purchase order numbers pertaining to the connect ASR on the disconnect ASR.

E6. BELLSOUTH SWA SERVICE (T)

E6.7 Rate Regulations (Cont'd)

E6.7.1 Description and Application of Rates and Charges (Cont'd)

A. (Cont'd)

3. Nonrecurring Charges (Cont'd)

c. Service Rearrangements (Cont'd)

- The connect ASR and the disconnect ASR must be placed at the same time.
- If the number of installed trunks exceed the number of trunks to be disconnected the customer must provide, at the time the ASRs are placed, justification based upon standard engineering methods.

For service rearrangements other than access tandem to direct and direct to tandem trunk rearrangements, the following additional requirements must be met:

- When multiple ASRs are required, the ASRs must be submitted at the same time and the IC must provide related purchase order numbers pertaining to the multiple ASRs.

d. Notwithstanding the provisions of c. preceding, if a customer has submitted to the Company, by December 31, 1994, a letter indicating its intent to submit ASRs for the purpose of accomplishing the rearrangements described in such section and specifying, at a minimum:

- Customer Name,
- Access Carrier Name Abbreviations (ACNAs),
- Carrier Identification Codes (CICs),
- Purchase Order Number (PON),
- Point of Presence (POP) Access Carrier Terminal Location (ACTL),
- Desired Interface Level at POP after Rearrangement,
- Target Completion Date for POP Rearrangement,
- Existing Quantities Involved in Rearrangement by Number of DS3s, Number of DS1s and Number of Trunks/Lines per POP/ACTL, and
- Expected Quantities Resulting by Number of DS3s, Number of DS1s and Number of Trunk/Lines per POP/ACTL, the waiver specified in c. preceding will apply for quantities indicated in such letter for each POP/ACTL indicated if:
- ASRs for such quantities are submitted no later than ninety days prior to the due date;
- the due dates of those ASRs are no later than December 31, 1995, and
- the rearrangements otherwise qualify for the waiver pursuant to the requirements of c. preceding.

If, due to technical limitations of the Company, an IC cannot combine its ***BellSouth SWA*** 500 service or ***BellSouth SWA*** 8***XX Toll Free Dialing*** Ten Digit Screening Service traffic with its ***BellSouth SWA*** FGD or ***BellSouth SWA*** TSBSA 3 service traffic, no charge shall apply to combine these trunk groups when it becomes technically possible. (T)

E6. BELLSOUTH SWA SERVICE

E6.7 Rate Regulations (Cont'd)

E6.7.1 Description and Application of Rates and Charges (Cont'd)

A. (Cont'd)

3. Nonrecurring Charges (Cont'd)

e. Transfer of Service

When a change in billing data (e.g., name, address, contact name, or telephone number) is requested in association with a change in the IC of record, transfer of service charges, as set forth in E6.8.9 following will apply. Charges are applied on a Billing Account Number (BAN) basis. In addition, there are separate charges for transfer of service work associated with switched access lines or trunks. These charges will be assessed on a per line basis for line side connections and/or on a per trunk basis for trunk side connections.

Transactions involving only subscription changes to the IC's end users' lines are not considered a transfer of service nor a service rearrangement. Subscription change charges are found in Section E13. following.

f. BellSouth SWA 500 Service

A nonrecurring charge, as specified in E6.8.13 following, applies to BellSouth SWA 500 service. A nonrecurring charge applies for the first 500 NXX code submitted on an Access Service Request (ASR) and is assessed per each Company End Office and Access Tandem in which translations are required to route BellSouth SWA 500 service calls to the IC. The additional charge applies for each additional 500 NXX code submitted on the same ASR and is assessed per each Company End Office and Access Tandem in which translations are required to route BellSouth SWA 500 service calls to the IC. In addition, rearrangement charges, as specified in E6.8.8 following, are applicable for rearrangements of the IC's existing trunk groups when the IC selects 0+ only or 1+ only 500 dialing capability over existing trunks and for subsequent changes in the dialing capability associated with BellSouth SWA 500 service.

g. BellSouth SWA 900 Service

A nonrecurring charge as specified in E6.8.3.E. following applies to the activation of 900 NXX codes to be routed to an IC in the operating territory of the Company. There are two nonrecurring charges. The first 900 NXX code nonrecurring charge applies for the first 900 NXX code submitted on an Access Service Request (ASR) and is assessed per each Company End Office and Access Tandem in which translations are required to route 900 NXX calls to the IC. The additional 900 NXX code nonrecurring charge applies for each additional 900 NXX code submitted on the same ASR and is assessed per each Company End Office and Access Tandem in which translations are required to route 900 NXX calls to the IC.

B. When the IC orders BellSouth SWA service associated with the resale of Private Line Service which is provided with the use of Special Access (a.k.a. BellSouth SPA***)*** service, the regulations set forth in E3.3.C. preceding and E7.4.2 following shall apply.

E6.7.2 Minimum Periods

Switched Access Service is provided for a minimum period of one month for BellSouth SWA FGA, BellSouth SWA FGB, BellSouth SWA FGC, BellSouth SWA LSBSA and BellSouth SWA TSBSA 1 and TSBSA 2 and three months for BellSouth SWA FGD and BellSouth SWA TSBSA 3***. BellSouth® Remote Access Service is provided for a minimum of twelve months.*** (C)

E6.7.3 Reserved for Future Use

® BellSouth is a registered trademark of BellSouth Intellectual Property Corporation

E6. BELLSOUTH SWA SERVICE (T)

E6.7 Rate Regulations (Cont'd)

E6. BELLSOUTH SWA SERVICE (T)

E6.7 Rate Regulations (Cont'd)

E6. BELLSOUTH SWA SERVICE (T)

E6.7 Rate Regulations (Cont'd)

E6. BELLSOUTH SWA SERVICE (T)

E6.7 Rate Regulations (Cont'd)

E6.7.4 Minimum Monthly Charge

A. ***BellSouth SWA*** service is subject to a minimum monthly charge. The minimum charge applies for the total capacity provided. (T)

B. The minimum monthly charge for the Local Switching and Information Surcharge rate elements is the sum of the charges as set forth in E6.8.3.A., and E6.8.6 following for the actual or assumed usage for the month. (T)

C. For Dedicated ***BellSouth SWA*** Transport rate elements that are billed a flat monthly rate, the charge is the monthly rate as set forth in E6.8.1 following.

E6.7.5 Reserved for Future Use

E6. BELLSOUTH SWA SERVICE (T)

E6.7 Rate Regulations (Cont'd)

E6.7.6 Change of Service Category Type[1]

A. Changes from one type of Service Category to another will be treated as a discontinuance of one type of service and a start of another. Nonrecurring charges will apply, with three exceptions.

1. When an IC upgrades a ***BellSouth SWA FG***A or ***BellSouth SWA FG***B service to a ***BellSouth SWA FG***D service, the nonrecurring charges will not apply if the following conditions are met: (T)

   a. The same IC premises is maintained, and

   b. The disconnections of ***BellSouth SWA*** FGA service and the start of ***BellSouth SWA*** FGD service are within the same LATA; or the disconnections of ***BellSouth SWA*** FGB service and the start of ***BellSouth SWA*** FGD service are within the same tandem subtending area. (T)

   c. In instances of ***BellSouth SWA*** FGA upgrades to ***BellSouth SWA*** FGD, to obtain credit for ***BellSouth SWA*** FGD nonrecurring charges, the IC must place an order for ***BellSouth SWA*** FGA disconnects within ninety days of conversion of the ***BellSouth SWA*** FGD end office to equal access. (T)

   d. In instances of ***BellSouth SWA*** FGB upgrades to ***BellSouth SWA*** FGD, whether installed at the tandem or converting end office, the ***BellSouth SWA*** FGB service disconnects must be placed within ninety days of completion of the ***BellSouth SWA*** FGD service order, with a disconnect due date of no more than thirty days from the placement of the disconnected ASR, in order to obtain credit for ***BellSouth SWA*** FGD nonrecurring charges. (T)

   e. In order to receive nonrecurring charge credit for the installation of ***BellSouth SWA*** FGD as outlined in a. thru d. preceding, it is the responsibility of the IC to provide all related purchase order numbers pertaining to the disconnection of ***BellSouth SWA*** FGA and/or ***BellSouth SWA*** FGB service and the installation of ***BellSouth SWA*** FGD service. Nonrecurring charges will apply for the ***BellSouth SWA*** FGD service when it is installed, however, credits for the ***BellSouth SWA*** FGD nonrecurring charges will be issued upon disconnect of the ***BellSouth SWA*** FGA or ***BellSouth SWA*** FGB service. This credit will be made on a line for trunk (***BellSouth SWA*** FGA to ***BellSouth SWA*** FGD) or trunk for trunk (***BellSouth SWA*** FGB to ***BellSouth SWA*** FGD) basis. Provisions of E2.4 preceding do not apply to these credits for nonrecurring charges. (T)

2. When a ***BellSouth SWA*** FGC service is upgraded to a ***BellSouth SWA*** FGD service, the nonrecurring charge will not apply. Because ***BellSouth SWA*** FGC is no longer available in an end office once the end office is equipped with equal access capabilities, (i.e., ***BellSouth SWA*** FGD). Such upgrades will be performed by the Company without the IC being required to place an order for the change. (T)

3. When an IC initially changes from an existing feature group service to the equivalent unbundled service (i.e., ***BellSouth SWA*** FGA to ***BellSouth SWA*** LSBSA, ***BellSouth SWA*** FGB to ***BellSouth SWA*** TSBSA 1, ***BellSouth SWA*** FGC to ***BellSouth SWA*** TSBSA 2, and ***BellSouth SWA*** FGD to ***BellSouth SWA*** TSBSA 3), the nonrecurring charge will not apply. (After the initial change of an IC's service from an existing feature group to a ***BellSouth SWA Basic Serving Arrangements***, all subsequent conversions of that service from ***BellSouth SWA Basic Serving Arrangements*** to feature groups and vice versa, will incur the applicable nonrecurring charges.) The addition of local switching optional features or BSEs, however, will incur the applicable nonrecurring charges. (T)

Note 1: References to ***BellSouth SWA FG***s include the corresponding BSA references. For example, reference of an upgrade from ***BellSouth SWA*** FGA to ***BellSouth SWA*** FGD, would include the corresponding ***BellSouth SWA Basic Serving Arrangements*** upgrade from ***BellSouth SWA*** LSBSA to ***BellSouth SWA*** TSBSA 3. (T)

E6. BELLSOUTH SWA SERVICE (T)

E6.7 Rate Regulations (Cont'd)

E6.7.6 Change of Service Category Type[1] (Cont'd)

A. (Cont'd)

3. (Cont'd)

a. Billing for IC's converting from feature group service categories to unbundled service categories prior to the end of the transition period will be handled as follows:

- For bill dates within the transition period, billing for the ***BellSouth SWA Basic Serving Arrangement*** will be effective on the IC's first bill date for that service subsequent to conversion. However, IC bills which contain billing for usage both prior to the tariff effective date and subsequent to the tariff effective date will result in a split bill. The usage prior to the effective date will be billed at the bundled feature group rates, and the usage on or after the effective date will be billed at the unbundled rates. IC bills which contain billing strictly for usage after the effective date of the Tariff will be billed entirely at unbundled ***BellSouth SWA Basic Serving Arrangement*** rates. (T) (T)

b. Billing for ICs whose service is converted from feature group service to unbundled ***BellSouth SWA Basic Serving Arrangement*** service at the end of the transition period will be handled as follows: (T)

- The billing for the ***BellSouth SWA Basic Serving Arrangement*** will be effective with the IC's first bill date for that service subsequent to conversion. All usage on the first bill subsequent to conversion will be billed at unbundled rates. (T)

B. When an IC upgrades a ***BellSouth SWA FG***A and/or ***BellSouth SWA FG***B service to ***BellSouth SWA FG***D service minimum period obligations will not change, (i.e., the time elapsed in the existing minimum period obligations will be credited to the minimum period obligations for ***BellSouth SWA FG***D service). When the effective dates for the disconnect and start of service are different, new minimum period obligations will be established for the ***BellSouth SWA*** FGD service. For all other changes from one type of Service Category to another, new minimum period obligations will also be established. (T)

Note 1: References to Feature Groups include the corresponding ***BellSouth SWA Basic Serving Arrangement*** references. For example, reference of an upgrade from ***BellSouth SWA*** FGA to FGD, would include the corresponding ***BellSouth SWA Basic Serving Arrangement*** upgrade from ***BellSouth SWA*** LSBSA to ***BellSouth SWA*** TSBSA 3.

E6. BELLSOUTH SWA SERVICE

E6.7 Rate Regulations (Cont'd)

E6.7.7 Moves

A. A move involves a change in the physical location of one of the following:

1. The point of interface at the IC terminal location or the IC's end user's premises.
2. The IC terminal location

B. The charges for the move are dependent on whether the move is to a new location within the same building or to a different building.

1. Moves Within the Same Building (Inside moves)

   When the move is to a new location within the same building, service rearrangement charges as set forth in E6.7.1 will apply. ***Access Collocation Cross-Connect nonrecurring and monthly recurring charges, contained in Section E13. of this Tariff, will also apply.*** There will be no change in the minimum period requirements. (C)

2. Moves to a Different Building

   Moves to a different building will be treated as a discontinuance and start of service and all associated nonrecurring charges will apply. ***Access Collocation Cross-Connect nonrecurring and monthly recurring charges, contained in Section E13. of this Tariff, will also apply.*** New minimum period requirements will be established for the new service. The IC will also remain responsible for satisfying all outstanding minimum period charges for the discontinued service. (C)

All BellSouth marks contained herein and as set forth in the trademarks and servicemarks section of this Tariff are owned by BellSouth Intellectual Property Corporation.

E6. BELLSOUTH SWA SERVICE (T)

E6.7 Rate Regulations (Cont'd)

E6.7.8 Measuring Access Minutes[1]

IC traffic to end offices will be measured (i.e., recorded or assumed) by the Company at end office switches or access tandem switches. Originating and terminating calls will be measured (i.e., recorded or assumed) by the Company to determine the basis for computing chargeable access minutes. For terminating calls over usage rates ***BellSouth SWA*** FGA and ***BellSouth SWA*** FGB, ***BellSouth SWA*** FGC to 800 and ***BellSouth SWA*** FGD, and for originating calls over usage rates ***BellSouth SWA*** MTS/***BellSouth SWA*** WATS-type ***BellSouth SWA*** FGA and ***BellSouth SWA*** FGB and ***BellSouth SWA*** FGD, the measured minutes are the chargeable access minutes. For originating calls over usage rates FX/ONAL ***BellSouth SWA*** FGA and ***BellSouth SWA*** FGC, chargeable originating access minutes are derived from recorded minutes in the following manner. (T)

Step 1: (T)
Obtain recorded originating minutes and messages (measured as set forth in A. and C. following for FX/ONAL ***BellSouth SWA*** FGA and ***BellSouth SWA*** FGC respectively) from the appropriate recording data.

Step 2:
Obtain the total attempts by dividing the originating measured messages by the completion ratio. Completion ratios (CR) are obtained separately for the major call categories such as DDD, operator, 500, 800, 900, from a sample study which analyzes the ultimate completion status of the total attempts which receive acknowledgement from the customer. That is, Measured Messages divided by Completion Ratio equals Total Attempts.

Step 3:
Obtain the total non-conversation time additive (NCTA) by multiplying the total attempts (obtained in Step 2) by the NCTA per attempt ratio. The NCTA per attempt ratio is obtained from the sample study identified in Step 2 by measuring the non-conversation time associated with both completed and incompleted attempts. The total NCTA is the time on a completed attempt from IC acknowledgment of receipt of call to called party answer (set up and ringing) plus the time on an incompleted attempt from IC acknowledgment of call until the access tandem or end office receives a disconnect signal (ring - no answer, busy or network blockage). That is, Total Attempts times Non-Conversation Time per Attempt Ratio equals Total NCTA.

Step 4:
Obtain total chargeable originating access minutes by adding the total NCTA (obtained in Step 3) to the recorded originating measured minutes (obtained in Step 1). That is Measured Minutes plus NCTA equals Chargeable Originating Access Minutes.

Following is an example which illustrates how the chargeable originating access minutes are derived from the measured originating minutes using this formula. (T)

A. ***BellSouth SWA FG***A Usage Measurement

1. Total Attempts = 1,000 (M. Mess.) .75 (CR) = 1,333.33
2. Total NCTA = .4(NCTA Per Attempt) x 1,333.33 = 533.33
3. Total Chargeable Originating Access Minutes = 7,000(M. Min.) + 533.33(NCTA) = 7,533.33

Measured Minutes (M. Min.) = 7,000
Measured Message (M. Mes.) = 1,000
Completion Ratio (CR) = .75
NCTA Per Attempt = .4 (T)

When assumed minutes are used, the assumed minutes are the chargeable access minutes.

Usage rated ***BellSouth SWA*** FGA access minutes or fractions thereof, the exact value of the fraction being a function of the switch technology where the measurement is made, are accumulated over the billing period for each line or hunt group, and are then rounded up to the nearest access minute for each line or hunt group. Usage rated ***BellSouth SWA*** FGB, and ***BellSouth SWA*** FGC and ***BellSouth SWA*** FGD access minutes or fractions thereof, the exact value of the fraction being a function of the switch technology where the measurement is made, are accumulated over the billing period for each end office, and are then rounded up to the nearest access minute for each end office. (T)

Note 1: Except where indicated herein, references to feature groups will also include the applicable Basic Serving Arrangement (***BellSouth SWA Basic Serving Arrangement***) as detailed in the martrix of E6.1.3.A. (e.g., the term ***BellSouth SWA*** FGA represents both ***BellSouth SWA*** FGA and Line Side Basic Service Arrangement (***BellSouth SWA*** LSBSA)).

E6. BELLSOUTH SWA SERVICE (T)

E6.7 Rate Regulations (Cont'd)

E6.7.8 Measuring Access Minutes [1] (Cont'd)

A. ***BellSouth SWA FG***A Usage Measurement (Cont'd) (T)

Assumed minutes are used for ***BellSouth SWA*** FGA FX/ONAL , ***BellSouth SWA*** FGA and ***BellSouth SWA*** FGB services which originate or terminate in end offices not equipped with measurement capabilities. (T)

The assumed average intrastate access minutes for FX/ONAL ***BellSouth SWA*** FGA are as set forth following unless the IC is reselling the FX/ONAL ***BellSouth SWA*** FGA to form a ***BellSouth SWA*** MTS/***BellSouth SWA*** WATS equivalent service. When the FX/ONAL ***BellSouth SWA*** FGA is being resold, the assumed average intrastate minutes are 9000 access minutes. (T)

When a FX/ONAL ***BellSouth SWA FG***A not used for resale is provided where neither the originating access minutes nor the terminating access minutes are measured, the assumed average intrastate access minutes are 1540 minutes. When originating only ***BellSouth SWA*** service is provided where the originating access minutes are not measured, the originating assumed average intrastate access minutes will apply. When terminating only ***BellSouth SWA*** service is provided where the terminating access minutes are not measured, the terminating assumed average intrastate access minutes are 1540 minutes and no originating access minutes will apply. (T)

When a two-way FX/ONAL ***BellSouth SWA*** FGA not used for resale is provided where the terminating access minutes are measured but the originating access minutes are not measured, the assumed average originating access minutes are 815 originating minutes of use for each such FX/ONAL ***BellSouth SWA*** FGA provided. (T)

When a two-way FX/ONAL ***BellSouth SWA*** FGA not used for resale is provided where the originating access minutes are measured but the terminating access minutes are not measured, the assumed average terminating access minutes are 725 terminating minutes of use for each such FX/ONAL ***BellSouth SWA*** FGA provided. (T)

The assumed average intrastate access minutes for ***BellSouth SWA*** MTS/***BellSouth SWA*** WATS-type ***BellSouth SWA*** FGA and ***BellSouth SWA*** FGB are 9000 access minutes. (T)

Note 1: Except where indicated herein, references to feature groups will also include the applicable Basic Serving Arrangement (***BellSouth SWA Basic Serving Arrangement***) as detailed in the martrix of E6.1.3.A. (e.g., the term ***BellSouth SWA*** FGA represents both ***BellSouth SWA*** FGA and Line Side Basic Service Arrangement (***BellSouth SWA*** LSBSA)). (T)

E6. BELLSOUTH SWA SERVICE (T)

E6.7 Rate Regulations (Cont'd)

E6.7.8 Measuring Access Minutes[1] (Cont'd)

A. ***BellSouth SWA FG***A Usage Measurement (Cont'd) (T)

For originating calls over ***BellSouth SWA*** FGA, usage measurement begins when the originating ***BellSouth SWA*** FGA entry switch receives an off-hook supervisory signal forwarded from the IC terminal location. (Where ***BellSouth SWA*** FGA is used for ***BellSouth SWA*** MTS/***BellSouth SWA*** WATS-type services, this off-hook signal is generally forwarded by the IC's equipment when the called party answers.) (T)

The measurement of originating call usage over ***BellSouth SWA*** FGA ends when the originating***BellSouth SWA*** FGA entry switch receives an on-hook supervisory signal from either the originating end user's end office, indicating the originating end user has disconnected, or the IC terminal location, whichever is recognized first by the entry switch. (T)

For terminating calls over ***BellSouth SWA*** FGA, usage measurement begins when the terminating ***BellSouth SWA*** FGA entry switch receives an off-hook supervisory signal from the terminating end user's end office, indicating the terminating end user has answered. The measurement of terminating call usage over ***BellSouth SWA*** FGA ends when the terminating ***BellSouth SWA*** FGA entry switch receives an on-hook supervisory signal from either the terminating end user's end office, indicating the terminating end user has disconnected, or the IC's terminal location, whichever is recognized first by the entry switch. (T) (T)

B. ***BellSouth SWA FG***B Usage Measurement (T)

For originating calls over ***BellSouth SWA*** FGB, usage measurement begins when the originating ***BellSouth SWA*** FGB entry switch receives answer supervision forwarded from the IC terminal location, indicating the IC's equipment has answered. (T)

The measurement of originating call usage over ***BellSouth SWA*** FGB ends when the originating ***BellSouth SWA*** FGB entry switch receives disconnect supervision from either the originating end user's end office, indicating the originating end user has disconnected, or the IC's terminal location, whichever is recognized first by the entry switch. (T)

For terminating calls over ***BellSouth SWA*** FGB, usage measurement begins when the terminating ***BellSouth SWA*** FGB entry switch receives answer supervision from the terminating end user's end office, indicating the terminating end user has answered. (T)

The measurement of terminating call usage over ***BellSouth SWA*** FGB ends when ther terminating ***BellSouth SWA*** FGB entry switch receives disconnect supervision from either the terminating end user's end office, indicating the terminating end user has disconnected, or the IC's terminal location, whichever is recognized first by the entry switch. (T)

C. ***BellSouth SWA FG***C Usage Measurement (T)

For originating calls over ***BellSouth SWA*** FGC, usage measurement begins when the originating ***BellSouth SWA*** FGC entry switch receives answer supervision from the IC's terminal location, indicating the called party has answered. (T)

The measurement of originating call usage over ***BellSouth SWA*** FGC ends when the originating ***BellSouth SWA*** FGC entry switch receives disconnect supervision from either the orginating end user's end office, indicating the originating end user has disconnected, or the IC's terminal location, whichever is recognized first by the entry switch. (T)

For terminating calls over ***BellSouth SWA*** FGC to services other than 500, 800 or 900, terminating ***BellSouth SWA*** FGC usage is not directly measured at the terminating entry switch, but is imputed from originating usage, excluding usage from calls to ***BellSouth SWA*** 500, ***BellSouth SWA*** 8***XX Toll Free Dialing Ten Digit Screening*** service or ***BellSouth SWA*** 900 services. Actual measured usage will be used where available rather than an imputed value. (T)

For terminating calls over ***BellSouth SWA*** FGC to ***BellSouth SWA*** 500 or ***BellSouth SWA*** 500, ***BellSouth SWA*** 8***XX Toll Free Dialing Ten Digit Screening*** service, usasge measurement begins when the terminating ***BellSouth SWA*** FGC entry switch receives answer supervision from the terminating end user's end office, indicating the terminating ***BellSouth SWA*** 500 or ***BellSouth SWA*** 8***XX Toll Free Dialing Ten Digit Screening*** service end user has answered. (T)

The measurement of terminating call usage over ***BellSouth SWA*** FGC to ***BellSouth SWA*** 8***XX Toll Free Dialing Ten Digit Screening*** service ends when the terminating ***BellSouth SWA*** FGC entry switch receives an on-hook supervisory signal from the terminating end user's end office, indicating the terminating ***BellSouth SWA*** 500 or ***BellSouth SWA*** 8***XX Toll Free Dialing Ten Digit Screening*** service end user has disconnected, or from the IC's terminal location, whichever is recognized first by the entry switch. (T)

Note 1: Except where indicated herein, references to feature groups will also include the applicable Basic Serving Arrangement (***BellSouth SWA Basic Serving Arrangement***) as detailed in the martrix of E6.1.3.A. (e.g., the term ***BellSouth SWA*** FGA represents both ***BellSouth SWA*** FGA and Line Side Basic Service Arrangement (***BellSouth SWA*** LSBSA)).

E6. BELLSOUTH SWA SERVICE (T)

E6.7 Rate Regulations (Cont'd)

E6.7.8 Measuring Access Minutes[1] (Cont'd)

D. ***BellSouth SWA FG***D Usage Measurement (T)

For originating calls over ***BellSouth SWA*** FGD, usage measurement begins when the originating ***BellSouth SWA*** FGD entry switch receives the first wink supervisory signal forwarded from the IC's terminal location.

The measurement of originating call usage over ***BellSouth SWA*** FGD ends when the originating ***BellSouth SWA*** FGD entry switch receives disconnect supervision from either the originating end user's end office, indicating the originating end user has disconnected, or the IC's terminal location, whichever is recognized first by the entry switch. (T)

For terminating calls over ***BellSouth SWA*** FGD, the measurement of access minutes begins when the terminating ***BellSouth SWA*** FGD entry switch receives answer supervision from the terminating end user's end office, indicating the terminating end user has answered. (T)

The measurement of terminating call usage over ***BellSouth SWA*** FGD ends when the terminating ***BellSouth SWA*** FGD entry switch receives disconnect supervision from either the terminating end user's end office, indicating the terminating end user has disconnected, or the IC's terminal location, whichever is recognized first by the entry switch. (T)

E6.7.9 Network Blocking Charge for BellSouth SWA FGD and BellSouth SWA TSBSA 3 (T)

The IC will be notified by the Company to increase its capacity (quantities of trunks) when excessive trunk group blocking occurs on groups carrying ***BellSouth SWA FG***D and ***BellSouth SWA*** TSBSA 3 traffic. Excessive trunk group blocking occurs when the blocking thresholds as stated in E6.5.7 preceding are exceeded. If the order for sufficient additional capacity to handle the IC's traffic has not been received by the Company within fifteen days of the notification, the Company will bill the IC, at the rate set forth in E6.8.1.C. following, for each overflow in excess of the chargeable threshold. (T)

Chargeable Thresholds

For Trunk Groups as Specified in E6.5.7.A.4.a.

Trunk Group Size	Allowable Overflows Per Trunk Per Month
1-2	18
3-4	19
5-6	13
7-40	10
41-139	9
140-500	8
501 or greater	7

For Trunk Groups as Specified in E6.5.7.A.4.b.

Trunk Group Size	Allowable Overflows Per Trunk Per Month
1-4	10
5-6	8
7-125	6
126 or greater	5

Note 1: Except where indicated herein, references to feature groups will also include the applicable Basic Serving Arrangement (***BellSouth SWA Basic Serving Arrangement***) as detailed in the martrix of E6.1.3.A. (e.g., the term ***BellSouth SWA*** FGA represents both ***BellSouth SWA*** FGA and Line Side Basic Service Arrangement (***BellSouth SWA*** LSBSA)). (T)

E6. BELLSOUTH SWA SERVICE (T)

E6.7 Rate Regulations (Cont'd)

E6.7.10 Application of Rates for BellSouth SWA FGA and BellSouth SWA LSBSA Extension Service (T)

BellSouth SWA FGA and ***BellSouth SW***A LSBSA service is available with extensions, i.e., additional terminations of the service at different building(s) in the same LATA or, by access to an IC's facilities, additional terminations of the service at different building(s) in a different LATA. ***BellSouth SWA*** FGA and ***BellSouth SWA*** LSBSA extensions within the LATA are provided and charged for under the Company's General Subscriber Service Tariff. ***BellSouth SWA*** FGA and ***BellSouth SWA*** LSBSA extensions provided through an IC's facilities to different LATAs are charged for as Special Access ***(a.k.a. BellSouth SPA)*** service in both the LATA where the extension originates and the LATA where the extension terminates. The rate elements which apply in each LATA to access the IC's facilities are: a Voice Grade Access Connection, Special Access Line, Special Transport, if applicable, and Signalling Capability (optional features and functions), if applicable. All appropriate monthly rates and nonrecurring charges set forth in E7.5 following will apply. (T)

E6. BELLSOUTH SWA SERVICE (T)

E6.7 Rate Regulations (Cont'd)

E6.7.11 Message Unit Credit

Calls from end users to the seven digit local telephone numbers associated with ***BellSouth SWA FG***A and ***BellSouth SWA*** LSBSA service are subject to Company General Subscriber Service Tariff charges (including message unit and toll charges as applicable), as well as any other applicable charges for access services. The monthly bills rendered to ICs for their ***BellSouth SWA FG***A and ***BellSouth SWA*** LSBSA service will include a credit to reflect any message unit charges collected from their end users under the Company's General Subscriber Service Tariff. (T)

E6. BELLSOUTH SWA SERVICE

E6.7 Rate Regulations (Cont'd)

E6.7.12 Local Information Delivery Services

Calls over BellSouth SWA in the terminating direction to certain community information services will be rated under the applicable rates for BellSouth SWA service as set forth in E6.8 following. In addition, the charges per call as specified under the Company's General Subscriber Service Tariff will also apply.

E6.7.13 Mileage Measurement

A. The mileage to be used to determine the monthly rate for the BellSouth SWA Transport is calculated on the airline distance using the method as set forth in NECA No. 4 for wire center information (V&H Coordinates).

B. To determine the rate to be billed, first compute the mileage using the V&H coordinates method, for the points involved, then apply the per mile rate shown. If the calculation results in a fraction of a mile, always round up to the next whole mile before determining the mileage band applying the rates.

C. Exceptions to the mileage measurement rules are as follows:

For BellSouth SWA Dedicated Transport, mileage will be calculated between IC designated points, i.e., (1) IC's serving wire center (SWC) and IC designated Company end office, (2) SWC and an Access Tandem, (3) SWC to a Company Facility Hub (Hub), (4) a Hub and an Access Tandem, (5) a Hub to an end office, and (6) a Hub to a Hub.

Common Transport mileage will be measured from the Access Tandem to the end office. (C)

(DELETED) (D)

1. BellSouth SWA FGA and BellSouth SWA LSBSA service will be provisioned with a Switched Local Channel from the IC's premises to the IC's serving wire center.

   BellSouth SWA FGA and BellSouth SWA LSBSA service will be provisioned as BellSouth SWA Dedicated Transport from the selected end office (dial tone office) to the IC's serving wire center.

   BellSouth SWA FGA and BellSouth SWA LSBSA service, when used in the terminating direction, will be provisioned and billed as BellSouth SWA Common Transport, less the Access Tandem Switching charge, for traffic terminating within the LATA but beyond the selected end office (dial tone office) to the terminating end office.

   Mileage for BellSouth SWA FGA and BellSouth SWA LSBSA service will be calculated on an airline basis, using the V&H coordinates method. Mileage for BellSouth SWA FGA and BellSouth SWA LSBSA will be measured from the selected end office (dial tone office) to the IC's serving wire center as BellSouth SWA Dedicated Transport.

   Mileage for BellSouth SWA FGA and BellSouth SWA LSBSA traffic terminating within the LATA but beyond the selected end office (dial tone office), BellSouth SWA Common Transport will be measured from the selected end office (dial tone office) to the terminating end office.

E6. BELLSOUTH SWA SERVICE (T)

E6.7 Rate Regulations (Cont'd)

E6.7.13 Mileage Measurement (Cont'd)

C. Exceptions to the mileage measurement rules are as follows: (Cont'd)

2. When the Alternate Traffic Routing optional feature is provided with ***BellSouth SWA FG***s ***BellSouth SWA FG***B, ***BellSouth SWA FG***C, ***BellSouth SWA FG***D, and ***BellSouth SWA FG*** TSBSA to provide service from an end office to different IC terminal locations, ***BellSouth SWA*** Transport will be apportioned between the two transmission routes used to provide this feature. For ***BellSouth SWA FG***B, ***BellSouth SWA FG***C, ***BellSouth SWA*** TSBSA 1 and ***TSBSA*** 2, such apportionment will be made using standard Company traffic engineering methodology and will be based on the last trunk CCS desired for the high usage group, as described in E6.3.1 preceding. For ***BellSouth SWA FG***D and ***BellSouth SWA*** TSBSA 3, the apportionment will be based on the actual measured data which is recorded against the specific trunk group that carried a particular call. This apportionment will serve as the basis for the ***BellSouth SWA*** Transport mileage calculation. The IC will be billed accordingly. (T)

3. Where the end office is a remote system or module (RSS or RSM) ***BellSouth SWA*** Common and/or ***BellSouth SWA*** Dedicated Transport Mileage, as applicable will be calculated to the end office switch that serves as the host office for the (RSS or RSM) as if the host office were the end office. An additional mileage calculation will be made for a Switched Common Interoffice Channel between the host for the RSS or RSM and the RSS or RSM. (T)

E6. BELLSOUTH SWA SERVICE

E6.7 Rate Regulations (Cont'd)

E6.7.13 Mileage Measurement (Cont'd)

C. Exceptions to the mileage measurement rules are as follows: (Cont'd)

4. When terminating BellSouth SWA FGC and BellSouth SWA TSBSA service is provided from multiple IC terminal location to an end office not equipped with measurement capabilities the total BellSouth SWA Transport access minutes for that end office will be apportioned among the trunk groups accessing the end office on the basis of the individual capacity (i.e. trunks) ordered for each of those trunk groups. This apportionment will serve as the basis for BellSouth SWA Transport mileage calculation. The IC will be billed accordingly.

5. The BellSouth SWA Transport mileage for BellSouth SWA FGB, BellSouth SWA FGD, BellSouth SWA TSBSA 1 and 3 service provided to Mobile Telephone Serving Offices (MTSOs) interconnected to a Company access tandem office will be determined on airline basis, using the V&H coordinate method. The mileage measured will be that between the Company access tandem office serving the Mobile Telephone Service Office (MTSO) and the IC's serving wire center.

E6.7.14 Shared Use

A. Shared use occurs when BellSouth SWA and Special Access (a.k.a. BellSouth SPA) services are provided over the same high capacity facility through a common interface. Shared use facilities will be ordered, provisioned and billed in accordance with the regulations set forth in E5.2.7 preceding, and E6.7.19 and E7.4.8 following.

B. When the customer orders BellSouth Dedicated Ring, the facilities will be rated as BellSouth Dedicated Ring (i.e., Local Channel or Virtual Collocation Cross Connect, Interoffice Channel, as appropriate, and Channelization System and Central Office Channel Interface(s), if applicable) until such time as the customer chooses to use a portion of the available capacity for providing Special Access (a.k.a. BellSouth SPA) service. When individual channels are activated for Special Access (a.k.a. BellSouth SPA), the BellSouth Dedicated Ring Local Channel rates, Interoffice Channel rates, and Channelization System rates, if applicable, will be reduced via a reduction factor. The reduction factor will be developed using the net number of Special Access (a.k.a. BellSouth SPA) services provided over a BellSouth Dedicated Ring at the beginning of a monthly billing period.

C. Virtual Collocation Cross-Connects provide a means for customers to interconnect their virtual collocation arrangements to their BellSouth SWA DS1 and BellSouth SWA DS3 Local Channels, Interoffice Channels and Channelization equipment within the same ***C***entral ***O***ffice. ***Terms, conditions, and*** rates ***for Physical Access Collocation Cross-Connects and*** Virtual ***Access*** Collocation Cross-Connects are ***set forth*** in ***Section E13. of this Tariff.*** (C)

D. The capability exists for a customer to utilize all or part of a BellSouth Dedicated Ring to transport Special Access (a.k.a. BellSouth SPA) service provided the BellSouth Dedicated Ring channel interface transporting the Special Access (a.k.a. BellSouth SPA) does not have FlexServ service (a.k.a. BellSouth SPA Customer Reconfiguration) capability. The customer must place an order for each individual Special Access (a.k.a. BellSouth SPA) channel provided over BellSouth SWA Shared Use Facilities and specify the channel assignment for each such service. The Special Access (a.k.a. BellSouth SPA) traffic would enter and exit the BellSouth Dedicated Ring at Customer and Central Office Nodes on that network. When this occurs, ratcheting of BellSouth Dedicated Ring rate elements (i.e. Nodes, Channel Interfaces, Local Channels, Alternate Central Office Channels, Internodal Channels, or Interoffice Channels) will be based on the number of voice grade (BellSouth SWA DS0 VG) equivalent trunks/lines of that rate element used for Special Access (a.k.a. BellSouth SPA). Reduction factors will be developed to reduce the charges on system level billing as well as the billing on individual DS1, DS3, STS-1, OC-3, and/or OC-12 Channel Interfaces. For ratcheting purposes, the system level charges include Customer Nodes, Central Office Nodes, Local Channels, Alternate Central Office Channels, Internodal Channels, and Interoffice Channels as appropriate to make up a customer's BellSouth Dedicated Ring. Individual OC-1, OC-3 and OC-12 Channel Interfaces used in Overlay Ring Arrangements will be ratcheted as system level charges. The system reduction factor will apply to the system level charges. (T)

E. The system reduction factor will be derived by dividing the number of activated Special Access (a.k.a. BellSouth SPA) circuits by the voice grade (BellSouth SWA DS0 VG) channel equivalent capacity of the self-healing ring. An OC-1 BellSouth Dedicated Ring has 672 voice grade (BellSouth SWA DS0 VG) equivalent channels. A BellSouth Dedicated Ring has 2,016 voice grade (BellSouth SWA DS0 VG) equivalent channels. An OC-3+ or OC-12 BellSouth Dedicated Ring has 8,064 voice grade equivalent channels. An OC-48 BellSouth Dedicated Ring or OC-48+ BellSouth Dedicated Ring with 48 or less activated DS3s has 32,256 voice grade (BellSouth SWA DS0 VG) equivalent channels.

All BellSouth marks contained herein and as set forth in the trademarks and servicemarks section of this Tariff are owned by BellSouth Intellectual Property Corporation.

E6. BELLSOUTH SWA SERVICE

E6.7 Rate Regulations (Cont'd)

E6.7.14 Shared Use (Cont'd)

F. However, when an OC-48+ BellSouth Dedicated Ring is used to transport Special Access (a.k.a. BellSouth SPA), and more than 48 equivalent DS3s are activated on the service, the factor will be based upon the actual number of activated DS3s times 672 DS0s. A factor for individual DS3 channel interfaces and 28 DS1 channel systems, will be derived by dividing the number of activated Special Access (a.k.a. BellSouth SPA) circuits associated with the DS3 channel by the voice grade (BellSouth SWA DS0 VG) equivalent capacity of the DS3 channel. A DS3 has 672 voice grade (BellSouth SWA DS0 VG) equivalent channels. For DS1 channel interfaces, a factor is derived by dividing the number of Special Access (a.k.a. BellSouth SPA) circuits associated with the DS1 channel by the voice grade (BellSouth SWA DS0 VG) equivalent capacity of the DS1 channel, which is 24. Each reduction factor is rounded to four decimal places and then multiplied against the respective monthly charges to determine the reduction amount.

G. BellSouth Dedicated Ring rates and charges as set forth in E6.8.1 following will apply for each channel of the shared use facility that is used to provide BellSouth SWA service.

E6.7.15 Facility Hubs

A. An IC has the option of ordering digital high capacity facilities (i.e., DS1, or DS3) to a Facility Hub for channelizing to individual services requiring lower capacity facilities.

B. Different locations may be designed as Hubs for different facility capacities, e.g., channelization from digital to digital may occur at one location while channelization from digital to analog may occur at a different location. When ordering, the IC will specify the desired channelization Hub(s) selected from the NECA No. 4. This tariff identifies the type(s) of channelization functions, which are available, and the Company serving wire centers at which they are available. For additional information on Facility Hubs refer to E7.4.7 ***of this Tariff***. (T)

E6.7.16 (DELETED) (D)

E6.7.17 Reserved for Future Use

E6.7.18 Shared Network Arrangement

A. Shared Network Arrangement provides for multiple ICs to connect their individual services on channelized High Capacity Service. These service configurations will be limited to DS3 Service ICs sharing capacity with other sub-DS3 service ICs and/or DS1 Service ICs sharing capacity with other sub-DS1 ICs. Regulations for Shared Network Arrangements are described in E5.4 ***of this Tariff***. (T)

B. A one-time coordination charge will be assessed with the establishment of a Shared Network Arrangement. In addition to the coordination charge, a separate nonrecurring charge will apply to each service order on a shared network account. Applicable nonrecurring charges apply as set forth in E6.8.10 following.

E6.7.19 Information Surcharge

A. The Information Surcharge is a charge to recover those costs not directly associated with the provision of intrastate information. (i.e. directory white pages)

B. The Information Surcharge is assessed to the IC based on the IC's total number of access minutes. The rates are set forth in E6.8.6 following.

E6. BELLSOUTH SWA SERVICE

E6.7 Rate Regulations (Cont'd)

E6.7.20 Reserved for Future Use

E6.7.21 Reserved for Future use

E6.7.22 BellSouth® Remote Access Service

A. Rates and charges as specified in E6.8.3.A.4. following apply for BellSouth® Remote Access Service.

1. On or after October 23, 2002, BellSouth® Remote Access Service initial request to establish service provides a minimum capacity of 644 one-way ports per dial tone office. Customers in service prior to October 23, 2002 may continue their service with a minimum capacity of 276 one-way ports.
2. BellSouth® Remote Access Service subsequent request provides a capacity of 23 one-way ports per dial tone office (where capacity allows).

B. The customer is responsible for all interface support for clients and/or employees.

C. BellSouth® Remote Access Service, available with BellSouth® SWA LSBSA is provided from suitably equipped Telephone Company offices. These offices are identified in the NATIONAL EXCHANGE CARRIER ASSOCIATION (NECA) TARIFF F.C.C. NO. 4.

D. BellSouth® Remote Access Service, available with BellSouth® SWA LSBSA, is available on a one-to-one basis, i.e., one LSBSA, one BellSouth® Remote Access Service port.

E. Service intervals for BellSouth® Remote Access Service, available with BellSouth® SWA LSBSA, will be negotiated.

E6.7.23 Zone Pricing - BellSouth SWA Transport

BellSouth SWA Transport Service is organized into three pricing zones. Rate levels for Switched Local Channel, Switched Interoffice Channels and Channelization Systems will be billed in accordance with the pricing zone assignment of the IC's serving wire center. The pricing zone assignment for each Company serving wire center is specified in the National Exchange Carrier Association (NECA) Tariff F.C.C. No. 4.

Interoffice Channels, which terminate in offices in different zones, will carry the higher rate. When interoffice channels are provided by more than one Telephone Company, this Company's portion of the circuit will be billed at the zone rate of this Company's central office, and the other Telephone Company's portion of that circuit will be billed in accordance with that Company's tariff, pursuant to E2.4.8 preceding. Channelization rates will be determined by the location of the channelization arrangement.

E6.7.24 Reserved For Future Use

E6.7.25 BellSouth Dedicated Ring

A. Monthly rates and charges as specified in E6.8.1 following apply for each BellSouth Dedicated Ring. Customers must specify network capacity at the time of the initial order. In an Overlay Ring Arrangement where a customer's overlaying BellSouth Dedicated Ring rides the customer's host BellSouth Dedicated Ring, the overlay ring will share the transport of the host ring between common node locations. Rate categories at OC-3, OC-3+, OC-12, OC-48, OC-48+, ***OC-192*** and ***OC-192+*** capacity levels include Customer Nodes, Central Office Nodes, Local Channels, Alternate Central Office Channels, Interoffice Channels and Internodal Channels. Rate categories for OC-1 BellSouth Dedicated Ring include Customer Nodes and Central Office Nodes. Channel Interfaces are required at each node on the network and must be associated with a BellSouth Dedicated Ring. An OC-1 Overlay Ring Arrangement requires an OC-1 Channel Interface at each node involved. An OC-3 Overlay Ring Arrangement requires an OC-3 Channel Interface at each node involved. An OC-3+ or OC-12 Overlay Ring Arrangement requires an OC-12 Channel Interface at each node involved. ***An OC-48 or OC-48+ Overlay Ring Arrangement requires an OC-48 Channel Interface at each node involved.*** In Overlay Ring Arrangements, the customer must order a Channel Interface for each entry to or exit from the host ring. In all other situations, the number of Channel Interfaces ordered will depend on whether the customer desires a working interface, or a working interface and a protection interface. The quantity of channel interfaces ordered may not exceed the capacity ordered. When a 28 DS1 Channel System is utilized to activate DS1 channels, the appropriate number of DS1 Channel Interfaces are required in lieu of an originating or terminating DS3 or STS-1 Channel Interface. (C)

All BellSouth marks contained herein are owned by BellSouth Intellectual Property Corporation

E6. BELLSOUTH SWA SERVICE

E6.7 Rate Regulations (Cont'd)

E6.7.25 BellSouth Dedicated Ring (Cont'd)

B. Nonrecurring charges for Local, Alternate Central Office, Interoffice and Internodal Channels apply for each channel for month-to-month customers. Nonrecurring charges are not applicable when the ring level rate elements are ordered under TPP arrangements. (M)

C. BellSouth Dedicated Ring rate elements are defined as following: Local Channel, Interoffice Channel, Internodal Channel, Alternate Central Office Channel, Customer Node and Central Office Node. Nonrecurring charges do apply for the Channel Interface Reallocation rate element for TPP customers. When the customer requests two separate routes and the routing is provided as described in E6.2.11.A preceding, charges apply for the Local Channels and any Interoffice Channels on the requested route. Recurring charges for Local, Alternate Central Office, Interoffice and Internodal Channels apply for each quarter air mile increment of the channel. Fractions of a quarter mile will always round up to the next quarter air mile before determining the mileage and applying the rate. For channels which are less than one quarter mile, a minimum charge of one quarter mile applies. (M)

D. For Internodal Channels, charges apply as appropriate either for the same wire center area or contiguous serving wire center areas, as specified in E6.8.1. (M)

E. Nonrecurring charges for Customer Nodes and Central Office Nodes apply per node for month-to-month customers and are based upon the capacity of the ring configuration. Nonrecurring charges are not applicable when the preceding rate elements are ordered under TPP arrangements. Recurring rates for Customer and Central Office Nodes apply per node and are also based upon the capacity of the ring configuration. (M)

A. When the customer orders an OC-1 BellSouth Dedicated Ring Overlay Ring Arrangement riding the customer's host OC-12, OC-48, or OC-48+ BellSouth Dedicated Ring, recurring charges apply per OC-1 Customer Node and/or OC-1 Central Office Node, in addition to the recurring and nonrecurring charges for associated Channel Interfaces. (M)

E6. BELLSOUTH SWA SERVICE

E6.7 Rate Regulations (Cont'd)

E6.7.25 BellSouth Dedicated Ring (Cont'd)

G. When the customer orders an OC-3 BellSouth Dedicated Ring Overlay Ring Arrangement riding the customer's host OC-12, OC-48, OC-48+, ***OC-192,*** or ***OC-192+*** BellSouth Dedicated Ring, recurring charges apply per OC-3 Customer Node and/or OC-3 Central Office Node, in addition to the recurring and nonrecurring charges for associated Channel Interfaces. Nonrecurring charges only apply for month-to-month customers. (C)

H. When the customer orders an ***OC-3,*** OC-3+ or OC-12 Overlay Ring Arrangement riding the customer's host OC-48***, OC-48+, OC-192 or OC-192+*** BellSouth Dedicated Ring, recurring charges apply per OC-3+ and/or OC-12 Customer Node and/or per OC-3+ and/or OC-12 Central Office Node, in addition to the charges for associated Channel Interfaces. Nonrecurring charges only apply for month-to-month customers. (C)

I. In all Overlay Ring Arrangements, the number of OC-1, OC-3, OC-12 and/or ***OC-48*** Channel Interfaces required will be based upon the characteristics of the overlaying ring. (C)

J. The rates for Customer Channel Interfaces apply for each origination and for each termination of an activated DS1, DS3, STS-1, OC-3, OC-12, and/or ***OC-48*** at the Customer Node. Nonrecurring charges are established on a per order basis for the first DS1, DS3, STS-1, OC-3, OC-12, and/or ***OC-48*** which originates or terminates at a Customer Node and for each additional DS1, DS3, STS-1, OC-3, OC-12, and/or ***OC-48*** which originates or terminates at the same Customer Node. The recurring rate applies on a per Customer Node basis for each origination and for each termination of an activated ***interface*** at a Customer Node. (C)

K. In addition, OC-12 and or OC-48 customers with DS3 and/or STS-1 interfaces at the Customer Node electing to connect with DS1 services at a Central Office Node, must obtain a 28 DS1 Channel System and the appropriate number of DS1 Channel Interfaces in lieu of a DS3 or STS-1 Channel Interface. A maximum of 28 DS1 Channel Interfaces can be activated for each 28 DS1 Channel System utilized. Nonrecurring charges are established on a per order basis for the first 28 DS1 Channel System and for each additional 28 DS1 Channel System at that same Central Office Node. Nonrecurring charges are also established for the first DS1 Channel Interface which originates/terminates in a 28 DS1 Channel System and each additional DS1 Channel Interface which originates/terminates in that same DS1 Channel System. For DS1 Channel Systems, nonrecurring charges only apply for month-to-month customers. The recurring rate applies for each 28 DS1 Channel System and each DS1 Channel Interface activated per Central Office Node.

L. In order to accommodate more flexible customer situations, BellSouth Dedicated Ring is available under several TPP arrangements: Plan A (12-36 Months), Plan B (37-60 Months) or Plan C (61-96 Months). Month-to-month arrangements (with a minimum of four months) are available for BellSouth Dedicated Ring.

M. TPP arrangements are provided under the terms and conditions specified in E2.4.9 preceding, except as modified following. For all payment plans, the following regulations apply:

1. BellSouth Dedicated Ring, whether initially or subsequently ordered, in conjunction with SMARTRing® service (a.k.a. BellSouth SPA Dedicated Ring) must be provided under the same TPP payment plan with the same service period and both services are to be coterminous.

   All rate elements, for a given BellSouth Dedicated Ring, whether initially or subsequently ordered, must be provided under the same payment plan with the same service period and are coterminous upon disconnect of the BellSouth Dedicated Ring. However, Channel Interfaces, except those utilized to interface an overlaying ring with its host ring, may be provided under a month-to-month arrangement which is equal to or less than the payment plan for the associated BellSouth Dedicated Ring.

   In a shared network arrangement, where the host subscriber and the connecting service user subscribes to services under TPP arrangements, the payment periods for directly associated channelized rate elements must be equal to or less than the payment periods for the host service, or the service user must order those rate elements under month-to-month payment terms. Where the host subscriber receives services under month-to-month payment terms, a connecting user must also receive directly associated channelized rate elements under month-to-month payment terms.

All BellSouth marks contained herein are owned by BellSouth Intellectual Property Corporation

E6. BELLSOUTH SWA SERVICE

E6.7 Rate Regulations (Cont'd)

E6.7.25 BellSouth Dedicated Ring (Cont'd)

M. (Cont'd)

2. The rates applicable to a month-to-month payment plan are subject to Company initiated charges.
3. Termination liability charges for BellSouth Dedicated Ring TPP customers are applicable as specified in E2.4.9.C of this Tariff.
4. When a service period under a TPP arrangement is completed and a customer elects to revert to a month-to-month payment option, no minimum period is applicable.

   The TPP customer of record will have a 60 day grace period after which month-to-month rates will apply.
5. Customers may upgrade from a lower capacity BellSouth Dedicated Ring to a higher capacity BellSouth Dedicated Ring without incurring any termination charges if the following conditions are met:
   a. the order for the upgraded BellSouth Dedicated Ring and the order for the disconnect of the existing BellSouth Dedicated Ring are received by the Company at the same time,
   b. the new BellSouth Dedicated Ring is provided between the same customer and Central Office locations as the discontinued BellSouth Dedicated Ring,
   c. the number of Channel Interfaces activated under the new capacity BellSouth Dedicated Ring is greater than the number of Channel Interfaces activated under the existing capacity BellSouth Dedicated Ring.
   d. the expiration date of the new BellSouth Dedicated Ring payment plan is subsequent to the payment plan of the ring being discontinued.
6. Customers may also upgrade existing BellSouth Dedicated Ring to a new BellSouth Dedicated Ring of the same capacity without incurring a termination liability charge, if the customer is concurrently ordering a new capability which cannot be provisioned with the existing BellSouth Dedicated Ring and if the conditions set forth in 5. preceding are met.
7. BellSouth Dedicated Ring and the applicable rates will commence beginning with the date a customer orders service. However, where ordering and billing processes have not yet been converted to BellSouth Dedicated Ring, the customer must order any additional services to be provided under BellSouth Dedicated Ring as existing tariffed services and be billed under tariff rates which would apply for such services, with monthly billing adjustments made to such billing to assure application of the appropriate BellSouth Dedicated Ring rates.

E6.7.26 Reserved for Future Use

E6.7.27 (DELETED) (D)

E6.7.28 Channels For Use With BellSouth SWA Managed Shared Network Service

A. Rates and charges as specified in E6.8.1 following apply on a per DS3 Local Channel, DS1 or DS0 Interface and DS1 or DS0 Interoffice Channel basis, as applicable. The minimum service period for each BellSouth SWA Managed Shared Network Service rate element is four months. The rates and charges for Local Switching and Common Line are in addition to the BellSouth SWA Managed Shared Network Service rates and charges.

B. BellSouth SWA Managed Shared Network Service is available in the BellSouth Telecommunications, Inc. Tariff F.C.C. No. 1 under commitment plans as follows: Month-to-Month, Plan A (12 Months), or Plan B (60 Months). Month-to-Month rates are only available upon completion of a Plan A or Plan B commitment plan. Upon the completion of a Plan A or Plan B commitment period, the customer must establish a new commitment plan or billing will be changed to month-to-month. The rates in this Tariff for channels for use with BellSouth Managed Shared Ring service will be based on time period for the commitment plan established for the service in the BellSouth Telecommunications, Inc. Tariff F.C.C. No. 1.

C. The rates for channels for use with BellSouth SWA Managed Shared Network Service commitment plans are stabilized for the length of the plan selected for the service arrangement in the interstate tariff and are exempt from Telephone Company initiated increases, however, decreases will automatically flow through to the customer.

All BellSouth marks contained herein and as set forth in the trademarks and servicemarks section of this Tariff are owned by BellSouth Intellectual Property Corporation.

E6. BELLSOUTH SWA SERVICE

E6.8 Rates and Charges

E6.8.1 BellSouth SWA Transport

A. Switched Local Channel - Per Local Channel

1. BellSouth SWA VG

a. Two-Wire

(1) Per Local Channel

	Monthly Rate SEE CURRENT PRICE LIST		Nonrecurring Charge		
	Minimum	**Maximum**	**First**	**Additional**	**USOC**
(a) Zone 1	**$23.00**	**$31.00**	**$308.95**	**$119.49**	**TEFV2**
(b) Zone 2	**23.00**	**31.00**	**308.95**	**119.49**	**TEFV2**
(c) Zone 3	**23.00**	**31.00**	**308.95**	**119.49**	**TEFV2**

b. Four-Wire

(1) Per Local Channel

(a) Zone 1	**38.00**	**52.00**	**314.69**	**125.19**	**TEFV4**
(b) Zone 2	**38.00**	**52.00**	**314.69**	**125.19**	**TEFV4**
(c) Zone 3	**38.00**	**52.00**	**314.69**	**125.19**	**TEFV4**

2. BellSouth SWA DS1 Service

a. 1.544 Mbps

(1) Per Channel

(a) Zone 1	**112.00**	**152.00**	**866.97**	**486.83**	**TEFHG**
(b) Zone 2	**112.00**	**152.00**	**866.97**	**486.83**	**TEFHG**
(c) Zone 3	**112.00**	**151.00**	**866.97**	**486.83**	**TEFHG**

b. **(DELETED)** (D)

3. BellSouth SWA DS3 Service

a. 44.736 Mbps

(1) Per Channel

(a) Zone 1	**1,841.00**	**2,491.00**	**870.50**	**427.88**	**TEFHJ**
(b) Zone 2	**1,841.00**	**2,491.00**	**870.50**	**427.88**	**TEFHJ**
(c) Zone 3	**1,841.00**	**2,491.00**	**870.50**	**427.88**	**TEFHJ**

b. **(DELETED)** (D)

All BellSouth marks contained herein are owned by BellSouth Intellectual Property Corporation

E6. BELLSOUTH SWA SERVICE

E6.8 Rates and Charges (Cont'd)

E6.8.1 BellSouth SWA Transport (Cont'd)

A. BellSouth SWA Local Channel - Per Local Channel (Cont'd)

3. BellSouth SWA DS3 Service (Cont'd)

b. **(DELETED)** (D)

4. End-Office Based Private Network

a. Local Channel

(1) Each

	Monthly Rate SEE CURRENT PRICE LIST		Nonrecurring Charge		
	Minimum	**Maximum**	**First**	**Additional**	**USOC**
(a) Zone 1	**4.00**	**6.00**	**17.93**	**17.93**	**TEFHK**
(b) Zone 2	**4.00**	**6.00**	**17.93**	**17.93**	**TEFHK**
(c) Zone 3	**4.00**	**6.00**	**17.93**	**17.93**	**TEFHK**

B. Switched Interoffice Channel - BellSouth SWA Dedicated Transport

1. BellSouth SWA VG

	Facility Termination Monthly Rate		Monthly Rate Per Mile			
	SEE CURRENT PRICE LIST				Nonrecurring	
	Min.	**Max.**	**Min.**	**Max.**	**Charge**	**USOC**
(a) Zone 1	**$15.30**	**$23.30**	**$1.90**	**$2.60**	**$79.85**	**1L5NF**
(b) Zone 2	**15.30**	**23.30**	**1.90**	**2.60**	**79.85**	**1L5NF**
(c) Zone 3	**15.30**	**23.30**	**1.90**	**2.60**	**79.85**	**1L5NF**
2. BellSouth SWA DS0 - 56/64 Kbps						
(a) Zone 1	**33.00**	**45.00**	**3.00**	**5.00**	**24.01**	**1L5NK**
(b) Zone 2	**33.00**	**45.00**	**3.00**	**5.00**	**24.01**	**1L5NK**
(c) Zone 3	**33.00**	**45.00**	**3.00**	**5.00**	**24.01**	**1L5NK**
3. BellSouth SWA DS1 - 1.544 Mbps						
(a) Zone 1	**77.00**	**104.00**	**21.50**	**29.00**	**100.49**	**1L5NL**
(b) Zone 2	**77.00**	**104.00**	**21.50**	**29.00**	**100.49**	**1L5NL**
(c) Zone 3	**77.00**	**104.00**	**21.50**	**29.00**	**100.49**	**1L5NL**
4. BellSouth SWA DS3 - 44.736 Mbps						
(a) Zone 1	**1,310.00**	**1,773.00**	**185.00**	**285.00**	**67.19**	**1L5NM**
(b) Zone 2	**1,310.00**	**1,773.00**	**185.00**	**285.00**	**67.19**	**1L5NM**
(c) Zone 3	**1,310.00**	**1,773.00**	**185.00**	**285.00**	**67.19**	**1L5NM**

All BellSouth marks contained herein are owned by BellSouth Intellectual Property Corporation

E6. BELLSOUTH SWA SERVICE

E6.8 Rates and Charges (Cont'd)

E6.8.1 BellSouth SWA Transport (Cont'd)

C. Switched Interoffice Channel - BellSouth SWA Common Transport

1. Per Mile

	Rate Per Access Minute SEE CURRENT PRICE LIST Minimum	Maximum	USOC
(a) Zone 1	**$.00003**	**$.00005**	**NA**
(b) Zone 2	**.00003**	**.00005**	**NA**
(c) Zone 3	**.00003**	**.00005**	**NA**

2. Facilities Termination

(a) Zone 1	**.00031**	**.00041**	**NA**
(b) Zone 2	**.00031**	**.00041**	**NA**
(c) Zone 3	**.00031**	**.00041**	**NA**

3. BellSouth SWA Common Transport (N)

	Rate Per Access Minute		
(a) DS3 to DS1 Multiplexer Per Access Minute of Use	**$.000387**	**NA**	(N)

D. Access Tandem Switching

1. Premium

	Rate Per Access Minute	USOC
(a) Per Access Minute	**$.00074**	**NA**

2. Dedicated Tandem Trunk Port Service (N)

	Monthly Rate	USOC	
(a) Per dedicated DS0/VG trunk port rerquired	**$9.47**	**TDW0P**	(N)
(b) Per dedicated DS1 trunk port required	**139.98**	**TDW1P**	(N)

E. Interconnection

1. Per originating transport-provided access minute of use (C)

	Rate Per Access Minute	USOC	
(a) Premium	**$.000000**	**NA**	(T)

2. Per terminating transport-provided access minute of use (N)

(a) Premium	**.000000**	**NA**	(N)

3. Per originating non-transport provided access minute of use (N)

(a) Premium	**.000000**	**NA**	(N)

4. Per terminating non-transport provided access minute of use (N)

(a) Premium	**.000000**	**NA**	(N)

(M)

Material previously appearing on this page now appears on page(s) 49.2 of this section.

E6. BELLSOUTH SWA SERVICE

E6.8 Rates and Charges (Cont'd)

E6.8.1 BellSouth SWA Transport (Cont'd)

F. Installation of New Service

1. Line Side Service

		Nonrecurring Charge First	Nonrecurring Charge Additional	USOC
(a)	Per Line	**$150.00**	**$36.00**	**TPP++**
(b)	Per Inward Only BellSouth SWA LSBSA Line for DID Service	**150.00**	**36.00**	**TPP+1**
(c)	Per Two-way BellSouth SWA LSBSA Line for DID/DOD Service	**150.00**	**36.00**	**TPP+2**
(d)	Per BellSouth SWA LSBSA Line with Answer Supervision	**150.00**	**36.00**	**TPP+3**

2. Trunk Side Service

(a)	Per Trunk or Signaling Connection	**150.00**	**36.00**	**TPP++**

(M)

Material previously appearing on this page now appears on page(s) 50.1 of this section.

E6. BELLSOUTH SWA SERVICE (T)

E6.8 Rates and Charges (Cont'd)

E6.8.1 BellSouth SWA Transport (Cont'd) (T)

G. Network Blocking Charge[1]

1. Nonrecurring Charge

	Rate	USOC
(a) Per call blocked	**$.0080**	**NA**

H. Optional Features

1. Supervisory Signaling
   a. DX Supervisory Signaling arrangement
      Per Transmission Path[2]
   b. SF Supervisory Signaling arrangement
      Per Transmission Path[3]
   c. E&M Type I Supervisory Signaling arrangement
      Per Transmission Path[2]
   d. E&M Type II Supervisory Signaling arrangement
      Per Transmission Path[2]
   e. E&M Type III Supervisory Signaling arrangement
      Per Transmission Path[4]
   f. Tandem Supervisory Signaling arrangement
      Per Transmission Path[5]
2. IC specification of the receive transmission level at the first point of switching within a range acceptable to the Company
   - Per Transmission Path[6]
3. IC specification of Switched Transport Termination Four-wire termination in lieu of two-wire termination
   - Per Transmission Path[7]
4. AccuPulse® service Access Capability
   - Per Transmission Path Group arranged[8] (T)

Note 1: Applies to ***BellSouth SWA*** FGD and ***BellSouth SWA*** TSBSA 3.

Note 2: Available with Interface Groups 1 and 2.

Note 3: Available with Interface Groups 2, 6 and ***9.*** (T)

Note 4: Available with Interface Group 2 for ***BellSouth SWA*** FGC, ***BellSouth SWA*** FGD, ***BellSouth SWA*** TSBSA 2 and ***TSBSA*** 3. (T)

Note 5: Available with Interface Group 2 for ***BellSouth SWA*** FGA and ***BellSouth SWA*** LSBSA. (T)

Note 6: Available with Interface Groups 2, 6 and 9 for ***BellSouth SWA*** FGA, ***BellSouth SWA*** FGB, ***BellSouth SWA*** LSBSA and ***BellSouth SWA*** TSBSA 1. The range of transmission levels which may be specified is described in Technical Reference PUB TR-NPL-000334. (T)

Note 7: Available with ***BellSouth SWA*** FGB and ***BellSouth SWA*** TSBSA 1 with Type B Transmission Specifications. (T)

Note 8: Available with Interface Group 6 and 9 for ***BellSouth SWA*** FGD and ***BellSouth SWA*** TSBSA 3.

®Registered Service Mark of BellSouth Corporation

E6. BELLSOUTH SWA SERVICE

E6.8 Rates and Charges (Cont'd)

E6.8.1 BellSouth SWA Transport (Cont'd)

H. Optional Features (Cont'd)

5. Common Channel Signaling Access Capability
   - Per signaling connection arranged[1]

6. 64 Clear Channel Capability
   - Per Channelized BellSouth SWA DS1/1.544 Mbps

   BellSouth SWA High Capacity Channel Optioned as:

	Monthly Rate	Nonrecurring Charge Initial	Nonrecurring Charge Subsequent	USOC
(a) Superframe Format (SF)	$-	$-	$420.00	SATSF
(b) Extended Superframe Format (ESF)	-	-	420.00	SATES

7. Channelization - BellSouth SWA DS3
   a. BellSouth SWA DS3 to BellSouth SWA DS1
      (1) Per arrangement

	Monthly Rate SEE CURRENT PRICE LIST Minimum	Monthly Rate SEE CURRENT PRICE LIST Maximum	Nonrecurring Charge Initial	Nonrecurring Charge Subsequent	USOC	
(a) Zone 1	*$721.30*	$1,207.00	$145.45	$584.80	SATNS	
(b) Zone 2	*721.30*	1,207.00	145.45	584.80	SATNS	(C)(U)
(c) Zone 3	*721.30*	1,207.00	145.45	584.80	SATNS	(C)(U)

   b. Central Office Channel Interface (C)(U)
      (1) Per BellSouth SWA DS1

	Nonrecurring Charge	USOC
(a) Zone 1	$85.00	SATCO
(b) Zone 2	85.00	SATCO
(c) Zone 3	85.00	SATCO

8. Channelization[2] - BellSouth SWA DS1
   a. Channelization System BellSouth SWA DS1 to BellSouth SWA DS0 or Analog
      (1) Per System

	Monthly Rate	Nonrecurring Charge	USOC	
(a) Zone 1	*$149.93*	$135.00	SATN1	
(b) Zone 2	*149.93*	135.00	SATN1	(C)(U)
(c) Zone 3	*149.93*	135.00	SATN1	(C)(U)

(C)(U)

Note 1: Available with Interface Groups 6 and 9 for BellSouth SWA FGD and BellSouth SWA TSBSA 3.

Note 2: BellSouth SWA DS1 Channelization Equipment monthly rates and nonrecurring charges will not apply at the Company end office when directly integrated into a Company end office digital switching system.

E6. BELLSOUTH SWA SERVICE (T)

E6.8 Rates and Charges (Cont'd)

E6.8.1 BellSouth SWA Transport (Cont'd) (T)

H. Optional Features (Cont'd)

8. Channelization[1] - ***BellSouth SWA*** DS1 (Cont'd) (T)

b. Central Office Channel Interface - ***BellSouth SWA*** (T)

(1) Per Interface

	Monthly Rate SEE CURRENT PRICE LIST		Nonrecurring Charge		
	Minimum	**Maximum**	**First**	**Additional**	**USOC**
(a) Zone 1	**$-**	**$-**	**$-**	**$-**	**SATSA**
(b) Zone 2	-	-	-	-	**SATSA**
(c) Zone 3	-	-	-	-	**SATSA**

c. Central Office Channel Interface - ***BellSouth SWA*** CCSAC Links (T)

(1) Per Interface

(a) Zone 1	-	-	-	-	**SATCL**
(b) Zone 2	-	-	-	-	**SATCL**
(c) Zone 3	-	-	-	-	**SATCL**

9. Tandem Signaling

	Monthly Rate	Nonrecurring Charge		
		Initial	**Subsequent**	**USOC**
(a) Per Trunk[2]	**$-**	**$-**	**$18.00**	**CNDST**

Note 1: ***BellSouth SWA*** DS1 Channelization Equipment monthly rates and nonrecurring charges will not apply at the Company end office when directly integrated into a Company end office digital switching system. (T)

Note 2: This charge is in addition to the charge set forth in E6.8.8.A.

E6. BELLSOUTH SWA SERVICE (T)

E6.8 Rates and Charges (Cont'd)

E6.8.1 BellSouth SWA Transport (Cont'd) (T)

I. Dedicated Network Access Lines (DNALs)

1. DNAL Switched Local Channel for use with the BSEs - SMDI, BCLID, Make Busy/Night Transfer, and Queuing (Call Waiting1 Subelements Only), per Local Channel

		Monthly Rate	Nonrecurring Charge First Service Installed	Nonrecurring Charge Additional Service Installed	USOC
(a)	Two-wire	**$30.91**	**$308.95**	**$119.49**	**T6E2X**
(b)	Four-wire	**49.81**	**314.69**	**125.19**	**T6E4X**

2. DNAL Switched Local Channel for use with the BSE - Queuing (Music After Delay Announcement Subelements Only), per Local Channel

(a)	200 - 3500 Hz	**37.10**	**345.89**	**135.65**	**T6ECS**
(b)	100 - 5000 Hz	**49.25**	**380.73**	**169.79**	**T6ECS**
(c)	50 - 8000 Hz	**49.66**	**406.23**	**176.70**	**T6ECS**

3. DNAL Switched Interoffice Channel

a. For use with the BSEs - SMDI, BCLID, Make Busy/Night Transfer, and Queuing (Call Waiting Subelements Only)

(1) **Mileage Bands**

		Nonrecurring Charge	Rates Fixed	Rates Per Mile	USOC
(a)	0	**$-**	**$-**	**$-**	**1L5XX**
(b)	Over 0 to 4	**79.85**	**4.96**	**3.09**	**1L5XX**
(c)	Over 4 to 8	**79.85**	**6.67**	**3.09**	**1L5XX**
(d)	Over 8 to 25	**79.85**	**8.35**	**3.09**	**1L5XX**
(e)	Over 25 to 50	**79.85**	**10.05**	**3.09**	**1L5XX**
(f)	Over 50	**79.85**	**11.73**	**3.09**	**1L5XX**

b. For use with the BSE - Queuing (Music After Delay Announcement Subelements Only)

(1) **200 to 3500 Hz Mileage Bands**

(a)	0	**-**	**-**	**-**	**1L5XX**
(b)	Over 0 to 4	**85.53**	**10.02**	**2.19**	**1L5XX**
(c)	Over 4 to 8	**85.53**	**11.85**	**2.19**	**1L5XX**

Note 1: Available as a Two-wire Service Only.

E6. BELLSOUTH SWA SERVICE

E6.8 Rates and Charges (Cont'd)

E6.8.1 BellSouth SWA Transport (Cont'd)

I. Dedicated Network Access Lines (DNALs) (Cont'd)

3. DNAL Switched Interoffice Channel (Cont'd)

b. For use with the BSE - Queuing (Music After Delay Announcement Subelements Only) (Cont'd)

(1) **200 to 3500 Hz**
Mileage Bands (Cont'd)

		Nonrecurring Charge	Rates Fixed	Per Mile	USOC
(d)	Over 8 to 25	**$85.53**	**$13.68**	**$2.19**	**1L5XX**
(e)	Over 25 to 50	**85.53**	**15.52**	**2.19**	**1L5XX**
(f)	Over 50	**85.53**	**17.35**	**2.19**	**1L5XX**

(2) **100 to 5000Hz**
Mileage Bands

(a)	0	**-**	**-**	**-**	**1L5XX**
(b)	Over 0 to 4	**93.07**	**14.69**	**3.85**	**1L5XX**
(c)	Over 4 to 8	**93.07**	**18.99**	**3.85**	**1L5XX**
(d)	Over 8 to 25	**93.07**	**23.28**	**3.85**	**1L5XX**
(e)	Over 25 to 50	**93.07**	**27.59**	**3.85**	**1L5XX**
(f)	Over 50	**93.07**	**31.90**	**3.85**	**1L5XX**

(3) **50 to 8000 Hz**
Mileage Bands

(a)	0	**-**	**-**	**-**	**1L5XX**
(b)	Over 0 to 4	**98.97**	**18.37**	**5.76**	**1L5XX**
(c)	Over 4 to 8	**98.97**	**22.87**	**5.76**	**1L5XX**
(d)	Over 8 to 25	**98.97**	**27.36**	**5.76**	**1L5XX**
(e)	Over 25 to 50	**98.97**	**31.88**	**5.76**	**1L5XX**
(f)	Over 50	**98.97**	**36.38**	**5.76**	**1L5XX**

J. BellSouth CCS7 Signaling Connections, CCS7 Signaling Terminations and CCS7 Access Arrangement Usage

1. CCS7 Signaling Connection

		Monthly Rate	Nonrecurring Charge	USOC
(a)	Per 56 kbps facility	**$155.00**	**$150.00**	**TPP++**

2. CCS7 Signaling Termination

(a)	Per STP port	**337.05**	**-**	**PT8SX**

3. CCS7 Signaling Usage

		Rate	USOC
(a)	Call Set-Up, per message (ISUP)	**$0.000035**	**NA**
(b)	TCAP, per message	**0.000123**	**NA**

4. CCS7 Point Code Establishment or Change

		Nonrecurring Charge First	Nonrecurring Charge Additional	USOC	
(a)	Originating Point Code, Established or Changed	**$40.00**	**$8.00**	**CCAPO**	(T)(U)
(b)	Per Destination Point Code, Established or Changed	**8.00**	**8.00**	**CCAPD**	(T)(U)

All BellSouth marks contained herein and as set forth in the trademarks and servicemarks section of this Tariff are owned by BellSouth Intellectual Property Corporation.

E6. BELLSOUTH SWA SERVICE

E6.8 Rates and Charges (Cont'd)

E6.8.1 BellSouth SWA Transport (Cont'd)

K. BellSouth Dedicated Ring - Self-healing Multi-nodal Alternate Route Topology Ring - Month-to-Month

		Month-to-Month	Nonrecurring Charge	USOC	
1.	Local Channel (All capacities except OC-1)				
(a)	Per Local Channel	$ -	$410.00	1HSLC	
(b)	Per Quarter Air Mile	95.00	-	1HSLC	
2.	Alternate Central Office (All capacities except OC-1)				
(a)	Per Alternate C.O. Channel	-	440.00	1HSAC	
(b)	Per Quarter Air Mile	1,500.00	-	1HSAC	
3.	Interoffice Channel (All capacities except OC-1)				
(a)	Per Channel, ***except OC-192 and OC-192+ Capacity***	-	130.00	1HS1C	(C)
(b)	Fixed, OC-3 Capacity	50.00	-	1HS1C	
(c)	Fixed, OC-3+, OC-12, OC-48 or OC-48+ Capacity	175.00	-	1HS1C	
(d)	Fixed, OC-192 or OC-192+ Capacity	600.00	300.00	1HS1C	(N)
(*e*)	Per Quarter Air Mile, OC-3 Capacity	45.00	-	1HS1C	(T)
(*f*)	Per Quarter Air Mile, OC-3+, OC-12, OC-48 or OC-48+ Capacity	55.00	-	1HS1C	(T)
(g)	Per Quarter Air Mile, OC-192 or OC-192+ Capacity	55.00	-	1HS1C	(N)
4.	Internodal Channel (All capacities except OC-1)				
(a)	Per Internodal Channel, Same Wire Center Area, Per Quarter Air Mile	3,000.00	430.00	1HSSC	
(b)	Per Internodal Channel, Same Office Park/Campus Environment in Contiguous Serving Wire Center Areas, Per Quarter Air Mile	3,500.00	430.00	1HSCC	
5.	Customer Node (Per Customer Node)				
(a)	OC-1 Capacity	800.00	430.00	SHSC4	
(b)	OC-3 Capacity	2,200.00	460.00	SHSC3	
(c)	OC-3+ Capacity	3,000.00	460.00	SHSN5	
(d)	OC-12 Capacity	3,400.00	460.00	SHSC1	
(e)	OC-48 Capacity	5,800.00	460.00	SHSN8	
(f)	OC-48+ Capacity	6,500.00	460.00	SHSN9	
(g)	OC-192 Capacity	25,000.00	540.00	SHSN6	(N)
(h)	OC-192+ Capacity	25,000.00	540.00	SHSC2	(N)
6.	Customer Channel Interface (Per Customer Node)				
(a)	Per DS1	35.00	240.00	SHSBB	
(b)	Per DS3	170.00	105.00	SHSZT	
(c)	Per STS-1	220.00	105.00	SHS13	
(d)	Per OC-1	100.00	115.00	SHS1C	
(e)	Per OC-3, 2-Fiber	240.00	110.00	SHS1D	
(f)	Per OC-3, 4-Fiber	475.00	110.00	SHS15	
(g)	Per OC-12, 2-Fiber	715.00	115.00	SHS1F	
(h)	Per OC-12, 4-Fiber	1,430.00	115.00	SHS19	
(i)	Per OC-48, 2-Fiber	1,600.00	420.00	SHS1A	(N)
(j)	Per OC-48, 4-Fiber	3,200.00	420.00	SHS1B	(N)
					(M)

Material previously appearing on this page now appears on page(s) 50.2.1 of this section.

All BellSouth marks contained herein are owned by BellSouth Intellectual Property Corporation

E6. BELLSOUTH SWA SERVICE

E6.8 Rates and Charges (Cont'd)

E6.8.1 BellSouth SWA Transport (Cont'd)

K. BellSouth Dedicated Ring - Self-healing Multi-nodal Alternate Route Topology Ring - Month-to-Month (Cont'd)

7. Central Office Node (Per Central Office Node)

		Month-to-Month	Nonrecurring Charge	USOC	
(a)	OC-1 Capacity	**$600.00**	**$420.00**	**SHSH4**	
(b)	OC-3 Capacity	**1,400.00**	**460.00**	**SHSH3**	
(c)	OC-3+ Capacity	**2,500.00**	**460.00**	**SHSH5**	
(d)	OC-12 Capacity	**2,600.00**	**460.00**	**SHSH1**	
(e)	OC-48 Capacity	**5,400.00**	**460.00**	**SHSH8**	
(f)	OC-48+ Capacity	**6,100.00**	**460.00**	**SHSH9**	
(g)	OC-192 Capacity	**25,000.00**	**540.00**	**SHSH7**	
(h)	OC-192+ Capacity	**25,000.00**	**540.00**	**SHSH2**	
(i)	OC-3 Shared Node Interconnection	**980.00**	**550.00**	**SHSHE**	(N)
(j)	OC-12 Shared Node Interconnection	**1,820.00**	**550.00**	**SHSHE**	(N)
(k)	OC-48 Shared Node Interconnection	**3,400.00**	**550.00**	**SHSHE**	(N)
(l)	OC-48+ Shared Node Interconnection	**3,840.00**	**550.00**	**SHSHE**	(N)

All BellSouth marks contained herein and as set forth in the trademarks and service marks section of the BellSouth Tariffs are owned by BellSouth Intellectual Property Corporation.

E6. BELLSOUTH SWA SERVICE

E6.8 Rates and Charges (Cont'd)

E6.8.1 BellSouth SWA Transport (Cont'd)

K. BellSouth Dedicated Ring - Self-healing Multi-nodal Alternate Route Topology Ring - Month-to-Month (Cont'd)

8. Central Office Channel Interface (Per Central Office Node)

		Month-to-Month	Nonrecurring Charge	USOC	
(a)	Per DS1	**$35.00**	**$99.00**	**SHSCB**	
(b)	Per DS3	**115.00**	**150.00**	**SHSYT**	
(c)	Per STS-1	**150.00**	**160.00**	**SHSO2**	
(d)	Per OC-1	**100.00**	**170.00**	**SHSCC**	
(e)	Per OC-3, 2-Fiber	**240.00**	**100.00**	**SHSCD**	
(f)	Per OC-3, 4-Fiber	**425.00**	**100.00**	**SHSO4**	
(g)	Per OC-12, 2-Fiber	**640.00**	**100.00**	**SHSCF**	
(h)	Per OC-12, 4-Fiber	**1,280.00**	**100.00**	**SHSC9**	
(i)	Per OC-48, 2-Fiber	**1,600.00**	**600.00**	**SHSCJ**	(N)
(j)	Per OC-48, 4-Fiber	**3,200.00**	**600.00**	**SHSCK**	(N)
(***k***)	Per 28 DS1 Channel System - DS3	**650.00**	**130.00**	**SHSW8**	(T)
(***l***)	Per 28 DS1 Channel System - STS-1	**750.00**	**130.00**	**SHSCS**	(T)
(***m***)	Per DS1 on 28 DS1 Channel System - DS3	**12.00**	**130.00**	**SHSCA**	(T)
(***n***)	Per DS1 on 28 DS1 Channel System - STS-1	**40.00**	**82.00**	**SHSCG**	(T)

L. BellSouth Dedicated Ring - Self-healing Multi-nodal Alternate Route Topology Ring - Transport Payment Plan

1. Local Channel (All capacities except OC-1)

		Per Month Rates A 12-36 Months	B 37-60 Months	C 61-96 Months	USOC	
(a)	Per Quarter Air Mile	**$85.00**	**$75.00**	**$70.00**	**1HSLC**	
2.	Alternate Central Office (All capacities except OC-1)					
(a)	Per Quarter Air Mile	**400.00**	**250.00**	**200.00**	**1HSAC**	
3.	Interoffice Channel (All capacities except OC-1)					
(a)	Fixed, OC-3 Capacity	**40.00**	**35.00**	**30.00**	**1HS1C**	
(b)	Fixed, OC-3+, OC-12, OC-48 or OC-48+ Capacity	**155.00**	**140.00**	**130.00**	**1HS1C**	
(c)	Fixed, OC-192 or OC-192+ Capacity	**450.00**	**400.00**	**380.00**	**1HS1C**	(N)
(***d***)	Per Quarter Air Mile, OC-3 Capacity	**35.00**	**25.00**	**20.00**	**1HS1C**	(T)
(***e***)	Per Quarter Air Mile, OC-3+, OC-12, OC-48 or OC-48+ Capacity	**40.00**	**33.00**	**25.00**	**1HS1C**	(T)
(f)	Per Quarter Air Mile, OC-192 or OC-192+ Capacity	**40.00**	**33.00**	**25.00**	**1HS1C**	(N)
4.	Internodal Channel (All capacities except OC-1)					
(a)	Per Internodal Channel, Same Wire Center Area, Per Quarter Air Mile	**690.00**	**415.00**	**345.00**	**1HSSC**	
(b)	Per Internodal Channel, Same Office Park/Campus Environment in Contiguous Serving Wire Center Areas, Per Quarter Air Mile	**780.00**	**465.00**	**390.00**	**1HSCC**	
5.	Customer Node (Per Customer Node)					
(a)	OC-1 Capacity	**400.00**	**350.00**	**300.00**	**SHSC4**	
(b)	OC-3 Capacity	**1,100.00**	**1,000.00**	**900.00**	**SHSC3**	
(c)	OC-3+ Capacity	**2,050.00**	**1,750.00**	**1,500.00**	**SHSN5**	
(d)	OC-12 Capacity	**2,200.00**	**2,000.00**	**1,750.00**	**SHSC1**	
(e)	OC-48 Capacity	**4,900.00**	**4,500.00**	**3,900.00**	**SHSN8**	
(f)	OC-48+ Capacity	**4,900.00**	**4,500.00**	**3,900.00**	**SHSN9**	
(g)	OC-192 Capacity	**9,375.00**	**8,250.00**	**7,300.00**	**SHSN6**	(N)
(h)	OC-192+ Capacity	**9,375.00**	**8,250.00**	**7,300.00**	**SHSC2**	(N)

All BellSouth marks contained herein are owned by BellSouth Intellectual Property Corporation

E6. BELLSOUTH SWA SERVICE

E6.8 Rates and Charges (Cont'd)

E6.8.1 BellSouth SWA Transport (Cont'd)

L. BellSouth Dedicated Ring - Self-healing Multi-nodal Alternate Route Topology Ring - Transport Payment Plan (Cont'd)

6. Customer Channel Interface (Per Customer Node)

		Per Month Rates				
		A 12-36 Months	B 37-60 Months	C 61-96 Months	USOC	
(a)	Per DS1	$34.00	$27.00	$21.00	SHSBB	
(b)	Per DS3	135.00	130.00	125.00	SHSZT	
(c)	Per STS-1	170.00	150.00	140.00	SHS13	
(d)	Per OC-1	90.00	80.00	75.00	SHS1C	
(e)	Per OC-3, 2-Fiber	190.00	175.00	160.00	SHS1D	
(f)	Per OC-3, 4-Fiber	380.00	350.00	320.00	SHS15	
(g)	Per OC-12, 2-Fiber	570.00	525.00	480.00	SHS1F	
(h)	Per OC-12, 4-Fiber	1,140.00	1,050.00	960.00	SHS19	
(i)	Per OC-48, 2-Fiber	1,325.00	1,215.00	1,050.00	SHS1A	
(j)	Per OC-48, 4-Fiber	2,650.00	2,430.00	2,100.00	SHS1B	

7. Central Office Node (Per Central Office Node)

(a)	OC-1 Capacity	400.00	350.00	300.00	SHSH4	
(b)	OC-3 Capacity	1,100.00	1,000.00	900.00	SHSH3	
(c)	OC-3+ Capacity	2,050.00	1,750.00	1,500.00	SHSH5	
(d)	OC-12 Capacity	2,200.00	2,000.00	1,750.00	SHSH1	
(e)	OC-48 Capacity	4,900.00	4,500.00	3,900.00	SHSH8	
(f)	OC-48+ Capacity	4,900.00	4,500.00	3,900.00	SHSH9	
(g)	OC-192 Capacity	9,375.00	8,250.00	7,300.00	SHSH7	
(h)	OC-192+ Capacity	9,375.00	8,250.00	7,300.00	SHSH2	
(i)	OC-3 Shared Node Interconnection	690.00	630.00	570.00	SHSHE	(N)
(j)	OC-12 Shared Node Interconnection	1,390.00	1,260.00	1,100.00	SHSHE	(N)
(k)	OC-48 Shared Node Interconnection	2,880.00	2,840.00	2,460.00	SHSHE	(N)
(l)	OC-48+ Shared Node Interconnection	2,880.00	2,840.00	2,460.00	SHSHE	(N)

8. Central Office Channel Interface (Per Central Office Node)

(a)	Per DS1	30.00	25.00	20.00	SHSCB
(b)	Per DS3	85.00	80.00	75.00	SHSYT
(c)	Per STS-1	105.00	100.00	90.00	SHSO2
(d)	Per OC-1	90.00	80.00	75.00	SHSCC
(e)	Per OC-3, 2-Fiber	190.00	175.00	160.00	SHSCD
(f)	Per OC-3, 4-Fiber	330.00	300.00	270.00	SHSO4
(g)	Per OC-12, 2-Fiber	495.00	450.00	405.00	SHSCF
(h)	Per OC-12, 4-Fiber	990.00	900.00	810.00	SHSC9
(i)	Per OC-48, 2-Fiber	1,325.00	1,215.00	1,050.00	SHSCJ
(j)	Per OC-48, 4-Fiber	2,650.00	2,430.00	2,100.00	SHSCK
(k)	Per 28 DS1 Channel System - DS3	550.00	500.00	450.00	SHSW8
(l)	Per 28 DS1 Channel System - STS-1	650.00	600.00	575.00	SHSCS
(m)	Per DS1 on 28 DS1 Channel System - DS3	12.00	9.00	7.00	SHSCA
(n)	Per DS1 on 28 DS1 Channel System - STS-1	35.00	30.00	25.00	SHSCG

All BellSouth marks contained herein and as set forth in the trademarks and service marks section of the BellSouth Tariffs are owned by BellSouth Intellectual Property Corporation.

E6. BELLSOUTH SWA SERVICE

E6.8 Rates and Charges (Cont'd)

E6.8.1 BellSouth SWA Transport (Cont'd)

M. BellSouth Dedicated Ring - Self-healing Multi-nodal Alternate Route Topology Ring

1. Channel Interface Reallocation

	Nonrecurring Charge	USOC
(a) Per Node, Per Occurrence	**$245.00**	**SHSBC**

N. (DELETED) (D)

All BellSouth marks contained herein and as set forth in the trademarks and servicemarks section of this Tariff are owned by BellSouth Intellectual Property Corporation.

E6. BELLSOUTH SWA SERVICE

E6.8 Rates and Charges (Cont'd)

E6.8.1 BellSouth SWA Transport (Cont'd)

O. Channels for Use With BellSouth SWA Managed Shared Network Service (N)

1. DS3 Service - Flat rate per Local Channel, per Aggregation Location. (N)

(a) Zone 1 (N)

Quantity of DS3s Per Aggregation Location	Month to Month/ 12 Month Rate	60 Month Rate	USOC	
1	$5,913.00	$3,285.00	OHS3L	(N)
2	$6,093.00	$3,385.00	OHS3L	(N)
3	$6,273.00	$3,485.00	OHS3L	(N)
4	$6,453.00	$3,585.00	OHS3L	(N)
5	$7,353.00	$3,685.00	OHS3L	(N)
6	$8,253.00	$3,785.00	OHS3L	(N)
7	$9,272.00	$3,885.00	OHS3L	(N)
8	$10,244.00	$3,985.00	OHS3L	(N)
9	$11,171.00	$4,085.00	OHS3L	(N)
10	$12,053.00	$4,185.00	OHS3L	(N)
11	$12,894.00	$4,285.00	OHS3L	(N)
12	$13,691.00	$4,728.00	OHS3L	(N)
13	$14,448.00	$5,149.00	OHS3L	(N)
14	$15,168.00	$5,549.00	OHS3L	(N)
15	$15,849.00	$5,927.00	OHS3L	(N)
16	$16,496.00	$6,286.00	OHS3L	(N)
17	$17,106.00	$6,625.00	OHS3L	(N)
18	$17,682.00	$6,945.00	OHS3L	(N)
19	$18,225.00	$7,247.00	OHS3L	(N)
20	$18,738.00	$7,697.00	OHS3L	(N)
21	$19,223.00	$8,147.00	OHS3L	(N)
22	$19,677.00	$8,597.00	OHS3L	(N)
23	$20,106.00	$9,047.00	OHS3L	(N)
24	$20,505.00	$9,497.00	OHS3L	(N)
25	$20,886.00	$9,947.00	OHS3L	(N)
26	$21,240.00	$10,397.00	OHS3L	(N)
27	$21,573.00	$10,847.00	OHS3L	(N)
28	$21,887.00	$11,297.00	OHS3L	(N)
29	$22,178.00	$11,747.00	OHS3L	(N)
30	$22,455.00	$12,197.00	OHS3L	(N)
31	$22,715.00	$12,619.00	OHS3L	(N)
32	$22,958.00	$12,754.00	OHS3L	(N)
33	$23,187.00	$12,882.00	OHS3L	(N)
34	$23,406.00	$13,003.00	OHS3L	(N)
35	$23,613.00	$13,118.00	OHS3L	(N)
36	$23,807.00	$13,226.00	OHS3L	(N)
37	$23,994.00	$13,330.00	OHS3L	(N)
38	$24,176.00	$13,431.00	OHS3L	(N)
39	$24,351.00	$13,528.00	OHS3L	(N)
40	$24,519.00	$13,622.00	OHS3L	(N)

E6. BELLSOUTH SWA SERVICE (N)

E6.8 Rates and Charges (Cont'd) (N)

E6.8.1 BellSouth SWA Transport (Cont'd) (N)

O. Channels for Use With BellSouth SWA Managed Shared Network Service (Cont'd) (N)

1. DS3 Service - Flat rate per Local Channel, per Aggregation Location. (Cont'd) (N)

(a) Zone 1 (Cont'd) (N)

Quantity of DS3s Per Aggregation Location	Month to Month/ 12 Month Rate	60 Month Rate	USOC	
41	**$24,687.00**	**$13,715.00**	**OHS3L**	(N)
42	**$24,851.00**	**$13,806.00**	**OHS3L**	(N)
43	**$25,014.00**	**$13,897.00**	**OHS3L**	(N)
44	**$25,179.00**	**$13,988.00**	**OHS3L**	(N)
45	**$25,344.00**	**$14,080.00**	**OHS3L**	(N)
46	**$25,514.00**	**$14,174.00**	**OHS3L**	(N)
47	**$25,688.00**	**$14,271.00**	**OHS3L**	(N)
48	**$25,868.00**	**$14,371.00**	**OHS3L**	(N)
49	**$26,408.00**	**$14,671.00**	**OHS3L**	(N)
50	**$26,903.00**	**$14,946.00**	**OHS3L**	(N)
51	**$27,353.00**	**$15,196.00**	**OHS3L**	(N)
52	**$27,758.00**	**$15,421.00**	**OHS3L**	(N)
53	**$27,938.00**	**$15,521.00**	**OHS3L**	(N)
54	**$28,298.00**	**$15,721.00**	**OHS3L**	(N)
55	**$28,613.00**	**$15,896.00**	**OHS3L**	(N)
56	**$28,883.00**	**$16,046.00**	**OHS3L**	(N)
57	**$29,063.00**	**$16,146.00**	**OHS3L**	(N)
58	**$29,288.00**	**$16,271.00**	**OHS3L**	(N)
59	**$29,468.00**	**$16,371.00**	**OHS3L**	(N)
60	**$29,648.00**	**$16,471.00**	**OHS3L**	(N)
61	**$30,280.00**	**$16,820.00**	**OHS3L**	(N)
62	**$30,910.00**	**$17,170.00**	**OHS3L**	(N)
63	**$31,540.00**	**$17,520.00**	**OHS3L**	(N)
64	**$32,170.00**	**$17,870.00**	**OHS3L**	(N)
65	**$32,800.00**	**$18,220.00**	**OHS3L**	(N)
66	**$33,430.00**	**$18,570.00**	**OHS3L**	(N)
67	**$34,060.00**	**$18,920.00**	**OHS3L**	(N)
68	**$34,690.00**	**$19,270.00**	**OHS3L**	(N)
69	**$35,320.00**	**$19,620.00**	**OHS3L**	(N)
70	**$35,950.00**	**$19,970.00**	**OHS3L**	(N)
71	**$36,580.00**	**$20,320.00**	**OHS3L**	(N)
72	**$37,210.00**	**$20,670.00**	**OHS3L**	(N)
73	**$37,840.00**	**$21,020.00**	**OHS3L**	(N)
74	**$38,470.00**	**$21,370.00**	**OHS3L**	(N)
75	**$39,100.00**	**$21,720.00**	**OHS3L**	(N)
76	**$39,730.00**	**$22,070.00**	**OHS3L**	(N)
77	**$40,360.00**	**$22,420.00**	**OHS3L**	(N)
78	**$40,990.00**	**$22,770.00**	**OHS3L**	(N)
79	**$41,620.00**	**$23,120.00**	**OHS3L**	(N)
80	**$42,250.00**	**$23,470.00**	**OHS3L**	(N)

E6. BELLSOUTH SWA SERVICE (N)

E6.8 Rates and Charges (Cont'd) (N)

E6.8.1 BellSouth SWA Transport (Cont'd) (N)

O. Channels for Use With BellSouth SWA Managed Shared Network Service (Cont'd) (N)

1. DS3 Service - Flat rate per Local Channel, per Aggregation Location. (Cont'd) (N)

(a) Zone 1 (Cont'd) (N)

Quantity of DS3s Per Aggregation Location	Month to Month/ 12 Month Rate	60 Month Rate	USOC	
81	**$42,880.00**	**$23,820.00**	**OHS3L**	(N)
82	**$43,510.00**	**$24,170.00**	**OHS3L**	(N)
83	**$44,140.00**	**$24,520.00**	**OHS3L**	(N)
84	**$44,770.00**	**$24,870.00**	**OHS3L**	(N)
85	**$45,400.00**	**$25,220.00**	**OHS3L**	(N)
86	**$46,030.00**	**$25,570.00**	**OHS3L**	(N)
87	**$46,660.00**	**$25,920.00**	**OHS3L**	(N)
88	**$47,290.00**	**$26,270.00**	**OHS3L**	(N)
89	**$47,920.00**	**$26,620.00**	**OHS3L**	(N)
90	**$48,550.00**	**$26,970.00**	**OHS3L**	(N)
91	**$49,180.00**	**$27,320.00**	**OHS3L**	(N)
92	**$49,810.00**	**$27,670.00**	**OHS3L**	(N)
93	**$50,440.00**	**$28,020.00**	**OHS3L**	(N)
94	**$51,070.00**	**$28,370.00**	**OHS3L**	(N)
95	**$51,700.00**	**$28,720.00**	**OHS3L**	(N)
96	**$52,330.00**	**$29,070.00**	**OHS3L**	(N)
97	**$52,960.00**	**$29,420.00**	**OHS3L**	(N)
98	**$53,590.00**	**$29,770.00**	**OHS3L**	(N)
99	**$54,220.00**	**$30,120.00**	**OHS3L**	(N)
100	**$54,850.00**	**$30,470.00**	**OHS3L**	(N)
101	**$55,480.00**	**$30,820.00**	**OHS3L**	(N)
102	**$56,110.00**	**$31,170.00**	**OHS3L**	(N)
103	**$56,740.00**	**$31,520.00**	**OHS3L**	(N)
104	**$57,370.00**	**$31,870.00**	**OHS3L**	(N)
105	**$58,000.00**	**$32,220.00**	**OHS3L**	(N)
106	**$58,630.00**	**$32,570.00**	**OHS3L**	(N)
107	**$59,260.00**	**$32,920.00**	**OHS3L**	(N)
108	**$59,890.00**	**$33,270.00**	**OHS3L**	(N)
109	**$60,520.00**	**$33,620.00**	**OHS3L**	(N)
110	**$61,150.00**	**$33,970.00**	**OHS3L**	(N)
111	**$61,780.00**	**$34,320.00**	**OHS3L**	(N)
112	**$62,410.00**	**$34,670.00**	**OHS3L**	(N)
113	**$63,040.00**	**$35,020.00**	**OHS3L**	(N)
114	**$63,670.00**	**$35,370.00**	**OHS3L**	(N)
115	**$64,300.00**	**$35,720.00**	**OHS3L**	(N)
116	**$64,930.00**	**$36,070.00**	**OHS3L**	(N)
117	**$65,560.00**	**$36,420.00**	**OHS3L**	(N)
118	**$66,190.00**	**$36,770.00**	**OHS3L**	(N)
119	**$66,820.00**	**$37,120.00**	**OHS3L**	(N)
120	**$67,450.00**	**$37,470.00**	**OHS3L**	(N)

E6. BELLSOUTH SWA SERVICE (N)

E6.8 Rates and Charges (Cont'd) (N)

E6.8.1 BellSouth SWA Transport (Cont'd) (N)

O. Channels for Use With BellSouth SWA Managed Shared Network Service (Cont'd) (N)

1. DS3 Service - Flat rate per Local Channel, per Aggregation Location. (Cont'd) (N)

(a) Zone 1 (Cont'd) (N)

Quantity of DS3s Per Aggregation Location	Month to Month/ 12 Month Rate	60 Month Rate	USOC	
121	**$68,080.00**	**$37,820.00**	**OHS3L**	(N)
122	**$68,710.00**	**$38,170.00**	**OHS3L**	(N)
123	**$69,340.00**	**$38,520.00**	**OHS3L**	(N)
124	**$69,970.00**	**$38,870.00**	**OHS3L**	(N)
125	**$70,600.00**	**$39,220.00**	**OHS3L**	(N)
126	**$71,230.00**	**$39,570.00**	**OHS3L**	(N)
127	**$71,860.00**	**$39,920.00**	**OHS3L**	(N)
128	**$72,490.00**	**$40,270.00**	**OHS3L**	(N)
129	**$73,120.00**	**$40,620.00**	**OHS3L**	(N)
130	**$73,750.00**	**$40,970.00**	**OHS3L**	(N)
131	**$74,380.00**	**$41,320.00**	**OHS3L**	(N)
132	**$75,010.00**	**$41,670.00**	**OHS3L**	(N)
133	**$75,640.00**	**$42,020.00**	**OHS3L**	(N)
134	**$76,270.00**	**$42,370.00**	**OHS3L**	(N)
135	**$76,900.00**	**$42,720.00**	**OHS3L**	(N)
136	**$77,530.00**	**$43,070.00**	**OHS3L**	(N)
137	**$78,160.00**	**$43,420.00**	**OHS3L**	(N)
138	**$78,790.00**	**$43,770.00**	**OHS3L**	(N)
139	**$79,420.00**	**$44,120.00**	**OHS3L**	(N)
140	**$80,050.00**	**$44,470.00**	**OHS3L**	(N)
141	**$80,680.00**	**$44,820.00**	**OHS3L**	(N)
142	**$81,310.00**	**$45,170.00**	**OHS3L**	(N)
143	**$81,940.00**	**$45,520.00**	**OHS3L**	(N)
144	**$82,570.00**	**$45,870.00**	**OHS3L**	(N)
145	**$83,200.00**	**$46,220.00**	**OHS3L**	(N)
146	**$83,830.00**	**$46,570.00**	**OHS3L**	(N)
147	**$84,460.00**	**$46,920.00**	**OHS3L**	(N)
148	**$85,090.00**	**$47,270.00**	**OHS3L**	(N)
149	**$85,720.00**	**$47,620.00**	**OHS3L**	(N)
150	**$86,350.00**	**$47,970.00**	**OHS3L**	(N)
151	**$86,980.00**	**$48,320.00**	**OHS3L**	(N)
152	**$87,610.00**	**$48,670.00**	**OHS3L**	(N)
153	**$88,240.00**	**$49,020.00**	**OHS3L**	(N)
154	**$88,870.00**	**$49,370.00**	**OHS3L**	(N)
155	**$89,500.00**	**$49,720.00**	**OHS3L**	(N)
156	**$90,130.00**	**$50,070.00**	**OHS3L**	(N)
157	**$90,760.00**	**$50,420.00**	**OHS3L**	(N)
158	**$91,390.00**	**$50,770.00**	**OHS3L**	(N)
159	**$92,020.00**	**$51,120.00**	**OHS3L**	(N)
160	**$92,650.00**	**$51,470.00**	**OHS3L**	(N)

E6. BELLSOUTH SWA SERVICE (N)

E6.8 Rates and Charges (Cont'd) (N)

E6.8.1 BellSouth SWA Transport (Cont'd) (N)

O. Channels for Use With BellSouth SWA Managed Shared Network Service (Cont'd) (N)

1. DS3 Service - Flat rate per Local Channel, per Aggregation Location. (Cont'd)

(a) Zone 1 (Cont'd) (N)

Quantity of DS3s Per Aggregation Location	Month to Month/ 12 Month Rate	60 Month Rate	USOC	
161	**$93,280.00**	**$51,820.00**	**OHS3L**	(N)
162	**$93,910.00**	**$52,170.00**	**OHS3L**	(N)
163	**$94,540.00**	**$52,520.00**	**OHS3L**	(N)
164	**$95,170.00**	**$52,870.00**	**OHS3L**	(N)
165	**$95,800.00**	**$53,220.00**	**OHS3L**	(N)
166	**$96,430.00**	**$53,570.00**	**OHS3L**	(N)
167	**$97,060.00**	**$53,920.00**	**OHS3L**	(N)
168	**$97,690.00**	**$54,270.00**	**OHS3L**	(N)
169	**$98,320.00**	**$54,620.00**	**OHS3L**	(N)
170	**$98,950.00**	**$54,970.00**	**OHS3L**	(N)
171	**$99,580.00**	**$55,320.00**	**OHS3L**	(N)
172	**$100,210.00**	**$55,670.00**	**OHS3L**	(N)
173	**$100,840.00**	**$56,020.00**	**OHS3L**	(N)
174	**$101,470.00**	**$56,370.00**	**OHS3L**	(N)
175	**$102,100.00**	**$56,720.00**	**OHS3L**	(N)
176	**$102,730.00**	**$57,070.00**	**OHS3L**	(N)
177	**$103,360.00**	**$57,420.00**	**OHS3L**	(N)
178	**$103,990.00**	**$57,770.00**	**OHS3L**	(N)
179	**$104,620.00**	**$58,120.00**	**OHS3L**	(N)
180	**$105,250.00**	**$58,470.00**	**OHS3L**	(N)
181	**$105,880.00**	**$58,820.00**	**OHS3L**	(N)
182	**$106,510.00**	**$59,170.00**	**OHS3L**	(N)
183	**$107,140.00**	**$59,520.00**	**OHS3L**	(N)
184	**$107,770.00**	**$59,870.00**	**OHS3L**	(N)
185	**$108,400.00**	**$60,220.00**	**OHS3L**	(N)
186	**$109,030.00**	**$60,570.00**	**OHS3L**	(N)
187	**$109,660.00**	**$60,920.00**	**OHS3L**	(N)
188	**$110,290.00**	**$61,270.00**	**OHS3L**	(N)
189	**$110,920.00**	**$61,620.00**	**OHS3L**	(N)
190	**$111,550.00**	**$61,970.00**	**OHS3L**	(N)
191	**$112,180.00**	**$62,320.00**	**OHS3L**	(N)
192	**$112,810.00**	**$62,670.00**	**OHS3L**	(N)

E6. BELLSOUTH SWA SERVICE (N)

E6.8 Rates and Charges (Cont'd) (N)

E6.8.1 BellSouth SWA Transport (Cont'd) (N)

O. Channels for Use With BellSouth SWA Managed Shared Network Service (Cont'd) (N)

1. DS3 Service - Flat rate per Local Channel, per Aggregation Location. (Cont'd) (N)

(b) Zone 2 (N)

Quantity of DS3s Per Aggregation Location	Month to Month/ 12 Month Rate	60 Month Rate	USOC	
1	$7,096.00	$3,942.00	OHS3L	(N)
2	$7,312.00	$4,062.00	OHS3L	(N)
3	$7,528.00	$4,182.00	OHS3L	(N)
4	$7,744.00	$4,302.00	OHS3L	(N)
5	$8,824.00	$4,902.00	OHS3L	(N)
6	$9,904.00	$5,502.00	OHS3L	(N)
7	$11,126.00	$6,181.00	OHS3L	(N)
8	$12,293.00	$6,829.00	OHS3L	(N)
9	$13,405.00	$7,447.00	OHS3L	(N)
10	$14,464.00	$8,035.00	OHS3L	(N)
11	$15,473.00	$8,596.00	OHS3L	(N)
12	$16,429.00	$9,127.00	OHS3L	(N)
13	$17,338.00	$9,632.00	OHS3L	(N)
14	$18,202.00	$10,112.00	OHS3L	(N)
15	$19,019.00	$10,566.00	OHS3L	(N)
16	$19,795.00	$10,997.00	OHS3L	(N)
17	$20,527.00	$11,404.00	OHS3L	(N)
18	$21,218.00	$11,788.00	OHS3L	(N)
19	$21,870.00	$12,150.00	OHS3L	(N)
20	$22,486.00	$12,492.00	OHS3L	(N)
21	$23,068.00	$12,815.00	OHS3L	(N)
22	$23,612.00	$13,118.00	OHS3L	(N)
23	$24,127.00	$13,404.00	OHS3L	(N)
24	$24,606.00	$13,670.00	OHS3L	(N)
25	$25,063.00	$13,924.00	OHS3L	(N)
26	$25,488.00	$14,160.00	OHS3L	(N)
27	$25,888.00	$14,382.00	OHS3L	(N)
28	$26,264.00	$14,591.00	OHS3L	(N)
29	$26,614.00	$14,785.00	OHS3L	(N)
30	$26,946.00	$14,970.00	OHS3L	(N)
31	$27,258.00	$15,143.00	OHS3L	(N)
32	$27,550.00	$15,305.00	OHS3L	(N)
33	$27,824.00	$15,458.00	OHS3L	(N)
34	$28,087.00	$15,604.00	OHS3L	(N)
35	$28,336.00	$15,742.00	OHS3L	(N)
36	$28,568.00	$15,871.00	OHS3L	(N)
37	$28,793.00	$15,996.00	OHS3L	(N)
38	$29,011.00	$16,117.00	OHS3L	(N)
39	$29,221.00	$16,234.00	OHS3L	(N)
40	$29,423.00	$16,346.00	OHS3L	(N)

E6. BELLSOUTH SWA SERVICE (N)

E6.8 Rates and Charges (Cont'd) (N)

E6.8.1 BellSouth SWA Transport (Cont'd) (N)

O. Channels for Use With BellSouth SWA Managed Shared Network Service (Cont'd) (N)

1. DS3 Service - Flat rate per Local Channel, per Aggregation Location. (Cont'd) (N)

(b) Zone 2 (Cont'd) (N)

Quantity of DS3s Per Aggregation Location	Month to Month/ 12 Month Rate	60 Month Rate	USOC	
41	$29,624.00	$16,458.00	OHS3L	(N)
42	$29,821.00	$16,567.00	OHS3L	(N)
43	$30,017.00	$16,676.00	OHS3L	(N)
44	$30,215.00	$16,786.00	OHS3L	(N)
45	$30,413.00	$16,896.00	OHS3L	(N)
46	$30,617.00	$17,009.00	OHS3L	(N)
47	$30,826.00	$17,125.00	OHS3L	(N)
48	$31,042.00	$17,245.00	OHS3L	(N)
49	$31,690.00	$17,605.00	OHS3L	(N)
50	$32,284.00	$17,935.00	OHS3L	(N)
51	$32,824.00	$18,235.00	OHS3L	(N)
52	$33,310.00	$18,505.00	OHS3L	(N)
53	$33,526.00	$18,625.00	OHS3L	(N)
54	$33,958.00	$18,865.00	OHS3L	(N)
55	$34,336.00	$19,075.00	OHS3L	(N)
56	$34,660.00	$19,255.00	OHS3L	(N)
57	$34,876.00	$19,375.00	OHS3L	(N)
58	$35,146.00	$19,525.00	OHS3L	(N)
59	$35,362.00	$19,645.00	OHS3L	(N)
60	$35,578.00	$19,765.00	OHS3L	(N)
61	$36,335.00	$20,185.00	OHS3L	(N)
62	$37,090.00	$20,605.00	OHS3L	(N)
63	$37,845.00	$21,025.00	OHS3L	(N)
64	$38,600.00	$21,445.00	OHS3L	(N)
65	$39,355.00	$21,865.00	OHS3L	(N)
66	$40,110.00	$22,285.00	OHS3L	(N)
67	$40,865.00	$22,705.00	OHS3L	(N)
68	$41,620.00	$23,125.00	OHS3L	(N)
69	$42,375.00	$23,545.00	OHS3L	(N)
70	$43,130.00	$23,965.00	OHS3L	(N)
71	$43,885.00	$24,385.00	OHS3L	(N)
72	$44,640.00	$24,805.00	OHS3L	(N)
73	$45,395.00	$25,225.00	OHS3L	(N)
74	$46,150.00	$25,645.00	OHS3L	(N)
75	$46,905.00	$26,065.00	OHS3L	(N)
76	$47,660.00	$26,485.00	OHS3L	(N)
77	$48,415.00	$26,905.00	OHS3L	(N)
78	$49,170.00	$27,325.00	OHS3L	(N)
79	$49,925.00	$27,745.00	OHS3L	(N)
80	$50,680.00	$28,165.00	OHS3L	(N)

E6. BELLSOUTH SWA SERVICE (N)

E6.8 Rates and Charges (Cont'd) (N)

E6.8.1 BellSouth SWA Transport (Cont'd) (N)

O. Channels for Use With BellSouth SWA Managed Shared Network Service (Cont'd) (N)

1. DS3 Service - Flat rate per Local Channel, per Aggregation Location. (Cont'd) (N)

(b) Zone 2 (Cont'd) (N)

Quantity of DS3s Per Aggregation Location	Month to Month/ 12 Month Rate	60 Month Rate	USOC	
81	**$51,435.00**	**$28,585.00**	**OHS3L**	(N)
82	**$52,190.00**	**$29,005.00**	**OHS3L**	(N)
83	**$52,945.00**	**$29,425.00**	**OHS3L**	(N)
84	**$53,700.00**	**$29,845.00**	**OHS3L**	(N)
85	**$54,455.00**	**$30,265.00**	**OHS3L**	(N)
86	**$55,210.00**	**$30,685.00**	**OHS3L**	(N)
87	**$55,965.00**	**$31,105.00**	**OHS3L**	(N)
88	**$56,720.00**	**$31,525.00**	**OHS3L**	(N)
89	**$57,475.00**	**$31,945.00**	**OHS3L**	(N)
90	**$58,230.00**	**$32,365.00**	**OHS3L**	(N)
91	**$58,985.00**	**$32,785.00**	**OHS3L**	(N)
92	**$59,740.00**	**$33,205.00**	**OHS3L**	(N)
93	**$60,495.00**	**$33,625.00**	**OHS3L**	(N)
94	**$61,250.00**	**$34,045.00**	**OHS3L**	(N)
95	**$62,005.00**	**$34,465.00**	**OHS3L**	(N)
96	**$62,760.00**	**$34,885.00**	**OHS3L**	(N)
97	**$63,515.00**	**$35,305.00**	**OHS3L**	(N)
98	**$64,270.00**	**$35,725.00**	**OHS3L**	(N)
99	**$65,025.00**	**$36,145.00**	**OHS3L**	(N)
100	**$65,780.00**	**$36,565.00**	**OHS3L**	(N)
101	**$66,535.00**	**$36,985.00**	**OHS3L**	(N)
102	**$67,290.00**	**$37,405.00**	**OHS3L**	(N)
103	**$68,045.00**	**$37,825.00**	**OHS3L**	(N)
104	**$68,800.00**	**$38,245.00**	**OHS3L**	(N)
105	**$69,555.00**	**$38,665.00**	**OHS3L**	(N)
106	**$70,310.00**	**$39,085.00**	**OHS3L**	(N)
107	**$71,065.00**	**$39,505.00**	**OHS3L**	(N)
108	**$71,820.00**	**$39,925.00**	**OHS3L**	(N)
109	**$72,575.00**	**$40,345.00**	**OHS3L**	(N)
110	**$73,330.00**	**$40,765.00**	**OHS3L**	(N)
111	**$74,085.00**	**$41,185.00**	**OHS3L**	(N)
112	**$74,840.00**	**$41,605.00**	**OHS3L**	(N)
113	**$75,595.00**	**$42,025.00**	**OHS3L**	(N)
114	**$76,350.00**	**$42,445.00**	**OHS3L**	(N)
115	**$77,105.00**	**$42,865.00**	**OHS3L**	(N)
116	**$77,860.00**	**$43,285.00**	**OHS3L**	(N)
117	**$78,615.00**	**$43,705.00**	**OHS3L**	(N)
118	**$79,370.00**	**$44,125.00**	**OHS3L**	(N)
119	**$80,125.00**	**$44,545.00**	**OHS3L**	(N)
120	**$80,880.00**	**$44,965.00**	**OHS3L**	(N)

E6. BELLSOUTH SWA SERVICE (N)

E6.8 Rates and Charges (Cont'd) (N)

E6.8.1 BellSouth SWA Transport (Cont'd) (N)

O. Channels for Use With BellSouth SWA Managed Shared Network Service (Cont'd) (N)

1. DS3 Service - Flat rate per Local Channel, per Aggregation Location. (Cont'd) (N)

(b) Zone 2 (Cont'd) (N)

Quantity of DS3s Per Aggregation Location	Month to Month/ 12 Month Rate	60 Month Rate	USOC	
121	**$81,635.00**	**$45,385.00**	**OHS3L**	(N)
122	**$82,390.00**	**$45,805.00**	**OHS3L**	(N)
123	**$83,145.00**	**$46,225.00**	**OHS3L**	(N)
124	**$83,900.00**	**$46,645.00**	**OHS3L**	(N)
125	**$84,655.00**	**$47,065.00**	**OHS3L**	(N)
126	**$85,410.00**	**$47,485.00**	**OHS3L**	(N)
127	**$86,165.00**	**$47,905.00**	**OHS3L**	(N)
128	**$86,920.00**	**$48,325.00**	**OHS3L**	(N)
129	**$87,675.00**	**$48,745.00**	**OHS3L**	(N)
130	**$88,430.00**	**$49,165.00**	**OHS3L**	(N)
131	**$89,185.00**	**$49,585.00**	**OHS3L**	(N)
132	**$89,940.00**	**$50,005.00**	**OHS3L**	(N)
133	**$90,695.00**	**$50,425.00**	**OHS3L**	(N)
134	**$91,450.00**	**$50,845.00**	**OHS3L**	(N)
135	**$92,205.00**	**$51,265.00**	**OHS3L**	(N)
136	**$92,960.00**	**$51,685.00**	**OHS3L**	(N)
137	**$93,715.00**	**$52,105.00**	**OHS3L**	(N)
138	**$94,470.00**	**$52,525.00**	**OHS3L**	(N)
139	**$95,225.00**	**$52,945.00**	**OHS3L**	(N)
140	**$95,980.00**	**$53,365.00**	**OHS3L**	(N)
141	**$96,735.00**	**$53,785.00**	**OHS3L**	(N)
142	**$97,490.00**	**$54,205.00**	**OHS3L**	(N)
143	**$98,245.00**	**$54,625.00**	**OHS3L**	(N)
144	**$99,000.00**	**$55,045.00**	**OHS3L**	(N)
145	**$99,840.00**	**$55,470.00**	**OHS3L**	(N)
146	**$100,600.00**	**$55,890.00**	**OHS3L**	(N)
147	**$101,360.00**	**$56,310.00**	**OHS3L**	(N)
148	**$102,110.00**	**$56,730.00**	**OHS3L**	(N)
149	**$102,870.00**	**$57,150.00**	**OHS3L**	(N)
150	**$103,620.00**	**$57,570.00**	**OHS3L**	(N)
151	**$104,380.00**	**$57,990.00**	**OHS3L**	(N)
152	**$105,140.00**	**$58,410.00**	**OHS3L**	(N)
153	**$105,890.00**	**$58,830.00**	**OHS3L**	(N)
154	**$106,650.00**	**$59,250.00**	**OHS3L**	(N)
155	**$107,400.00**	**$59,670.00**	**OHS3L**	(N)
156	**$108,160.00**	**$60,090.00**	**OHS3L**	(N)
157	**$108,920.00**	**$60,510.00**	**OHS3L**	(N)
158	**$109,670.00**	**$60,930.00**	**OHS3L**	(N)
159	**$110,430.00**	**$61,350.00**	**OHS3L**	(N)
160	**$111,180.00**	**$61,770.00**	**OHS3L**	(N)

E6. BELLSOUTH SWA SERVICE (N)

E6.8 Rates and Charges (Cont'd) (N)

E6.8.1 BellSouth SWA Transport (Cont'd) (N)

O. Channels for Use With BellSouth SWA Managed Shared Network Service (Cont'd) (N)

1. DS3 Service - Flat rate per Local Channel, per Aggregation Location. (Cont'd) (N)

(b) Zone 2 (Cont'd) (N)

Quantity of DS3s Per Aggregation Location	Month to Month/ 12 Month Rate	60 Month Rate	USOC	
161	**$111,940.00**	**$62,190.00**	**OHS3L**	(N)
162	**$112,700.00**	**$62,610.00**	**OHS3L**	(N)
163	**$113,450.00**	**$63,030.00**	**OHS3L**	(N)
164	**$114,210.00**	**$63,450.00**	**OHS3L**	(N)
165	**$114,960.00**	**$63,870.00**	**OHS3L**	(N)
166	**$115,720.00**	**$64,290.00**	**OHS3L**	(N)
167	**$116,480.00**	**$64,710.00**	**OHS3L**	(N)
168	**$117,230.00**	**$65,130.00**	**OHS3L**	(N)
169	**$117,990.00**	**$65,550.00**	**OHS3L**	(N)
170	**$118,740.00**	**$65,970.00**	**OHS3L**	(N)
171	**$119,500.00**	**$66,390.00**	**OHS3L**	(N)
172	**$120,260.00**	**$66,810.00**	**OHS3L**	(N)
173	**$121,010.00**	**$67,230.00**	**OHS3L**	(N)
174	**$121,770.00**	**$67,650.00**	**OHS3L**	(N)
175	**$122,520.00**	**$68,070.00**	**OHS3L**	(N)
176	**$123,280.00**	**$68,490.00**	**OHS3L**	(N)
177	**$124,040.00**	**$68,910.00**	**OHS3L**	(N)
178	**$124,790.00**	**$69,330.00**	**OHS3L**	(N)
179	**$125,550.00**	**$69,750.00**	**OHS3L**	(N)
180	**$126,300.00**	**$70,170.00**	**OHS3L**	(N)
181	**$127,060.00**	**$70,590.00**	**OHS3L**	(N)
182	**$127,820.00**	**$71,010.00**	**OHS3L**	(N)
183	**$128,570.00**	**$71,430.00**	**OHS3L**	(N)
184	**$129,330.00**	**$71,850.00**	**OHS3L**	(N)
185	**$130,080.00**	**$72,270.00**	**OHS3L**	(N)
186	**$130,840.00**	**$72,690.00**	**OHS3L**	(N)
187	**$131,600.00**	**$73,110.00**	**OHS3L**	(N)
188	**$132,350.00**	**$73,530.00**	**OHS3L**	(N)
189	**$133,110.00**	**$73,950.00**	**OHS3L**	(N)
190	**$133,860.00**	**$74,370.00**	**OHS3L**	(N)
191	**$134,620.00**	**$74,790.00**	**OHS3L**	(N)
192	**$135,380.00**	**$75,210.00**	**OHS3L**	(N)

E6. BELLSOUTH SWA SERVICE (N)

E6.8 Rates and Charges (Cont'd) (N)

E6.8.1 BellSouth SWA Transport (Cont'd) (N)

O. Channels for Use With BellSouth SWA Managed Shared Network Service (Cont'd) (N)

1. DS3 Service - Flat rate per Local Channel, per Aggregation Location. (Cont'd)

(c) Zone 3 (N)

Quantity of DS3s Per Aggregation Location	Month to Month/ 12 Month Rate	60 Month Rate	USOC	
1	$8,515.00	$4,730.00	OHS3L	(N)
2	$8,774.00	$4,874.00	OHS3L	(N)
3	$9,034.00	$5,018.00	OHS3L	(N)
4	$9,293.00	$5,162.00	OHS3L	(N)
5	$10,589.00	$5,882.00	OHS3L	(N)
6	$11,885.00	$6,602.00	OHS3L	(N)
7	$13,351.00	$7,417.00	OHS3L	(N)
8	$14,752.00	$8,195.00	OHS3L	(N)
9	$16,086.00	$8,936.00	OHS3L	(N)
10	$17,357.00	$9,642.00	OHS3L	(N)
11	$18,568.00	$10,315.00	OHS3L	(N)
12	$19,715.00	$10,952.00	OHS3L	(N)
13	$20,806.00	$11,558.00	OHS3L	(N)
14	$21,842.00	$12,134.00	OHS3L	(N)
15	$22,823.00	$12,679.00	OHS3L	(N)
16	$23,754.00	$13,196.00	OHS3L	(N)
17	$24,632.00	$13,685.00	OHS3L	(N)
18	$25,462.00	$14,146.00	OHS3L	(N)
19	$26,244.00	$14,580.00	OHS3L	(N)
20	$26,983.00	$14,990.00	OHS3L	(N)
21	$27,682.00	$15,378.00	OHS3L	(N)
22	$28,334.00	$15,742.00	OHS3L	(N)
23	$28,952.00	$16,085.00	OHS3L	(N)
24	$29,527.00	$16,404.00	OHS3L	(N)
25	$30,076.00	$16,709.00	OHS3L	(N)
26	$30,586.00	$16,992.00	OHS3L	(N)
27	$31,066.00	$17,258.00	OHS3L	(N)
28	$31,517.00	$17,509.00	OHS3L	(N)
29	$31,937.00	$17,742.00	OHS3L	(N)
30	$32,335.00	$17,964.00	OHS3L	(N)
31	$32,710.00	$18,172.00	OHS3L	(N)
32	$33,060.00	$18,366.00	OHS3L	(N)
33	$33,389.00	$18,550.00	OHS3L	(N)
34	$33,704.00	$18,725.00	OHS3L	(N)
35	$34,003.00	$18,890.00	OHS3L	(N)
36	$34,282.00	$19,045.00	OHS3L	(N)
37	$34,552.00	$19,195.00	OHS3L	(N)
38	$34,813.00	$19,340.00	OHS3L	(N)
39	$35,065.00	$19,481.00	OHS3L	(N)
40	$35,308.00	$19,615.00	OHS3L	(N)

E6. BELLSOUTH SWA SERVICE (N)

E6.8 Rates and Charges (Cont'd) (N)

E6.8.1 BellSouth SWA Transport (Cont'd) (N)

O. Channels for Use With BellSouth SWA Managed Shared Network Service (Cont'd) (N)

1. DS3 Service - Flat rate per Local Channel, per Aggregation Location. (Cont'd) (N)

(c) Zone 3 (Cont'd) (N)

Quantity of DS3s Per Aggregation Location	Month to Month/ 12 Month Rate	60 Month Rate	USOC	
41	$35,549.00	$19,750.00	OHS3L	(N)
42	$35,785.00	$19,880.00	OHS3L	(N)
43	$36,020.00	$20,011.00	OHS3L	(N)
44	$36,258.00	$20,143.00	OHS3L	(N)
45	$36,496.00	$20,275.00	OHS3L	(N)
46	$36,740.00	$20,411.00	OHS3L	(N)
47	$36,991.00	$20,550.00	OHS3L	(N)
48	$37,250.00	$20,694.00	OHS3L	(N)
49	$38,028.00	$21,126.00	OHS3L	(N)
50	$38,741.00	$21,522.00	OHS3L	(N)
51	$39,389.00	$21,882.00	OHS3L	(N)
52	$39,972.00	$22,206.00	OHS3L	(N)
53	$40,231.00	$22,350.00	OHS3L	(N)
54	$40,750.00	$22,638.00	OHS3L	(N)
55	$41,203.00	$22,890.00	OHS3L	(N)
56	$41,592.00	$23,106.00	OHS3L	(N)
57	$41,851.00	$23,250.00	OHS3L	(N)
58	$42,175.00	$23,430.00	OHS3L	(N)
59	$42,434.00	$23,574.00	OHS3L	(N)
60	$42,694.00	$23,718.00	OHS3L	(N)
61	$43,605.00	$24,225.00	OHS3L	(N)
62	$44,515.00	$24,730.00	OHS3L	(N)
63	$45,425.00	$25,235.00	OHS3L	(N)
64	$46,335.00	$25,740.00	OHS3L	(N)
65	$47,245.00	$26,245.00	OHS3L	(N)
66	$48,155.00	$26,750.00	OHS3L	(N)
67	$49,065.00	$27,255.00	OHS3L	(N)
68	$49,975.00	$27,760.00	OHS3L	(N)
69	$50,885.00	$28,265.00	OHS3L	(N)
70	$51,795.00	$28,770.00	OHS3L	(N)
71	$52,705.00	$29,275.00	OHS3L	(N)
72	$53,615.00	$29,780.00	OHS3L	(N)
73	$54,525.00	$30,285.00	OHS3L	(N)
74	$55,435.00	$30,790.00	OHS3L	(N)
75	$56,345.00	$31,295.00	OHS3L	(N)
76	$57,255.00	$31,800.00	OHS3L	(N)
77	$58,165.00	$32,305.00	OHS3L	(N)
78	$59,075.00	$32,810.00	OHS3L	(N)
79	$59,985.00	$33,315.00	OHS3L	(N)
80	$60,895.00	$33,820.00	OHS3L	(N)

E6. BELLSOUTH SWA SERVICE (N)

E6.8 Rates and Charges (Cont'd) (N)

E6.8.1 BellSouth SWA Transport (Cont'd) (N)

O. Channels for Use With BellSouth SWA Managed Shared Network Service (Cont'd) (N)

1. DS3 Service - Flat rate per Local Channel, per Aggregation Location. (Cont'd)

(c) Zone 3 (Cont'd) (N)

Quantity of DS3s Per Aggregation Location	Month to Month/ 12 Month Rate	60 Month Rate	USOC	
				(N)
81	**$61,805.00**	**$34,325.00**	**OHS3L**	(N)
82	**$62,715.00**	**$34,830.00**	**OHS3L**	(N)
83	**$63,625.00**	**$35,335.00**	**OHS3L**	(N)
84	**$64,535.00**	**$35,840.00**	**OHS3L**	(N)
85	**$65,445.00**	**$36,345.00**	**OHS3L**	(N)
86	**$66,355.00**	**$36,850.00**	**OHS3L**	(N)
87	**$67,265.00**	**$37,355.00**	**OHS3L**	(N)
88	**$68,175.00**	**$37,860.00**	**OHS3L**	(N)
89	**$69,085.00**	**$38,365.00**	**OHS3L**	(N)
90	**$69,995.00**	**$38,870.00**	**OHS3L**	(N)
91	**$70,905.00**	**$39,375.00**	**OHS3L**	(N)
92	**$71,815.00**	**$39,880.00**	**OHS3L**	(N)
93	**$72,725.00**	**$40,385.00**	**OHS3L**	(N)
94	**$73,635.00**	**$40,890.00**	**OHS3L**	(N)
95	**$74,545.00**	**$41,395.00**	**OHS3L**	(N)
96	**$75,455.00**	**$41,900.00**	**OHS3L**	(N)
97	**$76,365.00**	**$42,405.00**	**OHS3L**	(N)
98	**$77,275.00**	**$42,910.00**	**OHS3L**	(N)
99	**$78,185.00**	**$43,415.00**	**OHS3L**	(N)
100	**$79,095.00**	**$43,920.00**	**OHS3L**	(N)
101	**$80,005.00**	**$44,425.00**	**OHS3L**	(N)
102	**$80,915.00**	**$44,930.00**	**OHS3L**	(N)
103	**$81,825.00**	**$45,435.00**	**OHS3L**	(N)
104	**$82,735.00**	**$45,940.00**	**OHS3L**	(N)
105	**$83,645.00**	**$46,445.00**	**OHS3L**	(N)
106	**$84,555.00**	**$46,950.00**	**OHS3L**	(N)
107	**$85,465.00**	**$47,455.00**	**OHS3L**	(N)
108	**$86,375.00**	**$47,960.00**	**OHS3L**	(N)
109	**$87,285.00**	**$48,465.00**	**OHS3L**	(N)
110	**$88,195.00**	**$48,970.00**	**OHS3L**	(N)
111	**$89,105.00**	**$49,475.00**	**OHS3L**	(N)
112	**$90,015.00**	**$49,980.00**	**OHS3L**	(N)
113	**$90,925.00**	**$50,485.00**	**OHS3L**	(N)
114	**$91,835.00**	**$50,990.00**	**OHS3L**	(N)
115	**$92,745.00**	**$51,495.00**	**OHS3L**	(N)
116	**$93,655.00**	**$52,000.00**	**OHS3L**	(N)
117	**$94,565.00**	**$52,505.00**	**OHS3L**	(N)
118	**$95,475.00**	**$53,010.00**	**OHS3L**	(N)
119	**$96,385.00**	**$53,515.00**	**OHS3L**	(N)
120	**$97,295.00**	**$54,020.00**	**OHS3L**	(N)

E6. BELLSOUTH SWA SERVICE (N)

E6.8 Rates and Charges (Cont'd) (N)

E6.8.1 BellSouth SWA Transport (Cont'd) (N)

O. Channels for Use With BellSouth SWA Managed Shared Network Service (Cont'd) (N)

1. DS3 Service - Flat rate per Local Channel, per Aggregation Location. (Cont'd)

(c) Zone 3 (Cont'd) (N)

Quantity of DS3s Per Aggregation Location	Month to Month/ 12 Month Rate	60 Month Rate	USOC	
				(N)
121	$98,205.00	$54,525.00	OHS3L	(N)
122	$99,115.00	$55,030.00	OHS3L	(N)
123	$100,025.00	$55,535.00	OHS3L	(N)
124	$100,935.00	$56,040.00	OHS3L	(N)
125	$101,845.00	$56,545.00	OHS3L	(N)
126	$102,755.00	$57,050.00	OHS3L	(N)
127	$103,665.00	$57,555.00	OHS3L	(N)
128	$104,575.00	$58,060.00	OHS3L	(N)
129	$105,485.00	$58,565.00	OHS3L	(N)
130	$106,395.00	$59,070.00	OHS3L	(N)
131	$107,305.00	$59,575.00	OHS3L	(N)
132	$108,215.00	$60,080.00	OHS3L	(N)
133	$109,125.00	$60,585.00	OHS3L	(N)
134	$110,035.00	$61,090.00	OHS3L	(N)
135	$110,945.00	$61,595.00	OHS3L	(N)
136	$111,855.00	$62,100.00	OHS3L	(N)
137	$112,765.00	$62,605.00	OHS3L	(N)
138	$113,675.00	$63,110.00	OHS3L	(N)
139	$114,585.00	$63,615.00	OHS3L	(N)
140	$115,495.00	$64,120.00	OHS3L	(N)
141	$116,405.00	$64,625.00	OHS3L	(N)
142	$117,315.00	$65,130.00	OHS3L	(N)
143	$118,225.00	$65,635.00	OHS3L	(N)
144	$119,135.00	$66,140.00	OHS3L	(N)
145	$119,810.00	$66,560.00	OHS3L	(N)
146	$120,720.00	$67,070.00	OHS3L	(N)
147	$121,630.00	$67,570.00	OHS3L	(N)
148	$122,530.00	$68,080.00	OHS3L	(N)
149	$123,440.00	$68,580.00	OHS3L	(N)
150	$124,340.00	$69,080.00	OHS3L	(N)
151	$125,260.00	$69,590.00	OHS3L	(N)
152	$126,170.00	$70,090.00	OHS3L	(N)
153	$127,070.00	$70,600.00	OHS3L	(N)
154	$127,980.00	$71,100.00	OHS3L	(N)
155	$128,880.00	$71,600.00	OHS3L	(N)
156	$129,790.00	$72,110.00	OHS3L	(N)
157	$130,700.00	$72,610.00	OHS3L	(N)
158	$131,600.00	$73,120.00	OHS3L	(N)
159	$132,520.00	$73,620.00	OHS3L	(N)
160	$133,420.00	$74,120.00	OHS3L	(N)

E6. BELLSOUTH SWA SERVICE (N)

E6.8 Rates and Charges (Cont'd) (N)

E6.8.1 BellSouth SWA Transport (Cont'd) (N)

O. Channels for Use With BellSouth SWA Managed Shared Network Service (Cont'd) (N)

1. DS3 Service - Flat rate per Local Channel, per Aggregation Location. (Cont'd)

(c) Zone 3 (Cont'd) (N)

Quantity of DS3s Per Aggregation Location	Month to Month/ 12 Month Rate	60 Month Rate	USOC	
161	**$134,330.00**	**$74,630.00**	**OHS3L**	(N)
162	**$135,240.00**	**$75,130.00**	**OHS3L**	(N)
163	**$136,140.00**	**$75,640.00**	**OHS3L**	(N)
164	**$137,050.00**	**$76,140.00**	**OHS3L**	(N)
165	**$137,950.00**	**$76,640.00**	**OHS3L**	(N)
166	**$138,860.00**	**$77,150.00**	**OHS3L**	(N)
167	**$139,780.00**	**$77,650.00**	**OHS3L**	(N)
168	**$140,680.00**	**$78,160.00**	**OHS3L**	(N)
169	**$141,590.00**	**$78,660.00**	**OHS3L**	(N)
170	**$142,490.00**	**$79,160.00**	**OHS3L**	(N)
171	**$143,400.00**	**$79,670.00**	**OHS3L**	(N)
172	**$144,310.00**	**$80,170.00**	**OHS3L**	(N)
173	**$145,210.00**	**$80,680.00**	**OHS3L**	(N)
174	**$146,120.00**	**$81,180.00**	**OHS3L**	(N)
175	**$147,020.00**	**$81,680.00**	**OHS3L**	(N)
176	**$147,940.00**	**$82,190.00**	**OHS3L**	(N)
177	**$148,850.00**	**$82,690.00**	**OHS3L**	(N)
178	**$149,750.00**	**$83,200.00**	**OHS3L**	(N)
179	**$150,660.00**	**$83,700.00**	**OHS3L**	(N)
180	**$151,560.00**	**$84,200.00**	**OHS3L**	(N)
181	**$152,470.00**	**$84,710.00**	**OHS3L**	(N)
182	**$153,380.00**	**$85,210.00**	**OHS3L**	(N)
183	**$154,280.00**	**$85,720.00**	**OHS3L**	(N)
184	**$155,200.00**	**$86,220.00**	**OHS3L**	(N)
185	**$156,100.00**	**$86,720.00**	**OHS3L**	(N)
186	**$157,010.00**	**$87,230.00**	**OHS3L**	(N)
187	**$157,920.00**	**$87,730.00**	**OHS3L**	(N)
188	**$158,820.00**	**$88,240.00**	**OHS3L**	(N)
189	**$159,730.00**	**$88,740.00**	**OHS3L**	(N)
190	**$160,630.00**	**$89,240.00**	**OHS3L**	(N)
191	**$161,540.00**	**$89,750.00**	**OHS3L**	(N)
192	**$162,460.00**	**$90,250.00**	**OHS3L**	(N)

E6. BELLSOUTH SWA SERVICE (N)

E6.8 Rates and Charges (Cont'd) (N)

E6.8.1 BellSouth SWA Transport (Cont'd) (N)

O. Channels for Use With BellSouth SWA Managed Shared Network Service (Cont'd) (N)

2. DS1 Interoffice Channel - Per DS1

(a) Mileage Band 0 – 8: Fixed (N)

	Month to Month/ 12 Month Rate	60 Month Rate	USOC	
Zone 1	**$270.00**	**$110.00**	**1L5MS**	(N)
Zone 2	**$297.00**	**$130.00**	**1L5MS**	(N)
Zone 3	**$327.00**	**$180.00**	**1L5MS**	(N)

(b) Mileage Band 0 – 8: Per Mile (N)

Zone 1	**N/A**	**N/A**	**1L5MS**	(N)
Zone 2	**N/A**	**N/A**	**1L5MS**	(N)
Zone 3	**N/A**	**N/A**	**1L5MS**	(N)

(c) Mileage Band 9 – 25: Fixed (N)

Zone 1	**$450.00**	**$200.00**	**1L5MS**	(N)
Zone 2	**$495.00**	**$240.00**	**1L5MS**	(N)
Zone 3	**$545.00**	**$300.00**	**1L5MS**	(N)

(d) Mileage Band 9 – 25: Per Mile (N)

Zone 1	**N/A**	**N/A**	**1L5MS**	(N)
Zone 2	**N/A**	**N/A**	**1L5MS**	(N)
Zone 3	**N/A**	**N/A**	**1L5MS**	(N)

(e) Mileage Band Over 25 Miles: Fixed (N)

Zone 1	**$207.00**	**$115.00**	**1L5MS**	(N)
Zone 2	**$228.00**	**$126.50**	**1L5MS**	(N)
Zone 3	**$251.00**	**$138.00**	**1L5MS**	(N)

(f) Mileage Band Over 25 Miles: Per Mile (N)

Zone 1	**$15.00**	**$5.70**	**1L5MS**	(N)
Zone 2	**$17.00**	**$6.60**	**1L5MS**	(N)
Zone 3	**$19.00**	**$8.05**	**1L5MS**	(N)

E6. BELLSOUTH SWA SERVICE (N)

E6.8 Rates and Charges (Cont'd) (N)

E6.8.1 BellSouth SWA Transport (Cont'd) (N)

O. Channels for Use With BellSouth SWA Managed Shared Network Service (Cont'd) (N)

3. DS0 Interoffice Channel - Per DS0 (N)

(a) Mileage Band 0 - 8 Miles: Fixed (N)

	Month to Month/ 12 Month Rate	60 Month Rate	USOC	
All Zones	**$42.00**	**$22.00**	**1L5MS**	(N)

(b) Mileage Band 0 - 8 Miles: Per Mile (N)

All Zones	**N/A**	**N/A**	**1L5MS**	(N)

(c) Mileage Band 9 - 25 Miles: Fixed (N)

All Zones	**$69.00**	**$38.00**	**1L5MS**	(N)

(d) Mileage Band 9 - 25 Miles: Per Mile (N)

All Zones	**N/A**	**N/A**	**1L5MS**	(N)

(e) Mileage Band Over 25 Miles: Fixed (N)

All Zones	**$36.00**	**$20.00**	**1L5MS**	(N)

(f) Mileage Band Over 25 Miles: Per Mile (N)

All Zones	**$2.90**	**$1.40**	**1L5MS**	(N)

4. DS1 and DS0 Interfaces- Per Interface (N)

(a) DS1 (N)

Zone 1	**$63.00**	**$35.00**	**OHS1S**	(N)
Zone 2	**$69.00**	**$39.00**	**OHS1S**	(N)
Zone 3	**$76.00**	**$52.00**	**OHS1S**	(N)

(b) DS1 Message Trunk Interface (N)

Zone 1	**$165.00**	**$100.00**	**OHS1M**	(N)
Zone 2	**$185.00**	**$120.00**	**OHS1M**	(N)
Zone 3	**$210.00**	**$140.00**	**OHS1M**	(N)

(c) DS0 – per line side connection (N)

All Zones	**$33.00**	**$19.00**	**OHSOL**	(N)

(d) DS0 – per trunk side connection (N)

All Zones	**$33.00**	**$19.00**	**OHSOT**	(N)

E6.8.2 Reserved For Future Use (M)

E6. BELLSOUTH SWA SERVICE

E6.8 Rates and Charges (Cont'd)

E6.8.3 Local Switching

A. Local Switching Rates and Optional Features

1. Per Access Minute

	Rate	USOC	
(a) LS1 - BellSouth SWA FGA and BellSouth SWA FGB	**$.006979**	**NA**	(R)
(b) LS2 - BellSouth SWA FGC and BellSouth SWA FGD	**.006979**	**NA**	(R)
(c) LS3 - BellSouth SWA LSBSA and BellSouth SWA TSBSA 1	**.006770**	**NA**	(R)
(d) LS4 - BellSouth SWA TSBSA 2 and TSBSA 3	**.006770**	**NA**	(R)

2. Common Trunk Port Service

(a) Per Access Minute of Use	**.000800**	**NA**

3. Dedicated End Office trunk Port Service

	Monthly Rate	
(a) Per dedicated DS0/VG trunk port required	**$9.47**	**TDE0P**
(b) Per dedicated DS1 trunk port required	**139.98**	**TDE1P**

4. Common Switching Optional Features (BellSouth SWA FG Customers Only)[1]
   a. Hunt Group Arrangement, available with BellSouth SWA FGA
   Per Transmission Path Group
   b. Uniform Call Distribution Arrangement, available with BellSouth SWA FGA
   Per Transmission Path Group
   c. Nonhunting Numbers for use with Hunt Group Arrangements or U.C.D. Arrangement available with BellSouth SWA FGA
   Per Transmission Path
   d. Automatic Number Identification /Charge Number available with BellSouth SWA FGB, BellSouth SWA FGC and BellSouth SWA FGD[2]
   Per Transmission Path Group

5. Common Switching (BellSouth SWA FG and BellSouth SWA Basic Serving Arrangement Customers)[3]
   a. Call denial on line or hunt group, available with BellSouth SWA FGA
   Per Transmission Path or Transmission Path Group
   b. Service Code Denial on line or hunt group, available with BellSouth SWA FGA
   Per Transmission Path or Transmission Path Group
   c. Up to 7 Digit Outpulsing of Access Digits to IC, available with BellSouth SWA FGB
   Per Transmission Path Group
   d. Revertive Pulse Address Signaling, available with BellSouth SWA FGC
   Per Transmission Path Group
   e. Delay Dial Start-Pulsing Signaling, available with BellSouth SWA FGC
   Per Transmission Path Group
   f. Immediate Dial Pulse Address Signaling, available with BellSouth SWA FGC
   Per Transmission Path Group
   g. Dial Pulse Address Signaling, available with BellSouth SWA FGC
   Per Transmission Path Group
   h. Service Class Routing, available with BellSouth SWA FGC and BellSouth SWA FGD
   Per End Office and Access Tandem

Note 1: These Common Switching Optional Features are not available for BellSouth SWA Basic Serving Arrangement. See E6.8.3.A.4. for the appropriate BSE.

Note 2: Charge Number is applicable only to BellSouth SWA FGD.

Note 3: References to BellSouth SWA FGs will also include the applicable BellSouth SWA Basic Serving Arrangement as detailed in the matrix of E6.1.3.A.

E6. BELLSOUTH SWA SERVICE

E6.8 Rates and Charges (Cont'd)

E6.8.3 Local Switching (Cont'd)

A. Local Switching Rates and Optional Features (Cont'd)

5. Common Switching (BellSouth SWA and BellSouth SWA Basic Serving Arrangement Customers)[1] (Cont'd) (T)

i. Alternate Traffic Routing Multiple IC Terminal Locations, BellSouth SWA FGB, BellSouth SWA FGC and BellSouth SWA FGD Per End Office and Access Tandem Transmission Path Group and End Office Alternate Routing, available with BellSouth SWA FGB and BellSouth SWA FGD Per End Office and Access Tandem

j. Trunk Access Limitation Arrangement, available with BellSouth SWA FGC and BellSouth SWA FGD
Per End Office

k. Call Gapping Arrangement, available with BellSouth SWA FGD
Per End Office

l. Cut-through, available with BellSouth SWA FGD, per end office and access tandem.

m. AccuPulse® service Switching Capability, available with BellSouth SWA FGD only
Per Access Minute

n. Calling Party Number
Per end office, per trunk group

o. Carrier Selection Parameter
Per end office, per trunk group

p. Access Transport Parameter, available with BellSouth SWA FGD/BellSouth SWA TSBSA 3-64CCC only
Per end office per Di-Group

q. Call Screening
Per Transmission Path or Transmission Path Group

r. 950-XXXX Dialing Over BellSouth SWA FGD and BellSouth SWA TSBSA 3

Per 950-XXXX number per end office and access tandem trunk group equipped

6. Basic Service Elements (BellSouth SWA Basic Serving Arrangement Customers Only)[2] (T)

a. Chargeable

(1) Hunt Group Arrangement

	Monthly Rate	Nonrecurring Charge Initial	Nonrecurring Charge Subsequent	USOC
(a) Per Transmission Path[3]	**$.48**	**$-**	**$-**	**HTGPP**
(2) Uniform Call Distribution Arrangement				
(a) Per Transmission Path[3]	**1.56**	**-**	**-**	**A6TPP**
(3) Nonhunting Number for Use with Hunt Group Arrangement or Uniform Call Distribution Arrangement				
(a) Per Transmission Path[3]	**-**	**-**	**-**	**NHLPP**
(4) Simplified Message Desk Interface - SMDI				
(a) Per hunt group arrangement[4]	**518.38**	**320.00**	**320.00**	**AVA**

Note 1: References to BellSouth SWA FGs will also include the applicable BellSouth SWA Basic Serving Arrangement as detailed in the matrix of E6.1.3.A.

Note 2: Basic Service Element rates are in addition to basic Local Switching rates. Rates applicable to BellSouth SWA LSBSA only, except where noted.

Note 3: Appropriate rearrangement charges to be applied in lieu of subsequent nonrecurring charges.

Note 4: Rates and charges as specified in ***E6.8.1 of this Tariff*** also apply for this service. ®

(T)

® Registered Service Mark of BellSouth Intellectual Property Corporation

E6. BELLSOUTH SWA SERVICE

E6.8 Rates and Charges (Cont'd)

E6.8.3 Local Switching (Cont'd)

A. Local Switching Rates and Optional Features (Cont'd)

6. Basic Service Elements (BellSouth SWA Basic Serving Arrangement Customers Only)[1] (Cont'd) (T)

a. Chargeable (Cont'd)

(5) Surrogate Client Number

	Monthly Rate	Nonrecurring Charge Initial	Nonrecurring Charge Subsequent	USOC
(a) Per Number	**$6.41**	**$3.00**	**$3.00**	**SMV**

(6) Bulk Calling/Line Information Delivery - BCLID[2]

(a) Per Arrangement	**-**	**59.00**	**59.00**	**NXK**
			Rate	**USOC**
(b) Per Message			**$.03493**	**NA**

(7) Queuing

	Monthly Rate	Nonrecurring Charge Initial	Nonrecurring Charge Subsequent	USOC
(a) Per Multiline Hunt Group	**$21.72**	**$66.00**	**$66.00**	**QLMHG**
(b) Per Multiline Hunt Group with Delay Announcement	**77.36**	**66.00**	**66.00**	**QLHDA**
(c) Per Multiline Hunt Group with Call Waiting Lamps[2]	**40.51**	**66.00**	**66.00**	**QLHCW**
(d) Per Multiline Hunt Group with Delay Announcement and Call Waiting Lamps[2]	**96.15**	**66.00**	**66.00**	**QLHGD**
(e) Per Line Arranged for Queuing	**-**	**2.00**	**2.00**	**QSC**
(f) Per Queue Slot	**-**	**-**	**-**	**QSCPQ**
(g) Delay Announcement, per channel	**45.52**	**-**	**-**	**BEXPC**
(h) Delay Announcement, per trunk	**10.14**	**-**	**-**	**BEXPT**
(i) Music After Delay Announcement, per channel[2]	**49.29**	**-**	**-**	**BE2PC**
(j) Music After Delay Announcement, per trunk[2]	**26.16**	**-**	**-**	**BE2PT**
(k) Call Waiting Indication, per unique timing state[2]	**18.79**	**-**	**-**	**A7G**

(8) User Transfer

(a) Per Transmission Path	**2.62**	**3.00**	**3.00**	**E13**
(b) Per Transmission Path with SMDI	**2.62**	**3.00**	**3.00**	**E13UT**

Note 1: Basic Service Element rates are in addition to basic Local Switching rates. Rates applicable to BellSouth SWA LSBSA only, except where noted.

Note 2: Rates and charges as specified in ***E6.8.1 of this Tariff*** also apply for this service. (T)

E6. BELLSOUTH SWA SERVICE

E6.8 Rates and Charges (Cont'd)

E6.8.3 Local Switching (Cont'd)

A. Local Switching Rates and Optional Features (Cont'd)

6. Basic Service Elements (BellSouth SWA Basic Serving Arrangement Customers Only)[1] (Cont'd) (T)

a. Chargeable (Cont'd)

(9) Make Busy/Night Transfer[2]

	Monthly Rate	Nonrecurring Charge Initial	Nonrecurring Charge Subsequent	USOC
(a) Per Arrangement	**$8.33**	**$31.00**	**$31.00**	**A9ANT**
(b) Per Customized Central Office Announcement	**67.95**	**22.00**	**22.00**	**A9ACC**

(10) Direct Inward Dialing (DID) or DID/DOD Access Service with BellSouth SWA LSBSA

(a) Establishment of DID with BellSouth SWA LSBSA BellSouth SWA service, including the First Group of 20 DID Numbers	**.01**	**53.00**	**-**	**NDZ**
(b) Each Additional Group of 20 DID Numbers	**.01**	**2.00**	**2.00**	**ND4**
(c) Establishment of two-way Line-Side service, each	**-**	**20.00**	**-**	**NEF**
(d) DID or DID/DOD Trunk Termination, including Dial Pulse Signaling, each	**33.50**	**36.00**	**-**	**NDT**
(e) DTMF Signaling, per trunk termination	**26.54**	**-**	**-**	**S5DBD**
(f) MF Signaling, per trunk termination	**.35**	**-**	**-**	**S5MBD**

(11) Automatic Number Identification/Charge Number (BellSouth SWA TSBSA only)[3]

(a) Per Trunk Group[4]	**-**	**-**	**-**	**NR4CN**
			Rate	**USOC**
(b) Per ANI/CN Delivered			**$.00019**	**NA**

(12) Answer Supervision

	Monthly Rate	Nonrecurring Charge Initial	Nonrecurring Charge Subsequent	USOC
(a) Per Transmission Path	**$2.33**	**$2.00**	**$2.00**	**USW1X**

(13) BellSouth® Remote Access Service, One Way, Per Dial Tone Office[5]

(a) Initial Request	**23,460.00**	**13,800.00**	**-**	**RAQ11**
(b) Subsequent Request	**1,955.00**	**-**	**1,150.00**	**RAQ1S**

Note 1: Basic Service Element rates are in addition to basic Local Switching rates. Rates applicable to BellSouth SWA LSBSA only, except where noted.

Note 2: Rates and charges as specified in E6.8.1. ***of this Tariff*** also apply for this service. (T)

Note 3: Charge Number is applicable only to BellSouth SWA TSBSA 3.

Note 4: Appropriate rearrangement charges to be applied in lieu of subsequent nonrecurring charges.

Note 5: One BellSouth® Remote Access Service port per BellSouth® SWA LSBSA.

® BellSouth is a registered trademark of BellSouth Intellectual Property Corporation

E6. BELLSOUTH SWA SERVICE

E6.8 Rates and Charges (Cont'd)

E6.8.3 Local Switching (Cont'd)

A. Local Switching Rates and Optional Features (Cont'd)

7. Common Switching Optional Features for Use with Dedicated Access Lines (BellSouth SWA FG and BellSouth SWA Basic Serving Arrangement Customers)[1] (T)

a. Band Advance Arrangement for Dedicated Access Line Service, available with BellSouth SWA FGC and BellSouth SWA FGD Per Transmission Path Group

b. End Office End User Line Service Screening on Dedicated Access Line Service, available with BellSouth SWA FGC and BellSouth SWA FGD[2] Per Transmission Path

c. Hunt Group Arrangement for Dedicated Access Lines Service, available with BellSouth SWA FGC and BellSouth SWA FGD Per Transmission Path Group

d. Uniform Call Distribution Arrangement for Dedicated Access Line Service, available withBellSouth SWA FGC and BellSouth SWA FGD Per Transmission Path Group

e. Nonhunting Number for use with Hunt Group Arrangement or U.C.D. Arrangement for Dedicated Access Line Service, available with BellSouth SWA FGC and BellSouth SWA FGD Per Transmission Path

8. Basic Service Element for Use with Dedicated Access Lines (BellSouth SWA Basic Serving Arrangement Customers Only)[3] (T)

a. Chargeable

(1) Direct Inward Dialing (DID) or DID/DOD Access Service with BellSouth SWA Basic Serving Arrangements for Use with Dedicated Access Lines[4]

		Monthly Rate	Nonrecurring Charge Initial	Nonrecurring Charge Subsequent	USOC
(a)	Establishment of DID with Dedicated Access Line Service, including the First Group of 20 DID Numbers	**$.01**	**$62.00**	**$-**	**NDZ**
(b)	Each Additional Group of 20 DID Numbers	**.01**	**3.00**	**3.00**	**ND4**
(c)	Establishment of two-way Line-Side service, each	**-**	**20.00**	**-**	**NEF**
(d)	DID or DID/DOD Trunk Termination, including Dial Pulse Signaling, each	**33.50**	**36.00**	**-**	**NDT**
(e)	DTMF Signaling, per trunk termination	**26.54**	**-**	**-**	**S5DBD**

Note 1: References to Feature Groups will also include the applicable BellSouth SWA Basic Serving Arrangement as detailed in the matrix of E6.1.3.A.

Note 2: This feature is required for originating only Dedicated Access Lines.

Note 3: Basic Service Element rates are in addition to basic Local Switching rates. Rates applicable to BellSouth SWA LSBSA only, except where noted.

Note 4: Basic Service Element Rates are in addition to Section E7. ***of this Tariff***, Special Access Rates. (T)

E6. BELLSOUTH SWA SERVICE

E6.8 Rates and Charges (Cont'd)

E6.8.3 Local Switching (Cont'd)

A. Local Switching Rates and Optional Features (Cont'd)

8. Basic Service Element for Use with Dedicated Access Lines (BellSouth SWA Basic Serving Arrangement Customers Only)[1] (Cont'd) (T)

a. Chargeable (Cont'd)

(1) (Cont'd)[2]

	Monthly Rate	Nonrecurring Charge Initial	Nonrecurring Charge Subsequent	USOC
(f) MF Signaling, per trunk termination	**$.35**	**$-**	**$-**	**S5MBD**

9. Switched Transport Termination Nonchargeable Options (T)

a. Line Side Terminations for BellSouth SWA FGA and BellSouth SWA LSBSA

(1) Two-way Operation

- Dial Pulse with Loop Start
- Dial Pulse with Ground Start
- DTMF with Loop Start
- DTMF with Ground Start

Note 1: Basic Service Element rates are in addition to basic Local Switching rates. Rates applicable to BellSouth SWA LSBSA only, except where noted.

Note 2: Basic Service Element Rates are in addition to Section E7. ***of this Tariff***, Special Access Rates. (T)

E6. BELLSOUTH SWA SERVICE

E6.8 Rates and Charges (Cont'd)

E6.8.3 Local Switching (Cont'd)

A. Local Switching Rates and Optional Features (Cont'd)

9. Switched Transport Termination Nonchargeable Options (Cont'd) (T)

a. Line Side Terminations for BellSouth SWA FGA and BellSouth SWA LSBSA (Cont'd)

(2) Terminating Operation

- Dial Pulse with Loop Start
- Dial Pulse with Ground Start
- DTMF with Loop Start
- DTMF with Ground Start

(3) Originating Operation

- Loop Start
- Ground Start

b. Standard Trunk for Originating, Terminating or Two-way operation, available with BellSouth SWA FGB, BellSouth SWA FGC, BellSouth SWA FGD and BellSouth SWA TSBSA.

c. Rotary Dial Station Signaling Trunk, available ***with BellSouth*** SWA FGB and BellSouth SWA TSBSA 1 (T)

d. Operator Trunk, Coin, Non-Coin or Combined Coin and Non-Coin, available with BellSouth SWA FGC and BellSouth SWA TSBSA 2; also available with BellSouth SWA FGC, BellSouth SWA FGD, BellSouth SWA TSBSA 2 or TSBSA 3 when used in conjunction with BellSouth Operator Transfer Service

e. Operator Trunk, Full Feature Arrangement, available with BellSouth SWA FGD and BellSouth SWA TSBSA 3

B. Line Terminations

1. Dedicated Access Line Service Terminations Nonchargeable Options

a. Line Side Terminations:

(1) Originating Only Loop Start, Line Side Connection, with DTMF Address Signaling
Per Transmission Path

(2) Originating Only Loop Start, Line Side Connection, with Dial Pulse Address Signaling
Per Transmission Path

(3) Originating Only Ground Start, Line Side Connection, with DTMF Address Signaling
Per Transmission Path

(4) Originating Only Ground Start, Line Side Connection, with Dial Pulse Address Signaling
Per Transmission Path

(5) Terminating Only Loop Start, Line Side Connection
Per Transmission Path

(6) Terminating Only Ground Start, Line Side Connection
Per Transmission Path

E6. BELLSOUTH SWA SERVICE (T)

E6.8 Rates and Charges (Cont'd)

E6.8.3 Local Switching (Cont'd)

B. Line Terminations (Cont'd)

1. Dedicated Access Line Service Terminations Nonchargeable Options (Cont'd)

b. Trunk Side Terminations:

(1) Terminating Only Trunk Side Connection for forwarding of Dialed Number Identification to End User Per Transmission Path

C. ***BellSouth SWA*** 900 Service NXX Activation Charge (T)

1. Per Company End Office Switch and Access Tandem in which translations are required

		Nonrecurring Charge	USOC
(a)	First NXX Code submitted on ASR	**$43.61**	**NA**
(b)	Additional NXX Codes submitted on same ASR	**21.51**	**NA**

E6. BELLSOUTH SWA SERVICE (T)

E6.8 Rates and Charges (Cont'd)

E6.8.4 BellSouth SWA 8XX Toll Free Dialing Ten Digit Screening Service

A. ***BellSouth SWA*** 8***XX Toll Free Dialing*** Ten Digit Screening Service (T)

1. Per 800 Call Utilizing ***BellSouth SWA*** 8***XX Toll Free Dialing*** Ten Digit Screening service with 800 Number Delivery (T)

	Rate	USOC
(a) Per query	**$.0040**	**NA**

2. Per 800 Call Utilizing ***BellSouth SWA*** 8***XX Toll Free Dialing*** Ten Digit Screening service with 800 Number Delivery for 800 Numbers with Optional Complex Feature, i.e., Call Handling and Destination Features[1] (T)

(a) Per query	**.0045**	**NA**

3. Per 800 Call Utilizing ***BellSouth SWA*** 8***XX Toll Free Dialing*** Ten Digit Screening service with POTS Number Delivery (T)

(a) Per query	**.0040**	**NA**

4. Per 800 Call Utilizing ***BellSouth SWA*** 8***XX Toll Free Dialing*** Ten Digit Screening service with POTS Number Delivery for 800 Numbers with Optional Complex Feature, i.e., Call Handling and Destination Features[1] (T)

(a) Per query	**.0045**	**NA**

E6.8.5 Reserved for Future Use

E6.8.6 Information Surcharge

1. Information Surcharge

(a) Per 100 Access minutes	**.03741**	**NA**

E6.8.7 Reserved for Future Use

E6.8.8 Service Rearrangements

A. Change of Service

1. Submitted on the Same ASR[2]

	Nonrecurring Charge	USOC
(a) Per request	**$92.00**	**NRBFA**

Note 1: This element cannot be billed prior to July 1, 1993. Prior to July 1, 1993, the applicable query rate element, with 800 number delivery or with POTS number delivery, will be applied.

Note 2: Services requested on multiple ASRs will be treated as one request when requirements, as specified in E6.1.7, are met.

E6. BELLSOUTH SWA SERVICE (T)

E6.8 Rates and Charges (Cont'd)

E6.8.8 Service Rearrangements (Cont'd)

B. ***BellSouth SWA FG***A and ***BellSouth SWA*** LSBSA (T)

1. Line Side Service

	Nonrecurring Charge	USOC
(a) Per transmission path[1]	**$10.00**	**NRBFB**

C. ***BellSouth SWA FG***B, ***BellSouth SWA FG***C, ***BellSouth SWA FG***D and ***BellSouth SWA*** TSBSA (T)

1. Trunk Side Service

(a) Per transmission path[1]	**5.00**	**NRBFC**

D. Common Block

1. Translations Related

(a) Per end office and tandem office affected[1,2]	**62.00**	**NRBFD**

E. ***BellSouth SWA*** 500 service (T)

1. Change in dialing capability

(a) Per NXX per end office and tandem office affected[1]	**15.00**	**NRBFG**

F. 64 CCC Option

1. ***BellSouth SWA*** FGD or ***BellSouth SWA*** TSBSA 3 with ***BellSouth SWA*** CCSAC (T)

	Nonrecurring Charge First	Nonrecurring Charge Additional	USOC
(a) Per transmission path[1]	**$470.00**	**$76.00**	**NRBFF**

G. ***BellSouth SWA*** Transport (T)

1. Per arrangement

(a) DS1	**866.97**	**486.83**	**NRBD1**
(b) DS3	**870.50**	**427.88**	**NRBD3**

Note 1: This charge is in addition to that set forth in E6.8.8.A.

Note 2: For translation changes to allow 950 dialing on existing ***BellSouth SWA*** FGD trunks, this charge is applied per each 950 number converted, per end office and tandem office affected (T)

E6. BELLSOUTH SWA SERVICE (T)

E6.8 Rates and Charges (Cont'd)

E6.8.9 Transfer of Service

A. Transfer of Service

1. Billing Account Number

	Nonrecurring Charge	USOC
(a) Each	**$170.00**	**NRBQA**

B. ***BellSouth SWA FG***A and ***BellSouth SWA*** LSBSA (T)

1. Line Side Service

(a) Per transmission path[1]	**7.00**	**NRBQL**

C. ***BellSouth SWA FG***B, ***BellSouth SWA FG***C, D and ***BellSouth SWA*** TSBSA (T)

1. Trunk Side Service

(a) Per transmission path[1]	**8.00**	**NRBQT**

E6.8.10 Shared Network Arrangement

A. Coordination and Processing Charges

1. Coordination Charge

	Monthly Rate	Nonrecurring Charge	USOC
(a) Per Arrangement	**$-**	**$69.21**	**NRBSN**

2. Processing Charge

(a) Per Service Order	**-**	**6.53**	**ORC**

E6.8.11 Reserved for Future Use

E6.8.12 Reserved for Future Use

E6.8.13 BellSouth SWA 500 Service (T)

A. ***BellSouth SWA*** 500 service (T)

1. 500 Customer Identification

	Rate	USOC
(a) Per call	**$.01**	**NA**

2. Service Activation Charge - Per Company End Office Switch or Access Tandem in which translations are required

	Nonrecurring Charge	USOC
(a) First NXX Code submitted on ASR	**$40.00**	**N5G1X**
(b) Additional NXX Code submitted on ASR	**20.00**	**N5GAX**

Note 1: This charge is in addition to that set forth in E6.8.9.A.

E7. SPECIAL ACCESS (A.K.A. BELLSOUTH SPA) SERVICE

CONTENTS

E7.1	**General**	1	
E7.1.1	Channel Types	1	
E7.1.2	Rate Categories	2	
E7.1.3	Service Configurations	4	
E7.1.4	Alternate Use	6	
E7.1.5	Special Facilities Routing	6	
E7.1.6	Design Layout Report	6	
E7.1.7	Acceptance Testing	6	
E7.1.8	Ordering Options and Conditions	6	
E7.2	**Service Descriptions**	8	
E7.2.1	Reserved for Future Use	8	
E7.2.2	Telegraph Grade (a.k.a. BellSouth SPA Telegraph) Service	9	
E7.2.3	Voice Grade (a.k.a. BellSouth SPA DS0 VG) Service	9	
E7.2.4	Wired Music Service	17	
E7.2.5	Digital Data Access (a.k.a. BellSouth SPA DS0 Digital Data) Service	18	
E7.2.6	High Capacity (a.k.a. BellSouth SPA High Capacity) Service	19.1	
E7.2.7	Reserved for Future Use	21.1	
E7.2.8	Reserved for Future Use	21.1	
E7.2.9	Reserved for Future Use	21.1	
E7.2.10	Reserved for Future Use	21.1	
E7.2.11	Reserved for Future Use	21.1	
E7.2.12	Reserved for Future Use	21.1	
E7.2.13	Reserved for Future Use	21.1	
E7.2.14	(DELETED)		
E7.2.15	Derived Data Channel Service	21.3	
E7.2.16	SMARTRing Service (a.k.a. BellSouth ***Dedicated*** Ring)	21.4	(T)
E7.2.17	Reserved For Future Use	21.6	(N)
E7.2.18	BellSouth Metro Ethernet service	21.7	(N)
E7.3	**Channel Interface and Network Channel Codes**	22	
E7.3.1	General	22	
E7.3.2	Glossary of Channel Interface Codes and Options	22	
E7.3.3	Impedance	25	
E7.3.4	Digital Hierarchy and Channel Interface Codes (4DS)	26	
E7.3.5	Service Designator/Network Channel Code Conversion Table	26	

All BellSouth marks contained herein and as set forth in the trademarks and servicemarks section of this Tariff are owned by BellSouth Intellectual Property Corporation.

E7. SPECIAL ACCESS (A.K.A. BELLSOUTH SPA) SERVICE

CONTENTS

E7.4	**Rate Regulations**	27	
E7.4.1	Types of Rates and Charges	27	
E7.4.2	Surcharge for Special Access (a.k.a. BellSouth SPA) Service	29	
E7.4.3	Message Station Equipment Recovery	31	
E7.4.4	Minimum Periods	31	
E7.4.5	Moves	31	
E7.4.6	Mileage Measurement	32	
E7.4.7	Facility Hubs	32	
E7.4.8	Shared Use Analog and Digital High Capacity	33	
E7.4.9	Multijurisdictional WATS Access Line (a.k.a. BellSouth SPA WATS Line) "1+" and "0" IntraLATA Usage	33.0.1	
E7.4.10	Reserved for Future Use	33.0.1	
E7.4.11	Reserved for Future Use	33.0.1	
E7.4.12	FlexServ Service (a.k.a. BellSouth SPA Customer Reconfiguration)	33.1	(T)
E7.4.13	Derived Data Channel (a.k.a. BellSouth SPA Derived Data Channel) Service (DDCS)	33.4	
E7.4.14	Digital Data Access (a.k.a. BellSouth SPA DS0 Digital Data) Service (DDAS)	33.4	
E7.4.15	Zone Pricing	33.5	
E7.4.16	SMARTRing service (a.k.a. BellSouth Dedicated Ring)	33.6	(T)
E7.4.17	Reserved for Future Use	33.9	(N)
E7.4.18	Reserved for Future Use	33.9	(N)
E7.4.19	Reserved for Future Use	33.9	(N)
E7.4.20	Reserved for Future Use	33.9	(N)
E7.4.21	Reserved for Future Use	33.9	(N)
E7.4.22	Reserved for Future Use	33.9	(N)
E7.4.23	Reserved for Future Use	33.9	(N)
E7.4.24	Reserved for Future Use	33.9	(N)
E7.4.25	Reserved for Future Use	33.9	(N)
E7.4.26	Reserved for Future Use	33.9	(N)
E7.4.27	Reserved for Future Use	33.9	(N)
E7.4.28	Reserved for Future Use	33.9	(N)
E7.4.29	Reserved for Future Use	33.9	(N)
E7.4.30	Reserved for Future Use	33.9	(N)
E7.4.31	Reserved for Future Use	33.9	(N)
E7.4.32	BellSouth Metro Ethernet service	33.10	(N)
			(M)

Material previously appearing on this page now appears on page(s) 3 of this section.

All BellSouth marks contained herein and as set forth in the trademarks and servicemarks section of this Tariff are owned by BellSouth Intellectual Property Corporation.

E7. SPECIAL ACCESS (A.K.A. BELLSOUTH SPA) SERVICE

CONTENTS

E7.5	**Rates and Charges**	34	(M)
E7.5.1	Reserved For Future Use	34	(M)
E7.5.2	Telegraph Grade (a.k.a. BellSouth SPA Telegraph) Service	34	(M)
E7.5.3	Voice Grade (a.k.a. BellSouth SPA DS0 VG) Service	35	(M)
E7.5.4	Wired Music Service	39	(M)
E7.5.5	Digital Data Access (a.k.a. BellSouth SPA DS0 Digital Data) Service	41	(M)
E7.5.6	High Capacity (a.k.a. BellSouth SPA High Capacity) Service	42.1	(M)
E7.5.7	Message Station Equipment Recovery Charge	46	(M)
E7.5.8	Special Access (a.k.a. BellSouth SPA) Surcharge	46	(M)
E7.5.9	Reserved for Future Use	46	(M)
E7.5.10	Reserved for Future Use	46	(M)
E7.5.11	Reserved for Future Use	46	(M)
E7.5.12	Reserved for Future Use	46	(M)
E7.5.13	Transfer of Service	46	(M)
E7.5.14	(DELETED)		(M)
E7.5.15	Derived Data Channel (a.k.a. BellSouth SPA Derived Data Channel) Service	46.2	(M)
E7.5.16	FlexServ Service (a.k.a. BellSouth SPA Customer Reconfiguration)	46.2	(T)(M)
E7.5.17	Reserved for Future Use	46.3	(M)
E7.5.18	SMARTRing service (a.k.a. BellSouth Dedicated Ring)	46.4	(T)(M)
E7.5.19	Reserved for Future Use	46.7	(N)
E7.5.20	Reserved for Future Use	46.7	(N)
E7.5.21	Reserved for Future Use	46.7	(N)
E7.5.22	BellSouth Metro Ethernet service	46.7	(N)
E7.6	**ICB Rates and Charges**	47	(M)
E7.7	**Custom Network (a.k.a. BellSouth Custom Network) Service**	47	
E7.7.1	General	47	
E7.7.2	Custom Network Service Arrangement I	47	

Material appearing on this page previously appeared on page(s) 2 of this section.

All BellSouth marks contained herein and as set forth in the trademarks and servicemarks section of this Tariff are owned by BellSouth Intellectual Property Corporation.

E7. SPECIAL ACCESS (A.K.A. BELLSOUTH SPA) SERVICE

E7.1 General

Special Access (a.k.a. BellSouth SPA) service provides a transmission path to connect customer designated premises[1], either directly or through a Company hub where bridging or multiplexing functions are performed. Special Access (a.k.a. BellSouth SPA) service[2] includes all exchange access not utilizing Company end office switches.

The connections provided by Special Access (a.k.a. BellSouth SPA) service can be either analog or digital. Analog connections are differentiated by spectrum and bandwidth. Digital connections are differentiated by bit rate.

E7.1.1 Channel Types

A. There are eight types of channels used to provide Special Access (a.k.a. BellSouth SPA) services. Each type has its own characteristics. All are subdivided by one or more of the following:

- Transmission specifications
- Bandwidth
- Speed (i.e., bit rate)
- Spectrum

B. Customers can order a basic channel and select from a list of available transmission parameters and channel interfaces, those that they desire to meet specific communications requirements.

C. For purposes of ordering channels, each has been identified as a type of Special Access (a.k.a. BellSouth SPA) service. However, such identification is not intended to limit a customer's use of the channel nor to imply that the channel is limited to a particular use. For example, if a customer's equipment is capable of transmitting voice over a channel that is identified as Metallic (a.k.a. BellSouth SPA Metallic) service in this Tariff, there is no restriction against doing so.

D. Following is a brief description of each type of channel:

1. Telegraph (a.k.a. BellSouth SPA Telegraph) Grade - a channel for the transmission of binary signals at rates of 0 to 75 baud or 0 to 150 baud.
2. Voice Grade (a.k.a. BellSouth SPA DS0 VG) - a channel for the transmission of analog signals within an approximate bandwidth of 300-3000 Hz.
3. WATS Access Line (a.k.a. BellSouth SPA WATS Line) (WAL) - a channel from a customer designated premises to a WATS serving office for 800, WATS or similar service.
4. Wired Music - a channel for the transmission of audio signals. The nominal frequency bandwidths are from 200 to 3500 Hz, from 100 to 5000 Hz or from 50 to 8000 Hz.
5. **(DELETED)** (D)
6. Digital Data Access (a.k.a. BellSouth SPA DS0 Digital Data) - a channel for the digital transmission of synchronous serial data at rates of 2.4, 4.8, 9.6, 19.2, 56.0 or 64.0 Kbps.
7. High Capacity (a.k.a. BellSouth SPA High Capacity) - a channel for the transmission of isochronous serial digital data at rates of 1.544, 3.152, 6.312, or 44.736 Mbps.
8. Derived Data Channel (a.k.a. BellSouth SPA Derived Data Channel) - a digital data channel derived from a two-wire local exchange facility that transmits voice and data signals simultaneously.

Note 1: Company provided Centrex Type Services systems and Answering Service Concentrators are considered to be customer premises for purposes of administering regulations and rates contained in this Tariff.

Note 2: For purposes of administering the surcharge regulations, WATS (a.k.a. BellSouth SPA WATS Line) access lines are considered to be Special Access (a.k.a. BellSouth SPA) service.

E7. SPECIAL ACCESS (A.K.A. BELLSOUTH SPA) SERVICE

E7.1 General (Cont'd)

E7.1.1 Channel Types (Cont'd)

E. Detailed descriptions of each of the channel types are provided in E7.2 following.

1. The customer also has the option of ordering digital high capacity facilities (i.e., 1.544 Mbps, 3.152 Mbps, 6.312 Mbps, and 44.736 Mbps) to a Company Hub for channelization to individual channels of a lower capacity. Descriptions of the types of channelization available at the hubs, as well as the number of individual channels which may be derived from each type of facility are set forth in E7.2 following. Additionally, the customer may specify optional features for the individual channels derived from the facility to further tailor the channel to meet specific communications requirements. Descriptions of the optional features and functions available are also set forth in E7.2 following.

2. For example, a customer may order a 44.736 Mbps facility from a customer designated premises to a Company Hub for channelization to twenty-eight 1.544 Mbps channels. The 1.544 Mbps channels may be further channelized at the same or a different Hub to Voice Grade (a.k.a. BellSouth SPA DS0 VG) channels or may be extended to other customer designated premises. Optional features may be added to either the 1.544 Mbps or the Voice Grade (a.k.a. BellSouth SPA DS0 VG) channels.

E7.1.2 Rate Categories

A. There are ***four*** basic rate categories which apply to Special Access (a.k.a. BellSouth SPA) service: (C)

1. Local Channels (described in B. following)
2. Interoffice Channel (described in C. following)
3. Optional Features and Functions (described in D. following)
4. Self-healing Multi-nodal Alternate Route Topology Ring (SMARTRing® service [a.k.a BellSouth Dedicated Ring]) (described in F. following) (N)

B. Local Channel

The Local Channel rate category provides for the communications path between the demarcation point at a customer designated premises and the serving wire center of that premises. Included as part of the Local Channel is a standard channel interface arrangement which defines the technical characteristics associated with the type of facilities to which the access service is to be connected at the Point of Termination (POT) and the type of signaling capability, if any. The signaling capability itself is provided as an optional feature as set forth in C. following. One Local Channel charge applies per customer designated premises at which the channel is terminated. This charge will apply even if the customer premises and the serving wire center are co-located in a Company building.

C. Interoffice Channel

The Interoffice Channel rate category provides for the transmission facilities between the serving wire centers associated with two customer designated premises, between a serving wire center associated with a customer designated premises and a Company Hub or between two Company Hubs. Interoffice Channel mileage is portrayed in mileage bands. There are two rates that apply for each band, i.e., a flat rate per band and a rate per mile.

D. Optional Features and Functions

The Optional Features and Functions rate category provides for optional features and functions which may be added to a Special Access (a.k.a. BellSouth SPA) service to improve its quality or utility to meet specific communications requirements. These are not necessarily identifiable with specific equipment, but rather represent the end result in terms of performance characteristics which may be obtained. These characteristics may be obtained by using various combinations of equipment. Although the equipment necessary to perform a specified function may be installed at various locations along the path of the service, they will be charged for as a single rate element.

® Registered Service Mark of BellSouth Corporation

E7. SPECIAL ACCESS (A.K.A. BELLSOUTH SPA) SERVICE

E7.1 General (Cont'd)

E7.1.2 Rate Categories (Cont'd)

D. Optional Features and Functions (Cont'd)

Examples of Optional Features and Functions that are available include, but are not limited to, the following:

- Signaling Capability
- Hubbing Functions
- Conditioning
- FlexServ® service (a.k.a. BellSouth SPA Customer Reconfiguration)
- Data Over Voice Channel

E. A Hub is a Company designated serving wire center at which bridging and/or channelization functions are performed. The bridging functions performed are to connect three or more customer designated premises in a multipoint arrangement. The channelization functions are to channelize analog or digital facilities to individual services requiring a lower capacity. National Exchange Carrier Association Tariff FCC No. 4 identifies serving wire centers, Hub locations and the type of bridging and/or channelization functions available.

Descriptions for each of the available Optional Features and Functions are set forth in E7.2 following.

F. Self-healing Multi-nodal Alternate Route Topology Ring (SMARTRing® service [a.k.a. BellSouth Dedicated Ring]) (N)

1. Customer Node (N)

Customer Nodes provide ring switching capabilities at customer designated locations other than Telephone Company Premises that are part of SMARTRing® service (a.k.a. BellSouth Dedicated Ring). This rate element offers OC-3, OC-3+, OC-12, OC-48, or OC-48+ network capacities. An OC-1 network capacity is available only in an Overlay Ring Arrangement riding the customer's host OC-12, OC-48, or OC-48+ SMARTRing® service (a.k.a. BellSouth Dedicated Ring) installed on or after June 3, 1994. A summary of the channel interfaces available with each node are specified in E7.2.16.A following. (N)

2 Customer Channel Interface (N)

A Customer Channel Interface provides DS1, DS3, STS-1 electrical channelization and/or OC-3 and/or OC-12 optical channelization that may take place at each Customer Node of SMARTRing® service (a.k.a. BellSouth Dedicated Ring). The Customer Channel Interface rate element applies for every interface capacity that originates or terminates at a Customer Node. A summary of the channel interfaces available with each node are specified in E7.2.16.A. following. (N)

3. Central Office Node (N)

Central Office Nodes provide ring switching capabilities at Telephone Company Central Offices that are a part of SMARTRing® service (a.k.a. BellSouth Dedicated Ring). This rate element offers OC-3, OC-3+, OC-12, OC-48, and OC-48+ network capacities. An OC-1 network capacity is available only in an Overlay Ring Arrangement riding the customer's host OC-12, OC-48 or OC-48+ SMARTRing® service (a.k.a. BellSouth Dedicated Ring) installed on or after June 3, 1994. A summary of the channel interfaces available with each node are specified in E7.2.16.A. following. (N)

4. Central Office Channel Interface (N)

A Central Office Channel Interface provides DS1, DS3, STS-1 electrical channelization and/or OC-3 and/or OC-12 optical channelization that may take place at each Central Office Node located on SMARTRing® service (a.k.a. BellSouth Dedicated Ring). The Central Office Channel Interface rate element applies for every interface capacity that originates or terminates at a Central Office Node. A summary of the channel interfaces available with each node are specified in E7.2.16.A. following. Customers with DS3 or STS-1 interfaces at the Customer Node electing to connect with DS1 services at a Central Office Node, must obtain a 28-DS1 Channel System. (N)

5. Local Channel (N)

The Local Channel rate category provides for the communications path between a Customer Node and the serving wire center of the premises where located. Charges for Local Channels apply as described in A. preceding. It is available with all capacities of SMARTRing® service (a.k.a. BellSouth Dedicated Ring) except OC-1. (N)

(M)

Material previously appearing on this page now appears on page(s) 4 of this section.

®Registered Service Mark of BellSouth Corporation

E7. SPECIAL ACCESS (A.K.A. BELLSOUTH SPA) SERVICE

E7.1 General (Cont'd)

E7.1.2 Rate Categories (Cont'd)

F. Self-healing Multi-nodal Alternate Route Topology Ring (SMARTRing service [a.k.a. BellSouth Dedicated Ring]) (Cont'd) (T)

6. Alternate Central Office Channel

   The Alternate Central Office Channel provides for the communications path between a customer node and an alternate central office. It is available with all capacities of SMARTRing service (a.k.a. BellSouth Dedicated Ring) except OC-1. (T)

7. Interoffice Channel

   The Interoffice Channel provides for the communications path between directly connected Telephone Company central offices located on a SMARTRing service (a.k.a. BellSouth Dedicated Ring). It is available with all capacities of SMARTRing service (a.k.a. BellSouth Dedicated Ring) except OC-1. This rate element does not apply where Central Office Nodes are adjacently connected in the same Central Office on the same SMARTRing service (a.k.a. BellSouth Dedicated Ring) for the purpose of providing additional node capacity. (T)

8. Internodal Channel

   The Internodal Channel provides for the communications path between two directly connected Customer Nodes of a given SMARTRing service (a.k.a. BellSouth Dedicated Ring) located (a) in the same Serving Wire Center area or (b) in the same Office Park/Campus Environment or contiguous property, located in contiguous Serving Wire Center areas. It is available with all capacities of SMARTRing service (a.k.a. BellSouth Dedicated Ring) except OC-1. This rate element does not apply where Customer Nodes are adjacently connected in the same building on the same SMARTRing service (a.k.a. BellSouth Dedicated Ring) for the purpose of providing additional node capacity. (T)

9. Channel Interface Capacity Reallocation

   Channel Interface Capacity Reallocation allows the customer to reallocate STS-1, DS3 capacity interfaces at each node subsequent to the initial service installation.

G. ***Access*** Collocation Cross-Connects (C)

Access Collocation Cross-Connects provide a means for customers to interconnect their Shared Use and Digital High Capacity (a.k.a. BellSouth SPA High Capacity) to ***C***entral ***O***ffice ***C***ollocation arrangements ***within the same Central Office***. ***Terms, conditions, and*** rates ***for Physical Access Collocation Cross-Connects and*** Virtual ***Access*** Collocation Cross-Connects are ***set forth*** in ***Section E13. of this Tariff***. (C)

All BellSouth marks contained herein and as set forth in the trademarks and servicemarks section of this Tariff are owned by BellSouth Intellectual Property Corporation.

E7. SPECIAL ACCESS (A.K.A. BELLSOUTH SPA) SERVICE

E7.1 General (Cont'd)

E7.1.3 Service Configurations (T)

There are two types of service configurations over which Special Access (a.k.a. BellSouth SPA) services are provided: two-point service, multipoint service and ***SMARTRing service (a.k.a. BellSouth Dedicated Ring).*** (C)(M)

A. Two-Point Service (M)

A two-point service connects two customer designated premises, either on a directly connected basis or through a hub where channelization functions are performed. (M)

Applicable rate elements are: (M)

- Local Channels (M)
- Interoffice Channels (as applicable) (M)
- Optional Features and Functions (when applicable) (M)

In addition, a Special Access (a.k.a. BellSouth SPA) Surcharge as set forth in E7.4.2 following and a Message Station Equipment Recovery Charge as set forth in E7.4.3 following may be applicable. (M)

The following diagram depicts a two-point Voice Grade (a.k.a. BellSouth SPA DS0 VG) service connecting two customer designated premises located fifteen miles apart. The service is provided with C-Type Conditioning. (M)

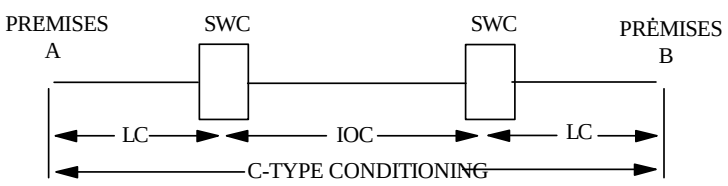

(M)

LC - Local Channel (M)

IOC - Interoffice Channel (M)

SWC - Serving Wire Center (M)

1. Applicable rate elements are:
   a. Local Channels (two applicable)
   b. Interoffice Channels (mileage band over nine thru twenty-five miles)
   c. C-Type conditioning Optional Feature

B. Multipoint Service

Multipoint service connects three or more customer designated premises through a Company Hub. There is no limitation on the number of mid-links available with multipoint service. However, when more than three mid-links are provided in tandem, the quality of the service may be degraded. A mid-link is a channel between hubs (i.e., bridging locations). Only certain types of Special Access (a.k.a. BellSouth SPA) service are provided as multipoint service. These are so designated in the Service Descriptions set forth in E7.2. following.

When ordering, the customer will specify the desired bridging Hub(s) selected from the Exchange Carrier Association Tariff F.C.C. No. 4. This tariff identifies the type(s) of bridging functions which are available and the serving wire centers at which they are available.

1. Applicable Rate Elements are:
   a. Local Channels (one per customer designated premises)
   b. Interoffice Channels (as applicable between each designated customer premises and the Hub and between Hubs)
   c. Bridging
   d. Additional Optional Features (when applicable)

In addition, a Special Access (a.k.a. BellSouth SPA) Surcharge as set forth in E7.4.2. following and a Message Station Equipment Recovery Charge as set forth in E7.4.3. following may be applicable.

E7. SPECIAL ACCESS (A.K.A. BELLSOUTH SPA) SERVICE

E7.1 General (Cont'd)

E7.1.3 Service Configurations (Cont'd)

B. Multipoint Service (Cont'd)

Example: Voice Grade (a.k.a. BellSouth SPA DS0 VG) multipoint connecting four customer premises via two customer specified bridging hubs.

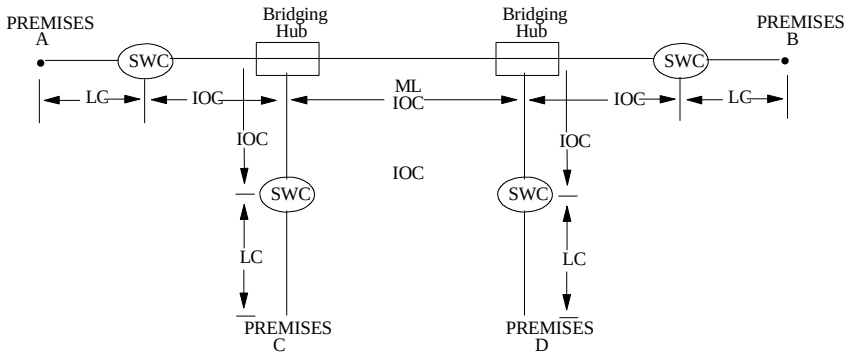

LC - Local Channel
IOC - Interoffice Channel
B - Bridging
SWC - Serving Wire Center

2. Applicable rate elements are:
   a. Local Channels (four applicable)
   b. Interoffice Channel (five sections, each from appropriate mileage band)
   c. Bridging Optional Feature (six applicable, i.e., each bridge port)

(M)

Material previously appearing on this page now appears on page(s) 6 of this section.

E7. SPECIAL ACCESS (A.K.A. BELLSOUTH SPA) SERVICE

E7.1 General (Cont'd)

E7.1.3 Service Configurations (Cont'd)

C. SMARTRing® service (a.k.a. BellSouth Dedicated Ring) (N)

1. The SMARTRing® service (a.k.a. BellSouth Dedicated Ring) configuration utilizes a multi-nodal ring architecture which is specified jointly by the Company and the customer. The minimum configuration provides dedicated DS3 and/or DS1 digital services and must include at least three nodes. The three nodes may all be Central Office Nodes in Telephone Company Central Offices, or the three nodes may be a Central Office Node in a Telephone Company Central Office, a Customer Node at a customer's designated location and the third node may be either a Central Office Node or a node at a another customer designated location. Additional nodes for either arrangement may be any combination thereof. The maximum number of nodes will be determined based on equipment capability. The nodes are connected by SMARTRing® service (a.k.a. BellSouth Dedicated Ring) Local Channels, Alternate Central Office Channels, Interoffice Channels and Internodal Channels as applicable. SMARTRing® service (a.k.a. BellSouth Dedicated Ring) may be connected to other DS3/DS1 services only at Central Office Nodes. With OC-12 SMARTRing® service (a.k.a. BellSouth Dedicated Ring) installed on or after June 3, 1994, and with OC-48 and OC-48+ SMARTRing® service (a.k.a. BellSouth Dedicated Ring) the customer may request an OC-1 and/or OC-3 Overlay Ring Arrangement riding the customer's host OC-12, OC-48, or OC-48+ SMARTRing® service (a.k.a. BellSouth Dedicated Ring). With OC-48 SMARTRing® service (a.k.a. BellSouth Dedicated Ring), the customer may request an OC-3+ and/or OC-12 Overlay Ring Arrangement riding the customer's host OC-48 SMARTRing® service (a.k.a. BellSouth Dedicated Ring). In an Overlay Ring Arrangement, node and channel configuration requirements apply to the host SMARTRing® service (a.k.a. BellSouth Dedicated Ring). (N)
2. Applicable rate elements for this service are: (N)
   a. Customer Node (at least one for configurations other than three Central Office Node arrangement) (N)
   b. Customer Channel Interface (one for each originating/terminating activated DS1, DS3, STS-1, OC-3, and/or OC-12 for each Customer Node) (N)
   c. Central Office Node (at least one for configurations other than three Central Office Node arrangement) (N)
   d. Central Office Channel Interface (one for each originating/terminating activated DS1, DS3, STS-1, OC-3 and/or OC-12 for each Central Office Node or one for each 28 DS1 Channel System and associated DS1 Channel Interfaces for each activated DS3) (N)
   e. Local Channel (at least one for each Customer Node which is directly connected to the serving wire center) (N)
   f. Alternate Central Office Channel (at least one for each Customer Node which is directly connected to an Alternate Central Office) (N)
   g. Internodal Channel (one for each path between two directly connected customer nodes) (N)
   h. Interoffice Channel (one for each path between each two directly connected Telephone Company Central Offices) (N)
   i. Channel Interface Capacity Reallocation (one per node per occurrence) (N)

® Registered Service Mark of BellSouth Corporation

E7. SPECIAL ACCESS (A.K.A. BELLSOUTH SPA) SERVICE

E7.1 General (Cont'd)

E7.1.3 Service Configurations

C. SMARTRing® service (a.k.a. BellSouth Dedicated Ring) (Cont'd) (N)

(N)

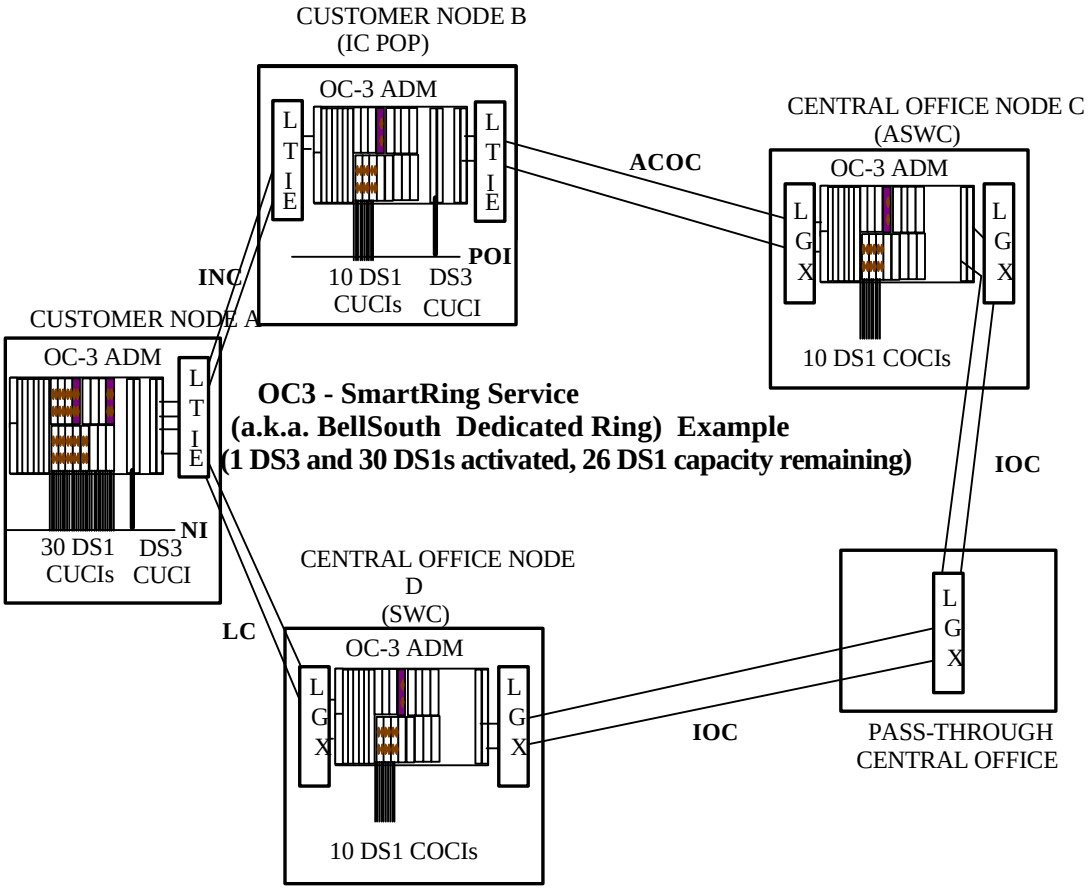

Example: SMARTRing® service (a.k.a. BellSouth Dedicated Ring) OC-3 capacity. (N)

For this example the following rate elements are applicable: (N)

- 2 Customer Nodes (N)
- 2 Central Office Nodes (N)
- 1 Local Channel (N)
- 1 Internodal Channel (N)
- 1 Alternate Central Office Channel (N)
- 2 Interoffice Channels (N)
- 2 DS3 Customer Channel Interfaces (N)
- 40 DS1 Customer Channel Interfaces (N)
- 20 DS1 Central Office Channel Interfaces (N)

® Registered Service Mark of BellSouth Corporation

E7. SPECIAL ACCESS (A.K.A. BELLSOUTH SPA) SERVICE

E7.1 General (Cont'd)

E7.1.3 Service Configurations (Cont'd)

C. SMARTRing® service (a.k.a. BellSouth Dedicated Ring) (Cont'd) (N)

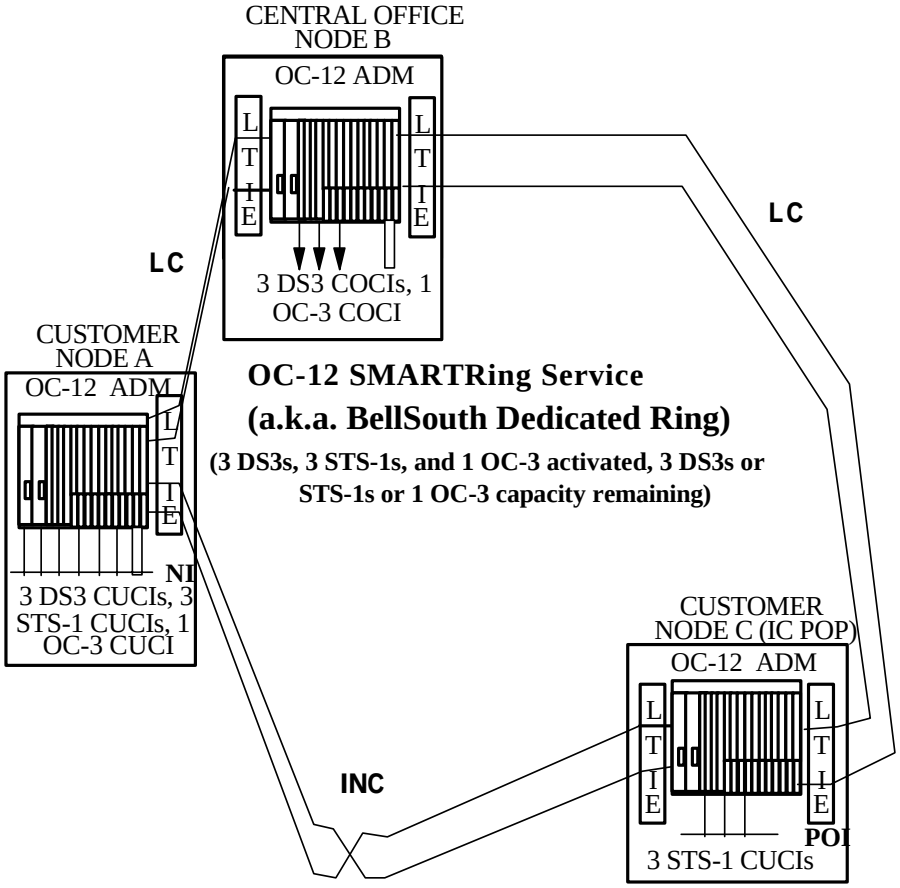

(N)

Example: SMARTRing® service (a.k.a. BellSouth Dedicated Ring) OC-12 capacity. (N)

For this example the following rate elements are applicable: (N)

- 2 Customer Nodes (N)
- 1 Central Office Nodes (N)
- 2 Local Channels (N)
- 1 Internodal Channel (N)
- 3 DS3 Customer Channel Interfaces (N)
- 3 DS3 Central Office Channel Interfaces (N)
- 6 STS-1 Customer Channel Interfaces (N)
- 1 OC-3 Customer Channel Interface (N)
- 1 OC-3 Central Office Channel Interface (N)

® Registered Service Mark of BellSouth Corporation

E7. SPECIAL ACCESS (A.K.A. BELLSOUTH SPA) SERVICE

E7.1 General (Cont'd)

E7.1.3 Service Configurations (Cont'd)

C. SMARTRing® service (a.k.a. BellSouth Dedicated Ring) (Cont'd) (N)

(N)

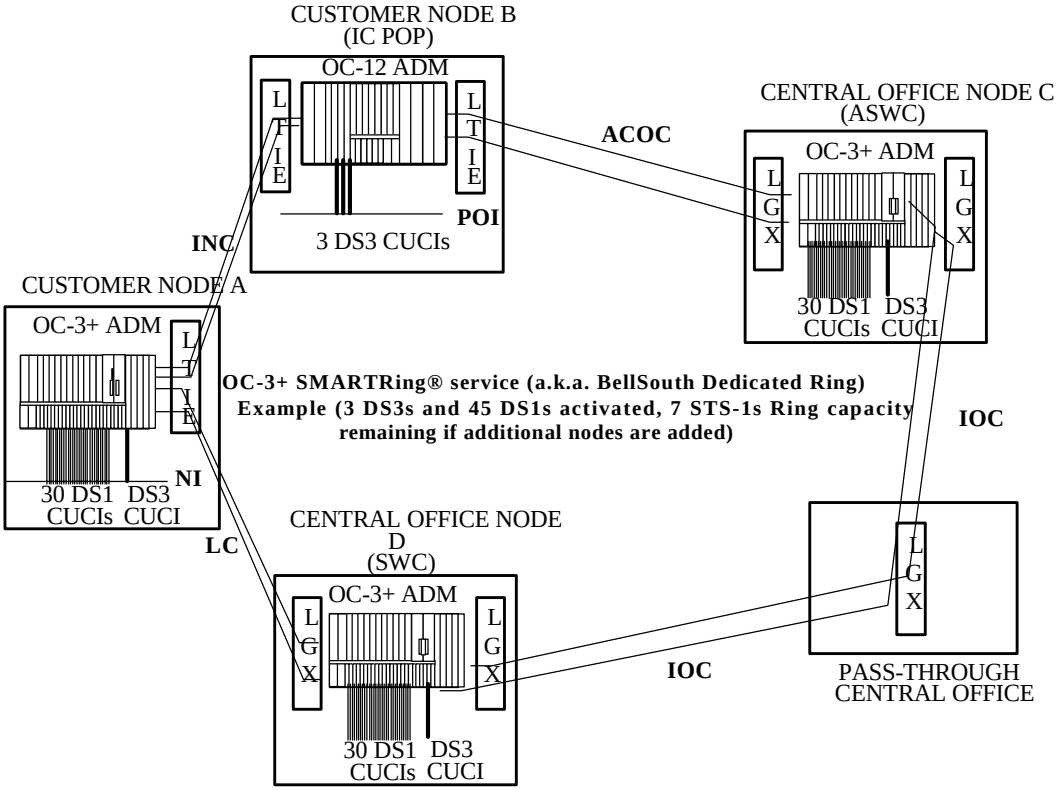

Example: SMARTRing® service (a.k.a. BellSouth Dedicated Ring) OC-3+ capacity. (N)

For this example the following rate elements are applicable: (N)

- 2 Customer Nodes (N)
- 2 Central Office Nodes (N)
- 1 Local Channel (N)
- 1 Internodal Channel (N)
- 1 Alternate Central Office Channel (N)
- 2 Interoffice Channels (N)
- 4 DS3 Customer Channel Interfaces (N)
- 2 DS3 Central Office Channel Interfaces (N)
- 30 DS1 Customer Channel Interfaces (N)
- 60 DS1 Central Office Channel Interfaces (N)

® Registered Service Mark of BellSouth Corporation

E7. SPECIAL ACCESS (A.K.A. BELLSOUTH SPA) SERVICE

E7.1 General (Cont'd)

E7.1.3 Service Configurations (Cont'd)

C. SMARTRing® service (a.k.a. BellSouth Dedicated Ring) (Cont'd) (N)

(N)

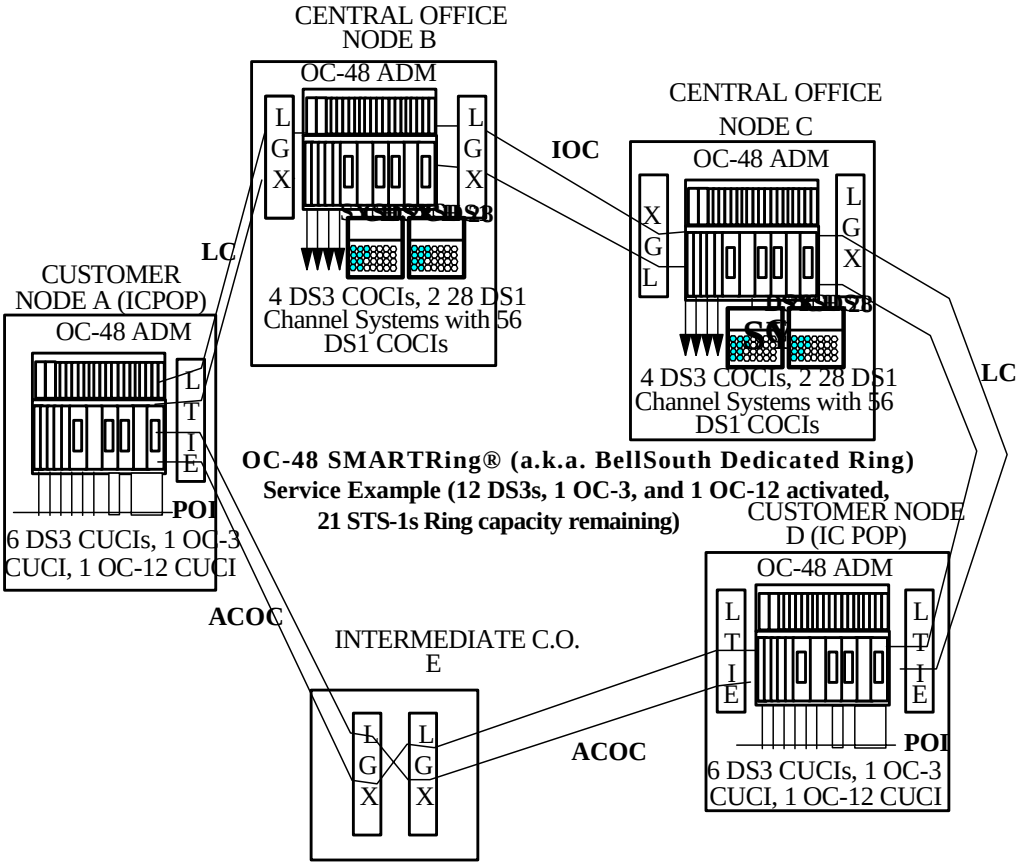

Example: SMARTRing® service (a.k.a. BellSouth Dedicated Ring) OC-48 capacity. (N)

For this example the following rate elements are applicable: (N)

- 2 Customer Nodes (N)
- 2 Central Office Nodes (N)
- 2 Local Channels (N)
- 2 Alternate Central Office Channels (N)
- 1 Interoffice Channel (N)
- 12 DS3 Customer Channel Interfaces (N)
- 8 DS3 Central Office Channel Interfaces (N)
- 4 28 DS1 Channel Systems (DS3) (N)
- 112 DS1 Central Office Channel Interfaces (N)
- 2 OC-3 Customer Channel Interfaces (N)
- 2 OC-12 Customer Channel Interfaces (N)

® Registered Service Mark of BellSouth Corporation

E7. SPECIAL ACCESS (A.K.A. BELLSOUTH SPA) SERVICE

E7.1 General (Cont'd)

E7.1.3 Service Configurations (Cont'd)

C. SMARTRing® service (a.k.a. BellSouth Dedicated Ring) (Cont'd) (N)

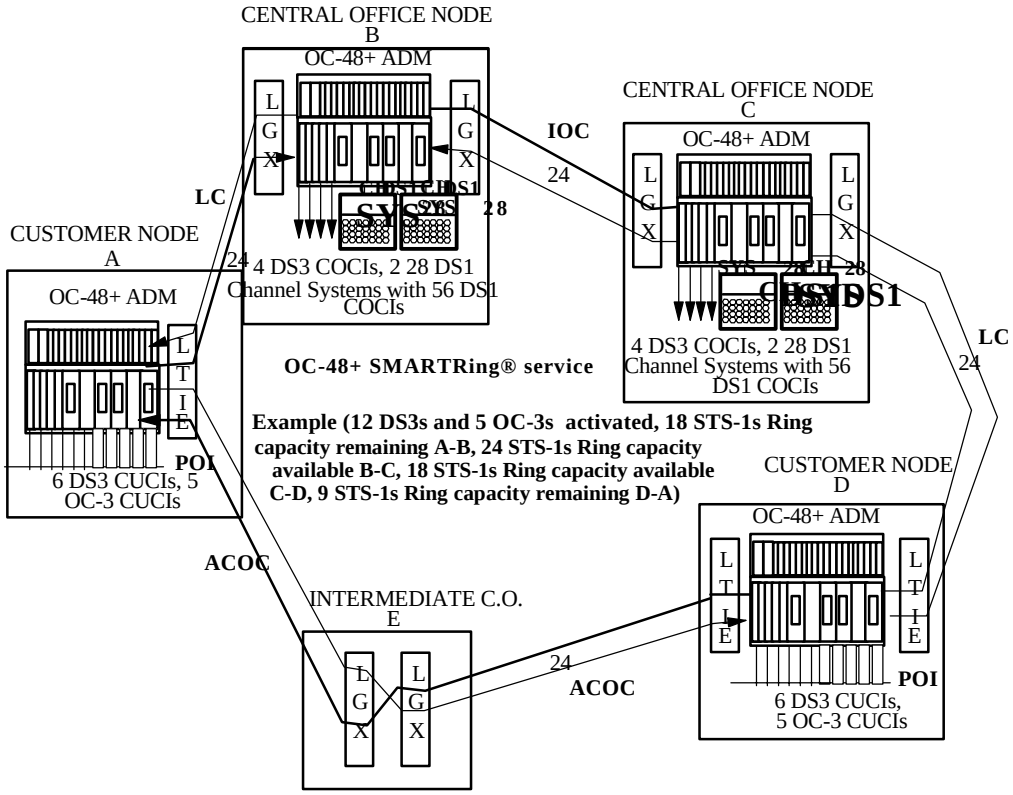

(N)

Example: SMARTRing® service (a.k.a. BellSouth Dedicated Ring) service OC-48+ capacity. (N)

For this example the following rate elements are applicable: (N)

- 2 Customer Nodes (N)
- 2 Central Office Nodes (N)
- 2 Local Channels (N)
- 2 Alternate Central Office Channels (N)
- 1 Interoffice Channel (N)
- 12 DS3 Customer Channel Interfaces (N)
- 8 DS3 Central Office Channel Interfaces (N)
- 4 28 DS1 Channel Systems (DS3) (N)
- 112 DS1 Central Office Channel Interfaces (N)
- 10 OC-3 Customer Channel Interfaces (N)

® Registered Service Mark of BellSouth Corporation

E7. SPECIAL ACCESS (A.K.A. BELLSOUTH SPA) SERVICE

E7.1 General (Cont'd)

E7.1.4 Alternate Use (T)

A. Alternate Use occurs when a service is arranged by the Company so that the customer can select different types of transmission at different times. A customer may use a service in any privately beneficial manner. However, where technical or engineering changes are required to effectuate an alternative use, the Company will make such special arrangements available on an individual case basis. (M)

B. The arrangement required to transfer the service from one operation to the other (i.e., the transfer relay and control leads) will be rated and provided on an individual case basis and filed in Section E12., Specialized Service or Arrangements. The customer will pay the stated tariff rates for the Access Service rate elements for the service ordered (i.e., Local Channels, Interoffice Channels as applicable, and Optional Features and Functions, if any.)

E7.1.5 Special Facilities Routing

A customer may request that the facilities used to provide Special Access (a.k.a. BellSouth SPA) service be specially routed. The regulations, rates and charges for Special Facilities Routing (i.e., Avoidance, Diversity and Cable Only) are as set forth in Section E11. following.

E7.1.6 Design Layout Report

At the request of the customer, the Company will provide to the customer the make-up of the facilities and services provided in this section of the Tariff as Special Access (a.k.a. BellSouth SPA) service to aid the customer in designing its overall service. This information will be provided in the form of a Design Layout Report.

The Design Layout Report will be provided to the customer at no charge, and will be reissued or updated whenever these facilities are materially changed.

E7.1.7 Acceptance Testing

A. At no additional charge, the Company will, at the customer's request, cooperatively test, at the time of installation, the following parameters:

1. For Voice Grade (a.k.a. BellSouth SPA DS0 VG) services, acceptance tests will include tests for loss, 3-tone slope, DC continuity, operational signaling, C-notched noise and C-message noise when these parameters are applicable and specified in the order for service. Additionally, for Voice Grade (a.k.a. BellSouth SPA DS0 VG) services, a balance (improved loss) test will be made if the customer has ordered the improved loss optional feature.
2. For other analog services (i.e., Telegraph (a.k.a. BellSouth SPA Telegraph), WATS Access Line (a.k.a. BellSouth SPA WATS Line) and Wired Music and for digital services (i.e., Digital Data Access (a.k.a. BellSouth SPA DS0 Digital Data), WATS Access Line (a.k.a. BellSouth SPA WATS Line) and High Capacity (a.k.a. BellSouth SPA High Capacity)), acceptance tests will include tests for the parameters applicable to the service as specified in the order for service.

B. In addition to the above tests, Additional Cooperative Acceptance Testing for Voice Grade (a.k.a. BellSouth SPA DS0 VG) service to test other parameters, as described in E13.3.5.B. following, is available at the customer's request. All test results will be made available to the customer upon request.

E7.1.8 Ordering Options and Conditions

A. The ordering option available to the customer in the provision of Special Access (a.k.a. BellSouth SPA) service is the Access Order.

B. This option is set forth in detail in Section E5. preceding. Also included in that section are other charges which may be associated with ordering Special Access (a.k.a. BellSouth SPA) service (e.g., Service Date Change Charges, Cancellation Charges, etc.).

(M)

E7. SPECIAL ACCESS (A.K.A. BELLSOUTH SPA) SERVICE

E7.1 General (Cont'd)

E7.1.8 Ordering Options And Conditions (Cont'd)

C. For the purposes of ordering, there are nine categories of Special Access (a.k.a. BellSouth SPA) service. These are:

1. Telegraph Grade (a.k.a. BellSouth SPA Telegraph) (TG)
2. Voice Grade (a.k.a. BellSouth SPA DS0 VG) (VG)
3. Wired Music (AP)
4. Commercial Quality Video (a.k.a. BellSouth SPA Commercial Quality Video) (TV)
5. Digital Data Access (a.k.a. BellSouth SPA DS0 Digital Data) service (DDAS)
6. High Capacity (a.k.a. BellSouth SPA High Capacity) (HC)
7. WATS Access Line (a.k.a. BellSouth SPA WATS Line) (WAL)
8. Derived Data Channel (a.k.a. BellSouth SPA Derived Data Channel) service
9. Self-Healing Rings (SMARTRing service [a.k.a. BellSouth Dedicated Ring]) (T)

D. Each service consists of a basic channel to which a predefined technical specifications package, channel interface(s) and, when desired, optional features and functions are added to construct the service desired by the customer. Each of the components of the service is described in this section. Terms and conditions for ***C***entral ***O***ffice interconnection of collocator-provided transmission equipment are set forth in BellSouth Telecommunications, Inc., Tariff F.C.C. No. 1, Section 20. ***Terms, conditions, and*** rates ***for Physical Access Collocation Cross-Connects and*** Virtual ***Access*** Collocation Cross-Connects are ***set forth*** in ***Section E13. of this Tariff for those services that are permitted to connect directly to a carrier's*** collocation ***space***. (C)

E. The channel description specifies the characteristics of the basic channel and indicates whether the channel is provided between customer designated premises or between a customer designated premises and a Company hub where bridging and/or channelization functions are performed.

F. Information pertaining to the technical specifications packages indicates the transmission parameters that are available with each package. This information is displayed in a matrix with the transmission parameters listed down the left side and the packages listed across the top. Each package is identified by a code, e.g., VG1. The first two letters of the code indicate the category of Special Access (a.k.a. BellSouth SPA) service to which the parameters are applicable. These two-letter codes are shown above in parentheses following the category of Special Access (a.k.a. BellSouth SPA) service. The number "1" following the two-letter code indicates the technical specifications package for a voice grade service. An alphanumeric designation following the two letter code indicates the specific predefined package. When appropriate, the Technical Reference which contains detailed specifications for the parameters is shown following the matrix.

G. Channel interfaces at each point of termination on a two-point service may be symmetrical or asymmetrical. On a multipoint service they may also be symmetrical or asymmetrical. However, communications can only be provided between points of termination with compatible channel interfaces. Only certain channel interfaces are compatible. These are set forth in a combination format.

Only certain channel interface combinations are available with the predefined technical specifications packages. These are delineated in the Technical References set forth at the end of this E7.2.

H. The optional features and functions available with each type of Special Access (a.k.a. BellSouth SPA) service are described in this section. The optional features and functions information also indicates with which technical specifications packages they are available. Such information is displayed in a matrix with the optional feature or function listed down the left side and the technical specifications package listed across the top.

I. The Company will maintain existing transmission specifications on services installed prior to the effective date of this Tariff, except that the existing services with performance specifications exceeding the standard listed in this provision will be maintained at the performance levels specified in this Tariff.

All services installed will conform to the transmission specification standards contained in this section of the Tariff or in the following Technical References for each category of service:

Telegraph Grade (a.k.a. BellSouth SPA Telegraph)	TR-NPL-000336
Voice Grade (a.k.a. BellSouth SPA DSO VG)	TR-NPL-000335
	PUB 41004, Table 4
Wired Music	TR-NPL-000337
Commercial Quality Video (a.k.a. BellSouth SPA Commercial Quality Video)	BellSouth TR-73557

All BellSouth marks contained herein and as set forth in the trademarks and servicemarks section of this Tariff are owned by BellSouth Intellectual Property Corporation.

E7. SPECIAL ACCESS (A.K.A. BELLSOUTH SPA) SERVICE (T)

E7.1 General (Cont'd)

E7.1.8 Ordering Options And Conditions (Cont'd)

I. (Cont'd)

Digital Data Access ***(a.k.a. BellSouth DSO Digital Data)***	TR-NPL-000341	(T)
For 2.4, 4.8, 9.6 and 56.0 Kbps	BellCore PUB 62310	
For 19.2 Kbps	INC. BULLETIN CB-INC-100	
For 64.0 Kbps	AT&T PUB 62310	
High Capacity ***(a.k.a. BellSouth SPA High Capacity)***	TA-TSY-000342 TR-NPL-000054	(T)
WATS Access Line ***(a.k.a. BellSouth SPA WATS Line)***	TR-NPL-000334	(T)
Derived Data Channel ***(a.k.a. BellSouth Derived Data Channel)*** service	BellSouth TR-73548 BellSouth TR-73548, Addendum 1	(T)

E7.2 Service Descriptions

E7.2.1 Reserved for Future Use

E7. SPECIAL ACCESS (A.K.A. BELLSOUTH SPA) SERVICE (T)

E7.2 Service Descriptions (Cont'd)

E7.2.2 Telegraph Grade *(a.k.a. BellSouth SPA Telegraph)* Service (T)

A. Basic Channel Description

A Telegraph Grade ***(a.k.a. BellSouth SPA Telegraph)*** channel is an unconditioned channel capable of transmitting binary signals at rates of 0-75 baud or 0-150 baud. This channel is furnished for half-duplex or duplex operation. Telegraph Grade ***(a.k.a. BellSouth SPA Telegraph)*** channels are provided between customer designated premises or between a customer designated premises and a Company Hub. Telegraph Grade ***(a.k.a. BellSouth SPA Telegraph)*** service is not available for additions, new installations or moves of service. (T)

B. Technical Specifications Packages

	Package TG-	
Parameter	**1**	**2**
Telegraph Distortion	X	X

The technical specifications are delineated in Technical Reference TR-NPL-000336.

C. Channel Interfaces

Compatible channel interfaces are set forth in Technical Reference TR-NPL-000336.

D. Optional Features and Functions

1. Telegraph Bridging (two-wire and four-wire)

The following table shows the technical specifications packages with which the optional features and functions are available.

	Available with Technical Specifications Package TG-	
	1	**2**
Telegraph Bridging	X	X

E7.2.3 Voice Grade *(a.k.a. BellSouth SPA DS0 VG)* Service (T)

A. Basic Channel Description

A Voice Grade ***(a.k.a. BellSouth SPA DS0 VG)*** channel is a channel which provides voice frequency transmission capability in the nominal frequency range of 300 to 3000 Hz and may be terminated two-wire or four-wire. Voice Grade ***(a.k.a. BellSouth SPA DS0 VG)*** channels are provided between customer designated premises or between a customer designated premises and a Company Hub. (T)

Voice Grade ***(a.k.a. BellSouth SPA DS0 VG)*** Channels are classified as Voice Grade/Voice or Voice Grade/Data depending on the suitability of the technical specification package requested by the customer. Voice Grade ***(a.k.a. BellSouth SPA DS0 VG)*** Technical Specification Packages 1, 2, 3, 4, 5, 7, 8, 9, 11 and 12 are suitable for Voice Grade/Voice. The Technical Specification Packages 6 and 10 are suitable for Voice Grade/Data Service. (T)

B. Technical Specifications Packages

E7. SPECIAL ACCESS (A.K.A. BELLSOUTH SPA) SERVICE (T)

E7.2 Service Descriptions (Cont'd)

E7.2.3 Voice Grade *(a.k.a. BellSouth SPA DS0 VG)* Service (Cont'd) (T)

B. Technical Specifications Packages (Cont'd)

	Package VG-											
Parameter	**1**	**2**	**3**	**4**	**5**	**6**	**7**	**8**	**9**	**10**	**11**	**12**
Attenuation Distortion	X	X	X	X	X	X	X	X	X	X	X	X
C-Message Noise	X	X	X	X	X	X	X	X	X	X	X	X
Echo Control	X	X	X		X		X	X			X	X
Envelope Delay Distortion						X	X	X	X	X	X	X
Frequency Shift						X	X	X	X	X	X	X
Impulse Noise					X	X	X	X	X	X	X	X
Intermodulation Distortion						X	X	X	X	X	X	
Loss Deviation	X	X	X	X	X	X	X	X	X	X	X	X
Phase Jitter						X	X	X	X	X	X	
Signal-to-C Message Noise				X								
Signal-to-C Notch Noise					X	X	X	X	X	X	X	X

The technical specifications for these parameters are delineated in Technical Reference TR-NPL-000335 and associated Addendum.

C. Channel Interfaces

The following channel interfaces for Voice Grade ***(a.k.a. BellSouth SPA DS0 VG)*** service do not require signaling capability: DA, DB, DD, DE, DS, NO, PR and TF. (T)

The following channel interfaces for Voice Grade ***(a.k.a. BellSouth SPA DS0 Digital Data)*** service require signaling capability: AB, AC, CT, DX, EA, EB, EC, EX, GO, GS, LA, LB, LC, LO, LR, LS, RV and SF. (T)

Compatible channel interfaces are set forth in Technical Reference TR-NPL-A and Associated Addendum following.

E7. SPECIAL ACCESS (A.K.A. BELLSOUTH SPA) SERVICE (T)

E7.2 Service Descriptions (Cont'd)

E7.2.3 Voice Grade *(a.k.a. BellSouth SPA DS0 VG)* Service (Cont'd) (T)

D. Optional Features And Functions

1. Central Office Bridging

a. Voice Bridging[1] (two-wire and four-wire)

b. Data Bridging[2] (two-wire and four-wire)

c. Telephoto Bridging[2] (two-wire and four-wire)

Note 1: Voice Bridging is intended for use with VG2, 5 and 12. However, it may be used on VG6 and VG10 at a customer's request.

Note 2: Telephoto Bridging is intended for use on VG11.

E7. SPECIAL ACCESS (A.K.A. BELLSOUTH SPA) SERVICE (T)

E7.2 Service Descriptions (Cont'd)

E7.2.3 Voice Grade *(a.k.a. BellSouth SPA DS0 VG)* Service (Cont'd) (T)

D. Optional Features And Functions (Cont'd)

1. Central Office Bridging (Cont'd)
2. Conditioning

Conditioning provides more specific transmission characteristics for Voice Grade ***(a.k.a. BellSouth SPA DS0 VG)*** services. C-Type conditioning controls attenuation distortion and envelope delay distortion. Sealing Current helps maintain continuity on dry metallic loops. (T)

For two-point services, the parameters apply to each service. For multipoint services, the parameters apply to each mid link or end link. C-Type conditioning and D-Conditioning may be combined on the same service.

a. C-Type Conditioning

C-Type Conditioning is provided for the additional control of attenuation distortion and envelope delay distortion on data services. The attenuation distortion and envelope delay distortion specifications for C-Type Conditioning are:

Attenuation Distortion (Frequency Response) Relative to 1004 Hz

Frequency Range (Hz)	**Variation (dB)**
504 - 2804	-1.0 to + 3.0
304 - 3004	-2.0 to + 6.0

Envelope Delay Distortion

Frequency Range (Hz)	**Variation (micro-seconds)**
1004 - 2604	Less than 501
604 - 2604	Less than 1501
504 - 2804	Less than 3001

b. Improved Attenuation Distortion

Improved attenuation distortion is provided for additional control of attenuation distortion. The improved attenuation distortion specifications are:

Attenuation Distortion (Frequency Response) Relative to 1004 Hz

Frequency Range (Hz)	**Variation (dB)**
404-2804	-1.0 to +2.0
304-3004	-1.0 to +3.0
3004-3204	-2.0 to +6.0

E7. SPECIAL ACCESS (A.K.A. BELLSOUTH SPA) SERVICE (T)

E7.2 Service Descriptions (Cont'd)

E7.2.3 Voice Grade *(a.k.a. BellSouth SPA DS0 VG)* Service (Cont'd) (T)

D. Optional Features And Functions (Cont'd)

2. Conditioning (Cont'd)

c. Improved Envelope Delay Distortion

Improved envelope delay distortion is provided for additional control of envelope distortion. The improved envelope delay distortion specifications are:

Envelope Delay Distortion

Frequency Range (Hz)	**Variation (micro-seconds)**
1001-2604	Less than 101
604-2604	Less than 301
504-2804	Less than 3001

d. Sealing Current Conditioning

Sealing Current Conditioning is provided to help maintain continuity on dry metallic loops. It is usually associated with four-wire DA or NO type channel interfaces.

3. Customer Specified Premises Receive Level

This option allows the customer to specify the receive level at the Point of Termination. The level must be within a specific range of effective four-wire transmission. The ranges are delineated in Technical Reference TR-NPL-000335.

4. Echo Control

a. ELEPL 2 (Equal Level Echo Path Loss)

On Effective Two-Wire Transmission at Four-Wire Point of Termination (applicable to each two-wire port): Provides for a fixed 600 ohm impedance, variable level range and simplex reversal. Company equipment is required at the customer's premises where this option is ordered. Improved Return Loss parameters are delineated in Technical Reference TR-NPL-000335.

b. Improved Return Loss

On Effective Two-Wire Transmission at Two-Wire Point of Termination: Provides for more stringent Echo Control specifications. In order for this option to be applicable, the transmission path must be four-wire at one Point of Termination (POT) and two-wire at the other POT. Placement of Company equipment may be required at the customer's premises with two-wire POT. The Improved Return Loss parameters are delineated in Technical Reference TR-NPL-000335.

5. D-Conditioning

D-Conditioning provides transmission characteristics suitable for data communications. Specifically, D-Conditioning provides for the control of Signal to C-Notched Noise Ratio and intermodulation distortion. It is available for two-point services or multipoint services.

E7. SPECIAL ACCESS (A.K.A. BELLSOUTH SPA) SERVICE (T)

E7.2 Service Descriptions (Cont'd)

E7.2.3 Voice Grade *(a.k.a. BellSouth SPA DS0 VG)* Service (Cont'd) (T)

D. Optional Features And Functions (Cont'd)

5. D-Conditioning (Cont'd)

The signal to C-Notched Noise Ratio and intermodulation distortion parameters for D-Conditioning are:

- Signal to C-Notched Noise Ratio is equal to or greather than 32dB
- Intermodulation distortion:
  - Signal to second order modulation products (R2) is equal to or greater than 38dB
  - Signal to third order modulation products (R3) is equal to or greater than 42dB

When a service equipped with D-Conditioning is used for voice communications, the quality of the voice transmission may not be satisfactory. D-Conditioning transmission characteristics are described in Technical Reference TR-NPL-000335 under the name Data Capability.

6. Telephoto Conditioning

Telephoto Conditioning provides transmission characteristics suitable for telephotographic communications. Specifically, Telephoto Conditioning is provided for the control of attenuation distortion and envelope delay distortion on telephotographic services. The attenuation distortion and envelope delay distortion parameters for Telephoto Conditioning are:

Attenuation Distortion
(1004 Hz Reference)

Frequency Range (Hz)	Variation (dB)
500 - 3000	- 0.5 to + 1.5
300 - 3200	- 1.0 to + 2.5

Envelope Delay Distortion

Frequency Range (Hz)	Variation (mcs)
1000 - 2600	Less than 111
800 - 2800	Less than 181

7. Signaling Capability

Signaling Capability provides for the process by which one customer premises alerts another customer premises on the same service with which it wishes to communicate.

E7. SPECIAL ACCESS (A.K.A. BELLSOUTH SPA) SERVICE (T)

E7.2 Service Descriptions (Cont'd)

E7.2.3 Voice Grade *(a.k.a. BellSouth SPA DS0 VG)* Service (Cont'd) (T)

D. Optional Features And Functions (Cont'd)

8. Improved Termination

The Improved Termination option provides a fixed 600 ohm impedance, a variable level range and simplex reversal, when applicable, at the point of termination. Company equipment is required at the customer's premises when this option is ordered. The Improved Termination parameters are delineated in Technical Reference TR-NPL-000335.

9. Simplex Reversal

The Simplex Reversal option physically turns over the simplex DC path presented at the four-wire point of termination when LO, LS, GO, GS, & DX signaling is provided at the point of termination.

10. FlexServ® service ***(a.k.a. BellSouth SPA Customer Reconfiguration)*** (T)

FlexServ® service ***(a.k.a. BellSouth SPA Customer Reconfiguration) p***rovides the customer the ability to monitor and reconfigure Voice Grade ***(a.k.a. BellSouth SPA DS0 VG)*** service provided by the Company. FlexServ® service ***(a.k.a. BellSouth SPA Customer Reconfiguration)*** is described in E7.4.12 following. Charges for this feature are contained in E7.5.16 following. (T)

The following table shows the technical specifications packages with which the optional features and functions are available.

	Available with Technical Specifications Package VG-											
	1	**2**	**3**	**4**	**5**	**6**	**7**	**8**	**9**	**10**	**11**	**12**
C-Type Conditioning					X	X	X	X	X	X		
Improved Attenuation Distortion					X	X	X	X	X	X		
Improved Envelope Delay Distortion					X	X	X	X	X	X		
Central Office Bridging Capability		X			X	X				X	X	X
Customer Specified Premises Receive Level		X	X				X	X	X			
D-Conditioning						X	X		X			
Echo Control Improved Return Loss		X	X				X					
ELEPL2	X	X	X		X		X					
FlexServ® Service ***(a.k.a. BellSouth SPA Customer Reconfiguration)***	X	X	X	X	X	X	X	X	X	X	X	
Improved Termination	X	X	X	X	X	X	X	X	X	X	X	X
Simplex Reversal	X	X	X				X	X	X			

(T)

®Registered Service Mark of BellSouth Corporation

E7. SPECIAL ACCESS (A.K.A. BELLSOUTH SPA) SERVICE (T)

E7.2 Service Descriptions (Cont'd)

E7.2.3 Voice Grade *(a.k.a. BellSouth SPA DS0 VG)* Service (Cont'd) (T)

D. Optional Features And Functions (Cont'd)

	Available with Technical Specifications Package VG-											
	1	**2**	**3**	**4**	**5**	**6**	**7**	**8**	**9**	**10**	**11**	**12**
Sealing Current Conditioning					X							
Signaling Capability	X	X	X				X	X	X			
Telephoto Conditioning											X	

E. Four-Wire/Two-Wire Conversions

When a customer requests that an effective four-wire channel be terminated with a two-wire channel interface at the customer designated premises, a four-wire to two-wire conversion is required. The rate for the conversion is included as part of the basic Local Channel rate.

F. WATS Access Line (WAL) ***(a.k.a. BellSouth SPA WATS Line)*** service (T)

1. Basic Channel Description

A WATS Access Line ***(a.k.a. BellSouth SPA WATS Line)*** service (WAL) provides a channel for voice frequency transmission capability. The service provides a connection between a customer designated premises and a WATS serving office associated with the closed end of ***BellSouth SWA 8XX Toll Free Dialing Ten Digit Screening Service***, WATS ***(a.k.a. BellSouth SPA WATS Line)*** or similar services. It is provided for use with ***BellSouth SWA FGC*** or ***BellSouth SWA FGD*** in the originating and terminating direction and ***BellSouth SWA FGA*** and ***BellSouth SWA FGB*** in the terminating direction and ***BellSouth SWA*** arrangement features as set forth in Section E6. preceding. The Company is currently unable to provide originating WATS ***(a.k.a. BellSouth SPA WATS Line)*** service through ***BellSouth SWA FGA*** and ***BellSouth SWA FGB***. Such service will be provided as specified in 2. and 3. following. (T)

The following shall apply to the Company's provision of WATS Access Line ***(a.k.a. BellSouth SPA WATS Line)*** service: (T)

a. When the end user's serving wire center is not a WATS serving office, channel mileage charges will apply for a WATS access line ***(a.k.a. BellSouth SPA WATS Line)*** extension (WALE) between the end user's serving wire center and the nearest WATS serving office. (T)

b. When a customer, other than AT&T, orders originating WATS Access Line ***(a.k.a. BellSouth SPA WATS Line)*** service and the end user's serving wire center is a WATS serving office which is not equipped with equal access, the Company will provide the WAL service to the nearest equal access WATS serving office by use of a WALE and the channel mileage charges for the WALE will be waived. (T)

c. When a customer other than AT&T orders originating WATS Access Line ***(a.k.a. BellSouth SPA WATS Line)*** service and the end user's serving wire center is not a WATS serving office and the nearest WATS serving office is not equipped with equal access, channel mileage charges for a WALE to the nearest WATS serving office will apply, as indicated in 1. preceding, but the Company will provide an additional WALE to the nearest WATS serving office equipped with equal access and the channel mileage charge for the additional WALE will be waived. (T)

E7. SPECIAL ACCESS (A.K.A. BELLSOUTH SPA) SERVICE (T)

E7.2 Service Descriptions (Cont'd)

E7.2.3 Voice Grade *(a.k.a. BellSouth SPA DS0 VG)* Service (Cont'd) (T)

F. WATS Access Line (WAL) ***(a.k.a. BellSouth SPA WATS Line)*** service (Cont'd) (T)

1. Basic Channel Description (Cont'd)

   c. (Cont'd)

   WATS Access Line ***(a.k.a. BellSouth SPA WATS Line)*** service is arranged for either originating calling or terminating calling. It is provided with either rotary dial or dual tone multifrequency address signaling and either loop start, ground start, E & M or reverse battery supervisory signaling. The choice of the type of signaling is at the option of the customer and subject to the technical limitations identified in the Technical Reference TR-NPL-000334. WATS Access Line ***(a.k.a. BellSouth SPA WATS Line)*** service is provided as an effective two-wire, an effective four-wire or a DS1 (i.e., 1.544 Mbps) transmission path. The DS1 WAL is only available as a trunk side termination on suitably equipped electronic switch, e.g., 1/1A ESS with Digital Carrier Termination (DCT) or DMS-100 with a Line Trunk Unit (LTU). (T)

2. Technical Specification Packages

	Package WAL -		
Parameters	**1**	**2**	**3**
Attenuation Distortion	X	X	
Bit Error Rate			X
C-Message Noise	X	X	
Echo Control	X	X	
Envelope Delay Distortion	X	X	
Frequency Shift	X	X	
Impulse Noise	X	X	
Intermodulation Distortion	X	X	
Loss Deviation	X	X	
Phase Jitter	X	X	
Signal-to-C Notch Noise	X	X	

   The technical specifications are delineated in Technical Reference TR-NPL-000334.

3. The following interfaces are available with WAL Service:

   LO, LS, DS, GO, GS, RV, EA, EB

   Compatible channel interfaces are set forth in Technical Reference TR-NPL-000334.

4. Optional Features and Functions

   a. Two-wire and four-wire Central Office bridging capability.

   b. Improved two-wire voice transmission specifications.

   c. Certain other options associated with WAL services such as WATS Access Line ***(a.k.a. BellSouth SPA WATS Line)*** Nonchargeable Termination Options and Common Switching Optional Features are available as defined in Section E6. preceding. (T)

E7. SPECIAL ACCESS (A.K.A. BELLSOUTH SPA) SERVICE (T)

E7.2 Service Descriptions (Cont'd)

E7.2.3 Voice Grade *(a.k.a. BellSouth SPA DS0 VG)* Service (Cont'd) (T)

F. WATS Access Line (WAL) ***(a.k.a. BellSouth SPA WATS Line)*** service (Cont'd) (T)

4. Optional Features and Functions (Cont'd)

d. One-way or Two-way Capability

E7.2.4 Wired Music Service

A. Basic Channel Description

A Wired Music channel is a channel specified in bandwidth for the transmission of a complex signal voltage. The actual bandwidth is a function of the channel interface selected by the customer. Only one-way transmission is provided. Wired Music channels are provided between customer designated premises and a Company Hub.

B. Technical Specifications Packages

Parameter	**Package AP-**			
	1	**2**	**3**	**4**
Actual Measured Loss	X	X	X	X
Amplitude Tracking				
Crosstalk	X	X	X	X
Distortion Tracking				
Gain/Frequency Distortion	X	X	X	X
Group Delay				
Noise	X	X	X	X
Phase Tracking				
Short Term Gain Stability				
Short-Term Loss				
Total Distortion	X	X	X	X

The technical specifications are delineated in Technical Reference TR-NPL-000337.

C. Channel Interfaces

The following channel interfaces (CIs) define the bandwidths that are available for a Wired Music channel:

CI	**Bandwidth**
PG-3	Nominal frequency from 200 to 3500 Hz
PG-5	Nominal frequency from 100 to 5000 Hz
PG-8	Nominal frequency from 50 to 8000 Hz

Compatible channel interfaces are set forth in Technical Reference TR-NPL-000337.

E7. SPECIAL ACCESS (A.K.A. BELLSOUTH SPA) SERVICE (T)

E7.2 Service Descriptions (Cont'd)

E7.2.4 Wired Music Service (Cont'd)

D. Optional Features and Functions

1. Central Office Bridging Capability
   Distribution Amplifier
2. Gain Conditioning
   Control of 1004 Hz AML at initiation of service to 0db + or - 0.5 dB.

	Available with Technical Specifications Package AP-			
	1	**2**	**3**	**4**
Central Office Bridging Capability	X	X	X	X
Gain Conditioning	X	X	X	X

E7.2.5 Digital Data Access *(a.k.a. BellSouth SPA DS0 Digital Data)* Service (T)

A. Basic Channel Description

A Digital Data ***(a.k.a. BellSouth SPA DS0 Digital Data)*** channel is a channel for duplex four-wire transmission of synchronous serial data at the rate of 2.4, 4.8, 9.6, 19.2, 56 or 64 Kbps. The actual bit rate is a function of the channel interface selected by the customer. The channel provides a synchronous service with timing provided by the Company through the Company's facilities to the customer in the received bit stream. Digital Data ***(a.k.a. BellSouth SPA DS0 Digital Data)*** channels are only available via Company designated Digital Data ***(a.k.a. BellSouth SPA DS0 Digital Data)*** Hubs and are provided between customer designated premises or between a customer designated premises and a Company Digital Data ***(a.k.a. BellSouth SPA DS0 Digital Data)*** Hub. (T)

A Hub termination charge applies per Digital Local Channel. This rate element covers the Hub functions (e.g., timing, testing) for the service.

Secondary Channel Capability (SCC) is a derived companion digital transmission path that is independent of the primary data path and operates at a substantially lower bit rate. This derived channel allows the customer to perform network management functions during the normal operation of the network. This diagnostics channel utilizes a portion of a customer's previously unavailable data bit stream allowing for the ability to remotely control and test the network and peripheral devices without taking the network out of service. Special customer equipment is necessary to utilize the benefits of the Secondary Channel. Customers not wishing to utilize this capability will not be impacted. Due to transmission equipment restrictions, Secondary Channel cannot be provided on 56 Kbps circuits that require the installation of loop repeater equipment for provision of service. Secondary Channel Capability, also, cannot be provided on 64 Kbps circuits, since all of the available bit stream will be used by the customer.

The customer will provide the Channel Service Unit-type equipment or other Network Channel Terminating Equipment associated with the Digital Data ***(a.k.a. BellSouth SPA DS0 Digital Data)*** channel at the customer premises. The interim program for interconnection of such equipment is set forth in Technical Reference PUB AS No. 1. (T)

B. Technical Specifications Packages

	Package DA-					
Parameter	**1**	**2**	**3**	**4**	**5**	**6**
Error-Free Seconds[1]	X	X	X	X	X	X

The Company will provide a channel capable of meeting a monthly average performance equal to or greater than 99.875 percent error-free seconds[1] while the channel is in service, if it is measured through a CSU equivalent which is designed, manufactured, and maintained to conform with the specifications contained in Technical Reference PUB 62310.

Note 1: This channel performance does not apply when the Data Over Voice channel option is used.

E7. SPECIAL ACCESS (A.K.A. BELLSOUTH SPA) SERVICE (T)

E7.2 Service Descriptions (Cont'd)

E7.2.5 Digital Data Access *(a.k.a. BellSouth SPA DS0 Digital Data)* Service (Cont'd) (T)

B. Technical Specifications Packages (Cont'd)

Interface options and service objectives for Digital Data Access ***(a.k.a. BellSouth SPA DS0 Digital Data)*** service are delineated in Technical Reference TR-NPL-000341. (T)

C. Channel Interfaces

The following channel interfaces (CIs) define the bit rates that are available for a Digital Data ***(a.k.a. BellSouth SPA DS0 Digital Data)*** channel: (T)

CI	Bit Rate
DU-24(S)[1]	2.4 Kbps
DU-48(S)[1]	4.8 Kbps
DU-96(S)[1]	9.6 Kbps
DU-19(S)[1]	19.2 Kbps
DU-56(S)[1]	56.0 Kbps
DU-64	64.0 Kbps

Compatible channel interfaces are set forth in Technical Reference TR-NPL-000-341.

D. Optional Features and Functions

1. Central Office Bridging Capability
2. Secondary Channel Capability
3. FlexServ® service ***(a.k.a. BellSouth SPA Customer Reconfiguration)*** (T)

   FlexServ® service ***(a.k.a. BellSouth SPA Customer Reconfiguration)*** provides the customer the ability to monitor and reconfigure Digital Data Access ***(a.k.a. BellSouth SPA DS0 Digital Data)*** service provided by the Company. FlexServ® service ***(a.k.a. BellSouth SPA Customer Reconfiguration)*** is described in E7.4.12 following. Charges for this feature are contained in E7.5.16 following. (T)

4. Data Over Voice Channel

   This option provides a digital data channel derived from a two-wire local exchange facility that transmits voice and data signals simultaneously. The Data Over Voice Channel option may be used in lieu of a Digital Data ***(a.k.a. BellSouth SPA DS0 Digital Data)*** Local Channel. A Hub termination charge is applicable per Data Over Voice Channel in addition to interoffice channel charges as required. A Data Over Voice Channel is provided at the speed of 9.6 Kbps and is furnished between a customer designated premises and the customer's serving wire center. A Data Over Voice Channel is furnished over a customer's existing two-wire local exchange facility. (T)

   The Data Over Voice Channel is provided subject to the availability of appropriate network facilities and equipment and subject to the transmission limitations of the facilities and equipment used by the Company. Customer provided terminal equipment for the Data Over Voice Channel must be compatible with the Company provided terminating equipment at the central office.

The following table shows the technical specifications packages with which the optional features and functions are available.

Note 1: (S) is an additional BellSouth designation for use when the optional Secondary Channel feature is required.

®Registered Service Mark of BellSouth Corporation

E7. SPECIAL ACCESS (A.K.A. BELLSOUTH SPA) SERVICE (T)

E7.2 Service Descriptions (Cont'd)

E7.2.5 Digital Data Access *(a.k.a. BellSouth SPA DS0 Digital Data)* Service (Cont'd) (T)

D. Optional Features and Functions (Cont'd)

4. Data Over Voice Channel (Cont'd)

	Available with Technical Specifications Package DA-					
	1	**2**	**3**	**4**	**5**	**6**
Central Office Bridging Capability	X	X	X	X	X	
Secondary Channel Capability	X	X	X	X	X	
FlexServ® Service ***(a.k.a. BellSouth SPA Customer Reconfiguration)***	X	X	X	X	X	X
Data Over Voice Channel			X			

(T)

The following channel interface (CI) is available for a Data Over Voice Channel.

CI	**Bit Rate**
2DV5.BC	9.6 Kbps, Digital Data Over Voice

Compatible channel interface specifications for the Data Over Voice Channel are set forth in BellSouth TR 73548. This publication is available from the Information Exchange Manager, BellSouth Telecommunications, Inc., Documentations Operations, North W5A1, 3535 Colonnade Parkway, Birmingham, Alabama 35243.

®Registered Service Mark of BellSouth Corporation

E7. SPECIAL ACCESS (A.K.A. BELLSOUTH SPA) SERVICE (T)

E7.2 Service Descriptions (Cont'd)

E7.2.6 High Capacity *(a.k.a. BellSouth SPA High Capacity)* Service (T)

A. Basic Channel Description

A High Capacity ***(a.k.a. BellSouth SPA High Capacity)*** channel is a channel for the transmission of nominal 64.0 Kbps[1] or 1.544, 3.152, 6.312, or 44.736 Mbps isochronous serial data. The actual bit rate is a function of the channel interface selected by the customer. High Capacity ***(a.k.a. BellSouth SPA High Capacity)*** channels are provided between customer designated premises or between a customer designated premises and a Company Hub. (T)

The customer will provide the Network Channel Terminating Equipment associated with the High Capacity ***(a.k.a. BellSouth SPA High Capacity)*** channel at the customer's premises. The interim program for interconnection of such equipment is set forth in Technical Reference PUB AS No. 1. (T)

B. Technical Specifications Packages

	Package HC-					
Parameters	0	1	1C	2	3	4
Error-Free Seconds		X				

Note 1: Available only as a cross connect (through connection) of two 2.4, 4.8, 9.6, 19.2, 56.0 or 64.0 Kbps channels of two 1.544 Mbps facilities to a Digital Data ***(a.k.a. BellSouth SPA DS0 Digital Data)*** Hub(s). The customer must provide system and channel assignment data. (T)

E7. SPECIAL ACCESS (A.K.A. BELLSOUTH SPA) SERVICE (T)

E7.2 Service Descriptions (Cont'd)

E7.2.6 High Capacity *(a.k.a. BellSouth SPA High Capacity)* Service (Cont'd) (T)

B. Technical Specifications Packages (Cont'd)

A channel with technical specifications package HC1 will be capable of an error-free second performance of 98.75 percent over a continuous twenty-four hour period as measured at the 1.544 Mbps rate through a CSU equivalent which is designed, manufactured, and maintained to conform with the specifications contained in Technical Reference TR-NPL-000054.

C. Channel Interfaces

The following channel interfaces (CIs) define the bit rates that are available for a High Capacity ***(a.k.a. BellSouth SPA High Capacity)*** channel: (T)

CI	Bit Rate
DS-15[1]	1.544 Mbps (DS1)
DS-31	3.152 Mbps (DS1C)
DS-44	44.736 Mbps (DS3)
DS-63	6.312 Mbps (DS2)

Compatible channel interfaces are set forth in Technical Reference TA-TSY-000342.

D. Optional Features and Functions

1. Automatic Loop Transfer

The Automatic Loop Transfer provides protection on a 1xn basis against failure of the facilities between a customer designated premises and the wire center serving that premises. Protection is furnished through the use of a switching arrangement that automatically switches to a spare channel line when a working line fails. The spare channel is not included as a part of the option. This option requires compatible equipment at both the serving wire center and the customer premises. The customer is responsible for providing the equipment at its premises. This feature may not be available with lines utilizing the Clear Channel Capability line code (B8ZS).

2. Channelization

a. DS3 to DS1

An arrangement that channelizes a 44.736 Mbps channel to 28 DS1 channels.

b. DS2 to DS1

An arrangement that channelizes a 6.312 Mbps channel to four DS1 channels.

c. DS1C to DS1

An arrangement that channelizes a 3.152 Mbps channel to two DS1 channels.

Note 1: A 64.0 Kbps channel is available as a channel(s) of a 1.544 Mbps facility to a Company hub.

E7. SPECIAL ACCESS (A.K.A. BELLSOUTH SPA) SERVICE (T)

E7.2 Service Descriptions (Cont'd)

E7.2.6 High Capacity *(a.k.a. BellSouth SPA High Capacity)* Service (Cont'd) (T)

D. Optional Features and Functions (Cont'd)

2. Channelization (Cont'd)

e. DS1 Basic Channelization System

An arrangement that channelizes a 1.544 Mbps channel to a maximum of twenty-four 64.0 Kbps channels that may be used to activate both analog and digital services, e.g., voice grade, program audio, and digital data access service. A Basic Channelization System requires a Central Office Channel Interface for each channel of lesser capacity.

f. DS0 Basic Channelization System

An arrangement that channelizes a 64.0 Kbps channel to subspeeds of up to twenty 2.4 Kbps, ten 4.8 Kbps, or five 9.6 Kbps channels. A Basic Channelization System requires a Central Office Channel Interface for each channel of lesser capacity.

3. Channel Interface

a. DS1 Level Central Office Channel Interface

An arrangement for the connection of DS1 (1.544 Mbps) channels to higher order DS3 (44.736 Mbps) services, in Company central office locations.

b. DS1 Level Customer Channel Interface

An arrangement for the connection of DS1 (1.544 Mbps) channels to higher order DS3 (44.736 Mbps) services, at customer locations.

c. DS0 Level Central Office Channel Interface

An arrangement for the connection of VG/DS0 (2.4-64.0 Kbps) channels to higher order DS1 (1.544 Mbps services, in Company central office locations.

d. Subrate Level Central Office Channel Interface

An arrangement for the connection of subrate (2.4-9.6 Kbps) channels to higher order DS0 (64.0 Kbps) services, in Company central office locations.

4. Clear Channel Capability (T)

a. Clear Channel Capability (CCC) is an arrangement that alters a DS1/1.544 Mbps signal with unconstrained information bits, to meet pulse density requirements outlined in TR-NPL-000054 and TA-TSY-000342. This will allow a customer to transport an all zero octet over a DS1/1.544 Mbps High Capacity ***(a.k.a. BellSouth SPA DS1)*** channel, providing an available combined maximum 1.536 Mbps data rate. This arrangement requires the customer signal at the channel interface to conform to Bipolar with 8 Zero Substitution (B8ZS) line code as described in TR-NPL-000054 and TA-TSY-000342. (T)

b. CCC is provided on DS1/1.544 Mbps High Capacity ***(a.k.a. BellSouth SPA DS1)*** channels between two customer designated premises, or between a customer designated premises and a Company Hub location, and is subject to the availability of facilities. This optional feature may be ordered at the same time the DS1/1.544 Mbps High Capacity ***(a.k.a. BellSouth SPA DS1)*** channel is ordered, or it may be ordered as an additional feature of an existing channel. (T)

c. When providing CCC via a DS3/44.736 Mbps High Capacity ***(a.k.a. BellSouth SPA DS3)*** channel, that DS3 channel must be designated, in Company records, as having Clear Channel Capability prior to the provisioning of a DS1/1.544 Mbps High Capacity ***(a.k.a. BellSouth SPA DS1)*** channel with CCC. Customers must agree to out-of-service periods required to add this feature to; 1) an existing DS1/1.544 Mbps High Capacity ***(a.k.a. BellSouth SPA DS1)*** channel or 2) a DS3/44.736 Mbps High Capacity ***(a.k.a. BellSouth SPA DS3)*** channel which transports a DS1/1.544 Mbps High Capacity ***(a.k.a. BellSouth SPA DS1)*** channel, to be optioned for B8ZS. (T)

5. FlexServ® service ***(a.k.a. BellSouth SPA Customer Reconfiguration)*** (T)

FlexServ® service ***(a.k.a. BellSouth SPA Customer Reconfiguration)*** provides the customer the ability to monitor and reconfigure High Capacity ***(a.k.a. BellSouth SPA High Capacity)*** service provided by the Company. FlexServ® service ***(a.k.a. BellSouth SPA Customer Reconfiguration)*** is described in E7.4.12 following. Charges for this feature are contained in E7.5.16 following.

®Registered Service Mark of BellSouth Corporation

E7. SPECIAL ACCESS (A.K.A. BELLSOUTH SPA) SERVICE

E7.2 Service Descriptions (Cont'd)

E7.2.6 High Capacity (a.k.a. BellSouth SPA High Capacity) Service (Cont'd)

D. Optional Features and Functions (Cont'd)

The following table shows the technical specifications packages with which the optional features and functions are available.

	Available With Technical Specifications Package HC-				
	0	**1**	**1C**	**2**	**3**
Automatic Loop Transfer		X			
Channelization					
DS3 to DS1					X
DS2 to DS1				X	
DS1C to DS1			X		
DS1 Basic Channelization System		X			
DS0 Basic Channelization System[1]	X				
Clear Channel Capability		X			
FlexServ® Service (a.k.a. BellSouth SPA Customer Reconfiguration)	X	X			

E7.2.7 Reserved for Future Use

E7.2.8 Reserved for Future Use

E7.2.9 Reserved for Future Use

E7.2.10 Reserved for Future Use

E7.2.11 Reserved for Future Use

E7.2.12 Reserved for Future Use

E7.2.13 Reserved for Future Use

E7.2.14 (DELETED) (D)

Note 1: Available only on 64.0 Kbps DDAS (a.k.a. BellSouth SPA DS0 Digital Data) service or on a DS1 (1.544 Mbps) channel with Clear Channel Capability to a Company hub.

®Registered Service Mark of BellSouth Corporation

E7. SPECIAL ACCESS (A.K.A. BELLSOUTH SPA) SERVICE

E7.2 Service Descriptions (Cont'd)

E7.2.14 (DELETED) (Cont'd) (D)

Material appearing on this page previously appeared on page(s) 21.3 of this section.

E7. SPECIAL ACCESS (A.K.A. BELLSOUTH SPA) SERVICE

E7.2 Service Descriptions (Cont'd)

E7.2.14 (DELETED) (Cont'd) (D)

E7.2.15 Derived Data Channel (a.k.a. BellSouth SPA Derived Data Channel) Service

A. Basic Service Description

Derived Data Channel (a.k.a. BellSouth SPA Derived Data Channel) service (DDCS) provides full-duplex asynchronous or synchronous data transmission utilizing data over voice and subrate multiplexing technology. DDCS (a.k.a. BellSouth SPA Derived Data Channel) provides simultaneous data and voice transmissions over the customer's existing two-wire local exchange facility. A derived data channel is provided between the customer's premises and the customer's serving wire center.

At the customer's serving wire center the data/voice terminating equipment provides subrate multiplexing into a standard DS0-B interface for a group composed of a maximum of twenty derived data channels. The customer's derived data channel must be associated with a DS0-B interface. This association requires coordination between the subscriber of the derived data channel and the subscriber of the DS0-B interface. An interoffice channel is provided for interconnection of the subrate multiplexed DS0-B interface to the serving wire center of a customer designated premises.

DDCS (a.k.a. BellSouth SPA Derived Data Channel) is provided subject to the availability of appropriate network facilities and equipment and subject to the transmission limitations of the facilities and equipment used by the Company.

The customer will be responsible for selecting his own Customer Premises Equipment (CPE). CPE must be compatible with the Company provided terminating equipment at the serving wire center.

B. Channel Interfaces

The following channel interface (CI) is available for DDCS (a.k.a. BellSouth SPA Derived Data Channel) .

CI	Bit Rate
2DV5.BA	2.4 Kbps, Digital Data Over Voice

Compatible channel interface specifications are contained in BellSouth Technical Reference Publication 73548 for data/voice multiplexing equipment and BellSouth Technical Reference 73548, Addendum 1, for the DS0-B interface. These publications are available from the Information Exchange Manager, BellSouth Telecommunications, Inc., Documentations Operations, North W5A1, 3535 Colonnade Parkway, Birmingham, Alabama 35243.

E7. SPECIAL ACCESS (A.K.A. BELLSOUTH SPA) SERVICE

E7.2 Service Descriptions (Cont'd)

E7.2.16 SMARTRing® Service (a.k.a. BellSouth Dedicated Ring)

A. Self-healing Multi-nodal Alternate Route Topology Ring

1. SMARTRing® service (a.k.a. BellSouth Dedicated Ring) is a dedicated, high capacity, network designed to provide increased reliability and functionality via a self-healing ring topology between multiple customer designated locations and Company Central Offices where facilities can be made available as determined by the Company. This network consists of fiber routed through local, alternate central office, internodal and/or interoffice channel facilities that transmit DS1, DS3, STS-1, OC-3, OC-12, ***OC-48*** and/or ***1000 Mbps*** channel services simultaneously over primary and alternate paths between customer designated locations and Company Central Offices. This ring topology will continually monitor DS1, DS3, STS-1, OC-3, OC-12, ***OC-48*** and/or ***1000 Mbps*** service quality, detect any failure within the system, and automatically self-heal around a point of failure to ensure the flow of DS1, DS3, STS-1, OC-3, OC-12, ***OC-48*** and/or ***1000 Mbps services*** between locations within the network. (C)
2. SMARTRing® service (a.k.a. BellSouth Dedicated Ring) is available at OC-1, OC-3, OC-3+ OC-12, OC-48, OC-48+, ***OC-192*** and ***OC-192+*** capacities. (C)
3. OC-1 SMARTRing® service (a.k.a. BellSouth Dedicated Ring) is available only in Overlay Ring Arrangements riding the customer's host OC-12, OC-48, or OC-48+ SMARTRing® service (a.k.a. BellSouth Dedicated Ring). The OC-1 SMARTRing® service (a.k.a. BellSouth Dedicated Ring) shares the transport of its host SMARTRing® service (a.k.a. BellSouth Dedicated Ring). OC-1 SMARTRing® service (a.k.a. BellSouth Dedicated Ring) provides an equivalent capacity of 28 DS1s or one STS-1. When an OC-1 SMARTRing® service (a.k.a. BellSouth Dedicated Ring) overlays an OC-12, OC-48, or OC-48+ SMARTRing® service (a.k.a. BellSouth Dedicated Ring), an OC-1 channel interface is required.
4. OC-3 SMARTRing® service (a.k.a. BellSouth Dedicated Ring) is available as an individual service or in an Overlay Ring Arrangement riding the customer's host OC-12, OC-48, OC-48+, ***OC-192,*** or ***OC-192+*** SMARTRing® service (a.k.a. BellSouth Dedicated Ring). OC-3 SMARTRing® service (a.k.a. BellSouth Dedicated Ring) provides an equivalent capacity of 3 DS3s, or any combination thereof not to exceed an OC-3 capacity. (C)

   Channel Interface Reallocation allows the customer to reallocate STS-1, DS3 and/or DS1 capacities to OC-3 nodes subsequent to the initial configuration of an OC0-3 ring.
5. OC-3+ SMARTRing® service (a.k.a. BellSouth Dedicated Ring) is available as an individual service, or in combination with OC-12 SMARTRing® service (a.k.a. BellSouth Dedicated Ring), or in an Overlay Ring Arrangement riding the customer's host OC-48***, OC-48+, OC-192, or OC-192+*** SMARTRing® service (a.k.a. BellSouth Dedicated Ring). OC-3+ SMARTRing® service (a.k.a. BellSouth Dedicated Ring) provides an equivalent OC-3 capacity, not to exceed 3 DS3s at each node, with a maximum ring capacity of 12 DS3s, not to exceed an OC-12 ring capacity. (C)
6. When a customer orders OC-3+ SMARTRing® service (a.k.a. BellSouth Dedicated Ring) in combination with OC-12 SMARTRing® service (a.k.a. BellSouth Dedicated Ring), capacity and channel interface availability at each Customer Node and Central Office Node location is determined by the size node ordered by the customer.
7. OC-12 SMARTRing® service (a.k.a. BellSouth Dedicated Ring) is available as an individual service, or in combination with OC-3+ SMARTRing® service (a.k.a. BellSouth Dedicated Ring), or in an Overlay Ring Arrangement riding the customer's host OC-48***, OC-48+, OC-192, or OC-192+*** SMARTRing® service (a.k.a. BellSouth Dedicated Ring). OC-12 SMARTRing® service (a.k.a. BellSouth Dedicated Ring) provides an equivalent capacity of 12 DS3s. (C)
8. OC-48 SMARTRing® service (a.k.a. BellSouth Dedicated Ring) is available as an individual service, ***or in an Overlay Ring Arrangement riding the customer's host OC-192 or OC-192+ SMARTRing® service (a.k.a. BellSouth Dedicated Ring),*** or with overlaying rings in capacities of OC-1, OC-3, OC-3+ and/or OC-12. OC-48 SMARTRing® service (a.k.a. BellSouth Dedicated Ring) provides an equivalent capacity of 48 DS3s. (C)
9. OC-48+ SMARTRing® service (a.k.a. BellSouth Dedicated Ring) is available as an individual bi-directional service, ***or in an Overlay Ring Arrangement riding the customer's host OC-192 SMARTRing® service (a.k.a. BellSouth Dedicated Ring),*** or with overlaying rings in capacities of OC-1, OC-3, ***OC-3+*** and/or ***OC-12***. It provides equivalent capacity of 24 DS3s between consecutive node locations on the ring. The maximum capacity of the OC-48+ SMARTRing® service (a.k.a. BellSouth Dedicated Ring) is determined by the number of Customer and Central Office nodes on the ring. (C)
10. OC-192 SMARTRing® service (a.k.a. BellSouth Dedicated Ring) is available as an individual service, or with overlaying rings in capacities of OC-3, OC-3+, OC-12, OC-48 and /or OC-48+. OC-192 SMARTRing® service (a.k.a. BellSouth Dedicated Ring) provides an equivalent capacity of 192 DS3s. (N)
11. OC-192+ SMARTRing® service (a.k.a. BellSouth Dedicated Ring) is available as an individual bi-directional service, or with overlaying rings in capacities of OC-3, OC-3+, OC-12 and /or OC-48. It provides equivalent capacity of 96 DS3s between consecutive node locations on the ring. The maximum capacity of the OC-192+ SMARTRing® service (a.k.a. BellSouth Dedicated Ring) is determined by the number of Customer and Central Office nodes on the ring. (N)

All BellSouth marks contained herein are owned by BellSouth Intellectual Property Corporation

E7. SPECIAL ACCESS (A.K.A. BELLSOUTH SPA) SERVICE

E7.2 Service Descriptions (Cont'd)

E7.2.16 SMARTRing Service (a.k.a. BellSouth Dedicated Ring) (Cont'd)

A. Self-healing Multi-nodal Alternate Route Topology Ring (Cont'd)

12. SMARTRing service (a.k.a. BellSouth Dedicated Ring) Channel Interfaces are available as follows:

	Nodes								
Channel Interfaces	**OC-1**	**OC-3**	**OC-3+**	**OC-12**	**OC-48**	**OC-48+**	**OC-192**	**OC-192+**	
DS1	Yes	Yes	Yes	No[1]	No[1]	No[1]	No[1]	No[1]	
DS3	No	Yes	Yes	Yes	Yes	Yes	Yes	Yes	
STS-1	Yes	Yes	Yes	Yes	Yes	Yes	Yes	Yes	
OC-1[2]	No	No	No	Yes	Yes	Yes	Yes	Yes	
OC-3	No	No	No	Yes	Yes	Yes	No	No	
OC-12	No	No	No	No	Yes	Yes	Yes	Yes	
28 DS1 Channel System (DS3)	No	Yes	Yes	Yes	Yes	Yes	Yes	Yes	
28 DS1 Channel System (STS-1)	No	Yes	Yes	Yes	Yes	Yes	Yes	Yes	
1000 Mbps	No	No	No	No	Yes[3]	Yes[3]	Yes	Yes	
100 Mbps BellSouth Metro Ethernet Backbone[4]	No	No	No	Yes	Yes	Yes	Yes	Yes	
1000 Mbps BellSouth Metro Ethernet Backbone	No	No	No	No	Yes	Yes	Yes	Yes	
Fractional 1000 Mbps at 150 Mbps, 300 Mbps or 450 Mbps BellSouth Metro Ethernet Backbone[5]	No	Yes	Yes	Yes	Yes	Yes	Yes	Yes	(N)
Fractional 1000 Mbps at 600 Mbps BellSouth Metro Ethernet Backbone[5]	No	No	No	No	Yes	Yes	Yes	Yes	(N)

13. SMARTRing service (a.k.a. BellSouth Dedicated Ring) Overlay Ring Arrangements are available as follows:

Overlaying SMARTRing service (a.k.a. BellSouth Dedicated Ring)	**Host SMARTRing service (a.k.a. BellSouth Dedicated Ring)**				
	OC-12	OC-48	OC-48+	OC-192	OC-192+
OC-1	X	X	X	X	X
OC-3	X	X	X	X	X
OC-3+		X	X	X	X
OC-12		X	X	X	X
OC-48				X	X
OC-48+					X

Note 1: DS1 interfaces are available via OC-1, OC-3, and OC-3+ Overlay Ring Arrangements or 28 DS1 Channel Systems only.

Note 2: OC-1 interfaces are only available for use with OC-1 Overlay Ring Arrangements.

Note 3: 1000 Mbps interfaces are only available for rings installed after November 12, 2003. 1000 Mbps transport channel interfaces do not contain any monitoring capability above the physical layer.

Note 4: 100 Mbps BellSouth Metro Ethernet Backbone interfaces are further defined regarding the number of STS-1s utilized in conjunction with the interface.

All BellSouth marks contained herein and as set forth in the trademarks and servicemarks section of this Tariff are owned by BellSouth Intellectual Property Corporation.

E7. SPECIAL ACCESS (A.K.A. BELLSOUTH SPA) SERVICE

E7.2 Service Descriptions (Cont'd)

E7.2.16 SMARTRing Service (a.k.a. BellSouth Dedicated Ring) (Cont'd) (N)

14. Self-healing Multi-nodal Alternate Route Topology Ring (Cont'd) SMARTRing service (a.k.a. BellSouth Dedicated Ring) is connectible at Company Central Offices to any 44.736 Mbps and/or 1.544 Mbps services as provided in Section E7. of this Tariff. Rates and charges for such other services are as set forth in the applicable sections of this tariff for such other services. (M)

15. Shared Network Arrangements will not be provided with SMARTRing service (a.k.a. BellSouth Dedicated Ring) at the ring level. Shared Network Arrangements as defined in E2.6 preceding apply to DS1 channel interfaces only. (M)

    The customer must provide suitable floor space, controlled environment, and source of non-switched suitable power to support this service. (M)

16. Where the customer provides two separate entrance facility cable routes for SMARTRing service (a.k.a. BellSouth Dedicated Ring), the primary and alternate entrance facilities will be separate and will enter the customer node over such different routes. When the customer requests a connection at a Customer Node via two local channels and Company facilities do not exist for the second Local Channel, the Company may provide an equivalent second Local Channel via an existing alternate route. When facilities become available for the second Local Channel, the Company may rearrange the alternate route at any time. (M)

17. When the distance between nodes on a SMARTRing service (a.k.a. BellSouth SPA Dedicated Ring) is such that optical signal regeneration is required, then regeneration equipment will be provided at no additional charge to the customer to assure proper operation of the service. In some cases regeneration will be provided via SONET Add/Drop equipment called a Regeneration Node. A Regeneration Node does not contain the capability to add or drop services. Accordingly, FlexServ service (a.k.a. BellSouth SPA Customer Reconfiguration) Customer Network Management may not be ordered with a Regeneration Node, however, a customer may monitor a Regeneration Node via the FlexServ service (a.k.a. BellSouth SPA Customer Reconfiguration) Customer Network Management Surveillance option when a customer has established surveillance for a ring. Regeneration Node Surveillance is provided as a part of the charges associated with the customer's ring level FlexServ service (a.k.a. BellSouth SPA Customer Reconfiguration) Customer Network Management Surveillance. Regeneration Node and Regeneration Node Surveillance, as applicable, will appear on a customer's records as non-rated USOC(s), as follows: (M)

	USOC	
Regeneration Node, all ring capacities, non-rated	**SHNRD**	(M)
Regeneration Node Surveillance, all ring capacities, non-rated	**SHNRS**	(M)

18. Effective February 16, 2007, Shared Node Interconnection is available, based on equipment capability, whereby two SMARTRing service arrangements belonging to the same customer may share a node in a central office that is common to both rings. Shared Node Interconnection capability is available based on equipment capability. With Shared Node Interconnection, one of the rings (i.e., the larger capacity ring) is considered the Primary Ring and the other ring is considered the Secondary Ring. Primary Rings may be an OC-12, OC-48 or an OC-192 ring. A Secondary Ring is always a lower capacity ring than that of the Primary Ring. The various Shared Node Interconnection service arrangements that are available are as follows: (N)

Shared Node Interconnection Primary Ring Capacity	**Shared Node Interconnection Secondary Ring Capacity Available For Use With Primary Rings**				
	OC-3	OC-12	OC-48	OC-48+	(N)
OC-12	X				(N)
OC-48	X	X			(N)
OC-192	X	X	X	X	(N)

With Shared Node Interconnection, the Primary Ring shall have a Central Office Node and the Secondary Ring shall have a Shared Node Interconnection Central Office Node in the central office associated with the ring interconnection. For the Secondary Ring, a Shared Node Interconnection Central Office Node is considered toward meeting the three node minimum requirement for the Secondary Ring. This shared node will utilize capacity of the Primary Ring node, based on the size of the Secondary Ring, and will count toward the capacity the customer has available at the location. Should the customer require more capacity at a shared node central office location than is available on the Primary Ring node, then additional billable service components will be required. (N)

Only one Shared Node Interconnection arrangement is available for an individual Central Office Node on a Primary Ring. (N)

Reconfiguration is not allowed at central office nodes that are configured for Shared Node Interconnection. (N)

All BellSouth marks contained herein and as set forth in the trademarks and service marks section of the BellSouth Tariffs are owned by BellSouth Intellectual Property Corporation.

E7. SPECIAL ACCESS (A.K.A. BELLSOUTH SPA) SERVICE

E7.2 Service Descriptions (Cont'd)

E7.2.16 SMARTRing Service (a.k.a. BellSouth Dedicated Ring) (Cont'd)

(M)

B. Technical Specifications Packages

1. The compatibility requirements, technical specifications, and generic requirements for SMARTRing service (a.k.a. BellSouth Dedicated Ring) terminated at the customers designated locations are referenced in Technical Reference ANSI T1.404-1994, ANSI T1.403-1989 and ANSI T1.105-1991.
2. DS3 interface combinations and technical specifications are referenced in Bellcore TR-INS-000342.
3. DS1 interface combinations and technical specifications are referenced in Bellcore TR-NPL-000054.
4. STS-1, OC-1, OC-3, and OC-12 interface combinations and technical specifications are referenced in BellSouth Telecommunications, Inc. Technical Reference TR-73582.
5. These self-healing multi-nodal DS3 high capacity (a.k.a. BellSouth SPA DS3) service channels have a long term performance objective of 99.5 percent error-free seconds and a severely errored second (SES) objective of less than 0.009 percent SES when the circuit is available. Self-healing multi-nodal DS1 high capacity (a.k.a. BellSouth SPA DS1) service channels have a long term performance objective of 99.95 percent error-free seconds.

E7.2.17 Reserved For Future Use

Material previously appearing on this page now appears on page(s) 21.5.1 of this section.

All BellSouth marks contained herein and as set forth in the trademarks and servicemarks section of this Tariff are owned by BellSouth Intellectual Property Corporation.

E7. SPECIAL ACCESS (A.K.A. BELLSOUTH SPA) SERVICE

E7.2 Service Descriptions (Cont'd)

E7.2.18 BellSouth Metro Ethernet Service

A. BellSouth Metro Ethernet service is a high-speed packet transport that is based on Ethernet transmission parameters. BellSouth Metro Ethernet service provides various transport capabilities that range from 2 Mbps through 1 Gbps with capabilities for basic, premium, dedicated and virtual arrangements that may be used to meet individual customer needs.

B. BellSouth Metro Ethernet service signals meet IEEE 802.3, 802.3u, or 802.3z standards. BellSouth Metro Ethernet service also uses 802.1Q VLAN tagging and stacking for certain service configurations contained herein. Technical requirements for interfaces with customer premises equipment (CPE) are contained in ANSI/IEEE 802.3-2002 Specifications.

C. BellSouth Metro Ethernet service interface specifications are set forth in BellSouth Technical Reference TR-73632. Technical limitations associated with provisioning 2 Mbps, 4 Mbps and 8 Mbps BellSouth Metro Ethernet Connections based upon distance from the customer's premises to serving wire center and equipment configurations exist and are also set forth in TR-73632.

D. The rates and charges set forth in E7.5.22 following for BellSouth Metro Ethernet service provide for the furnishing of service in certain metropolitan areas where suitable Company facilities are available. In locations where BellSouth Metro Ethernet service is not available, special construction charges may apply.

E. A LAN (local area network) is a communications network spanning a limited geographical area. A LAN connects computers and other peripheral equipment for data communications purposes within a building or campus environment.

F. A VLAN (virtual local area network) is a logical grouping of Metro Ethernet connections that allows data transmission between such connections to occur as if all connections are on the same physical LAN.

G. Metro Ethernet is a service where Local Area Networks (LANs) send bi-directional Ethernet traffic to other LANs on an Ethernet Wide Area Network (WAN). Ethernet is one of the most widely deployed LAN/WAN standards. BellSouth Metro Ethernet service supports IEEE Standard 802.3, 802.3u and 802.3z transmission standards.

H. A Metro Ethernet Customer Network is defined as the set of interconnected Metro Ethernet connections assigned to the same VLAN within the BellSouth core network. Premium Connections that include the Q-Forwarding optional feature described in O. following and Virtual Connections that include the VLAN Aggregation optional feature described in P. following may be part of more than one Metro Ethernet Customer Network.

I. A Basic BellSouth Metro Ethernet service Connection provides 2 Mbps, 4 Mbps, 8 Mbps, 10 Mbps, 100 Mbps and 1 Gbps Ethernet capabilities that are a part of a BellSouth Metro Ethernet service network within a metropolitan area. Basic BellSouth Metro Ethernet service is a best effort service with service capabilities that are affected by overall traffic on the Basic BellSouth Metro Ethernet service network and is suitable for data transmission only.

A Basic BellSouth Metro Ethernet service connection operating at any of these speeds is capable of interconnecting with other Basic BellSouth Metro Ethernet service Connections that are operating at any of these speeds in the same metropolitan area.

A Basic BellSouth Metro Ethernet service connection provides data channel transport that connects customer premises[1] that are 10 miles or less in distance from the BellSouth Metro Ethernet service wire center associated with the Basic BellSouth Metro Ethernet service Connection. Customer locations[1] greater than 10 miles from the Basic BellSouth Metro Ethernet service wire center also require BellSouth Metro Ethernet service Additional Mileage charges.

Note 1: And as alternatively set forth in E7.4.32.A.5. ***and 6***.following. (C)

All BellSouth marks contained herein and as set forth in the trademarks and servicemarks section of this Tariff are owned by BellSouth Intellectual Property Corporation.

E7. SPECIAL ACCESS (A.K.A. BELLSOUTH SPA) SERVICE

E7.2 Service Descriptions (Cont'd)

E7.2.18 BellSouth Metro Ethernet Service (Cont'd)

J. A Premium BellSouth Metro Ethernet service Connection provides 2 Mbps, 4 Mbps, 8 Mbps, 10 Mbps, 20 Mbps, 50 Mbps, 100 Mbps, 250 Mbps, 500 Mbps and 900 Mbps Ethernet capabilities that are a part of a BellSouth Metro Ethernet service network within a metropolitan area. Premium BellSouth Metro Ethernet service provides the ability to order Ethernet Service with improved service characteristics to meet customer needs regarding the assurance of bandwidth availability.

Premium BellSouth Metro Ethernet service provides customer capabilities to assure service characteristics via ordering a Committed Bandwidth (CBW). A CBW is the minimum bandwidth across the BellSouth Metro Ethernet service network within a metropolitan area between a customer's Premium BellSouth Metro Ethernet service locations.

Premium BellSouth Metro Ethernet service Connections are available with "Fixed" and "Burst" capabilities unless specified otherwise[1]. With the Fixed arrangement, Premium BellSouth Metro Ethernet service Connections will have the bandwidth ordered (e.g., 10 Mbps) available across the BellSouth Metro Ethernet service network. With the Burst arrangement, Premium BellSouth Metro Ethernet service Connections will have the ability to send burst of data above their CBW rate, if network capacity ***and facilities are*** available. For example, a 10 Mbps, a 20 Mbps and a 50 Mbps Connection may Burst up to 100 Mbps, while a 100 Mbps, a 250 Mbps and a 500 Mbps Connection may Burst up to 1 Gbps. (C)

A Premium BellSouth Metro Ethernet service Connection operating at any of these speeds is capable of interconnecting with other Premium BellSouth Metro Ethernet service Connections that are operating at any of these speeds in the same metropolitan area.

A Premium BellSouth Metro Ethernet service Connection provides data channel transport that connects customer premises[2] that are 10 miles or less in distance from the BellSouth Metro Ethernet service wire center associated with the Premium BellSouth Metro Ethernet service Connection. Customer locations[2] greater than 10 miles from the Premium BellSouth Metro Ethernet service wire center also require BellSouth Metro Ethernet service Additional Mileage charges.

Note 1: Premium Connections at 2 Mbps, 4 Mbps, 8 Mbps and 900 Mbps are available only as Fixed arrangements (i.e., "Burst" capability is not available).

Note 2: And is alternatively set forth in E7.4.32.A.5. and 6. following.

All BellSouth marks contained herein and as set forth in the trademarks and service marks section of the BellSouth Tariffs are owned by BellSouth Intellectual Property Corporation.

E7. SPECIAL ACCESS (A.K.A. BELLSOUTH SPA) SERVICE

E7.2 Service Descriptions (Cont'd)

E7.2.18 BellSouth Metro Ethernet Service (Cont'd)

K. A Dedicated BellSouth Metro Ethernet service Connection provides 100 Mbps and 1 Gbps point-to-point Ethernet capabilities that are part of a BellSouth Metro Ethernet service network within a metropolitan area. A Dedicated BellSouth Metro Ethernet service Connection operating at either of these speeds is only capable of interconnecting with one other Dedicated BellSouth Metro Ethernet service Connection in the same metropolitan area.

A Dedicated BellSouth Metro Ethernet service Connection provides data channel transport that connects customer premises[1] that are 10 miles or less in distance from the BellSouth Metro Ethernet service wire center associated with the Dedicated BellSouth Metro Ethernet service Connection. Customer locations[1] greater than 10 miles from the Dedicated BellSouth Metro Ethernet service wire center also require BellSouth Metro Ethernet service Additional Mileage charges.

L. A Virtual BellSouth Metro Ethernet Service Connection provides 2 Mbps, 4 Mbps, 8 Mbps, 10 Mbps, 20 Mbps, 50 Mbps, 80 Mbps, 100 Mbps, 200 Mbps, 300 Mbps, 450 Mbps, 600 Mbps, 750 Mbps and 900 Mbps Ethernet capabilities that are a part of a BellSouth Metro Ethernet Service network within a metropolitan area. Virtual BellSouth Metro Ethernet Service provides the ability to order Ethernet Service where a single customer connection can support multiple applications with varying Quality of Service (QoS) features and Classes of Service.

Virtual BellSouth Metro Ethernet Service provides customer capabilities to support different Classes of Service (CoS) (i.e., Real-Time, Interactive, Business Critical and Best Effort as described in E7.2.18.T) over the same Connection and offers customers increased flexibility to match bandwidth to their real needs for voice/data/video applications on each Connection. The customer orders the percentage of their Virtual BellSouth Metro Ethernet Service Connection bandwidth that will be allocated for each class of service.

For each Virtual Connection, the customer's bandwidth will be limited to the fixed speed associated with each CoS level specified in the CoS profile selected for the Virtual Connection.

A Virtual BellSouth Metro Ethernet Service Connection operating at any of these speeds is capable of interconnecting with other Virtual BellSouth Metro Ethernet Service Connections that are operating at any of these speeds in the same metropolitan area.

A Virtual BellSouth Metro Ethernet Service Connection provides data channel transport that connects customer premises[1] that are 10 miles or less in distance from the BellSouth Metro Ethernet Service wire center associated with the Virtual BellSouth Metro Ethernet Service Connection. Customer locations[1] greater than 10 miles from the Virtual BellSouth Metro Ethernet Service wire center also require BellSouth Metro Ethernet Service Additional Mileage charges.

Note 1: And as alternatively set forth in E7.4.32.A.5. ***and 6***. following. (C)

All BellSouth marks contained herein and as set forth in the trademarks and servicemarks section of this Tariff are owned by BellSouth Intellectual Property Corporation.

E7. SPECIAL ACCESS (A.K.A. BELLSOUTH SPA) SERVICE

E7.2 Service Descriptions (Cont'd)

E7.2.18 BellSouth Metro Ethernet Service (Cont'd)

M. BellSouth Metro Ethernet service Additional Mileage charges associated with a BellSouth Metro Ethernet service Connection apply when the total distance from the customer premises[1] to the BellSouth Metro Ethernet service wire center associated with the service serving the customer premises[1] is greater than 10 miles in length. The additional mileage is measured in airline miles from the customer premises[1] to the BellSouth Metro Ethernet service wire center associated with the BellSouth Metro Ethernet service. Fractions of miles will be considered as a whole mile.

BellSouth Metro Ethernet service Additional Mileage charges apply to Basic, Premium, Dedicated and Virtual BellSouth Metro Ethernet service based on the service's speed and the total distance associated with the data channel. The BellSouth Metro Ethernet service Additional Mileage Charge is based on the mileage band the total data channel mileage falls into. For example, a data channel that is 30 miles in length would be charged the additional mileage rate for the greater than 25 mile through 35 mile band.

N. Priority Plus is an optional feature available to customers with Premium BellSouth Metro Ethernet service. Priority Plus provides the customer with the ability to prioritize their traffic in accordance with a predefined hardware queue model approach. With this option, customers will assign priority values to their data and higher-priority data will be transmitted first. Priority Plus service traffic is limited to a small subset of the total Committed Bandwidth (CBW) traffic and is marked for expedited handling within the Metro Ethernet Service. Customers that desire Priority Plus must establish it for all of their Premium BellSouth Metro Ethernet service Connections within that Metro Ethernet Customer Network.

O. Q-Forwarding is an optional feature available to customers with Premium BellSouth Metro Ethernet service. Q-Forwarding provides VLAN aggregation across a common physical connection. This feature supports customer aggregation of traffic from multiple Metro Ethernet Customer Networks (referred to as VLANS). This aggregated traffic can be transported back to a central location and across a common Metro Ethernet Service Connection (referred to as the "aggregation" connection). Q-Forwarding utilizes IEEE 802.1Q VLAN Tagging procedures.

While Q-Forwarding is available with BellSouth Premium Metro Ethernet Connections at 2 Mbps, 4 Mbps and 8 Mbps, this feature is subject to technical limitations set forth in Technical Reference 73632 when used with these speed connections.

With Q-Forwarding, special technical considerations set forth in Technical Reference 73632 must be taken into account to determine the customer's CBW across their BellSouth Metro Ethernet Network.

The Q-Forwarding Service Establishment Charge is a charge to provision a Premium Metro Ethernet Connection with the Q-Forwarding feature and identify it as an "aggregation" connection.

The Q-Forwarding Network Assignment Charge is a charge to provision each Metro Ethernet Customer Network to the Q-Forwarding "aggregation" connection. The Q-Forwarding Network Assignment Charge applies for each VLAN connected to the Q-Forwarding "aggregation" connection.

P. VLAN Aggregation is an optional feature available to customers with Virtual BellSouth Metro Ethernet Service. VLAN Aggregation provides VLAN aggregation across a common physical connection. This feature supports customer aggregation of traffic from multiple Metro Ethernet Customer Networks (referred to as VLANS) comprised of Virtual Connections. This aggregated traffic can be transported back to a central location and across a common Virtual Metro Ethernet Service Connection (referred to as the "aggregation" connection). VLAN Aggregation utilizes IEEE 802.1Q VLAN Tagging procedures.

While VLAN Aggregation is available with BellSouth Virtual Metro Ethernet Connections at 2 Mbps, 4 Mbps and 8 Mbps, this feature is subject to technical limitations set forth in Technical Reference 73632 when used with these speed connections.

The VLAN Aggregation Service Establishment Charge is a charge to provision a Virtual Metro Ethernet Connection with this feature and identify it as an "aggregation" connection.

The VLAN Aggregation Network Assignment Charge is a charge to provision each Virtual Ethernet Customer Network to the "aggregation" connection. The VLAN Aggregation Network Assignment Charge applies for each VLAN connected to the "aggregation" connection.

(M)

Note 1: And as alternatively set forth in E7.4.32.A.5. and 6. following.

Material previously appearing on this page now appears on page(s) 21.9 of this section.

All BellSouth marks contained herein and as set forth in the trademarks and service marks section of the BellSouth Tariffs are owned by BellSouth Intellectual Property Corporation.

E7. SPECIAL ACCESS (A.K.A. BELLSOUTH SPA) SERVICE

E7.2 Service Descriptions (Cont'd)

E7.2.18 BellSouth Metro Ethernet Service (Cont'd)

Q. ***Customer Network Management (CNM)*** **-** Metro Ethernet Reporting is an optional feature available to customers with Premium or Virtual BellSouth Metro Ethernet service. ***CNM*** **-** Metro Ethernet Reporting provides customers a view into their BellSouth Metro Ethernet service network via the use of a web interface and security card. ***CNM*** **-** Metro Ethernet Reporting provides alarm surveillance, service level agreement reporting and performance reporting for the various network components that comprise the customer's BellSouth Metro Ethernet service network. This feature is only available to customers purchasing Premium or Virtual BellSouth Metro Ethernet service. (M)(T)

Customers who subscribe to ***CNM*** **-** Metro Ethernet Reporting must monitor their entire BellSouth Metro Ethernet Network. The ***CNM*** **-** Metro Ethernet Reporting Charge is applicable for each Premium or Virtual Metro Ethernet Service Connection. (M)(T)

The ***CNM*** **-** Metro Ethernet Reporting Service Establishment Charge is a nonrecurring charge that applies to initially establish a new Metro Ethernet Service customer account. A customer with an existing ***CNM*** **-** Metro Ethernet Reporting customer account from another BellSouth jurisdiction may re-use that customer account. (M)(T)

All customers purchasing ***CNM*** **-** Metro Ethernet Reporting must have a web interface that will allow the customer to access and monitor their network via the web. Each web interface provides for one concurrent access. Additional concurrent accesses will require additional web interfaces. An initial web interface (Web Interface Charge - First) is provided with the initial establishment of a customer account. A monthly charge and a nonrecurring charge are applicable for each additional web interface requested for a customer account (Web Interface Charge – Each Additional). (T)

A security card is required to access a web interface. Each security card can only be used for a single concurrent access and can be associated with only one web interface. A Security Card Charge will apply for the initial and additional cards requested and for the issuance of additional cards to replace lost, damaged or expired cards. A nonrecurring charge is applicable per security card requested.

R. BellSouth Metro Ethernet service Customer networks comprised of Premium Connections or Virtual Connections with ***CNM*** **-** Metro Ethernet Reporting are provided Service Level Agreements (SLAs) for the Company's repair and performance commitments for this service. Credits are provided for missed commitments on such service. The specific SLA commitments and credits applicable are set forth in E7.4.32.C. following for Premium Connections and in E7.4.32.D. for Virtual Connections. (T)

S. Subsequent to its initial installation, a customer may request to reconfigure or change a BellSouth Metro Ethernet service Connection. The Service Reconfiguration Charge or System Reconfiguration Charge will be the nonrecurring charge applicable for such a request; the appropriate nonrecurring charge will be based upon the reconfiguration or change requested, as specifically described and set forth in E7.4.32 following.

T. For each Virtual BellSouth Metro Ethernet Connection the customer must decide the mix of applications that will be supported on that Connection, the CoS mix that Virtual Connection must support, and the percentage of bandwidth to be assigned for each CoS (i.e., build a CoS profile for each Virtual Connection). The customer's bandwidth will be limited to the fixed speed associated with each CoS level. Therefore, total bandwidth available to support transmission of a specific CoS will depend upon the size of the customer's Connection and the specific CoS percentage the customer selected for that Connection.

A customer may request a single CoS or up to four CoS to build the CoS Profile for a Virtual Connection. The customer determines the percentage bandwidth each CoS selected should be of the total Virtual Connection's bandwidth. The sum of the percentages for each CoS selected for a Virtual Connection must equal 100%. Additionally, the combined CoS bandwidth percentages selected in a customer's CoS Profile for Real-Time CoS plus Interactive CoS may not exceed 50%, except where the customer selects the 70% Real-Time CoS bandwidth percentage and has no Interactive traffic.

A customer may select different CoS profiles for different Virtual Connections that share the same network VLAN, or Virtual Connection network arrangement. However, technical limitations exist as discussed in TR-73632 that limit the total number of different CoS profiles that can be utilized in a single Virtual Connection network arrangement.

All BellSouth marks contained herein and as set forth in the trademarks and service marks section of the BellSouth Tariffs are owned by BellSouth Intellectual Property Corporation.

E7. SPECIAL ACCESS (A.K.A. BELLSOUTH SPA) SERVICE

E7.2 Service Descriptions (Cont'd)

E7.2.18 BellSouth Metro Ethernet Service (Cont'd)

T. (Cont'd) (N)

The CoS and percentage bandwidth selected for a Virtual Connection will define the applications that can be supported and its Quality of Service (QoS) attributes such as traffic priority, latency, packet loss rate, etc. QoS attributes are defined for each CoS. Each Virtual Connection will support Ethernet traffic representing one or more applications and CoS. Virtual Connections support the four following CoS: (N)

- Real-Time[1]: This CoS supports VoIP applications. The Real-Time CoS is supported by a low latency queue. The Low Latency Queuing (LLQ) feature in the Ethernet network is used for support of the Real-Time CoS. (N)
- Interactive[1]: This CoS supports interactive Video applications. The Interactive CoS is policed to a maximum bandwidth. (N)
- Business Critical: This CoS supports mission-critical business data applications. These applications tend to be data specific and may include medical imaging, electronic funds transfer, medical records transfer, etc. (N)
- Best Effort: This CoS is the default CoS for all other traffic that is not defined as Business Critical, Real-Time or Interactive. Traffic that does not match the other CoS will be mapped as Best Effort. Traffic with the Best Effort CoS will have the lowest priority on the network and will support lower priority data applications, such as email and file transfer protocol (FTP). (N)

Each customer packet from a Virtual Connection will be classified and assigned to a specific CoS by methods identified in TR-73632. (N)

Note 1: The combined CoS bandwidth percentages selected in a customer's Virtual Connection CoS profile for Real-Time CoS plus Interactive CoS may not exceed 50%, except where the customer selects the 70% Real-Time CoS bandwidth percentage and has no Interactive traffic. (N)

All BellSouth marks contained herein and as set forth in the trademarks and service marks section of the BellSouth Tariffs are owned by BellSouth Intellectual Property Corporation.

E7. SPECIAL ACCESS (A.K.A. BELLSOUTH SPA) SERVICE

E7.2 Service Descriptions (Cont'd)

E7.2.18 BellSouth Metro Ethernet Service (Cont'd)

U. Automatic Protection Switching (APS) is an optional feature available, except as specified otherwise herein, to customers with a Basic, Premium or Virtual BellSouth Metro Ethernet Service Connection of 10 Mbps or higher[1]. The APS feature provides customers with the option of having data channel (i.e., facilities from the customer premises to the BellSouth Metro Ethernet Service wire center) survivability through the use of a secondary transport path that is diverse from the path provided with their primary Metro Ethernet Connection. This secondary transport path (i.e., data channel) is provided for a specific Metro Ethernet Connection (i.e., the primary) with the selection of the APS feature which then provides the customer with complete path protection. However, APS is not available for a 2 Mbps, 4 Mbps or 8 Mbps Connection.

With APS, the primary Metro Ethernet Connection's data channel is monitored for threshold violations or path failures with a fail-over to the secondary data channel path provided via the APS feature. The APS data channel is checked periodically to ensure its availability if a failure of the primary Metro Ethernet Connection's data channel occurs.

APS may be ordered as a structurally diverse transport path (Structural Protection) or a route diverse transport path (Route Protection).

Structural Protection APS is defined as the APS facility and the primary Metro Ethernet Connection facility being in separate sheaths in separate structures located along the same route (e.g., underground/underground, buried/underground, aerial/underground, aerial/buried, buried/buried, and aerial/aerial), or along different routes at the Telephone Company's discretion

Route Protection APS is defined as the APS facility being in a separate sheath within alternate underground, aerial or direct buried structures that are run along separate physical paths from the facilities associated with the primary Metro Ethernet Connection. No precise distance separation is specified between the paths; although the separation is sufficient to preclude one disruptive event from affecting both routes.

The APS feature is billed based upon the actual total route miles in a customer's specific Structural Protection APS or Route Protection APS design as determined by the Telephone Company. The term "route miles" is defined for this application to be the actual physical distance or length (not airline mileage), rounded up to the next whole mile, of the unique APS facility designed for each individual customer premises. Total route miles are measured between the customer premises and its serving wire center, plus route miles between the serving wire center and any intermittent wire centers in the path designed to reach the BellSouth Metro Ethernet wire center associated with the primary Metro Ethernet Connection (i.e., the wire center where the BellSouth Metro Ethernet switching equipment is located).

The APS rate element provides the alternate data channel transport and APS equipment in the BellSouth Metro Ethernet Service wire center associated with the primary Metro Ethernet Connection. Actual total route mileage for the customer's APS design is determined from a Service Inquiry. The route mileage determined from this Telephone Company Service Inquiry is used for billing purposes and is the sole determinant of such mileage (i.e., not subject to dispute).

V. BellSouth Metro Ethernet Service Independent Company (ICO) Trunk Connection (N)

Provides interconnection between BellSouth's Ethernet network and the Ethernet network of an Independent Telephone Company. A BellSouth Metro Ethernet Service ICO Trunk Connection provides data channel transport for connections that are 10 airline miles or less in distance from the BellSouth Metro Ethernet Service ICO Trunk Connection wire center to the meet-point with the Independent Company. Meet-point locations greater than 10 airline miles from the BellSouth Metro Ethernet Service ICO Trunk Connection wire center also require BellSouth Metro Ethernet Service ICO Trunk Additional Mileage charges. (N)

W. BellSouth Metro Ethernet Service Independent Company (ICO) Trunk Additional Mileage Charges (N)

Additional mileage charges associated with a BellSouth Metro Ethernet Service ICO Trunk Connection apply when the total distance from the BellSouth Metro Ethernet Service ICO Trunk Connection wire center to the meet-point with the Independent Company is greater than 10 miles in length. The additional mileage is measured in airline miles from the BellSouth Metro Ethernet Service wire center associated with the BellSouth Metro Ethernet Service ICO Trunk Connection to the Independent Company meet-point. Fractions of miles will be considered as a whole mile. (N)

Note 1: Automatic Protection Switching (APS) is not available for a 2 Mbps, 4 Mbps or 8 Mbps Basic, Premium or Virtual Connection.

All BellSouth marks contained herein and as set forth in the trademarks and service marks section of the BellSouth Tariffs are owned by BellSouth Intellectual Property Corporation.

E7. SPECIAL ACCESS (A.K.A. BELLSOUTH SPA) SERVICE

E7.3 Channel Interface and Network Channel Codes (T)

E7.3.1 General (T)

A. This subsection explains the Channel Interface codes and Network Channel codes that the customer must specify when ordering Special Access (a.k.a. BellSouth SPA) service. Included is an example which explains the specific characters of the code, a glossary of Channel Interface codes, impedance levels, Network Channel codes and compatible Channel Interfaces. (M)

Example: If the customer specifies a LB Network Channel Code and a 2LC8 Channel Interface at the customer's premises, the following is being requested:

1. LB = Voice Grade Channel with a Predefined Technical Specification Package (1)
2. 2 = Number of physical wires at customer premises
3. LC = Facility interface for Type C Signaling.
4. 8 = Variable impedance level

E7.3.2 Glossary of Channel Interface Codes and Options

Code - Option	Definition
AB -	Accepts 20 Hz ringing signal at customer's point of termination
AC -	Accepts 20 Hz ringing signal at the customer's end user's point of termination
CS -	Digital hierarchy interface at Digital Crossconnect System (DCS)
- EA	E&M Signaling
- GO	Ground Start Loop Signaling - Open End
- GS	Ground Start Loop Signaling - Closed End
- LO	Loop Start Loop Signaling - Open End
- LS	Loop Start Loop Signaling - Closed End
- NO	Transmission Only - No Signaling
- R	(DS0) Customer Reconfiguration Voice Grade Service
- 10R	DS1 to DS0 Customer Reconfigurable
- 10	DS1 to DS0
- 11R	DS1 to DS1 Customer Reconfigurable
- 11	DS1 to DS1
- SP	Resistive Type: Split Path Operation for Data Polling Conference Type
- CF	Resistive Type: Split Path Operation for Symmetrical Voice Conference Type
- BC	CO Bridging: Broadcast for Broadcast Conference Type

E7. SPECIAL ACCESS (A.K.A. BELLSOUTH SPA) SERVICE (T)

E7.3 Channel Interface and Network Channel Codes (Cont'd)

E7.3.2 Glossary of Channel Interface Codes and Options (Cont'd)

Code - Option	Definition
CT -	Centrex Type Services Tie Trunk Termination
DA -	Data stream in VF frequency band at customer's end user's point of termination
DB -	Data stream in VF frequency band at customer's point of termination
- 10	VF for TG1 and TG2
- 43	VF for 43 Telegraph Carrier type signals, TG1 and TG2
DS -	Digital hierarchy interface
- 1K	1.544 Mbps (DS1) ANSI Extended Superframe (ESF) format per TA-TSY-000342
- 1S	1.544 Mbps (DS1) ANSI Extended Superframe (ESF) format and B8ZS Clear Channel Capability per TA-TSY-000342
- 15	1.544 Mbps (DS1) Superframe (SF) format per TA-TSY-000342

E7. SPECIAL ACCESS (A.K.A. BELLSOUTH SPA) SERVICE (T)

E7.3 Channel Interface and Network Channel Codes (Cont'd)

E7.3.2 Glossary of Channel Interface Codes and Options (Cont'd)

Code - Option	Definition
- 15B	1.544 Mbps (DS1) Superframe (SF) format and B8ZS Clear Channel Capability per TA-TSY-000342
- 15E	8-bit PCM encoded in one 64 Kbps of the DS1 signal
- 15F	8-bit PCM encoded in two 64 Kbps of the DS1 signal
- 15G	8-bit PCM encoded in three 64 Kbps of the DS1 signal
- 15H	14/11-bit PCM encoded in six 64 Kbps of the DS1 signal
- 15J	1.544 Mbps format per PUB 41451 (only available to U. S. Govt. agencies)
- 31	3.152 Mbps (DS1C)
- 31L	3.152 Mbps (DS1C) with SF signaling
- 44	44.736 Mbps (DS3)
- 44L	44.736 Mbps (DS3) with SF signaling
- 63	6.312 Mbps (DS2)
- 63L	6.312 Mbps (DS2) with SF signaling
DU	Digital access interface
- 19 (S)[1]	19.2 Kbps
- 24 (S)[1]	2.4 Kbps
- 48 (S)[1]	4.8 Kbps
- 56 (S)[1]	56.0 Kbps
- 64	64.0 Kbps
- 96 (S)[1]	9.6 Kbps
- 1KN	DS1 (1.544 Mbps) ANSI Extended Superframe (ESF) Format per TR-NPL-000054 without line power
- 1SN	DS1 (1.544 Mbps) ANSI Extended Superframe (ESF) Format per TR-NPL-000054, with B8ZS Clear Channel Capability and without line power
- A	DS1 1.544 Mbps free-framing format per PUB 41451 with line power (only available to U. S. Govt. agencies)
- AN	DS1 (1.544 Mbps) free-framing format per PUB 41451 without line power (only available to U. S. Govt. agencies)
- BN	DS1 (1.544 Mbps) Superframe (SF) Format per TR-NPL-000054 without line power

Note 1: (S) is an additional BellSouth designation for use when the optional Secondary Channel feature is required.

E7. SPECIAL ACCESS (A.K.A. BELLSOUTH SPA) SERVICE (T)

E7.3 Channel Interface and Network Channel Codes (Cont'd)

E7.3.2 Glossary of Channel Interface Codes and Options (Cont'd)

Code - Option	Definition
- DN	DS1 (1.544 Mbps) Superframe (SF) Format per TR-NPL-000054, with B8ZS Clear Channel Capability and without line power.
- SN	1.544 Mbps (DS1) "ANSI" Extended Superframe (ESF) format and B8ZS Clear Channel Capability
DV -	Data and Voice Multiplexing
- BC	Digital Data Over Voice, 9.6 Kbps
DX -	Duplex signaling interface at customer's point of termination
DY -	Duplex signaling interface at customer's end user's point of termination.
EA - E	Type I E&M Lead Signaling. Customer at POT or customer's end user at POT originates on E Lead.
EA - M	Type I E&M Lead Signaling. Customer at POT or customer's end user at POT originates on M Lead.

E7. SPECIAL ACCESS (A.K.A. BELLSOUTH SPA) SERVICE (T)

E7.3 Channel Interface and Network Channel Codes (Cont'd)

E7.3.2 Glossary of Channel Interface Codes and Options (Cont'd)

Code - Option	Definition
EB - E	Type II E&M Lead Signaling. Customer at POT or customer's end user at POT originates on E Lead.
EB - M	Type II E&M Lead Signaling, Customer at POT or customer's end user at POT originates on M Lead.
EC -	Type III E&M signaling at customer POT.
EX - A	Tandem channel unit signaling for loop start or ground start and customer supplies open end (dial tone, etc.) functions.
- B	Tandem channel unit signaling for loop start or ground start and customer supplies closed end (dial pulsing, etc.) functions.
GO -	Ground start loop signaling - open end function by customer or customer's end user
G S -	Ground start loop signaling - closed end function by customer or customer's end user
- C	Centrex Type Services foreign exchange termination
- M	For terminating in central office located answering service concentrator
IA -	E.I.A. (25 PIN RS-232)
LA -	End user loop start loop signaling - Type A OPS registered port open end
LB -	End user loop start loop signaling - Type B OPS registered port open end
LC -	End user loop start loop signaling - Type C OPS registered port open end
LO -	Loop start loop signaling - open end function by customer or customer's end user
LR -	20 Hz automatic ringdown interface at customer with Company provided PLAR
LS -	Loop start loop signaling - closed end function by customer or customer's end user
- M	For terminating in central office located answering service concentrator
NO -	No signaling interface, transmission only
PG -	Program transmission - no dc signaling
- 3	Nominal frequency from 200 to 3,500 Hz
- 5	Nominal frequency from 100 to 5,000 Hz

E7. SPECIAL ACCESS (A.K.A. BELLSOUTH SPA) SERVICE

E7.3 Channel Interface and Network Channel Codes (Cont'd)

E7.3.2 Glossary of Channel Interface Codes and Options (Cont'd)

Code - Option	Definition
- 8	Nominal frequency from 50 to 8,000 Hz
PR -	Protective relaying[1]
RV - 0	Reverse battery signaling, one way operation, originate by customer
- T	Reverse battery signaling, one way operation, terminate function by customer or customer's end user
SF -	Single frequency signaling with VF band at either customer POT or customer's end user POT
TF -	Telephotograph interface
TT -	Telegraph/teletypewriter interface at either customer POT or customer's end user POT
- 2	20.0 milliamperes
TT - 3	3.0 milliamperes
- 6	62.5 milliamperes

(DELETED) (D)

E7.3.3 Impedance

The nominal reference impedance with which the channel will be terminated for the purpose of evaluating transmission performance:

Value (ohms)	Code(s)
110	0
150	1
600	2
900	3
135	5
75	6
124	7
Variable	8
100	9

Note 1: Available only for the transmission of audio tone protective relaying signals used in the protection of electric power systems during fault conditions.

E7. SPECIAL ACCESS (A.K.A. BELLSOUTH SPA) SERVICE (T)

E7.3 Channel Interface and Network Channel Codes (Cont'd)

E7.3.4 Digital Hierarchy Channel Interface Codes (4DS)

Customers selecting the channelized four-wire DS1 or higher facility interface option at the customer designated premises will be requested to provide subsequent system and channel assignment data. The various digital bit rates in the digital hierarchy employ the channel interface code 4DS9, 4DS0 or 4DS6 plus the speed options indicated following:

Interface Code and Speed Option	Nominal Bit Rate (Mbps)	Digital Hierarchy Level
4DS9-15	1.544	DS1
4DS9-31	3.152	DS1C
4DS0-63	6.312	DS2
4DS6-44	44.736	DS3

(DELETED)

E7.3.5 Service Designator/Network Channel Code Conversion Table

The purpose of this table is to show the relationship between the service designator codes (e.g. VG1, etc.,) and the network channel codes that are used for various administrative purposes.

Service Designator Code	Network Channel Code
TG1	NW
TG2	NY
VG1	LB
VG2	LC
VG3	LD
VG4	LE
VG5	LF
VG6	LG
VG7	LH
VG8	LJ
VG9	LK
VG10	LN
VG11	LP
VG12	LR

E7. SPECIAL ACCESS (A.K.A. BELLSOUTH SPA) SERVICE

E7.3 Channel Interface and Network Channel Codes (Cont'd)

E7.3.5 Service Designator/Network Channel Code Conversion Table (Cont'd)

Service Designator Code	Network Channel Code
AP1	PE
AP2	PF
AP3	PJ
AP4	PK
TV3	TZ
DA1	XA
DA2	XB
DA3	XG
DA4	XH
DA5	XE
DA6	YN
HC0	HS
HC1	HC
HC1C	HD
HC2	HE
HC3	HF

E7.4 Rate Regulations

This subsection contains the specific regulations governing the rates and charges that apply for Special Access (a.k.a. BellSouth SPA) service.

E7.4.1 Types of Rates and Charges

A. There are two types of rates and charges. These are monthly rates and nonrecurring charges. The rates and charges are described as follows:

1. Monthly Rates

Monthly rates are flat recurring rates that apply each or fraction thereof that a Special Access (a.k.a. BellSouth SPA) service is provided. For billing purposes, each month is considered to have thirty days.

Digital Data Access (a.k.a. BellSouth SPA DS0 Digital Data) service is offered under the contract plans as described in E7.4.14 following. Derived Data Channel (a.k.a. BellSouth SPA Derived Data Channel) service is offered under two contract plans. Contract plan rates are available in payment periods from twenty-four to forty-two months and in payment periods from forty-three to sixty months under conditions specified in the Channel Services Payment Plan in E2.4 of this Tariff. These payment periods are an exception to those listed in E2.4 of this Tariff. Termination Liability Charges will not apply for IC or end user requests for moves of service under CSPP subject to the provisions set forth in E2.4.9.A.8. preceding. A Termination Liability Charge is applicable at the date of termination if the customer terminates or disconnects the service prior to fulfilling the period of the contract plan, except as specified in b. following. The Termination Liability Charge is determined by multiplying the contracted monthly rate times the number of months in the contract plan, less the contracted monthly rate times the number of months the service has been installed***, multiplied by a factor. The factor is fifty percent (50%) for contracts that have been in effect twelve months or less, or twenty percent (20%) for contracts that have been in effect longer than twelve months.*** An example is provided in a. following. (C)

All BellSouth marks contained herein and as set forth in the trademarks and servicemarks section of this Tariff are owned by BellSouth Intellectual Property Corporation.

E7. SPECIAL ACCESS (A.K.A. BELLSOUTH SPA) SERVICE

E7.4 Rate Regulations (Cont'd)

E7.4.1 Types of Rates and Charges (Cont'd)

A. (Cont'd)

1. Monthly Rates (Cont'd)

a. An end user or IC subscribes to Derived Data Channel (a.k.a. BellSouth SPA Derived Data Channel) service using the twenty-four to forty-two month payment plan. The contract plan period is for thirty months. The subscriber terminates the service after twelve months. The total liability charge is thirty months times the monthly rate. The amount is then reduced to reflect the number of months the subscriber has had the service, which in this example is twelve months. Therefore, the Termination Liability Charge is ***fifty percent (50%) of this amount*** calculated as follows: (C)

Termination Liability Charge = ***.50 x [***(30 months x monthly rate) - (12 months x monthly rate)***]*** (C)

b. A Termination Liability Charge will not be applicable at the date of termination if the customer terminates or disconnects the service prior to fulfilling the period of the contract plan for customer requested changes to a higher order of service covered by the Channel Services Payment Plan as specified in E2.4.9.A.4.b., or IC or end user requested changes to services not covered by the Channel Services Payment Plan that are offered by the Company under a contract payment plan provided that the applicable conditions set forth in E2.4.9.A.4.b. are satisfied.

Contract rates are available for 1.544 Mbps High Capacity (a.k.a. BellSouth SPA DS1) service for variable periods, with rates based on lengths of thirty-six months, sixty months, or eighty-four months under conditions specified in the Channel Service Payment Plan in E2.4 of this Tariff. A Termination Liability Charge is applicable at the date of termination. The applicable charge will be equal to the number of months remaining in the contract times the monthly contract rate. However, Termination Liability Charges will not apply for IC or end user requests for moves of service under CSPP subject to the provisions set forth in E2.4.9.A.8. preceding.

All BellSouth marks contained herein and as set forth in the trademarks and servicemarks section of this Tariff are owned by BellSouth Intellectual Property Corporation.

E7. SPECIAL ACCESS (A.K.A. BELLSOUTH SPA) SERVICE

E7.4 Rate Regulations (Cont'd)

E7.4.1 Types of Rates and Charges (Cont'd)

A. (Cont'd)

2. Nonrecurring Charges

Nonrecurring charges are one-time charges that apply for specific work activity (i.e., installation or change to an existing service). The types of nonrecurring charges that apply for Special Access (a.k.a. BellSouth SPA) service are:

- Installation of service,
- Installation of optional features and functions, and
- Service rearrangements

The following list identifies the individual Special Access (a.k.a. BellSouth SPA) services provided under Section E7. of this Tariff which are eligible for credit of nonrecurring charges under "Service Installation Guarantee" found in E2.4.10 ***of this Tariff***. Customers with these services are not eligible for the Service Installation Guarantee when the requested installation, move or rearrangement service order interval is four days or less as measured from the Application Date of the order. (T)

- Voice Grade (a.k.a. BellSouth SPA DS0 VG),
- Wired Music,
- Digital Data Access (a.k.a. BellSouth SPA DS0 Digital Data) service[1] ,
- High Capacity (a.k.a. BellSouth SPA High Capacity) service
- SMARTRing service (a.k.a. BellSouth Dedicated Ring) (T)

Provided, however, that the following services are not eligible for such credit.

- FlexServ service (a.k.a. BellSouth SPA Customer Reconfiguration) (T)
- Derived Data Channel (a.k.a. BellSouth SPA Derived Data Channel) service
- BellSouth Metro Ethernet service (N)

a. Installation of Service

Nonrecurring charges apply to each service installed. When one service is ordered and installed, it is billed at the First Service Installed rate. When more than one of the same type of service, between the same locations, for the same customer is ordered and installed at the same time, one at each location is billed at the First Service Installed rate and the others are billed at the Additional Service Installed rate. Nonrecurring charges are per each rate element for Commercial Quality Video (a.k.a. BellSouth SPA Commercial Quality Video) service.

b. Installation of Optional Features and Functions

Nonrecurring charges apply for the installation of some of the optional features and functions available with Special Access (a.k.a. BellSouth SPA) service. The Initial nonrecurring charge applies if the feature or function is installed coincident with the primary service. The Subsequent nonrecurring charge applies if the feature or function is installed after the installation of the primary service.

First and Additional nonrecurring charges are applicable to activate each individual Central Office Channel Interface of a DS1 or DS0 Basic Channelization System and are in addition to the nonrecurring charges for the DS1 or DS0 Basic Channelization System. A "First" Central Office Channel Interface nonrecurring charge is applicable to the first Central Office Channel Interface installed coincident with the installation of a DS1 or DS0 Basic Channelization System, per service request. The "Additional" nonrecurring charge applies for each additional Central Office Channel Interface, of the same type, ordered and installed at the same location, for the same customer, at the same time, on the same order request. Future requests for a Central Office Channel Interface on an existing DS1 or DS0 Basic Channelization System will be treated as new requests and will require "First" and "Additional" Central Office Channel Interface nonrecurring charge application in addition to any other applicable charges.

One nonrecurring charge is applicable for each individual DS1 level central office or customer channel interface, and is in addition to any other applicable charge(s).

The nonrecurring charges for the installation of optional features and functions are set forth in E7.5 following as nonrecurring charges for optional features and functions associated with the specific services.

Note 1: The Data Over Voice Channel optional feature is not eligible for such credit.

All BellSouth marks contained herein and as set forth in the trademarks and servicemarks section of this Tariff are owned by BellSouth Intellectual Property Corporation.

E7. SPECIAL ACCESS (A.K.A. BELLSOUTH SPA) SERVICE (T)

E7.4 Rate Regulations (Cont'd)

E7.4.1 Types of Rates and Charges (Cont'd)

A. (Cont'd)

3. Service Rearrangements

Service rearrangements are changes to existing (installed) services which do not result in either a change in the minimum period requirements as set forth in E5.2.6 preceding or a change in the physical location of the point of the termination at a customer designated premises. Changes which result in the establishment of new minimum period obligations are treated as disconnects and starts. Changes in the physical location of the point of the termination are treated as moves and are described and charged for as set forth in E7.4.5 following. A change which results from a transfer of service as described and charged as set forth in 4. and E7.5.13 following.

The charge to the customer for the service rearrangement is dependent on whether the change is administrative only in nature or involves actual physical change to the service.

Administrative changes, identified as follows, will be made without charge(s) to the customer. Such changes require the continued provision and billing of the Access Service to the same entity (i.e., customer remains responsible for all outstanding indebtedness for the Access Service). Administrative changes are as follows:

- Change of customer name (i.e., the customer of record does not change but rather the customer of record changes its name -- e.g., AT&T-Long Lines to AT&T-Communications),

E7. SPECIAL ACCESS (A.K.A. BELLSOUTH SPA) SERVICE

E7.4 Rate Regulations (Cont'd)

E7.4.1 Types of Rates and Charges (Cont'd)

A. (Cont'd)

3. Service Rearrangements (Cont'd)

- Change of customer or customer's end user premises address when the change of address is not a result of a physical relocation of equipment,

- Change in billing data (name, address, or contact name or telephone number. The customer of record does not change.)

- Change of customer circuit identification,

- Change of billing account number,

- Change of customer test line number,

- Change of customer or customer's end user contact name or telephone number, and

- Change of jurisdiction.

All other service rearrangements, including physical changes to existing service, will be charged for as follows:

- If the change involves the addition of other customer designated premises to an existing multipoint service, the nonrecurring charge for the Local Channel rate element will apply. The charge(s) will apply only for the location(s) that is being added.

- If the change involves the addition of optional features or functions which have separate nonrecurring charges, the nonrecurring charges for the optional features or functions added will apply.

-If the change involves a customer requested change of data transmission rate for an existing Digital Data Access (a.k.a. BellSouth SPA DS0 Digital Data) Service circuit, the appropriate nonrecurring charge shall be the Speed Change Charge provided in E7.5.5.C.4. following. This charge shall apply per local channel on each circuit where the speed is requested to be changed. The existing circuit will experience out of service time when the speed change work is conducted. (Full nonrecurring charges shall apply for customer requests for changes of data transmission rate where out of service time cannot be tolerated. The customer shall specify the disconnect date for the circuit being replaced.)

- If the change involves changing the type of signaling on a Voice Grade (a.k.a. BellSouth SPA DS0 VG) service, a charge equal to the Voice Grade (a.k.a. BellSouth SPA DS0 VG) Local Channel rate element nonrecurring charge will apply. The charge will apply per service termination affected.

-If the change involves changing (reconfiguring) an existing BellSouth Metro Ethernet service Connection, appropriate charges provided in E7.4.32 following apply.

- If the change involves the addition of a DS3 Network Interface Unit (NIU) to a SMARTRing service (a.k.a. BellSouth SPA Dedicated Ring) or SMARTGate service (a.k.a. BellSouth SPA Managed Shared Ring Network) the rates and charges shown in E13.3.25 of this Tariff shall apply. (N)

- For all other changes, including a change of the customer of record involving no physical changes to the service provided or the addition of optional features without separate nonrecurring charges, a charge equal to a Local Channel rate element nonrecurring charge will apply. Only one such charge will apply per service, per change.

4. Transfer of Service

When a change in billing data (e.g., name, address, contact name, or telephone number) is requested in association with a change in the customer of record, transfer of service charges, as set forth in E7.5.13 following will apply. Charges are applied on a Billing Account Number (BAN) and per circuit basis.

E7.4.2 Surcharge for Special Access (a.k.a. BellSouth SPA) Service

A. General

In addition to the rates and charges described in E7.4.1. preceding, there is a monthly surcharge that applies to Special Access (a.k.a. BellSouth SPA) service. The Special Access (a.k.a. BellSouth SPA) Surcharge compensates the Company for use of the local exchange network when Special Access (a.k.a. BellSouth SPA) service is connected to a PBX or equivalent device which is capable of interconnecting the Special Access (a.k.a. BellSouth SPA) service with local exchange service.

The Company will automatically bill the surcharge on each Special Access (a.k.a. BellSouth SPA) service installed irrespective of whether the interconnection capability exists in the customer's premises equipment or in a Centrex Type Services switch unless written certification is received from the customer certifying exemption status as set forth in B. following.

All BellSouth marks contained herein and as set forth in the trademarks and servicemarks section of this Tariff are owned by BellSouth Intellectual Property Corporation.

E7. SPECIAL ACCESS (A.K.A. BELLSOUTH SPA) SERVICE (T)

E7.4 Rate Regulations (Cont'd)

E7.4.2 Surcharge for Special Access *(a.k.a. BellSouth SPA)* Service (Cont'd) (T)

B. Special Access ***(a.k.a. BellSouth SPA)*** Surcharge Exemptions (T)

The Special Access ***(a.k.a. BellSouth SPA)*** service will be exempted from the surcharge if the customer provides the Company written certification that the Special Access ***(a.k.a. BellSouth SPA)*** service termination is one of the following: (T)

1. An open-end termination in a Company switch on an FX line, including CCSA and CCSA-equivalent ONALs; or
2. an analog Local Channel that is used for radio or television program transmission; or
3. a termination used for TELEX service; or
4. a termination that by the nature of its operating characteristics could not make use of Company common lines, or
5. a termination that interconnects either directly or indirectly to the local exchange network where the usage is subject to Carrier Common Line charges[1] such as, where the Special Access ***(a.k.a. BellSouth SPA)*** service accesses only FGA and no local exchange lines, or Special Access ***(a.k.a. BellSouth SPA)*** service between customer points of termination or Special Access ***(a.k.a. BellSouth SPA)*** service connecting CCSA or CCSA-type equipment (inter-machine trunks); or (T)
6. a termination that the customer certifies to the Company is not connected to a PBX or other device capable of interconnecting the special access facility to a local exchange subscriber line.

C. Exemption Certification (T)

1. Special Access ***(a.k.a. BellSouth SPA)*** services which are terminated as set forth in B. preceding will be exempted from the Special Access ***(a.k.a. BellSouth SPA)*** Surcharge if the customer provides the Company with a written notification certifying exemption. Such notification shall be provided by the customer (1) at the time the Special Access ***(a.k.a. BellSouth SPA)*** service is ordered or installed; (2) at such time as the Special Access ***(a.k.a. BellSouth SPA)*** service is reterminated to a device not capable of interconnecting to the local exchange network, or (3) at such time as the Special Access ***(a.k.a. BellSouth SPA)*** service becomes associated with a ***BellSouth SWA*** that is subject to Carrier Common Line charges. (T)
2. If written certification is not received at the time the Special Access ***(a.k.a. BellSouth SPA)*** service is obtained, the surcharge will be applied. Exempt status will become effective on the certification date indicated by the customer, subject to the regulations in D. following.
3. The exemption certification is to be provided by the customer ordering the service. The certification must be signed by the customer or authorized representative and include the category of exemption, as set forth in B. preceding, for each termination, and the date which the exemption is effective. (T)
4. The customer shall also notify the Company when the exempted Special Access ***(a.k.a. BellSouth SPA)*** service is changed or reterminated such that the exemption is no longer applicable.

D. Crediting the Surcharge (T)

The Company will cease billing the Special Access ***(a.k.a. BellSouth SPA)*** Surcharge when certification that the Special Access ***(a.k.a. BellSouth SPA)*** service has become exempt from the surcharge, as set forth in B. preceding is received. If the status of the Special Access ***(a.k.a. BellSouth SPA)*** service was changed prior to receipt for the exemption certification, the Company will credit the customer's account, not to exceed ninety (90) days, based on the effective date of the change specified by the customer in the letter of certification.

E. Application of Rates (T)

1. The monthly Special Access ***(a.k.a. BellSouth SPA)*** Surcharge applies to Special Access ***(a.k.a. BellSouth SPA)*** services arranged, as set forth in A. preceding, on a per voice equivalent basis as shown in the following example.

Note 1: Available only for the transmission of audio tone protective relaying signals used in the protection of electric power systems during fault conditions.

E7. SPECIAL ACCESS (A.K.A. BELLSOUTH SPA) SERVICE

E7.4 Rate Regulations (Cont'd)

E7.4.2 Surcharge For Special Access (a.k.a. BellSouth SPA) Service (Cont'd)

E. Application of Rates (Cont'd)

1. (Cont'd)

Special Access Service (a.k.a. BellSouth SPA)	Voice Grade Equivalent		Surcharge	Monthly Charge
Voice Grade (a.k.a. BellSouth SPA DSO VG)	1	X	$ 25.00	$ 25.00
DS1 (a.k.a. BellSouth SPA DS1)	24	X	25.00	600.00

2. In the case of multipoint Special Access (a.k.a. BellSouth SPA) service, one Special Access (a.k.a. BellSouth SPA) Surcharge will apply for each termination at a customer designated premises except that the surcharge applies at the customer designated premises at which the Access Service is connected to intrastate service.
3. The Company will bill the surcharge to the customer who orders the Special Access (a.k.a. BellSouth SPA) service unless the Service is exempt as set forth in B. preceding.

   The rate for the Special Access (a.k.a. BellSouth SPA) Surcharge is set forth in E7.5.10 following.

E7.4.3 Message Station Equipment Recovery Charge

The Message Station Equipment Recovery Charge is a charge to recover that portion of message station equipment that is assigned to Special Access (a.k.a. BellSouth SPA) service.

This charge is assessed only to those customers to which the Special Access (a.k.a. BellSouth SPA) Surcharge applies. The rate for the Message Station Equipment Recovery Charge is set forth in E7.5.9 ***following***. (T)

E7.4.4 Minimum Periods

Except under conditions specified in E2.4.9 ***of this Tariff*** or E7.7 and following, the minimum service period for all services is one month. (T)

The minimum service period for High Capacity (a.k.a. BellSouth SPA High Capacity) ICB services is specified in the Individual Case Basis Filing.

The minimum service period for SMARTRing service (a.k.a. BellSouth Dedicated Ring) ***and BellSouth Metro Ethernet service*** is four (4) months. (C)

E7.4.5 Moves

A. A move involves a change in the physical location of one of the following:

1. The point of termination at the customer's premises
2. The customer's premises

B. The charges for the move are dependent on whether the move is to a new location within the same building or to a different building.

1. Moves Within the Same Building

   When the move is to a new location within the same building the charge for the move will be an amount equal to one-half of the nonrecurring (i.e., installation) charge for the service termination affected. There will be no change in the minimum period requirement.

2. Moves To a Different Building

   Moves to a different building, other than addressed in 3. following, will be treated as a discontinuance and start of service and all associated nonrecurring charges will apply. New minimum period requirements will be established for the new services. The customer will also remain responsible for satisfying all outstanding minimum period charges for the discontinued service.

3. Moves of Service(s) under CSPP

   Customer requests for moves of service under CSPP, other than inside moves, will be subject to the conditions stated in E2.4.9.A.8. ***of this Tariff***. (T)

All BellSouth marks contained herein and as set forth in the trademarks and servicemarks section of this Tariff are owned by BellSouth Intellectual Property Corporation.

E7. SPECIAL ACCESS (A.K.A. BELLSOUTH SPA) SERVICE

E7.4 Rate Regulations (Cont'd)

E7.4.6 Mileage Measurement

A. The mileage to be used to determine the monthly rate for the Interoffice Channel is calculated on the airline distance between the locations involved i.e., the serving wire centers associated with two customer designated premises, a serving wire center associated with a customer designated premises and a Company hub, a serving wire center associated with a customer designated premises and a WATS serving office, or two Company hubs. The serving wire center associated with a customer designated premises is the serving wire center from which the customer designated premises would normally obtain dial tone.

B. Mileage is shown in E7.5.2. following in terms of mileage bands. To determine the rate to be billed, first compute the mileage using the V and H coordinates method, as set forth in the National Exchange Carrier Association Tariff F.C.C. No. 4, then find the band into which the computed mileage falls and apply the rates shown for that band. When the calculation results in a fraction of a mile, always round up to the next whole mile before determining the mileage band and applying the rates.

C. When Hubs are involved, mileage rates are computed and rates applied separately for each section of the Interoffice Channel, i.e., customer designated premises serving wire center to Hub, Hub to Hub and/or Hub to customer designated premises serving wire center. However, when any service is routed through a hub for purposes other than customer specified bridging or channelization (e.g., the Company chooses to so route for test access purposes), rates will be applied only to the distance calculated between the serving wire centers associated with the customer designated premises. For the purpose of applying multipoint charges, the bridging or hubbing locations are determined by that combination of airline distances connecting the serving wire center which will produce the lowest interoffice mileage charges.

D. SMARTRing® service (a.k.a. BellSouth Dedicated Ring) Local Channel, Alternate Central Office Channel and Internodal Channel rates are also distance sensitive. They are measured per quarter airline mile or fraction thereof from the customer's designated premises to the Serving Wire Center, Alternate Central Office, or other Customer Nodes. V&H coordinates are derived for each customer location through the use of longitude and latitude measurements. Using the V&H coordinate method as set forth in the NATIONAL EXCHANGE CARRIER ASSOCIATION, INC. TARIFF FCC. No. 4, compute the mileage, convert to quarter miles, and multiply the appropriate per quarter mile rate by the distance involved. Any portion of a quarter mile will always round up to the next quarter mile before determining the mileage and applying the rate. (N)

E. The SMARTRing® service (a.k.a. BellSouth Dedicated Ring) Interoffice Channel mileage is calculated per quarter airline mile between two directly connected central office's on the ring. Interoffice Channel mileage is computed by using the V&H coordinates method as set forth in the NATIONAL EXCHANGE CARRIER ASSOCIATION, INC. TARIFF FCC. No. 4. To determine the rate to be billed, multiply the appropriate per quarter mile rate by the distance involved. Fractions of a quarter mile always round up to the next quarter mile before determining the mileage and applying the rate. (N)

E7.4.7 Facility Hubs

A customer has the option of ordering Voice Grade (a.k.a. BellSouth SPA DS0 VG) facilities or digital high capacity facilities (i.e., DS1, DS1C, DS2, or DS3) to a facility Hub for channelizing to individual services requiring lower capacity facilities (e.g., Telegraph (a.k.a. BellSouth SPA Telegraph), Voice (a.k.a. BellSouth SPA DS0 VG), Wired Music, etc.).

Different locations may be designated as Hubs for different facility capacities, e.g., channelization from digital to digital may occur at one location while channelization from digital to analog may occur at a different location. When ordering, the customer will specify the desired channelization Hub(s) selected from the National Exchange Carrier Association Tariff F.C.C. No. 4. This tariff identifies the type(s) of channelization functions which are available and the serving wire centers at which they are available.

Some of the types of channelization available include the following:

- from higher to lower bit rate

- from digital to voice frequency channels

End to end services may be provided on channels of these facilities to a hub. The transmission performance for the end to end sevice provided between customer designated premises will be that of the lower capacity or bit rate. For example, when a 1.544 Mbps facility is channelized to voice frequency channels, the transmission performance of the channelized services will be Voice Grade (a.k.a. BellSouth SPA DS0 VG), not High Capacity (a.k.a. BellSouth SPA High Capacity).

(M)

Material previously appearing on this page now appears on page(s) 33 of this section.

E7. SPECIAL ACCESS (A.K.A. BELLSOUTH SPA) SERVICE

E7.4 Rate Regulations (Cont'd)

E7.4.7 Facility Hubs (Cont'd)

The Company will commence billing the monthly rate for the facility to the Hub on the date specified by the customer on the service order. Individual services utilizing these facilities may be installed coincident with the installation of the facility to the Hub or may be ordered and/or installed at a later date, at the option of the customer. The customer will be billed for a Voice Grade (a.k.a. BellSouth SPA DS0 VG) or digital Local Channel, Interoffice Channel, if applicable and the Basic Channelization System at the time the facility is installed. DS1 and DS0 Basic Channelization Systems require a Central Office Channel Interface for activation of each lesser capacity channel. DS3 to DS1 channelization arrangements, for transport of intrastate DS1 service high capacity channels via LightGate (a.k.a. BellSouth SPA Point to Point Network) and SMARTRing services (a.k.a. BellSouth SPA Dedicated Ring), require a DS1 channel interface for activation of each DS1 channel. Individual service rates (by service type) will apply for a Local Channel, additional Interoffice Channel and Central Office Channel Interface(s) (as required), if applicable, for each channelized service. These will be billed to the customer as each individual service is installed. (T)

Cascading channelization occurs when a high capacity analog or digital channel is channelized to provide channels with a lesser capacity and one of the lesser capacity channels is further channelized.

When cascading channelization is performed, whether in the same or a different Hub, a charge for the additional Basic Channelization System and Central Office Channel Interface(s) also applies. A DS1 Basic Channelization System and DDAS (a.k.a. BellSouth SPA DS0 Digital Data) Central Office Channel Interface are required for high speed or low speed DDAS (a.k.a. BellSouth SPA DS0 Digital Data) activations when channelized from a DS1 (1.544 Mbps) channel. A DS0 Basic Channelization System and Subrate Central Office Channel Interface are required for subrate activations of 2.4, 4.8 and 9.6 Kbps when channelized from a DS0 (64 Kbps) channel. When cascading channelization is performed at different Hubbing locations, Interoffice Channel charges also apply between the Hubs.

Although not requiring channelization, the Company will designate certain hubs for Wired Music services. A customer can order service(s) between customer designated premises and a hub and will be billed accordingly at the rates set forth in E7.5.4 and E7.5.5 following for the service, as appropriate. The customer will be charged for each such connection made at the rates for Other Labor as set forth in E13.2.5 following. The rates that apply for the service between each customer designated premises and the hub are a Local Channel and Interoffice Channel, if applicable. In addition, for Wired Music services, rates for optional features and functions may be applicable.

E7.4.8 Shared Use Analog and Digital High Capacity (a.k.a. BellSouth SPA High Capacity) Services

Shared use occurs when Special Access (a.k.a. BellSouth SPA) service and BellSouth SWA are provided over the same High Capacity (a.k.a. BellSouth SPA High Capacity) facility through a common interface. When the IC orders Special Access (a.k.a. BellSouth SPA) service, the facility will be ordered and rated as Special Access (a.k.a. BellSouth SPA) service (i.e., Local Channel or Virtual Collocation Cross-Connect, Interoffice Channel, as appropriate, and Basic Channelization System, and Central Office Channel Interface(s), if applicable) until such time as the IC chooses to use a portion of the available capacity for providing BellSouth SWA. As each individual channel is activated for BellSouth SWA, the Special Access (a.k.a. BellSouth SPA) Local Channel rates, Interoffice Channel rates, and Basic Channelization System rates, if applicable, will be reduced accordingly (e.g., 1/24th for a DS1 service, etc.). The IC must place an order for each individual BellSouth SWA channel utilizing the Shared Use Facilities and specify the channel assignment for each such service. BellSouth SWA rates and charges as set forth in E6.8. preceding will apply for each channel of the shared use facility that is used to provide BellSouth SWA. Where Special Access (a.k.a. BellSouth SPA) service is provided utilizing a channel of the shared use facility to the hub, High Capacity (a.k.a. BellSouth SPA High Capacity) rates and charges will apply for the facility to the hub as set forth preceding and individual service rates and charges will apply from the hub to the IC designated premises. The rates and charges that will apply to the portion from the hub to the IC designated premises will be dependent on the specific type of Special Access (a.k.a. BellSouth SPA) service that is provided (e.g., Voice Grade (a.k.a. BellSouth SPA DS0 VG), Telegraph (a.k.a. BellSouth SPA Telegraph), etc.). The applicable rates and charges will include a Local Channel and Interoffice Channel, and appropriate channelization elements, if applicable.

Virtual Collocation Cross-Connects provide a means for customers to interconnect their BellSouth Shared Use and Digital High Capacity (a.k.a. BellSouth SPA High Capacity) services to ***C***entral ***O***ffice ***C***ollocation arrangements ***within the same Central Office***. ***Terms, conditions, and*** rates ***for Physical Access Collocation Cross-Connects and*** Virtual ***Access*** Collocation Cross-Connects are ***set forth*** in ***Section E13. of this Tariff***. (C)

All BellSouth marks contained herein and as set forth in the trademarks and servicemarks section of this Tariff are owned by BellSouth Intellectual Property Corporation.

E7. SPECIAL ACCESS (A.K.A. BELLSOUTH SPA) SERVICE

E7.4 Rate Regulations (Cont'd)

E7.4.8 Shared Use Analog and Digital High Capacity (a.k.a. BellSouth SPA High Capacity) Services (Cont'd)

The capability exists for a customer to utilize all or part of a SMARTRing® service (a.k.a. BellSouth Dedicated Ring) to transport switched access provided the SMARTRing® service (a.k.a. BellSouth Dedicated Ring) channel interface transporting the BellSouth SWA service does not have FlexServ® service (a.k.a. BellSouth SPA Customer Reconfiguration) capability. The customer must place an order for each individual BellSouth SWA Channel provided over Dedicated Access service Shared Use Facilities and specify the channel assignment for each such service. The switched traffic would enter and exit the SMARTRing® service (a.k.a. BellSouth Dedicated Ring) at Customer and Central Office Nodes on that network. When this occurs, ratcheting of Dedicated Access rate elements (i.e. Nodes, Channel Interfaces, Local Channels, Alternate Central Office Channels, Internodal Channels, or Interoffice Channels) will be based on the number of voice grade (a.k.a. BellSouth SPA DS0 VG) equivalent trunks/lines of that rate element used for BellSouth SWA access. (M)

Reduction factors will be developed to reduce the charges on system level billing as well as the billing on individual DS1, DS3, STS-1, OC-3, and/or OC-12 Channel Interfaces. For ratcheting purposes, the system level charges include Customer Nodes, Central Office Nodes, Local Channels, Alternate Central Office Channels, Internodal Channels, and Interoffice Channels as appropriate to make up a customer's SMARTRing® service (a.k.a. BellSouth Dedicated Ring). Individual OC-1, OC-3 and OC-12 Channel Interfaces used in Overlay Ring Arrangements will be ratcheted as system level charges. The system reduction factor will apply to the system level charges.

The system reduction factor will be derived by dividing the number of activated BellSouth SWA access circuits by the voice grade (a.k.a. BellSouth SPA DS0 VG) channel equivalent capacity of the self-healing ring. An OC-1 SMARTRing® service (a.k.a. BellSouth Dedicated Ring) has 672 voice grade (a.k.a. BellSouth SPA DS0 VG) equivalent channels. An OC-3 SMARTRing® service (a.k.a. BellSouth Dedicated Ring) has 2,016 voice grade (a.k.a. BellSouth SPA DS0 VG) equivalent channels. An OC-3+ or OC-12 SMARTRing® service (a.k.a. BellSouth Dedicated Ring) has 8,064 voice grade equivalent channels. An OC-48 SMARTRing® service (a.k.a. BellSouth Dedicated Ring) or OC-48+ SMARTRing® service (a.k.a. BellSouth Dedicated Ring) with 48 or less activated DS3s has 32,256 voice grade (a.k.a. BellSouth SPA DS0 VG) equivalent channels. However, when an OC-48+ SMARTRing® service (a.k.a. BellSouth Dedicated Ring) is used to transport BellSouth SWA service, and more than 48 equivalent DS3s are activated on the service, the factor will be based upon the actual number of activated DS3s times 672 DS0s. A factor for individual DS3 channel interfaces and 28 DS1 channel systems, will be derived by dividing the number of activated BellSouth SWA access circuits associated with the DS3 channel by the voice grade (a.k.a. BellSouth SPA DS0 VG) equivalent capacity of the DS3 channel. A DS3 has 672 voice grade (a.k.a. BellSouth SPA DS0 VG) equivalent channels. For DS1 channel interfaces, a factor is derived by dividing the number of BellSouth SWA access circuits associated with the DS1 channel by the voice grade (a.k.a. BellSouth SPA DS0 VG) equivalent capacity of the DS1 channel, which is 24. Each reduction factor is rounded to four decimal places and then multiplied against the respective monthly charges to determine the reduction amount.

BellSouth SWA rates and charges as set forth in E6.8 preceding will apply for each channel of the shared use facility that is used to provide BellSouth SWA.

E7.4.9 Multijurisdictional WATS Access Line (a.k.a. BellSouth SPA WATS Line) "1+" and "0" IntraLATA Usage

"1+" and "0" intraLATA usage carried over outward WATS Access Lines (a.k.a. BellSouth SPA WATS Line) from this Tariff, having both intra and interstate capability (multijurisdictional) and provided from the BellSouth Telecommunications, Inc. Tariff FCC No. 1 or other appropriate Local Exchange Carrier (LEC) interstate tariff, will be completed over LEC facilities at LEC intraLATA outward WATS rates and subject to rules and regulations applicable to LEC intraLATA outward WATS. Subscribers using a multijurisdictional access line for BellSouth SWA 8XX Toll Free Dialing Ten Digit Screening Service may choose either the Company or the interexchange carrier to complete and bill intraLATA calls according to the appropriate rates, rules and regulations. The "1+" and "0" intraLATA usage will be billed to the customer (end user or IC) where the closed end of the Multijurisdictional WATS Access Line (a.k.a. BellSouth SPA WATS Line) is terminated. Customer billing information must be provided to the Company at the time the Multijurisdictional WATS Access Line (a.k.a. BellSouth SPA WATS Line) is ordered when the Company is used to complete intraLATA calls.

E7.4.10 Reserved for Future Use

E7.4.11 Reserved for Future Use

® Registered Service Mark of BellSouth Intellectual Property Corporation

E7. SPECIAL ACCESS (A.K.A. BELLSOUTH SPA) SERVICE

E7.4 Rate Regulations (Cont'd)

E7.4.12 FlexServ® Service (a.k.a. BellSouth SPA Customer Reconfiguration)

A. General

FlexServ® service (a.k.a. BellSouth SPA Customer Reconfiguration) is an optional feature that enables the customer to monitor and reconfigure his Voice Grade (a.k.a. BellSouth SPA DS0 VG), DDAS (a.k.a. BellSouth SPA DS0 Digital Data), and High Capacity special access (a.k.a. BellSouth SPA High Capacity) services without the direct intervention of Company personnel.

1. Basic FlexServ® service (a.k.a. BellSouth SPA Customer Reconfiguration)

Basic FlexServ® service (a.k.a. BellSouth SPA Customer Reconfiguration) includes monitoring and reconfiguration of the customer's private line services equipped with FlexServ® service (a.k.a. BellSouth SPA Customer Reconfiguration).

Monitoring consists of unsolicited signals of major and minor facility alarms. These alarms include carrier group alarms, out of service alarms, bit error rate, bipolar violations, slip errors, errored seconds, out-of-frame alarms and invalid connections. Invalid connections are connections between special access services with incompatible signals or between services without FlexServ® service (a.k.a. BellSouth SPA Customer Reconfiguration). Customer requests for such connections will be denied. The Company shall not be responsible for service interruptions, troubles, loss of customer data, or any other losses resulting from attempted invalid connections.

Reconfiguration provides the customer with the ability to direct the Company to connect or disconnect circuits equipped with FlexServ® service (a.k.a. BellSouth SPA Customer Reconfiguration) options to or from each others of like kind at a central office or central offices where the customer has purchased FlexServ® service (a.k.a. BellSouth SPA Customer Reconfiguration). Such connections and disconnections may be performed immediately or at a future time prescribed by the customer and are performed without direct interaction by Company personnel.

The customer is responsible for providing the terminal equipment required for access to FlexServ® service (a.k.a. BellSouth SPA Customer Reconfiguration).

The customer may transmit reconfiguration directions to or receive monitoring information from the Company over a switched service or a private line service. There are several types of access to the service listed in the General Subscriber Service Tariff from which the customer may choose. The type of access chosen will indicate the type of service the customer must provide to a Company location. Each FlexServ® service (a.k.a. BellSouth SPA Customer Reconfiguration) customer must purchase at least one type of access.

Outside of the Company exchange or region, the customer must provide service from his terminal location to the designated Company location from which he may receive monitoring information or transmit reconfiguration directions.

With the customer's initial order for basic FlexServ® service (a.k.a. BellSouth SPA Customer Reconfiguration), the Company provides the capability for "User Access" for monitoring and reconfiguration signals. One customer identification code with password security is included with such access.

With the customer's initial order, the Company provides one customer training class for up to ***five (5)*** persons. The class length of this initial training is ***two*** consecutive eight hour days. These training classes are conducted at a designated Company location. Transportation, lodging and food for the attendees will be the responsibility of the customer. ***If the customer desires for the initial training to be conducted on his premises, then the customer is responsible for the transportation, lodging and food for the trainer. In addition, the customer is responsible for having the appropriate equipment on his premises.*** (C)

Reconfiguration and monitoring are not available during the performance of routine maintenance of the Company's facilities and equipment used to provide FlexServ® service (a.k.a. BellSouth SPA Customer Reconfiguration).

The Local and Interoffice Channels which are terminated into FlexServ® service (a.k.a. BellSouth SPA Customer Reconfiguration) are subject to all regulations and charges contained in their respective sections of this Tariff in addition to those contained herein.

Different switching options may be available in the same central office. If customers desire more than one switching option in the same central office and facilities are available, a channel connection is required for each FlexServ® service (a.k.a. BellSouth SPA Customer Reconfiguration) switching option connected.

®Registered Service Mark of BellSouth Intellectual Property Corporation

E7. SPECIAL ACCESS (A.K.A. BELLSOUTH SPA) SERVICE

E7.4 Rate Regulations (Cont'd)

E7.4.12 FlexServ Service (a.k.a. BellSouth SPA Customer Reconfiguration) (Cont'd) (T)

A. General (Cont'd)

1. Basic FlexServ service (a.k.a. BellSouth SPA Customer Reconfiguration) (Cont'd) (T)

   FlexServ service (a.k.a. BellSouth SPA Customer Reconfiguration) is furnished only in serving wire centers where facilities are available. (T)

2. Customer Circuits

   There are ***three*** types of channel connections, which can be connected to FlexServ service (a.k.a. BellSouth SPA Customer Reconfiguration) - DS0 (single channel), DS1 (1.544 Mbps) ***and DS3 (44.736 Mbps) digital circuits.*** (C)

   DS0 Channel Connections - There are two types of DS0 channel connections - Voice Grade and Digital. Both types of DS0 connections will be switched at a DS0 level.

   DS1 Channel Connections - There are two types of connections available for a customer desiring to terminate a DS1 circuit - DS0 switching and DS1 switching. For example, if a customer needs to be able to monitor or reconfigure the 24 DS0 circuits riding on the DS1 channel, then the customer would purchase a DS1 channel connection with DS0 switching. If the customer does not need access to the individual DS0 circuits, then the customer would purchase a DS1 channel connection with DS1 switching. ***A monitoring only option (i.e., surveillance) is also provided for DS1 channel connections. This option may also be used for terminating SWA DS1 channels.*** (C)

   DS3 Channel Connections (Monitoring Only) – There are two types of connections available for terminating a DS3 circuit – DS1 and DS3. This option provides for termination of SWA and SPA DS3 channels for monitoring purposes only (i.e., surveillance). If the customer needs monitoring for 28 DS1 circuits, then the customer would purchase a DS3 channel connection at DS1 level. The customer would purchase a DS3 channel connection at DS3 level if the customer wants to monitor the entire DS3 circuit. (N)

3. FlexServ service (a.k.a. BellSouth SPA Customer Reconfiguration) Options **(T)**

   a. Additional Concurrent User Access: This option provides the customer the ability to establish additional concurrent connections to the Company for the communication of monitoring and reconfiguration signals. One additional customer identification code is provided with each additional User Access. For each additional Concurrent User Access ordered, the customer must also order an additional Management Terminal Interface from the General Subscriber Service Tariff.

   b. Additional User Identification Codes: This option provides customer identification codes in addition to that provided with each User Access. If the customer has a Dial Access to FlexServ service (a.k.a. BellSouth SPA Customer Reconfiguration), then the customer must also order an additional Security Card from the General Subscriber Service Tariff. (T)

All BellSouth marks contained herein and as set forth in the trademarks and servicemarks section of this Tariff are owned by BellSouth Intellectual Property Corporation.

E7. SPECIAL ACCESS (A.K.A. BELLSOUTH SPA) SERVICE (T)

E7.4 Rate Regulations (Cont'd)

E7.4.12 FlexServ® Service *(a.k.a. BellSouth SPA Customer Reconfiguration)* (Cont'd) (T)

A. General (Cont'd)

3. FlexServ® service ***(a.k.a. BellSouth SPA Customer Reconfiguration)*** Options (Cont'd) (T)

   c. Additional Customer Training: This option provides one eight hour day of customer training in addition to that included with basic FlexServ® service ***(a.k.a. BellSouth SPA Customer Reconfiguration).*** These training classes are conducted at a designated Company location. All other terms that apply for the initial training apply for the subsequent training. (T)

   d. Multipoint Bridging: Multipoint Bridging is a capability which permits the cross connection of multiple channels equipped with FlexServ® service ***(a.k.a. BellSouth SPA Customer Reconfiguration).*** (T)

      (1) Multipoint Bridging, sometimes referred to as "DMB", is an option on voice grade service that allows the customer the capability to perform reconfigurations that cross-connect or bridge three or more channels in the FlexServ® service ***(a.k.a. BellSouth SPA Customer Reconfiguration)*** arrangement into one conferencing arrangement. (T)

      (2) Multipoint Junction Unit option gives the customer the ability to bridge one master and four patron legs for use with Digital Data Access ***(a.k.a. BellSouth SPA DS0 Digital Data)*** service. If more than one MJU is required, one of the four patron legs must be used to connect to the master leg of another MJU. The customer is responsible for this connection. The MJU feature is only offered in a unit of five channel connections (one master and 4 legs). (T)

   e. Subrate Reconfiguration Capability is an option that provides the customer the ability to control all ports of a subrate multiplexer within a FlexServ® service ***(a.k.a. BellSouth SPA Customer Reconfiguration)*** arrangement. This control includes both the DS0B channel and DS0A legs. The speeds for subrates are 2.4, 4.8, and 9.6 Kbps (does not include 19.2 Kbps). The customer has the responsibility to establish a subrate system using previously acquired DS0 ports. (T)

   f. Reconfigurations by Company Personnel: The customer may request that Company personnel intervene to perform reconfigurations that the customer could otherwise perform without the direct intervention of Company personnel.

4. Shared FlexServ® service ***(a.k.a. BellSouth SPA Customer Reconfiguration)*** Arrangement (T)

   Multiple customers may include circuits with the FlexServ® service option in the same FlexServ® service ***(a.k.a. BellSouth SPA Customer Reconfiguration)*** arrangement, provided all customers designate in writing the same party to serve as their agent. (A FlexServ® service ***(a.k.a. BellSouth SPA Customer Reconfiguration)*** arrangement consists of all special access ***(a.k.a. BellSouth SPA)*** services with FlexServ® service ***(a.k.a. BellSouth SPA Customer Reconfiguration)*** that can be monitored and reconfigured through the same User Access.) (T)

   The agent will be authorized to represent each of those customers in all transactions and communications with the Company regarding the shared FlexServ® service ***(a.k.a. BellSouth SPA Customer Reconfiguration)*** arrangement or circuits included in that arrangement including reconfigurations, monitoring, ordering of additional special access services and FlexServ® service ***(a.k.a. BellSouth SPA Customer Reconfiguration)*** options in the arrangement, and removal of special access services from the arrangement. The Company will not process any customer orders or requests affecting that arrangement of circuits included in that arrangement except those submitted to the Company by the agent. (T)

   The Company will not be liable for any loss to any of the customers in a shared FlexServ® service ***(a.k.a. BellSouth SPA Customer Reconfiguration)*** arrangement caused directly or indirectly by actions of the agent or another customer in the shared arrangement. Each customer in the shared arrangement and the agent indemnify the Company for the costs of any and all claims arising directly or indirectly out of the actions of agent or another customer in the shared arrangement, including, but not limited to, the cost of defending against such claims. (T)

®Registered Service Mark of BellSouth Corporation

E7. SPECIAL ACCESS (A.K.A. BELLSOUTH SPA) SERVICE

E7.4 Rate Regulations (Cont'd)

E7.4.12 FlexServ Service (a.k.a. BellSouth SPA Customer Reconfiguration) (Cont'd)

A. General (Cont'd)

4. Shared FlexServ service (a.k.a. BellSouth SPA Customer Reconfiguration) Arrangement (Cont'd)

   Any customer in a shared FlexServ service (a.k.a. BellSouth SPA Customer Reconfiguration) arrangement must give the Company 30 days prior written notice of his intent to revoke an agent's authority or to remove his special access services from a shared arrangement. Such notice shall not be effective unless it provides the Company with specific and sufficient directions regarding treatment of the customer's special access services upon revocation of the agent's authority or removal from the shared arrangement.

5. ***Access*** Collocation Cross-Connects (C)

   Access Collocation Cross-Connects provides a means for customers to interconnect their FlexServ service (a.k.a. BellSouth SPA Customer Reconfiguration) ***Central Office C***ollocation arrangements ***within the same Central Office***. ***Terms, conditions, and*** rates ***for Physical Access Collocation Cross-Connects and*** Virtual ***Access*** Collocation Cross-Connects are ***set forth*** in ***Section E13. of this Tariff***. (C)

B. Application of Rates

1. Basic FlexServ service (a.k.a. BellSouth SPA Customer Reconfiguration)

   a. Connection of Special Access (a.k.a. BellSouth SPA) service to Reconfiguration and Alarm Monitoring Capability.

      A DS0/DS1/DS3 nonrecurring Connection Charge and a recurring monthly rate is required for each entrance and exit of a special access channel to reconfiguration and monitoring capability.

      Charges for Access to FlexServ service (a.k.a. BellSouth SPA Customer Reconfiguration) are contained in E7.5.16.

2. FlexServ service (a.k.a. BellSouth SPA Customer Reconfiguration) Options

   a. Additional Concurrent User Access

      For each Additional Concurrent User Access a nonrecurring charge and a recurring monthly rate applies.

   b. Additional User Identification Codes

      A nonrecurring charge applies for each additional ID requested.

   c. Additional Customer Training

      Any additional training will incur a nonrecurring charge for each eight (8) hour day of training.

   d. Multipoint Bridging

      Multipoint Bridging (DMB)
      There will be a nonrecurring charge and a monthly rate for each DS0 or equivalent that is equipped with this capability.

      Multipoint Junction Unit
      A nonrecurring charge and a monthly rate applies for each DS0 or equivalent that is equipped with this capability. This option must be purchased in groups of 5 because a unit has the capacity of 5 DS0 or equivalent channel connections.

   e. Subrate Reconfiguration

      There will be a nonrecurring charge for each DS0 equipped DS0B and a nonrecurring charge and a monthly rate will apply for each set of DS0As. The DS0A rates apply in sets of five for 9.6 Kbps, in sets of ten for 4.8 Kbps, and in sets of twenty for 2.4 Kbps.

All BellSouth marks contained herein and as set forth in the trademarks and servicemarks section of this Tariff are owned by BellSouth Intellectual Property Corporation.

E7. SPECIAL ACCESS (A.K.A. BELLSOUTH SPA) SERVICE (T)

E7.4 Rate Regulations (Cont'd)

E7.4.12 FlexServ® Service *(a.k.a. BellSouth SPA Customer Reconfiguration)* (Cont'd) (T)

B. Application of Rates (Cont'd)

2. FlexServ® service ***(a.k.a. BellSouth SPA Customer Reconfiguration)*** Options (Cont'd) (T)

f. Reconfigurations by the Company Personnel

A nonrecurring charge is applicable on each occasion, when the customer requests Company personnel to perform a reconfiguration or a series of reconfigurations in order to set up point-to-point or multipoint connections, to provide a status report or to establish a conference.

E7.4.13 Derived Data Channel *(a.k.a. BellSouth SPA Derived Data Channel)* Service (DDCS) (T)

A. Application of Rates

The derived data channel ***(a.k.a. BellSouth SPA Derived Data Channel)*** charges provide the central office data/voice multiplexing capability. The customer must also subscribe to a compatible two-wire local exchange line (e.g., business exchange line, ESSX® service main station line). This two-wire exchange line and its associated rates and charges are in addition to the derived data channel rates and charges. (T)

The DS0-B interface charge is applicable for each group of a maximum of twenty multiplexed derived data channels. Each of the twenty channels in a DS0-B interface channel group operates at a bit rate of 2.4 Kbps. The interoffice channel is required when the customer's serving wire center and the serving wire center of the customer's terminating premises are not the same. (T)

E7.4.14 Digital Data Access *(a.k.a. BellSouth SPA DS0 Digital Data)* Service (DDAS)

A. General (T)

Digital Data Access ***(a.k.a. BellSouth SPA DS0 Digital Data)*** service is available on a month-to-month basis or under either of two optional contract plans.

B. Application of Rates (T)

1. Digital Data Access ***(a.k.a. BellSouth SPA DS0 Digital Data)*** service is offered under two contract plans. Contract plan rates are available in payment periods from twenty-four to forty-two months and in payment periods from forty-three to sixty months under conditions specified in the Channel Services Payment Plan in E2.4 of this Tariff. These payment periods are an exception to those listed in E2.4 of this Tariff.

A Termination Liability Charge is applicable at the date of termination if the IC or end user terminates or disconnects the service prior to fulfilling the period of the contract plan, except as follows.

a. A Termination Liability Charge will not be applicable at the date of termination if the IC or end user terminates or disconnects the service prior to fulfilling the period of the contract plan for IC or end user requested changes to a higher order of service covered by the Channel Services Payment Plan as specified in E2.4.9.B.4.b, or IC or end user requested changes to services not covered by the Channel Services Payment Plan that are offered by the Company under a contract payment plan provided that applicable conditions set forth in E2.4.9.B.4.b. are satisfied.

®Registered Service Mark of BellSouth Corporation

E7. SPECIAL ACCESS (A.K.A. BELLSOUTH SPA) SERVICE

E7.4 Rate Regulations (Cont'd)

E7.4.14 Digital Data Access (a.k.a. BellSouth SPA DS0 Digital Data) Service (DDAS) (Cont'd)

B. Application of Rates (Cont'd)

1. (Cont'd)

b. A Termination Liability Charge will not apply for IC or end user requests for moves of service under CSPP subject to the provisions set forth in E2.4.9.A.8. preceding.

The Termination Liability Charge is determined by multiplying the contracted monthly rate times the number of months in the contract plan, less the contracted monthly rate times the number of months the service has been installed***, multiplied by a factor. The factor is fifty percent (50%) for contracts that have been in effect twelve months or less, or twenty percent (20%) for contracts that have been in effect longer than twelve months***. An example is as follows: (C)

- An IC or end user subscribes to Digital Data Access (a.k.a. BellSouth SPA DS0 Digital Data) service using the twenty-four to forty-two month payment plan. The actual duration of the contract plan is for thirty months. The subscriber terminates the service after twelve months. The total liability charge is thirty months times the monthly rate. The amount is then reduced to reflect the number of months the subscriber has had the service, which in this example is twelve months. Therefore, the Termination Liability Charge is ***fifty percent (50%) of this amount*** calculated as follows: (C)

Termination Liability Charges = ***.50 x [***(30 months x monthly rate) - (12 months x monthly rate)***]*** (C)

E7.4.15 Zone Pricing

High Capacity (a.k.a. BellSouth SPA DS1) service (1.544 Mbps) is organized into three pricing zones. Rate levels for the Local Channel, Interoffice Channel, and DS1 Basic Channelization will be billed in accordance with the pricing zone assignment of the serving wire center. The pricing zone assignment for each Company serving wire center is specified in the National Exchange Carrier Association (NECA) Tariff F.C.C. No. 4.

Interoffice Channel mileage that is divided between two serving wire centers in differently priced zones will be billed at the higher priced zone rate. Channelization rates will be determined by the location of the channelization arrangement.

All BellSouth marks contained herein and as set forth in the trademarks and servicemarks section of this Tariff are owned by BellSouth Intellectual Property Corporation.

E7. SPECIAL ACCESS (A.K.A. BELLSOUTH SPA) SERVICE

E7.4 Rate Regulations (Cont'd)

E7.4.16 SMARTRing® Service (a.k.a. BellSouth Dedicated Ring)

A. Self-healing Multi-nodal Alternate Route Topology Ring

1. Monthly rates and charges as specified in E7.5.17 following apply for each SMARTRing® service (a.k.a. BellSouth Dedicated Ring). Customers must specify network capacity at the time of the initial order. In an Overlay Ring Arrangement where a customer's overlaying SMARTRing® service (a.k.a. BellSouth Dedicated Ring) rides the customer's host SMARTRing® service (a.k.a. BellSouth Dedicated Ring), the overlay ring will share the transport of the host ring between common node locations. Rate categories at OC-3, OC-3+, OC-12, OC-24, OC-48, OC-48+, ***OC-192*** and ***OC-192+*** capacity levels include Customer Nodes, Central Office Nodes, Local Channels, Alternate Central Office Channels, Interoffice Channels and Internodal Channels. OC-24 SMARTRing® service (a.k.a. BellSouth Dedicated Ring) is only available to existing CSPP customers or under month-to-month arrangements. Rate categories for OC-1 SMARTRing® service (a.k.a. BellSouth Dedicated Ring) include Customer Nodes and Central Office Nodes. Channel Interfaces are required at each node on the network and must be associated with a SMARTRing® service (a.k.a. BellSouth Dedicated Ring). An OC-1 Overlay Ring Arrangement requires an OC-1 Channel Interface at each node involved. An OC-3 Overlay Ring Arrangement requires an OC-3 Channel Interface at each node involved. An OC-3+ or OC-12 Overlay Ring Arrangement requires an OC-12 Channel Interface at each node involved. ***An OC-48 or OC-48+ Overlay Ring Arrangement requires an OC-48 Channel Interface at each node involved.*** In Overlay Ring Arrangements, the customer must order a Channel Interface for each entry to or exit from the host ring. In all other situations, the number of Channel Interfaces ordered will depend on whether the customer desires a working interface, or a working interface and a protection interface. The quantity of channel interfaces ordered may not exceed the capacity ordered. When a 28 DS1 Channel System is utilized to activate DS1 channels, the appropriate number of DS1 Channel Interfaces are required in lieu of an originating or terminating DS3 or STS-1 Channel Interface. (C)
2. Nonrecurring charges for Local, Alternate Central Office, Interoffice and Internodal Channels apply for each channel for month-to-month customers. Nonrecurring charges are not applicable when the ring level rate elements and channel interfaces are ordered under TPP arrangements. SMARTRing® service (a.k.a. BellSouth Dedicated Ring) ring level rate elements are defined as following: Local Channel, Interoffice Channel, Internodal Channel, Alternate Central Office Channel, Customer Node and Central Office Node. Nonrecurring charges do apply for the Channel Interface Reallocation rate element and the SMARTRing® service (a.k.a. BellSouth Dedicated Ring) rearrangement rate elements (Surveillance and Reconfiguration) for CSPP and TPP customers. When the customer requests two separate routes and the routing is provided as described in E7.2.16.A preceding, charges apply for the Local Channels and any Interoffice Channels on the requested route. Recurring charges for Local, Alternate Central Office, Interoffice and Internodal Channels apply for each quarter air mile increment of the channel. Fractions of a quarter mile will always round up to the next quarter air mile before determining the mileage and applying the rate. For channels which are less than one quarter mile, a minimum charge of one quarter mile applies.
3. For Internodal Channels, charges apply as appropriate either for the same wire center area or contiguous serving wire center areas, as specified in E7.5 17.A.4.
4. Nonrecurring charges for Customer Nodes and Central Office Nodes apply per node for month-to-month customers and are based upon the capacity of the ring configuration. Nonrecurring charges are not applicable when the preceding rate elements are ordered under TPP arrangements. Recurring rates for Customer and Central Office Nodes apply per node and are also based upon the capacity of the ring configuration.
5. When the customer orders an OC-1 SMARTRing® service (a.k.a. BellSouth Dedicated Ring) Overlay Ring Arrangement riding the customer's host OC-12, OC-48, or OC-48+ SMARTRing® service (a.k.a. BellSouth Dedicated Ring), recurring charges apply per OC-1 Customer Node and/or OC-1 Central Office Node, in addition to the recurring and nonrecurring charges for associated Channel Interfaces.
6. When the customer orders an OC-3 SMARTRing® service (a.k.a. BellSouth Dedicated Ring) service Overlay Ring Arrangement riding the customer's host OC-12, OC-48, OC-48+, ***OC-192*** or ***OC-192+*** SMARTRing® service (a.k.a. BellSouth Dedicated Ring), recurring charges apply per OC-3 Customer Node and/or OC-3 Central Office Node, in addition to the recurring and nonrecurring charges for associated Channel Interfaces. Nonrecurring charges only apply for month-to-month customers. (C)
7. When the customer orders an ***OC-3,*** OC-3+ or OC-12 Overlay Ring Arrangement riding the customer's host OC-48, ***OC-48+, OC-192 or OC-192+*** SMARTRing® service (a.k.a. BellSouth Dedicated Ring), recurring charges apply per ***OC-3,*** OC-3+ and/or OC-12 Customer Node and/or per ***OC-3,*** OC-3+ and/or OC-12 Central Office Node, in addition to the charges for associated Channel Interfaces. Nonrecurring charges only apply for month-to-month customers. (C)

All BellSouth marks contained herein are owned by BellSouth Intellectual Property Corporation

E7. SPECIAL ACCESS (A.K.A. BELLSOUTH SPA) SERVICE

E7.4 Rate Regulations (Cont'd)

E7.4.16 SMARTRing® Service (a.k.a. BellSouth Dedicated Ring) Cont'd)

A. Self-healing Multi-nodal Alternate Route Topology Ring (Cont'd)

8. In all Overlay Ring Arrangements, the number of OC-1, OC-3, OC-12 and/or ***OC-48*** Channel Interfaces required will be based upon the characteristics of the overlaying ring. (C)

9. The rates for Customer Channel Interfaces apply for each origination and for each termination of an activated DS1, DS3, STS-1, OC-3, OC-12, ***OC-48*** and/or ***1000 Mbps interface*** at the Customer Node. For interfaces ordered on a month-to-month basis the nonrecurring charge applies per interface. For interfaces ordered under CSPP, nonrecurring charges are established on a per order basis for the first DS1, DS3, STS-1, OC-3 and/or OC-12 which originates or terminates at a Customer Node and for each additional DS1, DS3, STS-1, OC-3, and/or OC-12 which originates or terminates at the same Customer Node. For interfaces ordered under TPP, there are no nonrecurring charges associated with the installation. The recurring rate applies on a per Customer Node basis for each origination and for each termination of an activated DS3 and/or DS1 at a Customer Node. (C)

10. In addition, OC-12 and or OC-48 customers with DS3 and/or STS-1 interfaces at the Customer Node electing to connect with DS1 services at a Central Office Node, must obtain a 28 DS1 Channel System and the appropriate number of DS1 Channel Interfaces in lieu of a DS3 or STS-1 Channel Interface. A maximum of 28 DS1 Channel Interfaces can be activated for each 28 DS1 Channel System utilized. For service ordered under CSPP, nonrecurring charges are established on a per order basis for the first 28 DS1 Channel System and for each additional 28 DS1 Channel System at that same Central Office Node. Nonrecurring charges are also established for the first DS1 Channel Interface which originates/terminates in a 28 DS1 Channel System and each additional DS1 Channel Interface which originates/terminates in that same DS1 Channel System. For DS1 Channel Systems ordered under TPP, nonrecurring charges do not apply. For DS1 Channel Systems ordered on a month-to-month basis, nonrecurring charges apply. The recurring rate applies for each 28 DS1 Channel System and each DS1 Channel Interface activated per Central Office Node.

11. A nonrecurring charge applies for SMARTRing® service (a.k.a. BellSouth Dedicated Ring) Surveillance, one for each Customer Node and each Central Office Node, per SMARTRing® service (a.k.a. BellSouth Dedicated Ring) rearranged. A nonrecurring charge applies for Reconfiguration, one per reconfiguration of each STS-1 group at each node where such reconfiguration capability is desired. These rate elements apply when the Customer adds FlexServ® service (a.k.a. BellSouth SPA Customer Reconfiguration) to an existing SMARTRing® service (a.k.a. BellSouth Dedicated Ring) as set forth in E7.2.16.A. preceding.

12. For CSPP customers, first and additional nonrecurring charges will be applied when ordering the same rate element between the same locations with the same installation date. First and additional nonrecurring changes are not applicable under TPP arrangements.

13. SMARTRing® service (a.k.a. BellSouth Dedicated Ring) purchased prior to August 23, 1996, is available under several CSPP arrangements: Plan A (24-48 Months), Plan B (49-72 Months) or Plan C (73-96 Months). Renewals of existing SMARTRing® service (a.k.a. BellSouth Dedicated Ring) or purchases of new SMARTRing® service (a.k.a. BellSouth Dedicated Ring) on or after August 23, 1996, will only be available under TPP arrangements. In order to accommodate more flexible customer situations, SMARTRing® service (a.k.a. BellSouth Dedicated Ring) is available under several TPP arrangements: Plan A (12-36 Months), Plan B (37-60 Months) or Plan C (61-96 Months). Month-to-month arrangements (with a minimum of four months) are available for SMARTRing® service (a.k.a. BellSouth Dedicated Ring).

14. CSPP and TPP arrangements are provided under the terms and conditions specified in E2.4.9 preceding, except as modified following. For all payment plans, the following regulations apply:

    a. SMARTRing® service (a.k.a. BellSouth Dedicated Ring), whether initially or subsequently ordered in conjunction with BellSouth Dedicated Ring, must be provided under the same TPP payment plan with the same service period and both services are to be coterminous.

    b. All rate elements, for a given SMARTRing® service (a.k.a. BellSouth Dedicated Ring), whether initially or subsequently ordered, must be provided under the same payment plan with the same service period and are coterminous upon disconnect of the SMARTRing® service (a.k.a. BellSouth Dedicated Ring). However, Channel Interfaces, except those utilized to interface an overlaying ring with its host ring, may be provided under a month-to-month arrangement which is equal to or less than the payment plan for the associated SMARTRing® service (a.k.a. BellSouth Dedicated Ring). Customers with Channel Interfaces provided under a CSPP payment period which began prior to August 22, 1994, may convert those Channel Interfaces to a month-to-month or payment plan arrangement which is equal to or less than the payment plan for the associated SMARTRing® service (a.k.a. BellSouth Dedicated Ring), at the current rates and charges.

All BellSouth marks contained herein are owned by BellSouth Intellectual Property Corporation

E7. SPECIAL ACCESS (A.K.A. BELLSOUTH SPA) SERVICE

E7.4 Rate Regulations (Cont'd)

E7.4.16 SMARTRing® Service (a.k.a. BellSouth Dedicated Ring) (Cont'd) (N)

A. Self-healing Multi-nodal Alternate Route Topology Ring (Cont'd) (N)

14. (Cont'd) (N)

    c. In a shared network arrangement, where the host subscriber and the connecting service user subscribes to services under CSPP or TPP arrangements, the payment periods for directly associated channelized rate elements must be equal to or less than the payment periods for the host service, or the service user must order those rate elements under month-to-month payment terms. Where the host subscriber receives services under month-to-month payment terms, a connecting user must also receive directly associated channelized rate elements under month-to-month payment terms. (N)

15. The rates applicable to a month-to-month payment plan are subject to Company initiated charges. (N)

16. For CSPP customers, a termination liability charge will be applicable if services are disconnected prior to the end of the chosen service period. The applicable charge is equal to the number of months remaining in the rate stabilized service period times 60 percent of the monthly rates for SMARTRing® service (a.k.a. BellSouth Dedicated Ring) which includes all Nodes, Channel Interfaces, Local Channels, Alternate Central Office Channels, Internodal Channels and/or Interoffice Channels provided under the CSPP arrangement. (N)

    Termination liability charges for SMARTRing® service (a.k.a. BellSouth Dedicated Ring) TPP customers are applicable as specified in E2.4.9.C. preceding.

17. When a service period under an existing CSPP or TPP arrangement is completed and a customer elects to revert to a month-to-month payment option, no minimum period is applicable. (N)

18. The TPP customer of record will have a 60 day grace period after which month-to-month rates will apply. (N)

19. Customers may upgrade from a lower capacity SMARTRing® service (a.k.a. BellSouth Dedicated Ring) to a higher capacity SMARTRing® service (a.k.a. BellSouth Dedicated Ring) without incurring any termination charges if the following conditions are met: (N)

    a. the order for the upgraded SMARTRing® service (a.k.a. BellSouth Dedicated Ring) and the order for the disconnect of the existing SMARTRing® service (a.k.a. BellSouth Dedicated Ring) are received by the Company at the same time, (N)

    b. the new SMARTRing® service (a.k.a. BellSouth Dedicated Ring) is provided between the same customer and Central Office locations as the discontinued SMARTRing® service (a.k.a. BellSouth Dedicated Ring), (N)

    c. the number of Channel Interfaces activated under the new capacity SMARTRing® service (a.k.a. BellSouth Dedicated Ring) is greater than the number of Channel Interfaces activated under the existing capacity SMARTRing® service (a.k.a. BellSouth Dedicated Ring). (N)

    d. the expiration date of the new SMARTRing® service (a.k.a. BellSouth Dedicated Ring) payment plan is subsequent to the payment plan of the ring being discontinued. (N)

20. Customers may also upgrade existing SMARTRing® service (a.k.a. BellSouth Dedicated Ring) to a new SMARTRing® service (a.k.a. BellSouth Dedicated Ring) of the same capacity without incurring a termination liability charge, if the customer is concurrently ordering a new capability which cannot be provisioned with the existing SMARTRing® service (a.k.a. BellSouth Dedicated Ring) and if the conditions set forth in 19. preceding are met. (N)

21. Ring level billing is defined as billing for the following rate elements: Local Channel, Interoffice Channel, Internodal Channel Alternate Central Office Channel, Customer Node and Central Office Node. Billing for Customer Channel Interfaces and Central Office Channel Interfaces recurring and nonrecurring charges will be effective upon activation to the SMARTRing® service (a.k.a. BellSouth Dedicated Ring). (N)

22. If the Service Establishment Date extends beyond one year from the customer's order date due to Company reasons, the preceding conversion provisions apply. If the Service Establishment Date extends beyond one year from the customer's order date for other reasons, the preceding conversion provisions do not apply and billing for all recurring and nonrecurring charges will be effective with the Service Establishment Date. (N)

® Registered Service Mark of BellSouth Corporation

E7. SPECIAL ACCESS (A.K.A. BELLSOUTH SPA) SERVICE

E7.4 Rate Regulations (Cont'd)

E7.4.17 Reserved For Future Use (N)

E7.4.18 Reserved For Future Use (N)

E7.4.19 Reserved For Future Use (N)

E7.4.20 Reserved For Future Use (N)

E7.4.21 Reserved For Future Use (N)

E7.4.22 Reserved For Future Use (N)

E7.4.23 Reserved For Future Use (N)

E7.4.24 Reserved For Future Use (N)

E7.4.25 Reserved For Future Use (N)

E7.4.26 Reserved For Future Use (N)

E7.4.27 Reserved For Future Use (N)

E7.4.28 Reserved For Future Use (N)

E7.4.29 Reserved For Future Use (N)

E7.4.30 Reserved For Future Use (N)

E7.4.31 Reserved For Future Use (N)

All BellSouth marks contained herein and as set forth in the trademarks and servicemarks section of this Tariff are owned by BellSouth Intellectual Property Corporation.

E7. SPECIAL ACCESS (A.K.A. BELLSOUTH SPA) SERVICE

E7.4 Rate Regulations (Cont'd)

E7.4.32 BellSouth Metro Ethernet Service

A. General

1. The minimum service period for BellSouth Metro Ethernet service is four (4) months.
2. Suspension of BellSouth Metro Ethernet service is not allowed.
3. BellSouth Metro Ethernet service is available 24 hours per day, 7 days per week, except for preventive maintenance.

   Due to the nature of BellSouth Metro Ethernet service it will be necessary to perform preventive maintenance and software updates. This will mean that BellSouth Metro Ethernet service will be unavailable during the period of time when preventive maintenance is being performed. This could result in the service being unavailable during the period between 1:00 AM and 5:00 AM Eastern Time on Sundays and Saturdays. However, the Company reserves the right to perform maintenance at any time at its discretion that it believes such maintenance is necessary. The Company will make a reasonable effort to provide notice to those customers likely to be affected by such maintenance work.
4. Obligations of customer and Company:
   (a) The Company is not responsible for the installation, operation or maintenance of any equipment provided by the customer.
   (b) The customer is responsible for the provision and maintenance of all customer provided equipment and to insure that the operating characteristics of this equipment is comparable with and does not interfere with the service offered by the Company.
   (c) At the BellSouth Metro Ethernet service Connection point the customer's signals must conform to IEEE Standards 802.3, 802.3u or 802.3z. To meet end-to-end delay requirements contained in these aforementioned standards, the customer may be required to provide additional equipment.
5. In some cases, the Company and another Incumbent Local Exchange Company (ILEC) may agree to jointly provide a customer Metro Ethernet Service. The rates and charges for the BellSouth Metro Ethernet service Connection are applicable for such connectivity; charges for BellSouth Metro Ethernet Additional Mileage are also applicable when the mileage from the BellSouth/ILEC meet-point to the BellSouth Metro Ethernet wire center associated with the service is over ten (10) miles. The Company is only responsible for the ordering, provisioning, maintaining and billing of such service up to the meet-point (i.e., demarcation point with the ILEC). BellSouth Metro Ethernet service SLA credits shall only be applicable for the portion of the service provided within the territory of the Company; such credits are appropriate only for missed commitments determined to be the fault of the Company.

(M)

Material previously appearing on this page now appears on page(s) 33.11 of this section.

All BellSouth marks contained herein and as set forth in the trademarks and service marks section of the BellSouth Tariffs are owned by BellSouth Intellectual Property Corporation.

E7. SPECIAL ACCESS (A.K.A. BELLSOUTH SPA) SERVICE

E7.4 Rate Regulations (Cont'd)

E7.4.32 BellSouth Metro Ethernet Service

A. General (Cont'd)

6. Basic, Premium and Virtual BellSouth Metro Ethernet Service Connections of 10 Mbps or higher may alternatively be provided to a customer premises over the customer's SMARTRing service (a.k.a. BellSouth SPA Dedicated Ring).

   The customer is required to purchase the appropriate SMARTRing service (a.k.a. BellSouth SPA Dedicated Ring) BellSouth Metro Ethernet Backbone interfaces that are a bandwidth equal to the bandwidth of the BellSouth Metro Ethernet Service backbone transport that is standard for the specific type and speed of BellSouth Metro Ethernet Service Connection serving that customer premises. (A chart is provided herein which sets forth the backbone bandwidth of each type and speed of BellSouth Metro Ethernet Service Connection.) Standard BellSouth Metro Ethernet Service features are available on such alternative arrangements, with the exception that Automatic Protection Switching is not available.

   For such applications using SMARTRing service (a.k.a. BellSouth SPA Dedicated Ring) as alternate transport, the BellSouth Metro Ethernet Service Connection will provide data channel transport to connect the termination of the SMARTRing service (a.k.a. BellSouth SPA Dedicated Ring) at the central office node, to the BellSouth Metro Ethernet Service wire center associated with the BellSouth Metro Ethernet Service Connection (i.e., the central office of the Metro Ethernet Service switch).

   When the SMARTRing service (a.k.a. BellSouth SPA Dedicated Ring) central office node is located greater than 10 miles from the BellSouth Metro Ethernet Service wire center, BellSouth Metro Ethernet Service Additional Mileage charges will also be applicable.

   For BellSouth Metro Ethernet Service Connections utilizing the customer's LightGate service or SMARTRing service as alternate transport, the committed bandwidth for select speeds will be as shown in BellSouth Technical Reference TR-73632.

Metro Ethernet Connection	**Metro Ethernet Backbone Bandwidth**
Basic 10 Mbps	100 Mbps (1 STS-1)
Basic 100 Mbps	100 Mbps (3 STS-1)
Basic 1000 Mbps	1000 Mbps
Premium 10, 20, 50 Mbps (Fixed)	100 Mbps (1 STS-1)
Premium 10, 20, 50 Mbps (Burst)	100 Mbps (3 STS-1)
Premium 100 Mbps (Fixed)	Fractional 1000 Mbps at 150 Mbps
Premium 250 Mbps (Fixed)	Fractional 1000 Mbps at 300 Mbps
Premium 500 Mbps (Fixed)	Fractional 1000 Mbps at 600 Mbps
Premium 900 Mbps (Fixed)	1000 Mbps
Premium 100, 250, 500 Mbps (Burst)	1000 Mbps
Virtual 10, 20, 50 Mbps	100 Mbps (1 STS-1)
Virtual 80 Mbps	100 Mbps (3 STS-1)
Virtual 100 Mbps	Fractional 1000 Mbps at 150 Mbps
Virtual 200, 300 Mbps	Fractional 1000 Mbps at 300 Mbps
Virtual 450 Mbps	Fractional 1000 Mbps at 450 Mbps
Virtual 600 Mbps	Fractional 1000 Mbps at 600 Mbps
Virtual 750, 900 Mbps	1000 Mbps

7. In some cases, the Telephone Company and an Independent Telephone Company (ICO) may agree to jointly provide a customer Metro Ethernet Service. The rates and charges for the BellSouth Metro Ethernet Service Connection are applicable for such connectivity; charges for BellSouth Metro Ethernet Additional Mileage are also applicable when the mileage from the BellSouth/ICO meet-point to the BellSouth Metro Ethernet wire center associated with the service is over 10 miles. The Telephone Company is only responsible for the ordering, provisioning, maintaining and billing of such service up to the meet-point (i.e., demarcation point with the ICO). BellSouth Metro Ethernet Service SLA credits shall only be applicable for the portion of the service provided within the territory of the Telephone Company; such credits are appropriate only for missed commitments determined to be the fault of the Telephone Company. (N)

All BellSouth marks contained herein and as set forth in the trademarks and service marks section of the BellSouth Tariffs are owned by BellSouth Intellectual Property Corporation.

E7. SPECIAL ACCESS (A.K.A. BELLSOUTH SPA) SERVICE

E7.4 Rate Regulations (Cont'd)

E7.4.32 BellSouth Metro Ethernet Service (Cont'd)

B. Rate Categories and Regulations

1. The following rate categories apply for BellSouth Metro Ethernet service. Applicable rates and charges are provided in E7.5.22 following.
   - (a) Basic BellSouth Metro Ethernet service Connection
   - (b) Premium BellSouth Metro Ethernet service Connection
   - (c) Dedicated BellSouth Metro Ethernet service Connection
   - (d) Virtual BellSouth Metro Ethernet service Connection
   - (e) BellSouth Metro Ethernet service Additional Mileage Charge
   - (f) Priority Plus Feature
   - (g) Q-Forwarding Feature
   - (h) VLAN Aggregation Feature
   - (i) ***CNM*** **-** Metro Ethernet Reporting Feature (T)
   - (j) Class of Service (CoS) Profile
   - (k) Automatic Protection Switching Feature
   - (l) Service Reconfiguration Charge
   - (m) System Reconfiguration Charge
2. BellSouth Metro Ethernet service is available under month-to-month rates as provided in E7.5.22.A. following or under the optional Transport Payment Plan (TPP) (as described in E2.4.9.C. of this Tariff) to receive the TPP rates provided in E7.5.22.B. following.
3. BellSouth Metro Ethernet service Connections are provided utilizing various Ethernet equipment configurations referred to herein as "physical service types". The physical service type of each BellSouth Metro Ethernet Connection is provided in the chart in 5. following.
4. A hierarchy of the various BellSouth Metro Ethernet service Connections by capability (i.e., dedicated, basic, premium and virtual) and speed is provided in the chart in 5. following. This chart provides a higher order of service ranking that is utilized to determine the appropriate nonrecurring charges for service reconfiguration requests. This ranking is also utilized to determine if termination liability is applicable for specific reconfiguration requests if the service is under a TPP term commitment.

All BellSouth marks contained herein and as set forth in the trademarks and service marks section of the BellSouth Tariffs are owned by BellSouth Intellectual Property Corporation.

E7. SPECIAL ACCESS (A.K.A. BELLSOUTH SPA) SERVICE

E7.4 Rate Regulations (Cont'd)

E7.4.32 BellSouth Metro Ethernet Service (Cont'd)

B. Rate Categories and Regulations (Cont'd)

5. The following informational chart provides the physical service type of each BellSouth Metro Ethernet Connection and provides the other BellSouth Metro Ethernet Connections which are considered to be a higher order of service (BellSouth Metro Ethernet service hierarchy).

Metro Ethernet Connection (Mbps):	Physical Service Type:	Higher Order of Service (Mbps):
- Dedicated 100	Dedicated I	Basic 1000; Dedicated 1000; Premium[1] 100,250,500,900[2]; Virtual 50,80,100,200,300,450, 600,***750***,900 (C)
- Dedicated 1000	Dedicated II	Premium[1] 500,900[2]; Virtual 450,600,750,900
- Basic 2	Basic 0	Basic 4,8,10,100,1000; Premium[1] 2, 4, 8,10,20,50,100,250,500; Virtual 2,4,8,10,20,50,80,100,200,300, 450,600,750,900
- Basic 4	Basic 0	Basic 8,10,100,1000; Premium[1] 4, 8,10,20,50,100,250,500; Virtual 4,8,10,20,50,80,100,200,300,450, 600,750,900
- Basic 8	Basic 0	Basic 10,100,1000; Premium[1] 8,10,20,50,100,250,500; Virtual 8,10,20,50,80,100,200,300,450,600,750, 900
- Basic 10	Basic I	Basic 100,1000; Premium[1] 10,20,50,100,250,500,900[2]; Virtual 10,20,50,80,100, 200,300, 450,600,750,900
- Basic 100	Basic II	Basic 1000; Premium[1] 100,250,500,900[2]; Virtual 80, 100,200,300,450,600,750,900
- Basic 1000	Basic III	Premium[1] 500,900[2]; Virtual 450,600,750,900
- Premium 2	Premium 0	Basic 100,1000; Premium[1] 4,8,10,20,50,100,250,500; Virtual 2,4,8,10,20,50,80,100,200,300,450,600, 750,900
- Premium 4	Premium 0	Basic 100,1000; Premium[1] 8,10,20,50,100,250,500; Virtual 4,8,10,20,50,80,100,200,300,450,600,750, 900
- Premium 8	Premium 0	Basic 100,1000; Premium[1] 10,20,50,100,250,500; Virtual 8,10,20,50,80,100,200,300,450,600,750,900
- Premium[1] 10	Premium I	Basic 1000; Premium[1] 20,50,100,250,500,900[2]; Virtual 10,20,50,80,100,200,300, 450,600,750,900
- Premium[1] 20	Premium I	Basic1000;Premium[1]50,100,250,500,900[2];Virtual 20,50,80,100,200,300,450, 600,750,900
- Premium[1] 50	Premium I	Premium[1] 100,250,500,900[2]; Virtual 50,80,100,200, 300,450,600,750,900
- Premium[1] 100	Premium II	Premium[1] 250,500,900[2]; Virtual 100,200,300,450,600,750,900
- Premium[1] 250	Premium II	Premium[1] 500,900[2]; Virtual 300,450,600,750,900
- Premium[1] 500	Premium II	Premium 900[2]; Virtual 450,600,750,900
- Premium 900[2]	Premium II	Virtual 900
- Virtual 2	Virtual 0	Basic 100,1000; Premium[1] 10,20,50,100,250,500; Virtual 4,8,10,20,50,80,100,200,300,450,600,750,900
- Virtual 4	Virtual 0	Basic 100,1000; Premium[1] 10,20,50,100,250,500; Virtual 8,10,20,50,80,100,200,300,450,600,750,900
- Virtual 8	Virtual 0	Basic 100,1000; Premium[1] 10,20,50,100,250,500; Virtual 10,20,50,80,100,200,300,450,600,750,900
- Virtual 10	Virtual I	Basic 1000; Premium[1] 20,50,100,250,500,900[2]; Virtual 20,50,80,100,200,300,450, 600, 750,900
- Virtual 20	Virtual I	Basic 1000; Premium[1] 50,100,250,500,900[2]; Virtual 50,80,100,200,300,450,600,750,900
- Virtual 50	Virtual II	Basic 1000; Premium[1] 100,250,500,900[2]; Virtual 80, 100,200,300,450,600,750,900
- Virtual 80	Virtual II	Basic 1000; Premium[1] 100,250,500,900[2]; Virtual 100, 200,300,450,600,750,900
- Virtual 100	Virtual II	Premium[1] 250,500,900[2]; Virtual 200,300,450,600,750,900
- Virtual 200	Virtual II	Premium[1] 500,900[2]; Virtual 300,450,600,750,900
- Virtual 300	Virtual II	Premium[1] 500,900[2]; Virtual 450,600,750,900
- Virtual 450	Virtual II	Premium 900[2]; Virtual 600,750,900
- Virtual 600	Virtual II	Premium 900[2]; Virtual 750,900
- Virtual 750	Virtual II	Premium 900[2]; Virtual 900
- Virtual 900	Virtual II	None offered at this time

Note in the above chart that the reference to Dedicated/Basic 1000 Mbps refers to Dedicated/Basic 1 Gbps.

Note 1: Fixed Mode or Burst Mode.

Note 2: Premium 900 Mbps only available as Fixed Mode.

All BellSouth marks contained herein and as set forth in the trademarks and service marks section of the BellSouth Tariffs are owned by BellSouth Intellectual Property Corporation.

E7. SPECIAL ACCESS (A.K.A. BELLSOUTH SPA) SERVICE

E7.4 Rate Regulations (Cont'd)

E7.4.32 BellSouth Metro Ethernet Service (Cont'd)

B. Rate Categories and Regulations (Cont'd)

6. A BellSouth Metro Ethernet reconfiguration nonrecurring charge is applicable for a customer request to reconfigure (rearrange) an existing BellSouth Metro Ethernet Connection. The appropriate reconfiguration charge is dependent upon the physical work required to fulfill the request and applies in lieu of other nonrecurring charges.

   A Service Reconfiguration Charge is applicable for requests where the work required is a minor change that does not involve changing the physical service type. The Service Reconfiguration Charge is applicable for a request to change an existing connection to a different connection that is the same physical service type ***that is a lower order of service***, is applicable for a request to change a Premium connection from fixed mode to burst mode (and vice versa) and is applicable for a request to change a Premium connection to add or delete the Priority Plus feature. The Service Reconfiguration Charge is also applicable for changing an existing Virtual connection CoS Profile. (C)

   A System Reconfiguration Charge is applicable for requests where the work required involves changing to a different physical service type or involves major support system changes. The System Reconfiguration Charge is applicable for requests to change an existing connection to a different connection that is a different physical service type ***that is a lower order of service***, to change the network channel terminating equipment (NCTE) interface option from optical to electrical (or vice-versa), and to change the premises powering options from AC power to DC power (or vice-versa). (C)

7. **(DELETED)** (D)

All BellSouth marks contained herein and as set forth in the trademarks and service marks section of the BellSouth Tariffs are owned by BellSouth Intellectual Property Corporation.

E7. SPECIAL ACCESS (A.K.A. BELLSOUTH SPA) SERVICE

E7.4 Rate Regulations (Cont'd)

E7.4.32 BellSouth Metro Ethernet Service (Cont'd)

B. Rate Categories and Regulations (Cont'd)

8. A Premium BellSouth Metro Ethernet Connection-Fixed Mode and Premium BellSouth Metro Ethernet Connection-Burst Mode of the same speed are considered to be the same order of service and same physical service type. A Service Reconfiguration Charge is applicable for a customer request to reconfigure a Premium BellSouth Metro Ethernet Connection from Fixed Mode to Burst Mode (at the same speed), or vice versa; this nonrecurring charge is in lieu of the nonrecurring charge for the new connection. Such a change is not treated as a disconnect and there will be no change in the minimum period requirements.

   A Virtual BellSouth Metro Ethernet Connection request to modify its CoS Profile is not considered as a request to change the order of service or physical service type. A Service Reconfiguration Charge is applicable for such requests. (N)

9. Except as specified in 8. preceding, a BellSouth Metro Ethernet Connection not shown as a higher order of service in the hierarchy chart in 5. preceding for a given BellSouth Metro Ethernet Connection is considered to be a lower order of service. A reconfiguration charge is applicable for a customer request to change an existing BellSouth Metro Ethernet Connection to a different BellSouth Metro Ethernet Connection that is a lower order of service; the appropriate reconfiguration charge is applicable in lieu of the standard nonrecurring charge for the lower order of service connection. A Service Reconfiguration Charge is applicable when the lower order of service connection is the same physical service type; a System Reconfiguration Charge is applicable when the lower order of service is a different physical service type. New minimum period requirements are established for the lower order of service connection.

10. A System Reconfiguration Charge is applicable for a customer request to change the premises powering option (AC power to DC power) or NCTE signaling interface option (optical to electrical, or vice-versa) on an existing BellSouth Metro Ethernet Connection. Such a change is not treated as a disconnect and there will be no change in the minimum period requirements.

11. A move of a BellSouth Metro Ethernet service will be as follows (in accordance with E7.4.5 preceding and, if applicable, E2.4.9.C.5. of this Tariff).

    When the move is to a new location within the same building, the charge for the move will be an amount equal to one-half of the Connection nonrecurring charge. There will be no change in the minimum period requirements.

    When the move is to a new location in a different building that is within the same serving wire center, the charge for the move will be the nonrecurring charge for the BellSouth Metro Ethernet service Connection. New minimum period requirements will be established.[1]

    When the move is to a new location in a different building that is not in the same serving wire center, the request is treated as a discontinuance and start of service and all associated BellSouth Metro Ethernet service nonrecurring charges will apply. New minimum period requirements will be established. [1]

Note 1: Such moves of Metro Ethernet Service with Automatic Protection Switching (APS) shall additionally incur the full nonrecurring charge for establishing the APS feature at the new premises (as a new APS design will be required). The APS monthly recurring charge may change as appropriate based upon the actual route mileage associated with the new premises' APS design.

All BellSouth marks contained herein and as set forth in the trademarks and service marks section of the BellSouth Tariffs are owned by BellSouth Intellectual Property Corporation.

E7. SPECIAL ACCESS (A.K.A. BELLSOUTH SPA) SERVICE

E7.4 Rate Regulations (Cont'd)

E7.4.32 BellSouth Metro Ethernet Service (Cont'd)

C. Service Level Agreement for Premium BellSouth Metro Ethernet service

Customer networks with Premium BellSouth Metro Ethernet service and ***CNM* -** Metro Ethernet Reporting are provided Service Level Agreements (SLAs) as summarized herein E7.4.32.C. BellSouth Metro Ethernet Service SLAs outlined herein specify the Company's repair and performance commitments for ***CNM* -** Metro Ethernet Reporting customers with Premium Metro Ethernet Connections. Details of the technical measurements and performance results methodologies for each commitment are provided in BellSouth Technical Reference TR-73632. (T)

In accordance with E7.4.32.C.3.(c) following, credits are available for missed commitments to customers purchasing Premium BellSouth Metro Ethernet service with the ***CNM* -** Metro Ethernet Reporting feature. Credits only apply for portions of service provided by the Company. (T)

The following service measurements will outline the service levels the Telephone Company will deliver to ***CNM* -** Metro Ethernet Reporting customers with Premium Metro Ethernet Connections: (T)

Repair Commitment:

- BellSouth Metro Ethernet service Time-to-Repair[1]

Network Service Level Commitments:

- BellSouth Metro Ethernet service Core Network Availability
- BellSouth Metro Ethernet service Core Network Latency

The Repair Commitment is measured on a per occurrence basis for each BellSouth Metro Ethernet Connection. A Fault Report is produced thru the ***CNM* -** Metro Ethernet Reporting system that aids identification of potential outage durations upon which credits may be requested. (T)

The Network Service Level Commitments are measured on the monthly performance of the Metro Ethernet core network during a specific calendar month. An SLA Report is produced thru the Metro Ethernet Reporting system that provides details of missed Network Service Level Commitments upon which credits may be requested based upon a specific calendar month's performance results.

The Company's performance measurement data for the Repair Commitment and Network Service Level Commitments will be collected and calculated utilizing the Company's internal processes as set forth in BellSouth Technical Reference TR-73632. The Company's calculation of its performance shall be the sole determinate of the Company's obligation to provide a credit for a missed performance commitment.

1. SLA Definitions

BellSouth Metro Ethernet service Time to Repair

- BellSouth Metro Ethernet service Time-To-Repair measures the outage duration on a customer's BellSouth Metro Ethernet Connection. This measure will require the customer to report the problem to the BellSouth repair center.
- The repair interval will start with the time the trouble ticket is created and end when the fault is re-mediated. The Service Level Commitment measurement will be based on each individual trouble ticket for a customer's connection. Time for scheduled maintenance windows (as set forth in E7.4.32.A.3. preceding) does not count towards SLA threshold.

BellSouth Metro Ethernet service Network Availability

- BellSouth Metro Ethernet service Network Availability measures the percentage of time during a calendar month that the customer's service is unavailable on the core network. The core network is defined as being from the Ethernet switch serving the customer's A-end to the Ethernet switch serving the customer's B-end. Customer networks that do not span more than one switch in the core network are not eligible for the Network Availability SLA, and one will not be provided.
- This Service Level Commitment will be calculated by measuring and summing the outage for each core network component used by the customer, divided by the total number of components, times the total service time for a particular calendar month. Excluded from the outage time and service time are scheduled maintenance windows (as set forth in E7.4.32.A.3. preceding) and time the network was unavailable due to circumstances outside the Company's control (as set forth in E7.4.32.C.3.(b) following).

Note 1: SLA not applicable if missed due to SMARTRing service (a.k.a BellSouth SPA Dedicated Ring) outage where BellSouth Metro Ethernet is using SMARTRing service (a.k.a BellSouth SPA Dedicated Ring) as alternate transport.

All BellSouth marks contained herein and as set forth in the trademarks and service marks section of the BellSouth Tariffs are owned by BellSouth Intellectual Property Corporation.

E7. SPECIAL ACCESS (A.K.A. BELLSOUTH SPA) SERVICE

E7.4 Rate Regulations (Cont'd)

E7.4.32 BellSouth Metro Ethernet Service (Cont'd)

C. Service Level Agreement for Premium BellSouth Metro Ethernet service[1] (Cont'd)

(M)

1. SLA Definitions (Cont'd) (M)

   BellSouth Metro Ethernet service Network Latency (M)

   - BellSouth Metro Ethernet service Network Latency measures average one-way delay in milliseconds within the core network. The core network is defined as being from the Ethernet switch serving the customer's A-end to the Ethernet switch serving the customer's B-end. Customer networks that do not span more than one switch in the core network are not eligible for the Network Latency SLA, and one will not be provided.
   - This Service Level Commitment will be calculated by averaging the measured latency of simulated traffic within the Metro Ethernet Customer Network (i.e., between each pair of connections) during a calendar month. (M)

2. The Company's Service Level Commitments for Premium BellSouth Metro Ethernet service are as follows: (M)
   - BellSouth Metro Ethernet service Time-To-Repair – 4 hours or less (M)
   - BellSouth Metro Ethernet service Network Availability – 99.9% or higher (M)
   - BellSouth Metro Ethernet service Network Latency – 55 milliseconds or less (M)

3. SLA Restrictions (M)

   (a) The Company will implement SLA provisioning restrictions that will define customer network design requirements and limitations to BellSouth's commitment to meet Service Levels for BellSouth Metro Ethernet service. The customer network design requirements are as follows: (M)

   - A customer must subscribe to the Metro Ethernet Premium Service with ***CNM*** **-** Metro Ethernet Reporting to receive credits for missed Service Level Commitments. (M)(T)
   - Credits are not provided for partial month service. (M)
   - A customer's account must be current to receive a credit. (M)

   (b) SLA Credits do not apply when any stated objective is not met because the Company does not have control over the circumstances causing the objective to be missed. Situations over which the Company does not have control include, but are not limited to, the following: (M)

   - any act, any omission or negligence on the part of the customer, any other customer or any third party, or of any other entity providing a portion of the service, (M)
   - labor difficulties, governmental orders, civil commotions, acts of civil or military authority, embargoes, epidemics, declared National Emergencies, criminal actions against the Company, war, terrorist acts, riots, insurrections, fires, explosions, nuclear accidents, power blackouts, acts of God (including, but not limited to, earthquakes, floods or unusually severe weather) or other circumstances beyond the Company's control, (M)
   - the customer's premises equipment, and (M)
   - unavailability of the customer's facilities and/or equipment including customer-provided power and environmental conditions for BellSouth-owned and operated equipment located on the customer's premises. (M)

   (c) The Customer must request a credit within one month of the Company missing a BellSouth Metro Ethernet service Level Commitment. A customer request for a Network Service Level SLA credit must be submitted on a standard request form issued by the Company that includes the month the SLA commitment was missed, accurate identification of the affected circuit, and the observed measurement of the specific SLA that was missed. A customer request for a Repair SLA credit must be submitted on a standard request form issued by the Company that includes the month the SLA commitment was missed, accurate identification of the affected circuit, and the trouble ticket number of the repair request. The Company will investigate customer requests for any SLA credits to determine the cause of any performance failures reported by the customer. The Company will investigate the customer's request over a period of up to 45 calendar days. The 45-day period will begin when the customer makes the request for credit with their BellSouth Sales Representative. SLA credits will be provided to the customer if the Company determines that the Company had control over the circumstances causing the failure. (M)

Note 1: Details of the technical measurements and performance results methodologies for each Commitment are provided in BellSouth Technical Reference TR-73632. (M)

Material appearing on this page previously appeared on page(s) 33.15 of this section.
Material previously appearing on this page now appears on page(s) 33.15 of this section.

All BellSouth marks contained herein and as set forth in the trademarks and service marks section of the BellSouth Tariffs are owned by BellSouth Intellectual Property Corporation.

E7. SPECIAL ACCESS (A.K.A. BELLSOUTH SPA) SERVICE

E7.4 Rate Regulations (Cont'd)

E7.4.32 BellSouth Metro Ethernet Service (Cont'd)

C. Service Level Agreement for Premium BellSouth Metro Ethernet service[1] (Cont'd)

(M)

4. SLA Credits for Premium Connections with ***CNM*** **-** Metro Ethernet Reporting (M)(T)

The following credits will apply when the Company misses a Service Level Commitment (each credit is described in (a) thru (c) following): (M)

BellSouth Metro Ethernet service Time-To-Repair: (M)

- 0 to 4 hours per incident: No Credit (M)
- Over 4 hours to 24 hours per incident: A credit equal to 3/30 of the monthly recurring charges for all the rate elements[2] associated with the affected Metro Ethernet Connection (M)
- Each additional 24-hour period, per incident: Credit an additional amount equal to 3/30 of the monthly recurring charges for all the rate elements[2] associated with the affected Metro Ethernet Connection (M)

BellSouth Metro Ethernet service Network Availability: (M)

- A credit equal to 3/30 of the monthly recurring charges for all the rate elements[2] associated with the affected Metro Ethernet Connection. (M)

BellSouth Metro Ethernet service Network Latency: (M)

- A credit equal to 3/30 of the monthly recurring charges for all the rate elements[2] associated with the affected Metro Ethernet Connection. (M)

The SLA credit amount will be determined by applying the credits outlined preceding to the rate elements or total billed revenues specified following. (M)

The total credits issued for all SLAs for a specific BellSouth Metro Ethernet service Connection during a single bill period may not exceed the total monthly recurring charges billed for all the rate elements associated with that BellSouth Metro Ethernet service Connection. Credits are not provided for partial month service. (M)

(a) BellSouth Metro Ethernet service Time-To-Repair Credit – The Service Level Commitment measurement will be based on each individual trouble ticket for a customer's connection. Multiple trouble tickets on the same day for the same customer connection will only be eligible for one time-to-repair credit. The SLA credit will apply to the monthly recurring charges for all the rate elements[2] associated with the affected Metro Ethernet Connection. (M)

(b) BellSouth Metro Ethernet service Network Availability Credit[3] – The Service Level commitment measurement will be based on a specific calendar month's performance. The credit will apply for each BellSouth Metro Ethernet service connection that does not meet the availability commitment. The SLA credit will apply to the monthly recurring charges for all the rate elements[2] associated with the affected Metro Ethernet Connection. (M)

(c) BellSouth Metro Ethernet service Latency Credit[3] – The Service Level commitment measurement will be based on a specific calendar month's performance. The credit will apply for each BellSouth Metro Ethernet service connection that does not meet the latency commitment. The SLA credit will apply to the monthly recurring charges for all the rate elements[2] associated with the affected Metro Ethernet Connection. (M)

Note 1: Details of the technical measurements and performance results methodologies for each Commitment are provided in BellSouth Technical Reference TR-73632. (M)

Note 2: Specifically, rate elements for the Metro Ethernet Connection, Additional Mileage and Features. (M)

Note 3: BellSouth Metro Ethernet networks that do not span more than one switch in the core network are not eligible for credits under this SLA. (M)

Material appearing on this page previously appeared on page(s) 33.14 of this section.
Material previously appearing on this page now appears on page(s) 33.14 of this section.

All BellSouth marks contained herein and as set forth in the trademarks and service marks section of the BellSouth Tariffs are owned by BellSouth Intellectual Property Corporation.

E7. SPECIAL ACCESS (A.K.A. BELLSOUTH SPA) SERVICE

E7.4 Rate Regulations (Cont'd)

E7.4.32 BellSouth Metro Ethernet Service (Cont'd)

D. Service Level Agreement for Virtual BellSouth Metro Ethernet service

Customer networks with Virtual BellSouth Metro Ethernet Service and ***CNM*** **-** Metro Ethernet Reporting are provided Service Level Agreements (SLAs) as summarized herein E7.4.32.D. BellSouth Metro Ethernet Service SLAs outlined herein specify the Telephone Company's repair and performance commitments for ***CNM*** **-** Metro Ethernet Reporting customers with Virtual Metro Ethernet Connections. SLAs will be applied on a per Class of Service (CoS) basis for Virtual Connections; traffic representing the different CoS (i.e., Best Effort, Business Critical, Real-Time and Interactive) transported across the same Virtual Connection will have different SLAs. Details of the technical measurements and performance results methodologies for each commitment are provided in BellSouth Technical Reference TR-73632. (T)

In accordance with E7.4.32.D.3.(c) following, credits are available for missed commitments to customers purchasing Virtual BellSouth Metro Ethernet Service with the ***CNM*** **-** Metro Ethernet Reporting feature. Credits only apply for portions of service provided by the Telephone Company. (T)

The following service measurements will outline the service levels the Telephone Company will deliver to ***CNM*** **-** Metro Ethernet Reporting customers with Virtual Metro Ethernet Connections: (T)

Repair Commitment:

- BellSouth Metro Ethernet service Time-to-Repair[1]

Network Service Level Commitments:

- BellSouth Metro Ethernet service Core Network Availability
- BellSouth Metro Ethernet service Core Network Latency[2]
- BellSouth Metro Ethernet service Core Network Jitter[2,3]
- BellSouth Metro Ethernet service Core Network Packet Delivery[2]

The Repair Commitment is measured on a per occurrence basis for each BellSouth Metro Ethernet Connection for all CoS. A Fault Report is produced thru the ***CNM*** **-** Metro Ethernet Reporting system that aids identification of potential outage durations upon which credits may be requested. (T)

The Network Service Level Commitments are measured on the monthly performance of the Metro Ethernet core network during a specific calendar month by CoS. An SLA Report is produced thru the ***CNM*** **-** Metro Ethernet Reporting system that provides details of missed Network Service Level Commitments by CoS upon which credits may be requested based upon a specific calendar month's performance results. (T)

The Company's performance measurement data for the Repair Commitment and Network Service Level Commitments will be collected and calculated utilizing the Company's internal processes as set forth in BellSouth Technical Reference TR-73632. The Company's calculation of its performance shall be the sole determinate of the Company's obligation to provide a credit for a missed performance commitment.

Note 1: SLA not applicable if missed due to SMARTRing service (a.k.a BellSouth SPA Dedicated Ring) outage where BellSouth Metro Ethernet is using SMARTRing service (a.k.a BellSouth SPA Dedicated Ring) as alternate transport.

Note 2: SLA not applicable for Best Effort CoS.

Note 3: SLA not applicable for Business Critical CoS.

All BellSouth marks contained herein and as set forth in the trademarks and service marks section of the BellSouth Tariffs are owned by BellSouth Intellectual Property Corporation.

E7. SPECIAL ACCESS (A.K.A. BELLSOUTH SPA) SERVICE

E7.4 Rate Regulations (Cont'd)

E7.4.32 BellSouth Metro Ethernet Service (Cont'd)

D. Service Level Agreement for Virtual BellSouth Metro Ethernet service[1] (Cont'd) (N)

1. SLA Definitions (N)

BellSouth Metro Ethernet service Time to Repair (N)

- BellSouth Metro Ethernet Service Time-To-Repair measures the outage duration on a customer's BellSouth Metro Ethernet Connection for all CoS. This measure will require the customer to report the problem to the BellSouth repair center. (N)
- The repair interval will start with the time the trouble ticket is created and end when the fault is re-mediated. The Service Level Commitment measurement will be based on each individual trouble ticket for a customer's connection. Time for scheduled maintenance windows (as set forth in E7.4.32.A.3.) does not count towards SLA threshold. (N)

BellSouth Metro Ethernet service Network Availability (N)

- BellSouth Metro Ethernet Service Network Availability measures the percentage of time by CoS during a calendar month that the customer's service is unavailable on the core network. The core network is defined as being from the Ethernet switch serving the customer's A-end to the Ethernet switch serving the customer's B-end. Customer networks that do not span more than one switch in the core network are not eligible for the Network Availability SLA, and one will not be provided. (N)
- This Service Level Commitment will be calculated by CoS by measuring and summing the outage for each core network component used by the customer, divided by the total number of components, times the total service time for a particular calendar month. Excluded from the outage time and service time are scheduled maintenance windows (as set forth in E7.4.32.A.3.) and time the network was unavailable due to circumstances outside the Telephone Company's control (as set forth in E7.4.32.D.3.(b)). (N)

BellSouth Metro Ethernet service Network Latency (N)

- BellSouth Metro Ethernet Service Network Latency measures average one-way delay in milliseconds within the core network. The core network is defined as being from the Ethernet switch serving the customer's A-end to the Ethernet switch serving the customer's B-end. Customer networks that do not span more than one switch in the core network are not eligible for the Network Latency SLA, and one will not be provided. (N)
- This Service Level Commitment will be calculated for each CoS (except the Best Effort CoS) by averaging the measured latency of simulated traffic for each eligible CoS within the Metro Ethernet Customer Network (i.e., between each pair of connections) during a calendar month. (N)

BellSouth Metro Ethernet service Network Jitter (N)

- BellSouth Metro Ethernet Service Jitter measures the average variability, measured in time (milliseconds) between the actual packet transmission rate and the expected packet transmission rate within the core network for Interactive and Real-Time CoS. The core network is defined as being from the Ethernet switch serving the customer's A-end to the Ethernet switch serving the customer's B-end. (N)
- This Service Level Commitment will be calculated for the Interactive CoS and Real-Time CoS by averaging the measured jitter of simulated traffic for each of the customer's eligible CoS queue within the Metro Ethernet Customer Network (i.e., between each pair of connections) during a calendar month. (N)

BellSouth Metro Ethernet service Packet Delivery (N)

- BellSouth Metro Ethernet Service Network Packet Delivery measures the percentage of packets conforming to the committed bandwidth profile that are delivered across the core network, without being dropped or lost as a result of a fault within the Virtual Ethernet network. The core network is defined as being from the Ethernet switch serving the customer's A-end to the Ethernet switch serving the customer's B-end. (N)
- This Service Level Commitment will be calculated for each CoS (except the Best Effort CoS) by averaging the measured packet delivery of simulated traffic for eligible CoS within the Metro Ethernet Customer Network (i.e., between each pair of connections) during a calendar month. (N)

Note 1: Details of the technical measurements and performance results methodologies for each commitment are provided in BellSouth Technical Reference TR-73632. (N)

All BellSouth marks contained herein and as set forth in the trademarks and service marks section of the BellSouth Tariffs are owned by BellSouth Intellectual Property Corporation.

E7. SPECIAL ACCESS (A.K.A. BELLSOUTH SPA) SERVICE

E7.4 Rate Regulations (Cont'd)

E7.4.32 BellSouth Metro Ethernet Service (Cont'd)

D. Service Level Agreement for Virtual BellSouth Metro Ethernet service[1] (Cont'd) (N)

2. The Telephone Company's Service Level Commitments for Virtual BellSouth Metro Ethernet service are as follows: (N)

Time to Repair (N)
- Best Effort CoS: 4 hours or less (N)
- Business Critical CoS: 4 hours or less (N)
- Interactive CoS: 4 hours or less (N)
- Real-Time CoS: 4 hours or less (N)

Network Availability (N)
- Best Effort CoS: 99.500% or greater (N)
- Business Critical CoS: 99.995% or greater (N)
- Interactive CoS: 99.995% or greater (N)
- Real-Time CoS: 99.995% or greater (N)

Latency (one-way) (N)
- Best Effort CoS: Not Applicable (N)
- Business Critical CoS: 15 milliseconds or less (N)
- Interactive CoS: 5 milliseconds or less (N)
- Real-Time CoS: 5 milliseconds or less (N)

Jitter (N)
- Best Effort CoS: Not Applicable (N)
- Business Critical CoS: Not Applicable (N)
- Interactive CoS: 1 millisecond or less (N)
- Real-Time CoS: 1 millisecond or less (N)

Packet Delivery (N)
- Best Effort CoS: Not Applicable (N)
- Business Critical CoS: 99.900% or greater (N)
- Interactive CoS: 99.950% or greater (N)
- Real-Time CoS: 99.995% or greater (N)

Note 1: Details of the technical measurements and performance results methodologies for each commitment are provided in BellSouth Technical Reference TR-73632. (N)

All BellSouth marks contained herein and as set forth in the trademarks and service marks section of the BellSouth Tariffs are owned by BellSouth Intellectual Property Corporation.

E7. SPECIAL ACCESS (A.K.A. BELLSOUTH SPA) SERVICE

E7.4 Rate Regulations (Cont'd)

E7.4.32 BellSouth Metro Ethernet Service (Cont'd)

D. Service Level Agreement for Virtual BellSouth Metro Ethernet service[1] (Cont'd)

3. SLA Restrictions

(a) The Telephone Company will implement SLA provisioning restrictions that will define customer network design requirements and limitations to BellSouth's commitment to meet Service Levels for BellSouth Metro Ethernet Service. The customer network design requirements are as follows:

- A customer must subscribe to the Metro Ethernet Virtual Service with ***CNM*** **-** Metro Ethernet Reporting to receive credits for missed Service Level Commitments. (T)
- Credits are not provided for partial month service.
- A customer's account must be current to receive a credit.

(b) SLA Credits do not apply when any stated objective is not met because the Telephone Company does not have control over the circumstances causing the objective to be missed. Situations over which the Telephone Company does not have control include, but are not limited to, the following:

- any act, any omission or negligence on the part of the customer, any other customer or any third party, or of any other entity providing a portion of the service,
- labor difficulties, governmental orders, civil commotions, acts of civil or military authority, embargoes, epidemics, declared National Emergencies, criminal actions against the Telephone Company, war, terrorist acts, riots, insurrections, fires, explosions, nuclear accidents, power blackouts, acts of God (including, but not limited to, earthquakes, floods or unusually severe weather) or other circumstances beyond the Telephone Company's control,
- the customer's premises equipment, and
- unavailability of the customer's facilities and/or equipment including customer-provided power and environmental conditions for BellSouth-owned and operated equipment located on the customer's premises.

(c) The Customer must request a credit within one month of the Telephone Company missing a BellSouth Metro Ethernet Service Level Commitment. A customer request for a Network Service Level SLA credit must be submitted on a standard request form issued by the Company that includes the month the SLA commitment was missed, accurate identification of the affected circuit, and the observed measurement of the specific SLA that was missed. A customer request for a Repair SLA credit must be submitted on a standard request form issued by the Company that includes the month the SLA commitment was missed, accurate identification of the affected circuit, and the trouble ticket number of the repair request. The Telephone Company will investigate customer requests for any SLA credits to determine the cause of any performance failures reported by the customer. The Telephone Company will investigate the customer's request over a period of up to 45 calendar days. The 45-day period will begin when the customer makes the request for credit with their BellSouth Sales Representative. SLA credits will be provided to the customer if the Company determines that the Telephone Company had control over the circumstances causing the failure.

Note 1: Details of the technical measurements and performance results methodologies for each commitment are provided in BellSouth Technical Reference TR-73632.

All BellSouth marks contained herein and as set forth in the trademarks and service marks section of the BellSouth Tariffs are owned by BellSouth Intellectual Property Corporation.

E7. SPECIAL ACCESS (A.K.A. BELLSOUTH SPA) SERVICE

E7.4 Rate Regulations (Cont'd)

E7.4.32 BellSouth Metro Ethernet Service (Cont'd)

D. Service Level Agreement for Virtual BellSouth Metro Ethernet service[1] (Cont'd)

4. SLA Credits for Virtual Connections with ***CNM*** **-** Metro Ethernet Reporting (Cont'd) (T)

The following credits will apply when the Telephone Company misses a Service Level Commitment on any single CoS (each credit is described in (a) thru (e) following). A maximum of one credit will be applied monthly per Connection for an SLA not met for any CoS that is supported by the customer's CoS profile (i.e., a maximum of one credit is applicable for an SLA even if missed for multiple CoS).

BellSouth Metro Ethernet service Time-To-Repair:

- 0 to 4 hours per incident: No Credit
- Over 4 hours to 24 hours per incident: A credit equal to 3/30 of the monthly recurring charges for all the rate elements[2] associated with the affected Metro Ethernet Connection
- Each additional 24-hour period, per incident: Credit an additional amount equal to 3/30 of the monthly recurring charges for all the rate elements[2] associated with the affected Metro Ethernet Connection

BellSouth Metro Ethernet service Network Availability: A credit equal to 3/30 of the monthly recurring charges for all the rate elements[2] associated with the affected Metro Ethernet Connection

BellSouth Metro Ethernet service Latency: A credit equal to 3/30 of the monthly recurring charges for all the rate elements[2] associated with the affected Metro Ethernet Connection.

BellSouth Metro Ethernet service Jitter: A credit equal to 3/30 of the monthly recurring charges for all the rate elements[2] associated with the affected Metro Ethernet Connection.

BellSouth Metro Ethernet service Packet Delivery: A credit equal to 3/30 of the monthly recurring charges for all the rate elements[2] associated with the affected Metro Ethernet Connection.

Note 1: Details of the technical measurements and performance results methodologies for each commitment are provided in BellSouth Technical Reference TR-73632.

Note 2: Specifically, rate elements for the Metro Ethernet Connection, Additional Mileage and Features.

All BellSouth marks contained herein and as set forth in the trademarks and service marks section of the BellSouth Tariffs are owned by BellSouth Intellectual Property Corporation.

E7. SPECIAL ACCESS (A.K.A. BELLSOUTH SPA) SERVICE

E7.4 Rate Regulations (Cont'd)

E7.4.32 BellSouth Metro Ethernet Service (Cont'd)

D. Service Level Agreement for Virtual BellSouth Metro Ethernet service[1] (Cont'd)

4. SLA Credits for Virtual Connections with ***CNM*** **-** Metro Ethernet Reporting (Cont'd) (T)

The SLA credit amount will be determined by applying the credits outlined preceding to the rate elements or total billed revenues specified following:

The total credits issued for all SLAs for a specific BellSouth Metro Ethernet service Connection during a single bill period may not exceed the total monthly recurring charges billed for all the rate elements associated with that BellSouth Metro Ethernet service Connection. Credits are not provided for partial month service.

(a) BellSouth Metro Ethernet Service Time-To-Repair Credit – The Service Level Commitment measurement will be based on each individual trouble ticket for a customer's connection. Multiple trouble tickets on the same day for the same customer connection will only be eligible for one time-to-repair credit. The SLA credit will apply to the monthly recurring charges for all the rate elements[2] associated with the affected Metro Ethernet Connection

(b) BellSouth Metro Ethernet Service Network Availability Credit[3] – The Service Level Commitment measurement will be based on a specific calendar month's performance. The credit will apply for each BellSouth Metro Ethernet Service Connection that does not meet the availability commitment. The SLA credit will apply to the monthly recurring charges for all the rate elements[2] associated with the affected Metro Ethernet Connection.

(c) BellSouth Metro Ethernet Service Latency Credit[3] – The Service Level Commitment measurement will be based on a specific calendar month's performance. The credit will apply for each BellSouth Metro Ethernet Service Connection that does not meet the latency Commitment for any eligible CoS. The SLA credit will apply to the monthly recurring charges for all the rate elements[2] associated with the affected Metro Ethernet Connection.

(d) BellSouth Metro Ethernet Service Jitter Credit[3] – The Service Level Commitment measurement will be based on a specific calendar month's performance. The credit will apply for each BellSouth Metro Ethernet Service Connection that does not meet the jitter Commitment for any eligible CoS. The SLA credit will apply to the monthly recurring charges for all the rate elements[2] associated with the affected Metro Ethernet Connection.

(e) BellSouth Metro Ethernet Service Packet Delivery Credit[3] – The Service Level Commitment measurement will be based on a specific calendar month's performance. The credit will apply for each BellSouth Metro Ethernet Service Connection that does not meet the packet delivery commitment for any eligible CoS. The SLA credit will apply to the monthly recurring charges for all the rate elements[2] associated with the affected Metro Ethernet Connection.

Note 1: Details of the technical measurements and performance results methodologies for each commitment are provided in BellSouth Technical Reference TR-73632.

Note 2: Specifically, rate elements for the Metro Ethernet Connection, Additional Mileage and Features.

Note 3: BellSouth Metro Ethernet networks that do not span more than one switch in the core network are not eligible for credits under this SLA.

All BellSouth marks contained herein and as set forth in the trademarks and service marks section of the BellSouth Tariffs are owned by BellSouth Intellectual Property Corporation.

E7. SPECIAL ACCESS (A.K.A. BELLSOUTH SPA) SERVICE

E7.5 Rates And Charges

E7.5.1 Reserved for Future Use

E7.5.2 Telegraph Grade (a.k.a. BellSouth SPA Telegraph) Service[1]

A. Local Channel

1. Per Point of Termination

		Monthly Rate	Nonrecurring Charge	USOC	(T)
(a)	Two-Wire	*$24.00*	$-	T6E2X	(I)(T)
(b)	Four-Wire	*48.00*	-	T6E4X	(I)(T)

B. Interoffice Channel

1. Mileage Bands

		Fixed Monthly Charge	Monthly Charge Per Mile	Nonrecurring Charge	USOC	(T)
(a)	0 miles	$-	$-	$-	1L5XX	(T)
(b)	1 thru 8 miles	*60.00*	*2.46*	-	1L5XX	(I)(T)
(c)	9 thru 25 miles	*60.00*	*2.40*	-	1L5XX	(I)(T)
(d)	Over 25 miles	*60.00*	*2.34*	-	1L5XX	(I)(T)

Note 1: Telegraph Grade (a.k.a. BellSouth SPA Telegraph) service is not available for additions, new installations or moves of service.

E7. SPECIAL ACCESS (A.K.A. BELLSOUTH SPA) SERVICE

E7.5 Rates And Charges (Cont'd)

E7.5.2 Telegraph Grade (a.k.a. BellSouth SPA Telegraph) Service[1] (Cont'd)

C. Optional Features and Functions

1. Telegraph Bridging

	Monthly Rate	Nonrecurring Charge	USOC	(T)
(a) Two-Wire, per port	*$3.60*	$-	BCNT2	(I)(T)
(b) Four-Wire, per port	*3.60*	-	BCNT4	(I)(T)

E7.5.3 Voice Grade (a.k.a. BellSouth SPA DS0 VG) Service

A. Local Channel

1. Per Point of Termination

a. Voice Grade (a.k.a. BellSouth SPA DS0 VG)

(1) Voice

	Monthly Rate	Nonrecurring Charge First	Nonrecurring Charge Additional	USOC	(T)
(a) Two-Wire	*$42.00*	*$330.00*	*$132.00*	T6E2X	(I)(T)
(b) Four-Wire	*66.00*	*336.00*	*138.00*	T6E4X	(I)(T)
(2) Data					
(a) Two-Wire	*48.00*	*360.00*	*150.00*	T6E2X	(I)(T)
(b) Four-Wire	*72.00*	*372.00*	*162.00*	T6E4X	(I)(T)
(3) Loop Facilities Not Required[2]					
(a) Two-Wire	*12.00*	*174.00*	*97.20*	EUC2N	(I)(T)
(b) Four-Wire	*12.00*	*174.00*	*97.20*	EUC4N	(I)(T)

B. Interoffice Channel

1. Mileage Bands

	Fixed Monthly Charge	Monthly Charge Per Mile	Nonrecurring Charge	USOC	(T)
(a) 0 mile	$-	$-	$-	1L5XX	(T)
(b) 1 thru 8 miles	*72.00*	*2.88*	*120.00*	1L5XX	(I)(T)
(c) 9 thru 25 miles	*72.00*	*2.88*	*120.00*	1L5XX	(I)(T)
(d) Over 25 miles	*72.00*	*2.88*	*120.00*	1L5XX	(I)(T)

Note 1: Telegraph Grade (a.k.a. BellSouth SPA Telegraph) service is not available for additions, new installations or moves of service.

Note 2: For connections to Company Centrex Type Services Switches and Equipment considered to be end user premises.

E7. SPECIAL ACCESS (A.K.A. BELLSOUTH SPA) SERVICE

E7.5 Rates And Charges (Cont'd)

E7.5.3 Voice Grade (a.k.a. BellSouth SPA DS0 VG) Service (Cont'd)

C. Optional Features and Functions

1. Bridging

a. Voice Bridging

(1) Per port

	Monthly Rate	Nonrecurring Charge	USOC	(T)
(a) Two-Wire	***$14.40***	***$50.40***	**BCNV2**	(I)(T)
(b) Four-Wire	***16.80***	***50.40***	**BCNV4**	(I)(T)

b. Data Bridging

(1) Per port

(a) Two-Wire	***24.00***	***54.00***	**BCND2**	(I)(T)
(b) Four-Wire	***24.00***	***54.00***	**BCND4**	(I)(T)

c. Telephoto Bridging

(1) Per port

(a) Two-Wire	***14.40***	***50.40***	**BCNF2**	(I)(T)
(b) Four-Wire	***16.80***	***50.40***	**BCNF4**	(I)(T)

E7. SPECIAL ACCESS (A.K.A. BELLSOUTH SPA) SERVICE

E7.5 Rates And Charges (Cont'd)

E7.5.3 Voice Grade (a.k.a. BellSouth SPA DS0 VG) Service (Cont'd)

C. Optional Features and Functions (Cont'd)

2. Conditioning, Per Point of Termination

	Monthly Rate	Nonrecurring Charge Initial	Nonrecurring Charge Subsequent	USOC	(T)
(a) C-Type	*$3.60*	*$18.00*	*$112.80*	**X1CPT**	(I)(T)
(b) Improved Attenuation Distortion	*102.00*	*98.40*	*204.00*	**UHW**	(I)(T)
(c) Improved Envelope Delay Distortion	*144.00*	*98.40*	*204.00*	**UHY**	(I)(T)
(d) Sealing Current	*1.20*	*49.20*	*138.00*	**1HBPT**	(I)(T)

3. Echo Control For Effective Two-Wire Service

(1) Per Point of Termination

(a) Improved Return Loss at the Two-Wire Point of Termination	*24.00*	*8.40*	*342.00*	**1RL2W**	(I)(T)
(b) ELEPL2 at the Four-Wire Point of Termination	*24.00*	*8.40*	*342.00*	**UHZ**	(I)(T)

4. Customer Specified Receive Level

(a) Per two-wire Point of Termination	*24.00*	*3.60*	*98.40*	**RLS**	(I)(T)

E7. SPECIAL ACCESS (A.K.A. BELLSOUTH SPA) SERVICE

E7.5 Rates And Charges (Cont'd)

E7.5.3 Voice Grade (a.k.a. BellSouth SPA DS0 VG) Service (Cont'd)

C. Optional Features and Functions (Cont'd)

5. D-Conditioning

	Monthly Rate	Nonrecurring Charge Initial	Nonrecurring Charge Subsequent	USOC	(T)
(a) Per Point of Termination	*$3.60*	*$10.80*	*$378.00*	**XDCPT**	(I)(T)
6. Telephoto Conditioning					
(a) Per Point of Termination	*3.60*	*3.60*	*336.00*	**XTCPT**	(I)(T)
7. Signaling Capability, per Point of Termination					
(a) Loop[1]	*7.20*	*20.40*	*354.00*	**XSS++**	(I)(T)
(b) Single Frequency	*8.40*	*31.20*	*366.00*	**XSSSF**	(I)(T)
(c) E&M[2]	*12.00*	*32.40*	*366.00*	**XSS++**	(I)(T)
(d) Ground[3]	*7.20*	*13.20*	*348.00*	**XSS++**	(I)(T)
(e) Type C	*3.60*	*19.20*	*354.00*	**XSSLC**	(I)(T)
(f) Other[4]	*7.20*	*25.20*	*360.00*	**XSS++**	(I)(T)
8. Improved Termination					
(a) Per Point of Termination	*3.60*	*3.60*	*342.00*	**UGD**	(I)(T)
9. Simplex Reversal					
(a) Per Point of Termination	-	*3.60*	*115.20*	**UGJ**	(I)(T)

Note 1: In lieu of ++ substitute LO or LS as appropriate.

Note 2: In lieu of ++ substitute EA, EB, EC or CT as appropriate.

Note 3: In lieu of ++ substitute GO or GS as appropriate.

Note 4: In lieu of ++ substitute LA, LB, LR, RV, DX, DY, EX, AB or AC as appropriate.

E7. SPECIAL ACCESS (A.K.A. BELLSOUTH SPA) SERVICE

E7.5 Rates And Charges (Cont'd)

E7.5.3 Voice Grade (a.k.a. BellSouth SPA DS0 VG) Service (Cont'd)

(T)

D. WATS Access Line (a.k.a. BellSouth SPA WATS Line)

The following apply to a WATS Access Line (a.k.a. BellSouth SPA WATS Line) used for interLATA only calling. Rates for all other WATS Access Lines (a.k.a. BellSouth SPA WATS Line) (i.e., combined interLATA/intraLATA calling) are found in the General Subscriber Service Tariff, Section A19.

1. Two-Wire/Four-Wire WATS Access Line (a.k.a. BellSouth SPA WATS Line)

a. Local Channels

(1) Per Point of Termination

		Monthly Rate	Nonrecurring Charge First	Nonrecurring Charge Additional	USOC	(T)
(a)	Per Two-Wire Line	*$42.00*	*$330.00*	*$132.00*	**X2W**	(I)(T)
(b)	Per Two-Wire Line[1]	*42.00*	*330.00*	*132.00*	**X2L**	(I)(T)
(c)	Per Four-Wire Line	*66.00*	*336.00*	*138.00*	**X4W**	(I)(T)
(d)	Per Four-Wire Line[1]	*66.00*	*336.00*	*138.00*	**X4L**	(I)(T)

Note 1: For use with Direct Inward Dial (DID) or DID/DOD Access Service with BellSouth SWA Basic Serving Arrangement for use with Dedicated Access Lines described in E6.3.5.A. and provided in E6.8.3.A.6. of this Tariff.

E7. SPECIAL ACCESS (A.K.A. BELLSOUTH SPA) SERVICE

E7.5 Rates And Charges (Cont'd)

E7.5.3 Voice Grade (a.k.a. BellSouth SPA DS0 VG) Service (Cont'd)

D. WATS Access Line (a.k.a. BellSouth SPA WATS Line) (Cont'd)

2. Interoffice Channel

a. Mileage Bands

(1) Fixed Rate

	Fixed Monthly Charge	Monthly Charge Per Mile	Nonrecurring Charge	USOC	
(a) 0 mile	$-	$-	$-	1LFFX	(T)
(b) 1 thru 8 miles	*72.00*	*2.88*	*120.00*	1LFFX	(I)(T)
(c) 9 thru 25 miles	*72.00*	*2.88*	*120.00*	1LFFX	(I)(T)
(d) Over 25 miles	*72.00*	*2.88*	*120.00*	1LFFX	(I)(T)

3. Optional Features

a. Improved Two-Wire Voice Transmission Specifications

(1) For WATS Access Line (a.k.a. BellSouth SPA WATS Line)

	Monthly Rate	Nonrecurring Charge Initial	Nonrecurring Charge Subsequent	USOC	
(a) Two-Wire	*$24.00*	*$46.80*	*$105.60*	X2T	(I)(T)

b. WATS Access Line Bridging

(1) Per port

	Monthly Rate	Nonrecurring Charge	USOC	
(a) Two-Wire	*$14.40*	*$50.40*	BCNV2	(I)(T)
(b) Four-Wire	*16.80*	*50.40*	BCNV4	(I)(T)

E7.5.4 Wired Music Service

A. Local Channel

1. Per Point of Termination

	Monthly Rate	Nonrecurring Charge First	Nonrecurring Charge Additional	USOC	
(a) 200 to 3500 Hz	*$42.00*	*$624.00*	*$270.00*	T6ECS	(I)(T)
(b) 100 to 5000 Hz	*54.00*	*726.00*	*354.00*	T6ECS	(I)(T)
(c) 50 to 8000 Hz	*60.00*	*744.00*	*372.00*	T6ECS	(I)(T)

E7. SPECIAL ACCESS (A.K.A. BELLSOUTH SPA) SERVICE

E7.5 Rates And Charges (Cont'd)

E7.5.4 Wired Music Service (Cont'd)

B. Interoffice Channel

1. 200 to 3500 Hz

Mileage Bands

	Fixed Monthly Charge	Monthly Charge Per Mile	Nonrecurring Charge	USOC	(T)
(a) 0 mile	$-	$-	$-	1L5XX	(T)
(b) 1 thru 8 miles	*60.00*	*2.46*	*99.60*	1L5XX	(I)(T)
(c) 9 thru 25 miles	*60.00*	*2.40*	*99.60*	1L5XX	(I)(T)
(d) Over 25 miles	*60.00*	*2.34*	*99.60*	1L5XX	(I)(T)

2. 100 to 5000 Hz

Mileage Bands

(a) 0 mile	-	-	-	1L5XX	(T)
(b) 1 thru 8 miles	*60.00*	*4.92*	*90.00*	1L5XX	(I)(T)
(c) 9 thru 25 miles	*60.00*	*4.80*	*90.00*	1L5XX	(I)(T)
(d) Over 25 miles	*60.00*	*4.68*	*90.00*	1L5XX	(I)(T)

3. 50 to 8000 Hz

Mileage Bands

(a) 0 mile	-	-	-	1L5XX	(T)
(b) 1 thru 8 miles	*84.00*	*7.38*	*90.00*	1L5XX	(I)(T)
(c) 9 thru 25 miles	*84.00*	*7.20*	*90.00*	1L5XX	(I)(T)
(d) Over 25 miles	*84.00*	*7.02*	*90.00*	1L5XX	(I)(T)

C. Optional Features and Functions

1. Bridging, Distribution Amplifier

	Monthly Rate	Nonrecurring Charge	USOC	(T)
(a) Per port	*$2.40*	*$45.60*	BCNPT	(I)(T)

2. Gain Conditioning

	Monthly Rate	Nonrecurring Charge Initial	Nonrecurring Charge Subsequent	USOC	(T)
(a) Per service	$-	*$25.20*	*$64.80*	XGC	(I)(T)

E7. SPECIAL ACCESS (A.K.A. BELLSOUTH SPA) SERVICE

E7.5 Rates And Charges (Cont'd)

E7.5.5 Digital Data Access (a.k.a. BellSouth SPA DS0 Digital Data) Service

A. Local Channel

1. Per Point of Termination

(D)

	Monthly Rate	24 to 42 Months	43 to 60 Months	Nonrecurring Charge First	Add'l	USOC	
(a) 2.4 Kbps	**$55.00**	**$49.00**	**$47.00**	**$415.00**	**$135.00**	**T6ECS**	(C)
(b) 4.8 Kbps	**55.00**	**49.00**	**47.00**	**415.00**	**135.00**	**T6ECS**	(C)
(c) 9.6 Kbps	**55.00**	**49.00**	**47.00**	**415.00**	**135.00**	**T6ECS**	(C)
(d) 19.2 Kbps	**55.00**	**49.00**	**47.00**	**415.00**	**135.00**	**T6ECS**	(C)
(e) 56.0 Kbps	**75.00**	**65.00**	**60.00**	**415.00**	**135.00**	**T6ECS**	(C)
(f) 64.0 Kbps	**75.00**	**65.00**	**60.00**	**415.00**	**135.00**	**T6ECS**	(C)
2. Hub Termination, per Local Channel							
(a) 2.4 Kbps	**12.00**	**11.75**	**11.50**	**61.00**	**41.00**	**TUTA4**	(C)
(b) 4.8 Kbps	**12.00**	**11.75**	**11.50**	**61.00**	**41.00**	**TUTB4**	(C)
(c) 9.6 Kbps	**12.00**	**11.75**	**11.50**	**61.00**	**41.00**	**TUTC4**	(C)
(d) 19.2 Kbps	**12.00**	**11.75**	**11.50**	**61.00**	**41.00**	**TUTE4**	(C)
(e) 56.0 Kbps	**30.00**	**28.00**	**26.00**	**61.00**	**41.00**	**TUTD4**	(C)
(f) 64.0 Kbps	**30.00**	**28.00**	**26.00**	**61.00**	**41.00**	**TUTF4**	(C)

B. Interoffice Channel

1. Fixed monthly rates, each channel 0 miles

(D)

	Monthly Rate	24 to 42 Months	43 to 60 Months	Nonrecurring Charge First	Add'l	USOC	
(a) 2.4, 4.8, 9.6 and 19.2 Kbps	**$-**	**$-**	**$-**	**$-**	**$-**	**1L5XX**	(C)
(b) 56.0 and 64.0 Kbps	**-**	**-**	**-**	**-**	**-**	**1L5XX**	(C)
2. Each mile or fraction thereof, each channel 0 miles							
(a) 2.4, 4.8, 9.6 and 19.2 Kbps	**-**	**-**	**-**	**-**	**-**	**1L5XX**	(C)
(b) 56.0 and 64.0 Kbps	**-**	**-**	**-**	**-**	**-**	**1L5XX**	(C)
3. Fixed monthly rates, each channel 1-8 miles							
(a) 2.4, 4.8, 9.6 and 19.2 Kbps	**20.00**	**19.50**	**19.00**	**66.00**		**1L5XX**	(C)
(b) 56.0 and 64.0 Kbps	**40.00**	**36.00**	**34.00**	**66.00**		**1L5XX**	(C)
4. Each mile or fraction thereof, each channel 1-8 miles							
(a) 2.4, 4.8, 9.6 and 19.2 Kbps	**2.05**	**1.90**	**1.75**	**-**		**1L5XX**	(C)
(b) 56.0 and 64.0 Kbps	**4.10**	**3.80**	**3.10**	**-**		**1L5XX**	(C)
5. Fixed monthly rates, each channel 9-25 miles							
(a) 2.4, 4.8, 9.6 and 19.2 Kbps	**20.00**	**19.50**	**19.00**	**66.00**		**1L5XX**	(C)
(b) 56.0 and 64.0 Kbps	**40.00**	**36.00**	**34.00**	**66.00**		**1L5XX**	(C)

E7. SPECIAL ACCESS (A.K.A.BELLSOUTH SPA) SERVICE

E7.5 Rates And Charges (Cont'd)

E7.5.5 Digital Data Access (a.k.a. BellSouth SPA DS0 Digital Data) Service (Cont'd)

B. Interoffice Channel (Cont'd)

6. Each mile or fraction thereof, 9-25 miles

(D)

	Monthly Rate	24 to 42 Months	43 to 60 Months	Nonrecurring Charge	USOC	
						(C)
(a) 2.4, 4.8, 9.6 and 19.2 Kbps	**$2.00**	**$1.85**	**$1.70**	**$-**	**1L5XX**	(C)
(b) 56.0 and 64.0 Kbps	**4.00**	**3.70**	**3.00**	**-**	**1L5XX**	(C)
7. Fixed monthly rates, each channel over 25 miles						
(a) 2.4, 4.8, 9.6 and 19.2 Kbps	**20.00**	**19.50**	**19.00**	**66.00**	**1L5XX**	(C)
(b) 56.0 and 64.0 Kbps	**40.00**	**36.00**	**34.00**	**66.00**	**1L5XX**	(C)

E7. SPECIAL ACCESS (A.K.A. BELLSOUTH SPA) SERVICE

E7.5 Rates And Charges (Cont'd)

E7.5.5 Digital Data Access (a.k.a. BellSouth SPA DS0 Digital Data) Service (Cont'd)

B. Interoffice Channel (Cont'd)

8. Each mile or fraction thereof, each channel over 25 miles

(D)

	Monthly Rate	24 to 42 Months	43 to 60 Months	Nonrecurring Charge	USOC	(C) (C)
(a) 2.4, 4.8, 9.6 and 19.2 Kbps	**$1.95**	**$1.80**	**$1.65**	**$-**	**1L5XX**	(C)
(b) 56.0 and 64.0 Kbps	**3.90**	**3.60**	**2.90**	**-**	**1L5XX**	(C)

C. Optional Features and Functions

1. Bridging[1,2]

(a) Per Port	**25.00**	**24.00**	**22.00**	**23.00**	**BCNDA**	(C)

2. Digital Data Secondary Channel Capability, per Local Channel[1,2]

(D)

	Monthly Rate	24 to 42 Months	43 to 60 Months	Nonrecurring Charge Initial	Nonrecurring Charge Subsequent	USOC	(C) (C) (C)
(a) Each	**$15.00**	**$14.00**	**$13.00**	**$-**	**$240.00**	**SFS**	(C)

Note 1: Not available at all service locations

Note 2: This option is not available with 64.0 Kbps.

E7. SPECIAL ACCESS SERVICE

E7.5 Rates And Charges (Cont'd)

E7.5.5 Digital Data Access Service (Cont'd)

C. Optional Features and Functions (Cont'd)

3. Data Over Voice Channel, per local channel

(D)

	Monthly Rate	24 to 43 Months	43 to 60 Months	Nonrecurring Charge	USOC	
						(C)
(a) 9.6 Kbps[1,2,3]	**$33.00**	**$30.00**	**$28.00**	**$620.00**	**DDVJE**	(C)

4. Speed Change Charge[4]

	Nonrecurring Charge First	Nonrecurring Charge Additional	USOC
(a) Per Local Channel	**$330.00**	**$170.00**	**SCH**

E7.5.6 High Capacity Service

A. Local Channel

1. Per Point of Termination - 1.544 Mbps

	Monthly Rate SEE CURRENT PRICE LIST Minimum	Monthly Rate SEE CURRENT PRICE LIST Maximum	Nonrecurring Charge First	Nonrecurring Charge Additional	USOC
(a) Rate Zone 1	**$120.00**	**$200.00**	**$675.00**	**$310.00**	**TMECS**
(b) Rate Zone 2	**120.00**	**200.00**	**675.00**	**310.00**	**TMECS**
(c) Rate Zone 3	**120.00**	**200.00**	**675.00**	**310.00**	**TMECS**

2. Per Point of Termination

(a) 3.152 Mbps[5]	-	-	-	-	**TWT++**
(b) 6.312 Mbps[5]	-	-	-	-	**TWT++**
(c) 44.736 Mbps[5]	-	-	-	-	**TWT++**

Note 1: Not available at all service locations.

Note 2: This option may be used in lieu of a 9.6 Kbps Digital Local Channel in E7.5.7.A. following. All other Digital Data Service rate elements apply as appropriate.

Note 3: Secondary Channel Capability cannot be provided when this option is used.

Note 4: Speed Change Charge is applicable where circuit out of service time during speed change activity is acceptable to customer.

Note 5: ICB rates and charges apply.

E7. SPECIAL ACCESS SERVICE

E7.5 Rates And Charges (Cont'd)

E7.5.6 High Capacity Service (Cont'd)

A. Local Channel (Cont'd)

3. Contract Rates Per Point of Termination[1] (T)

a. 1.544 Mbps (N)

(1) Rate Zone 1 (N)

	Monthly Rate SEE CURRENT PRICE LIST		Nonrecurring Charge			
	Minimum	**Maximum**	**First**	**Additional**	**USOC**	
(a) 24 to 48 months	**$110.00**	**$190.00**	**$675.00**	**$310.00**	**TMECS**	(C)
(b) 49 to 72 months	**110.00**	**190.00**	**675.00**	**310.00**	**TMECS**	(C)
(c) 73 to 96 months	**110.00**	**190.00**	**675.00**	**310.00**	**TMECS**	(C)
(2) Rate Zone 2						(N)
(a) 24 to 48 months	**110.00**	**190.00**	**675.00**	**310.00**	**TMECS**	(N)
(b) 49 to 72 months	**110.00**	**190.00**	**675.00**	**310.00**	**TMECS**	(N)
(c) 73 to 96 months	**110.00**	**190.00**	**675.00**	**310.00**	**TMECS**	(N)
(3) Rate Zone 3						(N)
(a) 24 to 48 months	**110.00**	**190.00**	**675.00**	**310.00**	**TMECS**	(N)
(b) 49 to 72 months	**110.00**	**190.00**	**675.00**	**310.00**	**TMECS**	(N)
(c) 73 to 96 months	**110.00**	**190.00**	**675.00**	**310.00**	**TMECS**	(N)

Note 1: Contract lengths are now flexible to allow customer choice of payment period per E2.4.9.

E7. SPECIAL ACCESS (A.K.A. BELLSOUTH SPA) SERVICE (T)

E7.5 Rates And Charges (Cont'd)

E7.5.6 High Capacity *(a.k.a. BellSouth SPA High Capacity)* Service (Cont'd) (T)

B. Interoffice Channel

1. 1.544 Mbps

a. Monthly Rates (SEE CURRENT PRICE LIST)1

	Fixed Monthly Rate			Monthly Rate Per Mile			Nonrecurring Charge	
	Rate Zone 1	Rate Zone 2	Rate Zone 3	Rate Zone 1	Rate Zone 2	Rate Zone 3	Per Channel	USOC
(1) 0 Mile								
(a) Per channel	$-	$-	$-	$-	$-	$-	$-	NA
(b) Minimum	-	-	-	-	-	-	-	1L5XX
(c) Maximum	-	-	-	-	-	-	-	1L5XX
(2) 1 thru 8 Miles								
(a) Per channel	-	-	-	-	-	-	255.00	NA
(b) Minimum	60.00	60.00	60.00	30.00	30.00	30.00	-	1L5XX
(c) Maximum	72.00	72.00	72.00	37.00	37.00	37.00	-	1L5XX
(3) 9 thru 25 Miles								
(a) Per channel	-	-	-	-	-	-	255.00	NA
(b) Minimum	60.00	60.00	60.00	30.00	30.00	30.00	-	1L5XX
(c) Maximum	77.00	77.00	77.00	36.00	36.00	36.00	-	1L5XX
(4) Over 25 Miles								
(a) Per channel	-	-	-	-	-	-	255.00	NA
(b) Minimum	60.00	60.00	60.00	30.00	30.00	30.00	-	1L5XX
(c) Maximum	95.00	95.00	95.00	35.00	35.00	35.00	-	1L5XX

b. 24 to 48 Month Contract Rates (SEE CURRENT PRICE LIST)1

(1) 0 Mile								
(a) Per channel	-	-	-	-	-	-	255.00	NA
(b) Minimum	-	-	-	-	-	-	-	1L5XX
(c) Maximum	-	-	-	-	-	-	-	1L5XX
(2) 1 thru 8 Miles								
(a) Per channel	-	-	-	-	-	-	255.00	NA
(b) Minimum	65.00	65.00	65.00	25.00	25.00	25.00	-	1L5XX
(c) Maximum	72.00	72.00	72.00	34.00	34.00	34.00	-	1L5XX
(3) 9 thru 25 Miles								
(a) Per channel	-	-	-	-	-	-	255.00	NA
(b) Minimum	65.00	65.00	65.00	25.00	25.00	25.00	-	1L5XX
(c) Maximum	77.00	77.00	77.00	32.00	32.00	32.00	-	1L5XX

Note 1: Contract lengths are now flexible to allow customer choice of payment period per E2.4.9.

E7. SPECIAL ACCESS (A.K.A. BELLSOUTH SPA) SERVICE (T)

E7.5 Rates And Charges (Cont'd)

E7.5.6 High Capacity (a.k.a. BellSouth SPA High Capacity) Service (Cont'd) (T)

B. Interoffice Channel (Cont'd)

1. 1.544 Mbps (Cont'd)

b. 24 to 48 Month Contract Rates **(SEE CURRENT PRICE LIST)**[1] (Cont'd)

(4) Over 25 Miles

	Fixed Monthly Rate Rate Zone 1	Fixed Monthly Rate Rate Zone 2	Fixed Monthly Rate Rate Zone 3	Monthly Rate Per Mile Rate Zone 1	Monthly Rate Per Mile Rate Zone 2	Monthly Rate Per Mile Rate Zone 3	Nonrecurring Charge Per Channel	USOC
(a) Per channel	$-	$-	$-	$-	$-	$-	$255.00	NA
(b) Minimum	65.00	65.00	65.00	25.00	25.00	25.00	-	1L5XX
(c) Maximum	95.00	95.00	95.00	30.00	30.00	30.00	-	1L5XX

c. 49 to 72 Month Contract Rates **(SEE CURRENT PRICE LIST)**[1]

(1) 0 Mile

(a) Per channel	-	-	-	-	-	-	-	NA
(b) Minimum	-	-	-	-	-	-	-	1L5XX
(c) Maximum	-	-	-	-	-	-	-	1L5XX

(2) 1 thru 8 Miles

(a) Per channel	-	-	-	-	-	-	255.00	NA
(b) Minimum	65.00	65.00	65.00	23.00	23.00	23.00	-	1L5XX
(c) Maximum	72.00	72.00	72.00	32.00	32.00	32.00	-	1L5XX

(3) 9 thru 25 Miles

(a) Per channel	-	-	-	-	-	-	255.00	NA
(b) Minimum	65.00	65.00	65.00	23.00	23.00	23.00	-	1L5XX
(c) Maximum	77.00	77.00	77.00	30.00	30.00	30.00	-	1L5XX

(4) Over 25 Miles

(a) Per channel	-	-	-	-	-	-	255.00	NA
(b) Minimum	65.00	65.00	65.00	23.00	23.00	23.00	-	1L5XX
(c) Maximum	95.00	95.00	95.00	28.00	28.00	28.00	-	1L5XX

d. 73 to 96 Month Contract Rates **(SEE CURRENT PRICE LIST)**[1]

(1) 0 Mile

(a) Per channel	-	-	-	-	-	-	-	NA
(b) Minimum	-	-	-	-	-	-	-	1L5XX
(c) Maximum	-	-	-	-	-	-	-	1L5XX

(2) 1 thru 8 Miles

(a) Per channel	-	-	-	-	-	-	255.00	NA
(b) Minimum	65.00	65.00	65.00	21.00	21.00	21.00	-	1L5XX
(c) Maximum	72.00	72.00	72.00	30.00	30.00	30.00	-	1L5XX

Note 1: Contract lengths are now flexible to allow customer choice of payment period per E2.4.9.

E7. SPECIAL ACCESS (A.K.A. BELLSOUTH SPA) SERVICE (T)

E7.5 Rates And Charges (Cont'd)

E7.5.6 High Capacity (a.k.a. BellSouth SPA High Capacity) Service (Cont'd) (T)

B. Interoffice Channel (Cont'd) ***(a.k.a. BellSouth SPA High Capacity)*** (T)

1. 1.544 Mbps (Cont'd)

d. 73 to 96 Month Contract Rates **(SEE CURRENT PRICE LIST)**[1] (Cont'd)

(3) 9 thru 25 Miles

	Fixed Monthly Rate			Monthly Rate Per Mile			Nonrecurring Charge	
	Rate Zone 1	**Rate Zone 2**	**Rate Zone 3**	**Rate Zone 1**	**Rate Zone 2**	**Rate Zone 3**	**Per Channel**	**USOC**
(a) Per channel	**$-**	**$-**	**$-**	**$-**	**$-**	**$-**	**$255.00**	**NA**
(b) Minimum	**65.00**	**65.00**	**65.00**	**21.00**	**21.00**	**21.00**	**-**	**1L5XX**
(c) Maximum	**77.00**	**77.00**	**77.00**	**28.00**	**28.00**	**28.00**	**-**	**1L5XX**
(4) Over 25 Miles								
(a) Per channel	**-**	**-**	**-**	**-**	**-**	**-**	**255.00**	**NA**
(b) Minimum	**65.00**	**65.00**	**65.00**	**21.00**	**21.00**	**21.00**	**-**	**1L5XX**
(c) Maximum	**95.00**	**95.00**	**95.00**	**26.00**	**26.00**	**26.00**	**-**	**1L5XX**

Note 1: Contract lengths are now flexible to allow customer choice of payment period per E2.4.9.

E7. SPECIAL ACCESS (A.K.A. BELLSOUTH SPA) SERVICE (T)

E7.5 Rates And Charges (Cont'd)

E7.5.6 High Capacity (a.k.a. BellSouth SPA High Capacity) Service (Cont'd) (T)

B. Interoffice Channel (Cont'd)

2. 3.152 Mbps

Mileage Bands

		Fixed Monthly Charge		Monthly Charge Per Mile			
		SEE CURRENT PRICE LIST					
		Min.	Max.	Min.	Max.	Nonrecurring Charge	USOC
(a)	0 mile	$-	$-	$-	$-	$-	**1LOXX**
(b)	1 thru 8 miles[1]	-	-	-	-	-	**1LOXX**
(c)	9 thru 25 miles[1]	-	-	-	-	-	**1LOXX**
(d)	Over 25 miles[1]	-	-	-	-	-	**1LOXX**

3. 6.312 Mbps

Mileage Bands

(a)	0 mile	-	-	-	-	-	**1LOXX**
(b)	1 thru 8 miles[1]	-	-	-	-	-	**1LOXX**
(c)	9 thru 25 miles[1]	-	-	-	-	-	**1LOXX**
(d)	Over 25 miles[1]	-	-	-	-	-	**1LOXX**

4. 44.736 Mbps

Mileage Bands

(a)	0 mile	-	-	-	-	-	**1LOXX**
(b)	1 thru 8 miles[1]	-	-	-	-	-	**1LOXX**
(c)	9 thru 25 miles[1]	-	-	-	-	-	**1LOXX**
(d)	Over 25 miles[1]	-	-	-	-	-	**1LOXX**

Note 1: ICB rates and charges apply.

E7. SPECIAL ACCESS (A.K.A. BELLSOUTH SPA) SERVICE (T)

E7.5 Rates And Charges (Cont'd)

E7.5.6 High Capacity (a.k.a. BellSouth SPA High Capacity) Service (Cont'd) (T)

C. Optional Features and Functions

1. Channelization

	Nonrecurring Charge	Monthly Rate SEE CURRENT PRICE LIST Minimum	Maximum	USOC	
a. DS3 Channelization					(T)
(1) DS3 to DS1					
(a) Per arrangement[1]	**$-**	**$-**	**$-**	**MXB++**	
b. DS2 Channelization					(T)
(1) DS2 to DS1					
(a) Per arrangement[1]	**-**	**-**	**-**	**MXD++**	
c. DS1C Channelization					(T)
(1) DS1C to DS1					
(a) Per arrangement[1]	**-**	**-**	**-**	**MXH++**	
d. DS1 Channelization					(T)
(1) DS1 Basic Channelization System (DS1 to VG/DS0)					
(a) Rate Zone 1 - Per System	**130.00**	**158.00**	**263.00**	**MQ1**	
(b) Rate Zone 2 - Per System	**130.00**	**158.00**	**263.00**	**MQ1**	
(c) Rate Zone 3 - Per System	**130.00**	**158.00**	**263.00**	**MQ1**	
e. DS0 Channelization					(T)
(1) DS0 Basic Channelization System (DS0 to Subrates) (Per System)					
(a) Maximum of 20 2.4 Kbps services	**130.00**	**90.00**	**150.00**	**QSU24**	
(b) Maximum of 10 2.4 Kbps services	**130.00**	**90.00**	**150.00**	**QSU48**	
(c) Maximum of 5 9.6 Kbps services	**130.00**	**90.00**	**150.00**	**QSU96**	

Note 1: ICB rates and charges apply.

E7. SPECIAL ACCESS (A.K.A. BELLSOUTH SPA) SERVICE (T)

E7.5 Rates And Charges (Cont'd)

E7.5.6 High Capacity (a.k.a. BellSouth SPA High Capacity) Service (Cont'd) (T)

C. Optional Features and Functions (Cont'd)

2. Channel Interfaces (Per Interface)

a. Sub-DS3 Interfaces

DS1 Level Central Office Channel Interface

	Recurring Rate SEE CURRENT PRICE LIST Minimum	Maximum	Nonrecurring Charge	USOC
(1) Asynchronous				
(a) Month-To-Month	**$9.00**	**$15.00**	**$155.00**	**1D3CA**
(b) 24-48 Months	**6.00**	**10.00**	**155.00**	**1D3CA**
(c) 49-72 Months	**5.00**	**9.00**	**155.00**	**1D3CA**
(d) 73-96 Months	**4.00**	**8.00**	**155.00**	**1D3CA**
(2) Synchronous				
(a) Month-To-Month	**$27.00**	**$45.00**	**$130.00**	**1D3CS**
(b) 24-48 Months	**23.00**	**39.00**	**130.00**	**1D3CS**
(c) 49-72 Months	**21.00**	**35.00**	**130.00**	**1D3CS**
(d) 73-96 Months	**19.00**	**31.00**	**130.00**	**1D3CS**

b. Sub-DS3 Interfaces

DS1 Level Customer Channel Interface

(1) Asynchronous				
(a) Month-To-Month	**$13.00**	**$21.00**	**$310.00**	**1D3DA**
(b) 24-48 Months	**10.00**	**16.00**	**310.00**	**1D3DA**
(c) 49-72 Months	**10.00**	**16.00**	**310.00**	**1D3DA**
(d) 73-96 Months	**10.00**	**16.00**	**310.00**	**1D3DA**
(2) Synchronous				
(a) Month-To-Month	**$34.00**	**$56.00**	**$250.00**	**1D3DS**
(b) 24-48 Months	**27.00**	**45.00**	**250.00**	**1D3DS**
(c) 49-72 Months	**25.00**	**41.00**	**250.00**	**1D3DS**
(d) 73-96 Months	**23.00**	**38.00**	**250.00**	**1D3DS**

c. Sub-DS1 Interfaces

(1) VG/DS0 Level Central Office Channel Interface

	Recurring Rate SEE CURRENT PRICE LIST Minimum	Maximum	Nonrecurring Charge First	Additional	USOC	
(a) ***BellSouth SWA***	**$0.00**	**$0.00**	**$0.00**	**$0.00**	**1D1SW**	(T)
(b) Telegraph ***(a.k.a. BellSouth SPA Telegraph)***	**4.00**	**6.00**	**7.00**	**6.00**	**1D1TE**	(T)
(c) Voice Grade ***(a.k.a. BellSouth SPA DSO VG)***	**5.00**	**8.00**	**7.00**	**6.00**	**1D1VG**	(T)
(d) WATS Access Line ***(a.k.a. BellSouth SPA WATS Line)***	**5.00**	**8.00**	**7.00**	**6.00**	**1D1WT**	(T)
(e) Wired Music - monthly	**30.00**	**45.00**	**7.00**	**6.00**	**1D1PA**	
(f) Wired Music - daily	**3.00**	**5.00**	**7.00**	**6.00**	**1D1PA**	
(g) DDAS ***(a.k.a. BellSouth SPA DSO Digital Data)***	**11.00**	**16.00**	**7.00**	**6.00**	**1D1DD**	(T)

(M)

Material previously appearing on this page now appears on page(s) 45.2 of this section.

E7. SPECIAL ACCESS (A.K.A. BELLSOUTH SPA) SERVICE

E7.5 Rates And Charges (Cont'd)

E7.5.6 High Capacity (a.k.a. BellSouth SPA High Capacity) Service (Cont'd)

C. Optional Features and Functions (Cont'd)

2. Channel Interfaces (Per Interface) (Cont'd)

d. Sub-DS0 Interfaces

(1) Subrate Level Central Office Channel Interface

	Recurring Rate SEE CURRENT PRICE LIST		Nonrecurring Charge		
	Minimum	**Maximum**	**First**	**Additional**	**USOC**
(a) Subrate (2.4, 4.8, & 9.6 Kbps)	**$11.00**	**$16.00**	**$7.00**	**$6.00**	**1DOSR**
3. Automatic Loop Transfer					
(a) Per arrangement[1]	**160.00**	**193.00**	**15.00**	**48.00**	**T59**

4. Clear Channel Capability is furnished on a per DS1 service channel basis. Per DS1/1.544 Mbps High Capacity Channel optioned as:

	Monthly Rate	Nonrecurring Charge Initial	Subsequent	USOC
(a) Superframe Format (SF)	**$0.00**	**$-**	**$605.00**	**CCOSF**
(b) Extended Superframe Format (ESF)	**0.00**	**-**	**605.00**	**CCOEF**

5. **(DELETED)** (D)

Note 1: An additional Local Channel charge will apply whenever the spare line is provided as a leg to the customer premises. This feature may not be available with lines utilizing the Clear Channel Capability line code (B8ZS).

All BellSouth marks contained herein and as set forth in the trademarks and servicemarks section of this Tariff are owned by BellSouth Intellectual Property Corporation.

E7. SPECIAL ACCESS (A.K.A. BELLSOUTH SPA) SERVICE

E7.5 Rates And Charges (Cont'd)

E7.5.7 Message Station Equipment Recovery Charge

A. Message Station Equipment Recovery Charge

1. Per Special Access (a.k.a. BellSouth SPA) Surcharge Assessed

	Monthly Rate	USOC
(a) Each	**$3.55**	**UTM**

E7.5.8 Special Access (a.k.a. BellSouth SPA) Surcharge

A. Rates

1. Per Voice Grade Equivalent

(a) Each	**25.00**	**S25**

E7.5.9 Reserved for Future Use

E7.5.10 Reserved for Future Use

E7.5.11 Reserved for Future Use

E7.5.12 Reserved for Future Use

E7.5.13 Transfer of Service

A. Service Rearrangements

1. Special Access (a.k.a. BellSouth SPA) Circuits

	Nonrecurring Charge	USOC
(a) Per Billing Account Number	**$140.00**	**NRBPA**
(b) Per circuit	**7.00**	**NRBPC**

E7.5.14 (DELETED) (D)

E7. SPECIAL ACCESS (A.K.A. BELLSOUTH SPA) SERVICE

E7.5 Rates And Charges (Cont'd)

E7.5.14 (DELETED) (Cont'd) (D)

E7. SPECIAL ACCESS (A.K.A. BELLSOUTH SPA) SERVICE

E7.5 Rates And Charges (Cont'd)

E7.5.15 Derived Data Channel (a.k.a. BellSouth SPA Derived Data Channel) service

A. Local Channel

1. Derived Data Channel (a.k.a. BellSouth SPA Derived Data Channel)

	Nonrecurring Charge	Month To Month	24 to 42 Months	43 to 60 Months	USOC	
						(C)
(a) Per channel at 2.4 Kbps	**$450.00**	**$17.00**	**$13.50**	**$11.00**	**DAXPG**	(C)
2. DS0-B Interface						
(a) Per group of twenty channels at 2.4 Kbps each	**330.00**	**70.00**	**65.00**	**62.00**	**DAXP1**	(C)

B. Interoffice Channel

1. Per group of twenty channels at 2.4 Kbps each

(a) Fixed	**90.00**	**25.00**	**23.00**	**22.00**	**DAXPF**	(C)
(b) Per mile	**-**	**2.05**	**1.90**	**1.75**	**DAXPM**	(C)

E7.5.16 FlexServ Service (a.k.a. BellSouth SPA Customer Reconfiguration) (T)

A. Basic FlexServ service (a.k.a. BellSouth SPA Customer Reconfiguration) (T)

1. DS0 Channel Connections

	Nonrecurring Charge	Month To Month	24 to 48 Months	49 to 72 Months	73 to 96 Months	USOC	
(a) Voice Grade Type, per DS0 channel	**$35.00**	**$14.90**	**$13.70**	**$12.70**	**$11.90**	**DSLVA**	(T)
(b) Digital Type, per DS0 channel	**35.00**	**8.50**	**7.80**	**7.25**	**6.80**	**DSLDA**	(T)
2. DS1 Channel Connections							
(a) DS0 Switching, per DS1 channel	**125.00**	**110.00**	**100.00**	**92.00**	**85.00**	**DSL1A**	(T)
(b) DS1 Switching, per DS1 channel	**125.00**	**65.00**	**60.00**	**55.00**	**52.00**	**DSL1B**	(T)
(c) Surveillance - DS1 Level per DS1 channel	**125.00**	**65.00**	**60.00**	**55.00**	**52.00**	**DSL1S**	(N)
3. DS3 Channel Connections							(N)
(a) Surveillance - DS1 Level, per DS3 channel	**125.00**	**375.00**	**345.00**	**320.00**	**300.00**	**DSL3S**	(N)
(b) Surveillance - DS3 Level, per DS3 channel	**125.00**	**150.00**	**138.00**	**128.00**	**120.00**	**DSL3T**	(N)

B. FlexServ service (a.k.a. BellSouth SPA Customer Reconfiguration) Options (T)

1. Multipoint Bridging

(a) Voice Grade Connections, per bridging leg	**20.00**	**5.00**	**4.50**	**4.40**	**4.30**	**FSSFM**	(T)
(b) Multipoint Junction Unit, per 2.4, 4.8, 9.6 or 56 Kbps channel (must purchase in units of 5)	**15.00**	**6.00**	**5.25**	**5.00**	**4.75**	**FSSFJ**	(T)
(c) Multipoint Junction Unit, per 19.2 Kbps channel (must purchase in units of 5)	**15.00**	**9.45**	**8.90**	**8.40**	**7.90**	**FSSF9**	

All BellSouth marks contained herein and as set forth in the trademarks and servicemarks section of this Tariff are owned by BellSouth Intellectual Property Corporation.

E7. SPECIAL ACCESS (A.K.A. BELLSOUTH SPA) SERVICE

E7.5 Rates And Charges (Cont'd)

E7.5.16 FlexServ Service (a.k.a. BellSouth SPA Customer Reconfiguration) (Cont'd) (T)

B. FlexServ Service (a.k.a. BellSouth SPA Customer Reconfiguration) Options (Cont'd) (T)

2. Subrate Reconfiguration Capability

	Nonrecurring Charge	USOC
(a) Per DS0 equipped (DS0B)	$45.00	DSLSB

	Nonrecurring Charge	Month To Month	24 to 48 Months	49 to 72 Months	73 to 96 Months	USOC	
(b) 9.6 Kbps, per DS0A requires 5	$5.00	$8.75	$8.15	$7.60	$7.20	DSLS9	(T)
(c) 4.8 Kbps, per DS0A requires 10	5.00	7.40	6.80	6.30	5.95	DSLS4	(T)
(d) 2.4 Kbps, per DS0A requires 20	5.00	7.00	6.45	5.95	5.60	DSLS2	(T)

3. Additional Concurrent User Access

(a) Per Additional User Access	125.00	68.00	60.00	57.00	54.00	FSSFU

4. ***Additional*** User Identification Codes (T)

	Nonrecurring Charge	USOC
(a) Per Additional Code	$3.00	FSSFA

5. Additional Customer Training

(a) Per eight hour day of training after initial installation	450.00	FSSFT

6. Reconfiguration by Company Personnel

(a) Request for Company to perform reconfiguration activity	25.00	FSSRA

7. **(DELETED)** (D)

E7.5.17 Reserved for Future Use

All BellSouth marks contained herein and as set forth in the trademarks and servicemarks section of this Tariff are owned by BellSouth Intellectual Property Corporation.

E7. SPECIAL ACCESS (A.K.A BELLSOUTH SPA) SERVICE

E7.5 Rates and Charges (Cont'd)

E7.5.18 SMARTRing service (a.k.a BellSouth Dedicated Ring)

A. Self-healing Multi-nodal Alternate Route Topology Ring - Month-to-Month

1. Local Channel (All capacities except OC-1)

	Month-to-Month	Nonrecurring Charge	USOC
(a) Per Local Channel	-	$410.00	1HVXX
(b) Per Quarter Air Mile	$95.00	-	1HVXX

2. Alternate Central Office (All capacities except OC-1)

(a) Per Alternate C.O. Channel	-	440.00	1HAXX
(b) Per Quarter Air Mile	1,500.00	_	1HAXX

3. Interoffice Channel (All capacities except OC-1)

(a) Per Channel, except OC-192 and OC-192+ Capacity	-	130.00	1HXFX
(b) Fixed, OC-3 Capacity	50.00	-	1HXFX
(c) Fixed, OC-3+, OC-12, OC-48 or OC-48+ Capacity	175.00	-	1HXFX
(d) Fixed, OC-192 or OC-192+ Capacity	600.00	300.00	1HXFX
(e) Per Quarter Air Mile, OC-3 Capacity	45.00	-	1HXFX
(f) Per Quarter Air Mile, OC-3+, OC-12, OC-48 or OC-48+ Capacity	55.00	-	1HXFX
(g) Per Quarter Air Mile, OC-192 or OC-192+ Capacity	55.00	-	1HXFX

4. Internodal Channel (All capacities except OC-1)

(a) Per Internodal Channel, Same Wire Center Area, Per Quarter Air Mile	3,000.00	430.00	1HNXX
(b) Per Internodal Channel, Same Office Park/Campus Environment in Contiguous Serving Wire Center Areas, Per Quarter Air Mile	3,500.00	430.00	1HNZX

5. Customer Node (Per Customer Node)

(a) OC-1 Capacity	800.00	430.00	SHNC4
(b) OC-3 Capacity	2,200.00	460.00	SHNC3
(c) OC-3+ Capacity	3,000.00	460.00	SHNN5
(d) OC-12 Capacity	3,400.00	460.00	SHNC1
(e) OC-48 Capacity	5,800.00	460.00	SHNN8
(f) OC-48+ Capacity	6,500.00	460.00	SHNN9
(g) OC-192 Capacity	25,000.00	640.00	SHNN6
(h) OC-192+ Capacity	25,000.00	640.00	SHNN2

(M)

Material previously appearing on this page now appears on page(s) 46.4.1 of this section.

All BellSouth marks contained herein and as set forth in the trademarks and service marks section of the BellSouth Tariffs are owned by BellSouth Intellectual Property Corporation.

E7. SPECIAL ACCESS (A.K.A BELLSOUTH SPA) SERVICE

E7.5 Rates and Charges (Cont'd)

E7.5.18 SMARTRing service (a.k.a BellSouth Dedicated Ring) (T)

A. Self-healing Multi-nodal Alternate Route Topology Ring - Month-to-Month (Cont'd)

6. Customer Channel Interface (Per Customer Node) (M)

		Month-to-Month	Nonrecurring Charge	USOC	
(a)	Per DS1	**$35.00**	**$240.00**	**SHNBB**	(M)(T)
(b)	Per DS3	**170.00**	**105.00**	**SHNZT**	(M)
(c)	Per STS-1	**220.00**	**105.00**	**SHN13**	(M)
(d)	Per OC-1	**100.00**	**115.00**	**SHN1C**	(M)
(e)	Per OC-3, 2-Fiber	**240.00**	**110.00**	**SHN1D**	(M)
(f)	Per OC-3, 4-Fiber	**475.00**	**110.00**	**SHN15**	(M)
(g)	Per OC-12, 2-Fiber	**715.00**	**115.00**	**SHN1F**	(M)
(h)	Per OC-12, 4-Fiber	**1,430.00**	**115.00**	**SHN19**	(M)
(i)	Per OC-48, 2-Fiber	**1,600.00**	**640.00**	**SHN1A**	(M)
(j)	Per OC-48, 4-Fiber	**3,200.00**	**640.00**	**SHN1B**	(M)
(k)	Per 1000 Mbps	**740.00**	**540.00**	**SHN1K**	(M)
(l)	Per 100 Mbps (1 STS-1) BellSouth Metro Ethernet Backbone	**500.00**	**800.00**	**SHN1J**	(M)
(m)	Per 100 Mbps (3 STS-1) BellSouth Metro Ethernet Backbone	**540.00**	**800.00**	**SHN33**	(M)
(n)	Per 1000 Mbps BellSouth Metro Ethernet Backbone	**740.00**	**850.00**	**SHN34**	(M)
(o)	Per Fractional 1000 Mbps Metro Ethernet Backbone				(N)
	- 150 Mbps (3 STS-1)	**560.00**	**850.00**	**SHN35**	(N)
	- 300 Mbps (6 STS-1)	**600.00**	**850.00**	**SHN36**	(N)
	- 450 Mbps (9 STS-1)	**640.00**	**850.00**	**SHN37**	(N)
	- 600 Mbps (12 STS-1)	**700.00**	**850.00**	**SHN38**	(N)

7. Central Office Node (Per Central Office Node)

(a)	OC-1 Capacity	**$600.00**	**$420.00**	**SHNH4**	
(b)	OC-3 Capacity	**1,400.00**	**460.00**	**SHNH3**	
(c)	OC-3+ Capacity	**2,500.00**	**460.00**	**SHNH5**	
(d)	OC-12 Capacity	**2,600.00**	**460.00**	**SHNH1**	
(e)	OC-48 Capacity	**5,400.00**	**460.00**	**SHNH8**	
(f)	OC-48+ Capacity	**6,100.00**	**460.00**	**SHNH9**	
(g)	OC-192 Capacity	**25,000.00**	**640.00**	**SHNH7**	
(h)	OC-192+ Capacity	**25,000.00**	**640.00**	**SHNH6**	
(i)	OC-3 Shared Node Interconnection	**980.00**	**550.00**	**SHNHE**	(N)
(j)	OC-12 Shared Node Interconnection	**1,820.00**	**550.00**	**SHNHE**	(N)
(k)	OC-48 Shared Node Interconnection	**3,400.00**	**550.00**	**SHNHE**	(N)
(l)	OC-48+ Shared Node Interconnection	**3,840.00**	**550.00**	**SHNHE**	(N)

Material appearing on this page previously appeared on page(s) 46.4 of this section.

All BellSouth marks contained herein are owned by BellSouth Intellectual Property Corporation

E7. SPECIAL ACCESS (A.K.A BELLSOUTH SPA) SERVICE

E7.5 Rates and Charges (Cont'd)

E7.5.18 SMARTRing service (a.k.a BellSouth Dedicated Ring) (Cont'd)

A. Self-healing Multi-nodal Alternate Route Topology Ring - Month-to-Month (Cont'd)

8. Central Office Channel Interface (Per Central Office Node)

		Month-to-Month	Nonrecurring Charge	USOC	
(a)	Per DS1	**$35.00**	**$99.00**	**SHNCB**	
(b)	Per DS3	**115.00**	**150.00**	**SHNYT**	
(c)	Per STS-1	**150.00**	**160.00**	**SHNO2**	
(d)	Per OC-1	**100.00**	**170.00**	**SHNCC**	
(e)	Per OC-3, 2-Fiber	**240.00**	**100.00**	**SHNCD**	
(f)	Per OC-3, 4-Fiber	**425.00**	**100.00**	**SHNO4**	
(g)	Per OC-12, 2-Fiber	**640.00**	**100.00**	**SHNCF**	
(h)	Per OC-12, 4-Fiber	**1,280.00**	**100.00**	**SHNC9**	
(i)	Per OC-48, 2-Fiber	**1,600.00**	**640.00**	**SHNCJ**	
(j)	Per OC-48, 4-Fiber	**3,200.00**	**640.00**	**SHNCK**	
(k)	Per 28 DS1 Channel System - DS3	**650.00**	**130.00**	**SHNW8**	
(l)	Per 28 DS1 Channel System - STS-1	**750.00**	**130.00**	**SHNCS**	
(m)	Per DS1 on 28 DS1 Channel System - DS3	**12.00**	**130.00**	**SHNCA**	
(n)	Per DS1 on 28 DS1 Channel System - STS-1	**40.00**	**82.00**	**SHNCG**	
(o)	Per 1000 Mbps	**740.00**	**400.00**	**SHNCW**	
(p)	Per 100 Mbps (1 STS-1) BellSouth Metro Ethernet Backbone	**500.00**	**800.00**	**SHNOJ**	
(q)	Per 100 Mbps (3 STS-1) BellSouth Metro Ethernet Backbone	**540.00**	**800.00**	**SHNCX**	
(r)	Per 1000 Mbps BellSouth Metro Ethernet Backbone	**740.00**	**850.00**	**SHNC5**	
(s)	Per Fractional 1000 Mbps Metro Ethernet Backbone				(N)
	- 150 Mbps (3 STS-1)	**560.00**	**850.00**	**SHND5**	(N)
	- 300 Mbps (6 STS-1)	**600.00**	**850.00**	**SHND6**	(N)
	- 450 Mbps (9 STS-1)	**640.00**	**850.00**	**SHND7**	(N)
	- 600 Mbps (12 STS-1)	**700.00**	**850.00**	**SHND8**	(N)

All BellSouth marks contained herein and as set forth in the trademarks and service marks section of the BellSouth Tariffs are owned by BellSouth Intellectual Property Corporation.

E7. SPECIAL ACCESS (A.K.A BELLSOUTH SPA) SERVICE

E7.5 Rates and Charges (Cont'd)

E7.5.18 SMARTRing service (a.k.a BellSouth Dedicated Ring) (Cont'd)

B. Self-healing Multi-nodal Alternate Route Topology Ring - Transport Payment Plan (M)

1. Local Channel (All capacities except OC-1) (M)

	Per Month Rates A 12-36 Months	B 37-60 Months	C 61-96 Months	USOC	
(a) Per Quarter Air Mile	**$85.00**	**$75.00**	**$70.00**	**1HVXX**	(M)
2. Alternate Central Office (All capacities except OC-1)					(M)
(a) Per Quarter Air Mile	**400.00**	**250.00**	**200.00**	**1HAXX**	(M)
3. Interoffice Channel (All capacities except OC-1)					(M)
(a) Fixed, OC-3 Capacity	**40.00**	**35.00**	**30.00**	**1HXFX**	(M)
(b) Fixed, OC-3+, OC-12, OC-48 or OC-48+ Capacity	**155.00**	**140.00**	**130.00**	**1HXFX**	(M)
(c) Fixed, OC-192 or OC-192+ Capacity	**450.00**	**400.00**	**380.00**	**1HXFX**	(M)
(d) Per Quarter Air Mile, OC-3 Capacity	**35.00**	**25.00**	**20.00**	**1HXFX**	(M)
(e) Per Quarter Air Mile, OC-3+, OC-12, OC-48 or OC-48+ Capacity	**40.00**	**33.00**	**25.00**	**1HXFX**	(M)
(f) Per Quarter Air Mile, OC-192 or OC-192+ Capacity	**40.00**	**33.00**	**25.00**	**1HXFX**	(M)
4. Internodal Channel (All capacities except OC-1)					(M)
(a) Per Internodal Channel, Same Wire Center Area, Per Quarter Air Mile	**690.00**	**415.00**	**345.00**	**1HNXX**	(M)
(b) Per Internodal Channel, Same Office Park/Campus Environment in Contiguous Serving Wire Center Areas, Per Quarter Air Mile	**780.00**	**465.00**	**390.00**	**1HNZX**	(M)
5. Customer Node (Per Customer Node)					(M)
(a) OC-1 Capacity	**400.00**	**350.00**	**300.00**	**SHNC4**	(M)
(b) OC-3 Capacity	**1,100.00**	**1,000.00**	**900.00**	**SHNC3**	(M)
(c) OC-3+ Capacity	**2,050.00**	**1,750.00**	**1,500.00**	**SHNN5**	(M)
(d) OC-12 Capacity	**2,200.00**	**2,000.00**	**1,750.00**	**SHNC1**	(M)
(e) OC-48 Capacity	**4,900.00**	**4,500.00**	**3,900.00**	**SHNN8**	(M)
(f) OC-48+ Capacity	**4,900.00**	**4,500.00**	**3,900.00**	**SHNN9**	(M)
(g) OC-192 Capacity	**9,375.00**	**8,250.00**	**7,300.00**	**SHNN6**	(M)
(h) OC-192+ Capacity	**9,375.00**	**8,250.00**	**7,300.00**	**SHNN2**	(M)

Material appearing on this page previously appeared on page(s) 46.5 of this section.

All BellSouth marks contained herein and as set forth in the trademarks and service marks section of the BellSouth Tariffs are owned by BellSouth Intellectual Property Corporation.

E7. SPECIAL ACCESS (A.K.A. BELLSOUTH SPA) SERVICES

E7.5 Rates and Charges (Cont'd)

E7.5.18 SMARTRing service (a.k.a BellSouth Dedicated Ring) (Cont'd)

B. Self-healing Multi-nodal Alternate Route Topology Ring - Transport Payment Plan (Cont'd)

6. Customer Channel Interface (Per Customer Node)

		Per Month Rates A 12-36 Months	B 37-60 Months	C 61-96 Months	USOC	
(a)	Per DS1	$34.00	$27.00	$21.00	SHNBB	
(b)	Per DS3	135.00	130.00	125.00	SHNZT	
(c)	Per STS-1	170.00	150.00	140.00	SHN13	
(d)	Per OC-1	90.00	80.00	75.00	SHN1C	
(e)	Per OC-3, 2-Fiber	190.00	175.00	160.00	SHN1D	
(f)	Per OC-3, 4-Fiber	380.00	350.00	320.00	SHN15	
(g)	Per OC-12, 2-Fiber	570.00	525.00	480.00	SHN1F	
(h)	Per OC-12, 4-Fiber	1,140.00	1,050.00	960.00	SHN19	
(i)	Per OC-48, 2-Fiber	1,325.00	1,215.00	1,050.00	SHN1A	
(j)	Per OC-48, 4-Fiber	2,650.00	2,430.00	2,100.00	SHN1B	
(k)	Per 1000 Mbps	520.00	475.00	425.00	SHN1K	
(l)	Per 100 Mbps (1 STS-1) BellSouth Metro Ethernet Backbone	175.00	155.00	140.00	SHN1J	
(m)	Per 100 Mbps (3 STS-1) BellSouth Metro Ethernet Backbone	210.00	190.00	170.00	SHN33	
(n)	Per 1000 Mbps BellSouth Metro Ethernet Backbone	520.00	475.00	425.00	SHN34	
(o)	Per Fractional 1000 Mbps Metro Ethernet Backbone					(N)
	- 150 Mbps (3 STS-1)	230.00	210.00	190.00	SHN35	(N)
	- 300 Mbps (6 STS-1)	300.00	280.00	260.00	SHN36	(N)
	- 450 Mbps (9 STS-1)	340.00	310.00	290.00	SHN37	(N)
	- 600 Mbps (12 STS-1)	380.00	340.00	320.00	SHN38	(N)

7. Central Office Node (Per Central Office Node)

(a)	OC-1 Capacity	400.00	350.00	300.00	SHNH4	
(b)	OC-3 Capacity	1,100.00	1,000.00	900.00	SHNH3	
(c)	OC-3+ Capacity	2,050.00	1,750.00	1,500.00	SHNH5	
(d)	OC-12 Capacity	2,200.00	2,000.00	1,750.00	SHNH1	
(e)	OC-48 Capacity	4,900.00	4,500.00	3,900.00	SHNH8	
(f)	OC-48+ Capacity	4,900.00	4,500.00	3,900.00	SHNH9	
(g)	OC-192 Capacity	9,375.00	8,250.00	7,300.00	SHNH7	
(h)	OC-192+ Capacity	9,375.00	8,250.00	7,300.00	SHNH6	
(i)	OC-3 Shared Node Interconnection	690.00	630.00	570.00	SHNHE	(N)
(j)	OC-12 Shared Node Interconnection	1,390.00	1,260.00	1,100.00	SHNHE	(N)
(k)	OC-48 Shared Node Interconnection	2,880.00	2,840.00	2,460.00	SHNHE	(N)
(l)	OC-48+ Shared Node Interconnection	2,880.00	2,840.00	2,460.00	SHNHE	(N)

All BellSouth marks contained herein and as set forth in the trademarks and service marks section of the BellSouth Tariffs are owned by BellSouth Intellectual Property Corporation.

E7. SPECIAL ACCESS (A.K.A. BELLSOUTH SPA) SERVICES

E7.5 Rates and Charges (Cont'd)

E7.5.18 SMARTRing service (a.k.a BellSouth Dedicated Ring) (Cont'd)

B. Self-healing Multi-nodal Alternate Route Topology Ring - Transport Payment Plan (Cont'd)

8. Central Office Channel Interface (Per Central Office Node)

		Per Month Rates				
		A 12-36 Months	**B 37-60 Months**	**C 61-96 Months**	**USOC**	
(a)	Per DS1	**$30.00**	**$25.00**	**$20.00**	**SHNCB**	
(b)	Per DS3	**85.00**	**80.00**	**75.00**	**SHNYT**	
(c)	Per STS-1	**105.00**	**100.00**	**90.00**	**SHNO2**	
(d)	Per OC-1	**90.00**	**80.00**	**75.00**	**SHNCC**	
(e)	Per OC-3, 2-Fiber	**190.00**	**175.00**	**160.00**	**SHNCD**	
(f)	Per OC-3, 4-Fiber	**330.00**	**300.00**	**270.00**	**SHNO4**	
(g)	Per OC-12, 2-Fiber	**495.00**	**450.00**	**405.00**	**SHNCF**	
(h)	Per OC-12, 4-Fiber	**990.00**	**900.00**	**810.00**	**SHNC9**	
(i)	Per OC-48, 2-Fiber	**1,325.00**	**1,215.00**	**1,050.00**	**SHNCJ**	
(j)	Per OC-48, 4-Fiber	**2,650.00**	**2,430.00**	**2,100.00**	**SHNCK**	
(k)	Per 28 DS1 Channel System - DS3	**550.00**	**500.00**	**450.00**	**SHNW8**	
(l)	Per 28 DS1 Channel System - STS-1	**650.00**	**600.00**	**575.00**	**SHNCS**	
(m)	Per DS1 on 28 DS1 Channel System - DS3	**12.00**	**9.00**	**7.00**	**SHNCA**	
(n)	Per DS1 on 28 DS1 Channel System - STS-1	**35.00**	**30.00**	**25.00**	**SHNCG**	
(o)	Per 1000 Mbps	**520.00**	**475.00**	**425.00**	**SHNCW**	
(p)	Per 100 Mbps (1 STS-1) BellSouth Metro Ethernet Backbone	**175.00**	**155.00**	**140.00**	**SHNOJ**	
(q)	Per 100 Mbps (3 STS-1) BellSouth Metro Ethernet Backbone	**210.00**	**190.00**	**170.00**	**SHNCX**	
(r)	Per 1000 Mbps BellSouth Metro Ethernet Backbone	**520.00**	**475.00**	**425.00**	**SHNC5**	
(s)	Per Fractional 1000 Mbps Metro Ethernet Backbone					(N)
	- 150 Mbps (3 STS-1)	**230.00**	**210.00**	**190.00**	**SHND5**	(N)
	- 300 Mbps (6 STS-1)	**300.00**	**280.00**	**260.00**	**SHND6**	(N)
	- 450 Mbps (9 STS-1)	**340.00**	**310.00**	**290.00**	**SHND7**	(N)
	- 600 Mbps (12 STS-1)	**380.00**	**340.00**	**320.00**	**SHND8**	(N)

C. Self-healing Multi-nodal Alternate Route Topology Ring

1. Channel Interface Reallocation

		Nonrecurring Charge	**USOC**
(a)	Per Node, Per Occurrence	**$245.00**	**SHRBC**

All BellSouth marks contained herein and as set forth in the trademarks and service marks section of the BellSouth Tariffs are owned by BellSouth Intellectual Property Corporation.

E7. SPECIAL ACCESS (A.K.A. BELLSOUTH SPA) SERVICE

E7.5 Rates and Charges (Cont'd)

E7.5.20 Reserved For Future Use

E7.5.21 Reserved For Future Use

E7.5.22 BellSouth Metro Ethernet Service

A. Rates and charges for month-to-month service

1. Basic BellSouth Metro Ethernet Service Arrangements

	Nonrecurring Charge	Month to Month	USOC	
(a) 2 Mbps Basic Connection				(N)
- Per Connection	**$ 950.00**	**$ 495.00**	**MTEBO**	(N)
(b) 4 Mbps Basic Connection				(N)
- Per Connection	**950.00**	**515.00**	**MTEB1**	(N)
(c) 8 Mbps Basic Connection				(N)
- Per Connection	**950.00**	**600.00**	**MTEB2**	(N)
(***d***) 10 Mbps Basic Connection				(T)
- Per Connection	**900.00**	**680.00**	**MTEBA**	(T)
(***e***) 100 Mbps Basic Connection				(T)
- Per Connection	**900.00**	**1,310.00**	**MTEBB**	
(***f***) 1 Gbps Basic Connection				(T)
- Per Connection	**1,000.00**	**2,850.00**	**MTEBC**	

2. Premium BellSouth Metro Ethernet Service Arrangements

(a) 2 Mbps Premium Connection				(N)
- Per Connection, Fixed Mode	**950.00**	**548.00**	**MTEPO**	(N)
(b) 4 Mbps Premium Connection				(N)
- Per Connection, Fixed Mode	**950.00**	**576.00**	**MTEP1**	(N)
(c) 8 Mbps Premium Connection				(N)
- Per Connection, Fixed Mode	**950.00**	**664.00**	**MTEP2**	(N)
(***d***) 10 Mbps Premium Connection				(T)
- Per Connection, Fixed Mode	**900.00**	**904.00**	**MTEP3**	
- Per Connection, Burst Mode	**900.00**	**1,133.00**	**MTEE3**	
(***e***) 20 Mbps Premium Connection				(T)
- Per Connection, Fixed Mode	**900.00**	**1,128.00**	**MTEP4**	
- Per Connection, Burst Mode	**900.00**	**1,268.00**	**MTEE4**	
(***f***) 50 Mbps Premium Connection				(T)
- Per Connection, Fixed Mode	**900.00**	**1,488.00**	**MTEP5**	
- Per Connection, Burst Mode	**900.00**	**1,545.00**	**MTEE5**	
(***g***) 100 Mbps Premium Connection				(T)
- Per Connection, Fixed Mode	**1,000.00**	**1,800.00**	**MTEP6**	
- Per Connection, Burst Mode	**1,000.00**	**2,018.00**	**MTEE6**	
(***h***) 250 Mbps Premium Connection				(T)
- Per Connection, Fixed Mode	**1,000.00**	**2,248.00**	**MTEP7**	
- Per Connection, Burst Mode	**1,000.00**	**2,415.00**	**MTEE7**	
(***i***) 500 Mbps Premium Connection				(T)
- Per Connection, Fixed Mode	**1,000.00**	**2,992.00**	**MTEP8**	
- Per Connection, Burst Mode	**1,000.00**	**3,098.00**	**MTEE8**	
(***j***) 900 Mbps Premium Connection				(T)
- Per Connection, Fixed Mode	**1,500.00**	**4,436.00**	**MTEP9**	

3. Dedicated BellSouth Metro Ethernet Service Arrangements

(a) 100 Mbps Dedicated Connection			
- Per Connection	**900.00**	**1,728.00**	**MTEDB**
(b) 1 Gbps Dedicated Connection			
- Per Connection	**1,000.00**	**3,448.00**	**MTEDC**

All BellSouth marks contained herein and as set forth in the trademarks and service marks section of the BellSouth Tariffs are owned by BellSouth Intellectual Property Corporation.

E7. SPECIAL ACCESS (A.K.A. BELLSOUTH SPA) SERVICE

E7.5 Rates and Charges (Cont'd)

E7.5.22 BellSouth Metro Ethernet Service (Cont'd)

A. Rates and charges for month-to-month service (Cont'd)

4. Virtual BellSouth Metro Ethernet Service Arrangements[1]

(a) 2 Mbps Virtual Connection

	Nonrecurring Charge	Month to Month	USOC
- Per Connection	**$ 1,000.00**	**$ 388.00**	**MTEVO**
(b) 4 Mbps Virtual Connection			
- Per Connection	**1,000.00**	**416.00**	**MTEV1**
(c) 8 Mbps Virtual Connection			
- Per Connection	**1,000.00**	**504.00**	**MTEV2**
(d) 10 Mbps Virtual Connection			
- Per Connection	**1,000.00**	**744.00**	**MTEV3**
(e) 20 Mbps Virtual Connection			
- Per Connection	**1,000.00**	**968.00**	**MTEV4**
(f) 50 Mbps Virtual Connection			
- Per Connection	**1,000.00**	**1,328.00**	**MTEV5**
(g) 80 Mbps Virtual Connection			
- Per Connection	**1,000.00**	**1,484.00**	**MTEV6**
(h) 100 Mbps Virtual Connection			
- Per Connection	**1,500.00**	**1,640.00**	**MTEV7**
(i) 200 Mbps Virtual Connection			
- Per Connection	**1,500.00**	**2,088.00**	**MTEV8**
(j) 300 Mbps Virtual Connection			
- Per Connection	**1,500.00**	**2,356.00**	**MTEV9**
(k) 450 Mbps Virtual Connection			
- Per Connection	**1,500.00**	**2,832.00**	**MTEVA**
(l) 600 Mbps Virtual Connection			
- Per Connection	**1,750.00**	**3,364.00**	**MTEVB**
(m) 750 Mbps Virtual Connection			
- Per Connection	**1,750.00**	**3,920.00**	**MTEVC**
(n) 900 Mbps Virtual Connection			
- Per Connection	**2,000.00**	**4,276.00**	**MTEVD**

5. BellSouth Metro Ethernet Service Independent Company (ICO) Trunk Arrangements (N)

(a) ICO Trunk Connection (N)

- Per VLAN Connection	**1,300.00**	**775.00**	**MTEGC**	(N)

Note 1: Each Virtual Connection requires the establishment of a Class of Service (CoS) profile.

All BellSouth marks contained herein and as set forth in the trademarks and service marks section of the BellSouth Tariffs are owned by BellSouth Intellectual Property Corporation.

E7. SPECIAL ACCESS (A.K.A. BELLSOUTH SPA) SERVICE

E7.5 Rates and Charges (Cont'd)

E7.5.22 BellSouth Metro Ethernet Service (Cont'd)

A. Rates and charges for month-to-month service (Cont'd)

6. BellSouth Metro Ethernet Service Additional Mileage (T)

(a) BellSouth Metro Ethernet Service Additional Mileage:
BellSouth Metro Ethernet Service arrangements greater than
10 miles through 25 airline miles

	Month to Month	USOC
- Per 2 – 9 Mbps Connection[1]	$ 320.00	MTEMO
- Per 10 – 99 Mbps Connection	333.00	MTEMA
- Per 100 – 499 Mbps Connection	414.00	MTEMB
- Per 500 Mbps – 1 Gbps Connection	504.00	MTEMC

(b) BellSouth Metro Ethernet Service Additional Mileage:
BellSouth Metro Ethernet Service arrangements greater than
25 miles through 35 airline miles

- Per 2 – 9 Mbps Connection[1]	525.00	MTEMD
- Per 10 – 99 Mbps Connection	558.00	MTEME
- Per 100 – 499 Mbps Connection	702.00	MTEMF
- Per 500 Mbps – 1 Gbps Connection	837.00	MTEMG

(c) BellSouth Metro Ethernet Service Additional Mileage:
BellSouth Metro Ethernet Service arrangements greater than
35 miles through 50 airline miles

- Per 2 – 9 Mbps Connection[1]	800.00	MTEMH
- Per 10 – 99 Mbps Connection	873.00	MTEMJ
- Per 100 – 499 Mbps Connection	1,089.00	MTEMK
- Per 500 Mbps – 1 Gbps Connection	1,314.00	MTEML

7. BellSouth Metro Ethernet Service Independent Company (ICO) Trunk Additional Mileage Charges (N)

(a) BellSouth Metro Ethernet Service ICO Trunk Additional Mileage: (N)
BellSouth Metro Ethernet Service ICO Trunk arrangements greater than (N)
10 miles through 25 airline miles
- per VLAN Connection **170.00** **MTEM1** (N)

(b) BellSouth Metro Ethernet Service ICO Trunk Additional Mileage: (N)
BellSouth Metro Ethernet Service ICO Trunk arrangements greater than (N)
25 miles through 35 airline miles
- per VLAN Connection **420.00** **MTEM2** (N)

(c) BellSouth Metro Ethernet Service ICO Trunk Additional Mileage: (N)
BellSouth Metro Ethernet Service ICO Trunk arrangements greater than (N)
35 miles through 50 airline miles
- per VLAN Connection **675.00** **MTEM3** (N)

Note 1: Not available for Dedicated Arrangements.

All BellSouth marks contained herein and as set forth in the trademarks and service marks section of the BellSouth Tariffs are owned by BellSouth Intellectual Property Corporation.

E7. SPECIAL ACCESS (A.K.A. BELLSOUTH SPA) SERVICE

E7.5 Rates and Charges (Cont'd)

E7.5.22 BellSouth Metro Ethernet Service (Cont'd)

A. Rates and charges for month-to-month service (Cont'd)

8. Priority Plus Feature[1] (T)

	Nonrecurring Charge	Month to Month	USOC
- Per Connection	$ -	$ 120.00	MTETP

9. Q-Forwarding Feature[1] (T)

(a) Q-Forwarding Service Establishment Charge - Per Connection	400.00	-	MTEQF
(b) Q-Forwarding Network Assignment Charge - Per Network, Per Connection	-	80.00	MTEQN

10. VLAN Aggregation Feature[2] (T)

(a) VLAN Aggregation Service Establishment Charge - Per Connection	400.00	-	MTEQE
(b) VLAN Aggregation Network Assignment Charge - Per VLAN, Per Connection	-	80.00	MTEQV

11. CNM - Metro Ethernet Reporting Feature[3] (T)

(a) CNM - Metro Ethernet Reporting, Service Establishment Charge - Per Customer Account	225.00	-	MTERE
(b) CNM - Metro Ethernet Reporting Charge - Per Connection	-	10.00	MTERC
(c) CNM - Metro Ethernet Reporting, Web Interface Charge			
- First	-	-	MTER1
- Each Additional	65.00	20.00	MTERW
(d) CNM - Metro Ethernet Reporting, Security Card - Each	200.00	-	MTERS

Note 1: Optional feature only available with a Premium Connection.

Note 2: Optional feature only available with a Virtual Connection.

Note 3: Optional feature only available with a Premium or Virtual Connection.

All BellSouth marks contained herein and as set forth in the trademarks and service marks section of the BellSouth Tariffs are owned by BellSouth Intellectual Property Corporation.

E7. SPECIAL ACCESS (A.K.A. BELLSOUTH SPA) SERVICE

E7.5 Rates and Charges (Cont'd)

E7.5.22 BellSouth Metro Ethernet Service (Cont'd)

A. Rates and charges for month-to-month service (Cont'd)

12. Class of Service (CoS) Profile[1] (T)

(a) Real-Time CoS[2]

	Month to Month	USOC
- 10%	$ 54.00	MTETF
- 20%	108.00	MTETG
- 25%	135.00	MTETH
- 30%	162.00	MTETJ
- 35%	189.00	MTETK
- 40%	216.00	MTETL
- 50%	270.00	MTETM
- 70%	378.00	MTETO

(b) Interactive CoS[2]

- 10%	45.00	MTEVF
- 20%	90.00	MTEVG
- 25%	112.00	MTEVH
- 30%	135.00	MTEVJ
- 35%	157.00	MTEVK
- 40%	180.00	MTEVL
- 50%	225.00	MTEVM

Note 1: Each Virtual Connection requires the designation of a CoS profile with desired percentages of each CoS selected. The sum of the percentages for all CoS selected for a Virtual Connection must sum to 100%.

Note 2: The combined CoS bandwidth percentages selected in a customer's Virtual Connection CoS profile for Real-Time CoS plus Interactive CoS may not exceed 50%, except where the customer selects the 70% Real-Time CoS bandwidth percentage and has no Interactive traffic.

All BellSouth marks contained herein and as set forth in the trademarks and service marks section of the BellSouth Tariffs are owned by BellSouth Intellectual Property Corporation.

E7. SPECIAL ACCESS (A.K.A. BELLSOUTH SPA) SERVICE

E7.5 Rates and Charges (Cont'd)

E7.5.22 BellSouth Metro Ethernet Service (Cont'd)

A. Rates and charges for month-to-month service (Cont'd)

12. Class of Service (CoS) Profile[1] (Cont'd) (T)

(c) Business Critical CoS

	Month to Month	USOC
- 10%	$ 27.00	MTEPF
- 20%	54.00	MTEPG
- 25%	67.00	MTEPH
- 30%	81.00	MTEPJ
- 35%	94.00	MTEPK
- 40%	108.00	MTEPL
- 50%	135.00	MTEPM
- 60%	162.00	MTEPN
- 75%	202.00	MTEPP
- 90%	243.00	MTEPQ
- 100%	270.00	MTEPR

(d) Best Effort CoS

- 10%	9.00	MTEBF
- 20%	18.00	MTEBG
- 25%	22.00	MTEBH
- 30%	27.00	MTEBJ
- 35%	31.00	MTEBK
- 40%	36.00	MTEBL
- 50%	45.00	MTEBM
- 60%	54.00	MTEBN
- 75%	67.00	MTEBP
- 90%	81.00	MTEBQ

Note 1: Each Virtual Connection requires the designation of a CoS profile with desired percentages of each CoS selected. The sum of the percentages for all CoS selected for a Virtual Connection must sum to 100%.

All BellSouth marks contained herein and as set forth in the trademarks and service marks section of the BellSouth Tariffs are owned by BellSouth Intellectual Property Corporation.

E7. SPECIAL ACCESS (A.K.A. BELLSOUTH SPA) SERVICE

E7.5 Rates and Charges (Cont'd)

E7.5.22 BellSouth Metro Ethernet Service (Cont'd)

A. Rates and charges for month-to-month service (Cont'd)

13. Automatic Protection Switching (APS) Feature[1]: Selected to provide automatic protection switching in conjunction with a Basic, Premium or Virtual BellSouth Metro Ethernet Connection of 10 Mbps or higher. Applicable APS rate element based upon type of APS selected and actual total route miles[2] (rounded up to next whole mile) based upon a customer-specific design as determined by the Telephone Company. (T)

(a) Structural Protection

	Nonrecurring Charge	Month to Month	USOC
- Per APS Arrangement of less than 10 route miles	**$ 1000.00**	**$ 1900.00**	**MTEAO**
- Per APS Arrangement of 10 through 25 route miles	**1500.00**	**2145.00**	**MTEA1**
- Per APS Arrangement of greater than 25 through 35 route miles	**2000.00**	**2445.00**	**MTEA2**
- Per APS Arrangement of greater than 35 through 50 route miles	**2500.00**	**2900.00**	**MTEA3**

(b) Route Protection

- Per APS Arrangement of less than 10 route miles	**1500.00**	**2320.00**	**MTEA5**
- Per APS Arrangement of 10 through 25 route miles	**2000.00**	**2610.00**	**MTEA6**
- Per APS Arrangement of greater than 25 through 35 route miles	**2500.00**	**2965.00**	**MTEA7**
- Per APS Arrangement of greater than 35 through 50 route miles	**3000.00**	**3435.00**	**MTEA8**

14. Optical Termination Charge: An electrical termination on the customer premises is standard for 2, 4 and 8 Mbps Basic, Premium and Virtual Connections. Therefore, an Optical Termination Charge applies when an optional optical termination is requested and provided for a 2, 4 or 8 Mbps Connection. (T)

(a) Per Optical Termination

- Per Connection	**-**	**30.00**	**MTEO1**

15. Service Reconfiguration Charge (T)

(a) Per Request

- Per Connection	**200.00**	**-**	**MTESR**

16. System Reconfiguration Charge (T)

(a) Per Request

- Per Connection	**900.00**	**-**	**MTESY**

Note 1: Optional feature only available with a Basic, Premium or Virtual Connection of 10 Mbps or higher. (APS is not available for a 2 Mbps, 4 Mbps or 8 Mbps Basic, Premium or Virtual Connection).

Note 2: Per definition of route mileage provided in E7.2.18U preceding.

All BellSouth marks contained herein and as set forth in the trademarks and service marks section of the BellSouth Tariffs are owned by BellSouth Intellectual Property Corporation.

E7. SPECIAL ACCESS (A.K.A. BELLSOUTH SPA) SERVICE

E7.5 Rates and Charges (Cont'd)

E7.5.22 BellSouth Metro Ethernet Service (Cont'd)

B. Rates and charges for Transport Payment Plan

1. Basic BellSouth Metro Ethernet Service Arrangements

	Nonrecurring Charge	Transport Payment Plan Rates A 12-36 Mos	B 37-60 Mos	C 61-96 Mos	USOC	
(a) 2 Mbps Basic Connection						(N)
- Per Connection	$ -	$ 380.00	$ 360.00	$ 345.00	MTEBO	(N)
(b) 4 Mbps Basic Connection						(N)
- Per Connection	-	500.00	415.00	395.00	MTEB1	(N)
(c) 8 Mbps Basic Connection						(N)
- Per Connection	-	540.00	475.00	450.00	MTEB2	(N)
(*d*) 10 Mbps Basic Connection						(T)
- Per Connection	-	630.00	599.00	550.00	MTEBA	(T)
(*e*) 100 Mbps Basic Connection						(T)
- Per Connection	-	1,180.00	1,121.00	1,065.00	MTEBB	
(*f*) 1 Gbps Basic Connection						(T)
- Per Connection	-	2,565.00	2,437.00	2,315.00	MTEBC	

2. Premium BellSouth Metro Ethernet Service Arrangements

(a) 2 Mbps Premium Connection						(N)
- Per Connection, Fixed Mode	-	500.00	435.00	415.00	MTEPO	(N)
(b) 4 Mbps Premium Connection						(N)
- Per Connection, Fixed Mode	-	540.00	470.00	445.00	MTEP1	(N)
(c) 8 Mbps Premium Connection						(N)
- Per Connection, Fixed Mode	-	640.00	510.00	485.00	MTEP2	(N)
(*d*) 10 Mbps Premium Connection						(T)
- Per Connection, Fixed Mode	-	720.00	684.00	650.00	MTEP3	
- Per Connection, Burst Mode	-	900.00	855.00	812.00	MTEE3	
(*e*) 20 Mbps Premium Connection						(T)
- Per Connection, Fixed Mode	-	904.00	859.00	816.00	MTEP4	
- Per Connection, Burst Mode	-	1,013.00	962.00	914.00	MTEE4	
(*f*) 50 Mbps Premium Connection						(T)
- Per Connection, Fixed Mode	-	1,192.00	1,132.00	1,075.00	MTEP5	
- Per Connection, Burst Mode	-	1,238.00	1,176.00	1,117.00	MTEE5	
(*g*) 100 Mbps Premium Connection						(T)
- Per Connection, Fixed Mode	-	1,440.00	1,368.00	1,300.00	MTEP6	
- Per Connection, Burst Mode	-	1,613.00	1,532.00	1,455.00	MTEE6	
(*h*) 250 Mbps Premium Connection						(T)
- Per Connection, Fixed Mode	-	1,800.00	1,710.00	1,625.00	MTEP7	
- Per Connection, Burst Mode	-	1,935.00	1,838.00	1,746.00	MTEE7	
(*i*) 500 Mbps Premium Connection						(T)
- Per Connection, Fixed Mode	-	2,392.00	2,272.00	2,158.00	MTEP8	
- Per Connection, Burst Mode	-	2,475.00	2,351.00	2,233.00	MTEE8	
(*j*) 900 Mbps Premium Connection						(T)
- Per Connection, Fixed Mode	-	3,700.00	3,532.00	3,356.00	MTEP9	

3. Dedicated BellSouth Metro Ethernet Service Arrangements

(a) 100 Mbps Dedicated Connection					
- Per Connection	-	1,384.00	1,248.00	1,186.00	MTEDB
(b) 1 Gbps Dedicated Connection					
- Per Connection	-	2,760.00	2,488.00	2,364.00	MTEDC

All BellSouth marks contained herein and as set forth in the trademarks and service marks section of the BellSouth Tariffs are owned by BellSouth Intellectual Property Corporation.

E7. SPECIAL ACCESS (A.K.A. BELLSOUTH SPA) SERVICE

E7.5 Rates and Charges (Cont'd)

E7.5.22 BellSouth Metro Ethernet Service (Cont'd)

B. Rates and charges for Transport Payment Plan (Cont'd)

4. Virtual BellSouth Metro Ethernet Service Arrangements[1]

		Nonrecurring Charge	Transport Payment Plan Rates A 12-36 Mos	B 37-60 Mos	C 61-96 Mos	USOC	
(a)	2 Mbps Virtual Connection						
	- Per Connection	$ -	$ 340.00	$ 321.00	$ 305.00	MTEVO	
(b)	4 Mbps Virtual Connection						
	- Per Connection	-	380.00	359.00	341.00	MTEV1	
(c)	8 Mbps Virtual Connection						
	- Per Connection	-	480.00	454.00	431.00	MTEV2	
(d)	10 Mbps Virtual Connection						
	- Per Connection	-	560.00	529.00	503.00	MTEV3	
(e)	20 Mbps Virtual Connection						
	- Per Connection	-	744.00	703.00	668.00	MTEV4	
(f)	50 Mbps Virtual Connection						
	- Per Connection	-	1,032.00	975.00	926.00	MTEV5	
(g)	80 Mbps Virtual Connection						
	- Per Connection	-	1,156.00	1,092.00	1,038.00	MTEV6	
(h)	100 Mbps Virtual Connection						
	- Per Connection	-	1,280.00	1,210.00	1,149.00	MTEV7	
(i)	200 Mbps Virtual Connection						
	- Per Connection	-	1,640.00	1,550.00	1,472.00	MTEV8	
(j)	300 Mbps Virtual Connection						
	- Per Connection	-	1,936.00	1,830.00	1,738.00	MTEV9	
(k)	450 Mbps Virtual Connection						
	- Per Connection	-	2,232.00	2,109.00	2,004.00	MTEVA	
(l)	600 Mbps Virtual Connection						
	- Per Connection	-	2,660.00	2,514.00	2,388.00	MTEVB	
(m)	750 Mbps Virtual Connection						
	- Per Connection	-	3,104.00	2,933.00	2,787.00	MTEVC	
(n)	900 Mbps Virtual Connection						
	- Per Connection	-	3,540.00	3,345.00	3,178.00	MTEVD	

5. BellSouth Metro Ethernet Service Independent Company (ICO) Trunk Arrangements (N)

(a)	ICO Trunk Connection						(N)
	- Per VLAN Connection	-	500.00	450.00	405.00	MTEGC	(N)

Note 1: Each Virtual Connection requires the establishment of a Class of Service (CoS) profile.

All BellSouth marks contained herein and as set forth in the trademarks and service marks section of the BellSouth Tariffs are owned by BellSouth Intellectual Property Corporation.

E7. SPECIAL ACCESS (A.K.A. BELLSOUTH SPA) SERVICE

E7.5 Rates and Charges (Cont'd)

E7.5.22 BellSouth Metro Ethernet Service (Cont'd)

B. Rates and charges for Transport Payment Plan (Cont'd)

6. BellSouth Metro Ethernet Service Additional Mileage (T)

(a) BellSouth Metro Ethernet Service Additional Mileage:
BellSouth Metro Ethernet Service arrangements greater than
10 miles through 25 airline miles

	Nonrecurring Charge	Transport Payment Plan Rates A 12-36 Mos	B 37-60 Mos	C 61-96 Mos	USOC
- Per 2 – 9 Mbps Connection[1]	$ -	$ 320.00	$ 320.00	$ 320.00	MTEMO
- Per 10 – 99 Mbps Connection	-	333.00	333.00	333.00	MTEMA
- Per 100 – 499 Mbps Connection	-	414.00	414.00	414.00	MTEMB
- Per 500 Mbps – 1 Gbps Connection	-	504.00	504.00	504.00	MTEMC

(b) BellSouth Metro Ethernet Service Additional Mileage:
BellSouth Metro Ethernet Service arrangements greater than
25 miles through 35 airline miles

- Per 2 – 9 Mbps Connection[1]	-	525.00	525.00	525.00	MTEMD
- Per 10 – 99 Mbps Connection	-	558.00	558.00	558.00	MTEME
- Per 100 – 499 Mbps Connection	-	702.00	702.00	702.00	MTEMF
- Per 500 Mbps – 1 Gbps Connection	-	837.00	837.00	837.00	MTEMG

(c) BellSouth Metro Ethernet Service Additional Mileage:
BellSouth Metro Ethernet Service arrangements greater than
35 miles through 50 airline miles

- Per 2 – 9 Mbps Connection[1]	-	800.00	800.00	800.00	MTEMH
- Per 10 – 99 Mbps Connection	-	873.00	873.00	873.00	MTEMJ
- Per 100 – 499 Mbps Connection	-	1,089.00	1,089.00	1,089.00	MTEMK
- Per 500 Mbps – 1 Gbps Connection	-	1,314.00	1,314.00	1,314.00	MTEML

7. BellSouth Metro Ethernet Service Independent Company (ICO) Trunk Additional Mileage Charges (N)

(a) BellSouth Metro Ethernet Service ICO Trunk Additional Mileage: (N)
BellSouth Metro Ethernet Service ICO Trunk arrangements greater than (N)
10 miles through 25 airline miles

- per VLAN Connection	-	170.00	170.00	170.00	MTEM1	(N)

(b) BellSouth Metro Ethernet Service ICO Trunk Additional Mileage: (N)
BellSouth Metro Ethernet Service ICO Trunk arrangements greater than (N)
25 miles through 35 airline miles

- per VLAN Connection	-	420.00	420.00	420.00	MTEM2	(N)

(c) BellSouth Metro Ethernet Service ICO Trunk Additional Mileage: (N)
BellSouth Metro Ethernet Service ICO Trunk arrangements greater than (N)
35 miles through 50 airline miles

- per VLAN Connection	-	675.00	675.00	675.00	MTEM3	(N)

Note 1: Not available for Dedicated Arrangements.

All BellSouth marks contained herein and as set forth in the trademarks and service marks section of the BellSouth Tariffs are owned by BellSouth Intellectual Property Corporation.

E7. SPECIAL ACCESS (A.K.A. BELLSOUTH SPA) SERVICE

E7.5 Rates and Charges (Cont'd)

E7.5.22 BellSouth Metro Ethernet Service (Cont'd)

B. Rates and charges for Transport Payment Plan (Cont'd)

8. Priority Plus Feature[1] (T)

		Transport Payment Plan Rates			
	Nonrecurring Charge[2]	A 12-36 Mos	B 37-60 Mos	C 61-96 Mos	USOC
- Per Connection	$ -	$ 95.00	$ 85.00	$ 80.00	MTETP

9. Q-Forwarding Feature[1] (T)

(a) Q-Forwarding Service Establishment Charge

	Nonrecurring Charge[2]	USOC
- Per Connection	$400.00	MTEQF

(b) Q-Forwarding Network Assignment Charge

		Transport Payment Plan Rates			
	Nonrecurring Charge[2]	A 12-36 Mos	B 37-60 Mos	C 61-96 Mos	USOC
- Per Network, Per Connection	$ -	$ 65.00	$ 60.00	$ 55.00	MTEQN

10. VLAN Aggregation Feature[3] (T)

(a) VLAN Aggregation Service Establishment Charge

	Nonrecurring Charge[2]	USOC
- Per Connection	$400.00	MTEQE

(b) VLAN Aggregation Network Assignment Charge

		Transport Payment Plan Rates			
	Nonrecurring Charge[2]	A 12-36 Mos	B 37-60 Mos	C 61-96 Mos	USOC
- Per VLAN, Per Connection	$ -	$ 65.00	$ 60.00	$ 55.00	MTEQV

Note 1: Optional feature only available with a Premium Connection.

Note 2: This nonrecurring charge is applicable to service under a TPP arrangement.

Note 3: Optional feature only available with a Virtual Connection.

Material previously appearing on this page now appears on page(s) 71.13.1 of this section.

All BellSouth marks contained herein and as set forth in the trademarks and service marks section of the BellSouth Tariffs are owned by BellSouth Intellectual Property Corporation.

E7. SPECIAL ACCESS (A.K.A. BELLSOUTH SPA) SERVICE

E7.5 Rates and Charges (Cont'd)

E7.5.22 BellSouth Metro Ethernet Service (Cont'd)

B. Rates and charges for Transport Payment Plan (Cont'd)

11. CNM - Metro Ethernet Reporting Feature[1] (T)

(a) CNM - Metro Ethernet Reporting, Service Establishment Charge

	Nonrecurring Charge[2]	USOC
- Per Customer Account	$ 225.00	MTERE

(b) CNM - Metro Ethernet Reporting Charge

		Transport Payment Plan Rates			
		A	B	C	
	Nonrecurring Charge[2]	12-36 Mos	37-60 Mos	61-96 Mos	USOC
- Per Connection	$ -	$ 8.00	$ 6.00	$ 5.00	MTERC

(c) CNM - Metro Ethernet Reporting, Web Interface Charge

- First	-	-	-	-	MTER1
- Each Additional	65.00	18.00	15.00	13.00	MTERW

(d) CNM - Metro Ethernet Reporting, Security Card

	Nonrecurring Charge[2]	USOC
- Each	$ 200.00	MTERS

Note 1: Optional feature only available with a Premium or Virtual Connection.

Note 2: This nonrecurring charge is applicable to service under a TPP arrangement.

All BellSouth marks contained herein and as set forth in the trademarks and service marks section of the BellSouth Tariffs are owned by BellSouth Intellectual Property Corporation.

E7. SPECIAL ACCESS (A.K.A. BELLSOUTH SPA) SERVICE

E7.5 Rates and Charges (Cont'd)

E7.5.22 BellSouth Metro Ethernet Service (Cont'd)

B. Rates and charges for Transport Payment Plan (Cont'd)

12. Class of Service (CoS) Profile[1] (T)

(a) Real-Time CoS[2]

		Transport Payment Plan Rates			
	Nonrecurring Charge[3]	**A 12-36 Mos**	**B 37-60 Mos**	**C 61-96 Mos**	**USOC**
- 10%	$ -	$ 54.00	$ 54.00	$ 54.00	MTETF
- 20%	-	108.00	108.00	108.00	MTETG
- 25%	-	135.00	135.00	135.00	MTETH
- 30%	-	162.00	162.00	162.00	MTETJ
- 35%	-	189.00	189.00	189.00	MTETK
- 40%	-	216.00	216.00	216.00	MTETL
- 50%	-	270.00	270.00	270.00	MTETM
- 70%	-	378.00	378.00	378.00	MTETO

(b) Interactive CoS[2]

- 10%	-	45.00	45.00	45.00	MTEVF
- 20%	-	90.00	90.00	90.00	MTEVG
- 25%	-	112.00	112.00	112.00	MTEVH
- 30%	-	135.00	135.00	135.00	MTEVJ
- 35%	-	157.00	157.00	157.00	MTEVK
- 40%	-	180.00	180.00	180.00	MTEVL
- 50%	-	225.00	225.00	225.00	MTEVM

Note 1: Each Virtual Connection requires the designation of a CoS profile with desired percentages of each CoS selected. The sum of the percentages for all CoS selected for a Virtual Connection must sum to 100%..

Note 2: The combined CoS bandwidth percentages selected in a customer's Virtual Connection CoS profile for Real-Time CoS plus Interactive CoS may not exceed 50%, except where the customer selects the 70% Real-Time CoS bandwidth percentage and has no Interactive traffic.

Note 3: This nonrecurring charge is applicable to service under a TPP Arrangement.

All BellSouth marks contained herein and as set forth in the trademarks and service marks section of the BellSouth Tariffs are owned by BellSouth Intellectual Property Corporation.

E7. SPECIAL ACCESS (A.K.A. BELLSOUTH SPA) SERVICE

E7.5 Rates and Charges (Cont'd)

E7.5.22 BellSouth Metro Ethernet Service (Cont'd)

B. Rates and charges for Transport Payment Plan (Cont'd)

12. Class of Service (CoS) Profile[1] (Cont'd) (T)

(c) Business Critical CoS

	Nonrecurring Charge[2]	Transport Payment Plan Rates A 12-36 Mos	B 37-60 Mos	C 61-96 Mos	USOC
- 10%	$ -	$ 27.00	$ 27.00	$ 27.00	MTEPF
- 20%	-	54.00	54.00	54.00	MTEPG
- 25%	-	67.00	67.00	67.00	MTEPH
- 30%	-	81.00	81.00	81.00	MTEPJ
- 35%	-	94.00	94.00	94.00	MTEPK
- 40%	-	108.00	108.00	108.00	MTEPL
- 50%	-	135.00	135.00	135.00	MTEPM
- 60%	-	162.00	162.00	162.00	MTEPN
- 75%	-	202.00	202.00	202.00	MTEPP
- 90%	-	243.00	243.00	243.00	MTEPQ
- 100%	-	270.00	270.00	270.00	MTEPR
(d) Best Effort CoS					
- 10%	-	9.00	9.00	9.00	MTEBF
- 20%	-	18.00	18.00	18.00	MTEBG
- 25%	-	22.00	22.00	22.00	MTEBH
- 30%	-	27.00	27.00	27.00	MTEBJ
- 35%	-	31.00	31.00	31.00	MTEBK
- 40%	-	36.00	36.00	36.00	MTEBL
- 50%	-	45.00	45.00	45.00	MTEBM
- 60%	-	54.00	54.00	54.00	MTEBN
- 75%	-	67.00	67.00	67.00	MTEBP
- 90%	-	81.00	81.00	81.00	MTEBQ

Note 1: Each Virtual Connection requires the designation of a CoS profile with desired percentages of each CoS selected. The sum of the percentages for all CoS selected for a Virtual Connection must sum to 100%..

Note 2: This nonrecurring charge is applicable to service under a TPP Arrangement.

All BellSouth marks contained herein and as set forth in the trademarks and service marks section of the BellSouth Tariffs are owned by BellSouth Intellectual Property Corporation.

E7. SPECIAL ACCESS (A.K.A. BELLSOUTH SPA) SERVICE

E7.5 Rates and Charges (Cont'd)

E7.5.22 BellSouth Metro Ethernet Service (Cont'd)

B. Rates and charges for Transport Payment Plan (Cont'd)

13. Automatic Protection Switching (APS) Feature[1]: Selected to provide automatic protection switching in conjunction with a Basic, Premium or Virtual BellSouth Metro Ethernet Connection of 10 Mbps or higher. Applicable APS rate element based upon type of APS selected and actual total route miles[2] (rounded up to next whole mile) based upon a customer-specific design as determined by the Telephone Company. (T)

(a) Structural Protection

		Transport Payment Plan Rates			
	Nonrecurring Charge[3]	A 12-36 Mos	B 37-60 Mos	C 61-96 Mos	USOC
- Per APS Arrangement of less than 10 route miles	$ -	$ 1250.00	$ 1092.00	$ 935.00	MTEAO
- Per APS Arrangement of 10 through 25 route miles	-	1496.00	1301.00	1126.00	MTEA1
- Per APS Arrangement of greater than 25 through 35 route miles	-	1798.00	1679.00	1530.00	MTEA2
- Per APS Arrangement of greater than 35 through 50 route miles	-	2452.00	2376.00	2134.00	MTEA3

(b) Route Protection

- Per APS Arrangement of less than 10 route miles	-	1470.00	1285.00	1100.00	MTEA5
- Per APS Arrangement of 10 through 25 route miles	-	1760.00	1530.00	1325.00	MTEA6
- Per APS Arrangement of greater than 25 through 35 route miles	-	2115.00	1975.00	1800.00	MTEA7
- Per APS Arrangement of greater than 35 through 50 route miles	-	2885.00	2795.00	2510.00	MTEA8

14. Optical Termination Charge: An electrical termination on the customer premises is standard for 2, 4 and 8 Mbps Basic, Premium and Virtual Connections. Therefore, an Optical Termination Charge applies when an optional optical termination is requested and provided for a 2, 4 or 8 Mbps Connection. (T)

(a) Per Optical Termination

- Per Connection	-	30.00	30.00	30.00	MTEO1

15. Service Reconfiguration Charge (T)

(a) Per Request

	Nonrecurring Charge[3]	USOC
- Per Connection	$ 200.00	MTESR

16. System Reconfiguration Charge (T)

(a) Per Request

- Per Connection	900.00	MTESY

Note 1: Optional feature only available with a Basic, Premium or Virtual Connection.

Note 2: Per definition of route mileage provided in E7.2.18U preceding.

Note 3: This nonrecurring charge is applicable to service under a TPP arrangement.

All BellSouth marks contained herein and as set forth in the trademarks and service marks section of the BellSouth Tariffs are owned by BellSouth Intellectual Property Corporation.

E7. SPECIAL ACCESS (A.K.A. BELLSOUTH SPA) SERVICE

E7.6 ICB Rates and Charges (M)

Rates and charges for Special Access (a.k.a. BellSouth SPA) service provided on an individual case basis. (M)

E7.7 Custom Network (a.k.a. BellSouth Custom Network) Service

E7.7.1 General

Custom Network (a.k.a. BellSouth Custom Network) service is furnished to provide custom-designed IntraLATA Special Access (a.k.a. BellSouth SPA) service networks. Each network design is tariffed herein as a Custom Network Service Arrangement, and each is further identified with a roman numeral designation (e.g., Custom Network Service Arrangement I).

A Custom Network Service Arrangement is only available under a contractual payment period according to the regulations, terms and conditions specified herein.

The Special Access (a.k.a. BellSouth SPA) services provided in a Custom Network Service Arrangement are subject to the general regulations for service stated elsewhere in this Tariff, except where specified otherwise in a Custom Network Service Arrangement.

In order to subscribe to a Custom Network Service Arrangement, the IC or end user's network must meet the minimum requirements stated within that specific Custom Network Service Arrangement with regard to network design and size. The IC or end user must also agree to the terms and conditions stated therein.

E7.7.2 Custom Network Service Arrangement I

A. General

Custom Network Service Arrangement I is provided to furnish a large data network composed of Digital Data Access (a.k.a. BellSouth SPA DS0 Digital Data) service (may be referred to herein as digital data service).

This arrangement will provide the regulations, and rates and charges to allow the provisioning of a very large data network for the specified payment period.

The digital data service provided in Custom Network Service Arrangement I will be subject to the regulations in this Tariff which apply to Digital Data Access (a.k.a. BellSouth SPA DS0 Digital Data) service in this Section of this Tariff, except where stated otherwise herein.

B. Regulations

1. Custom Network Service Arrangement I is provided under a fixed five (5) year payment period and shall be administered in accordance with the regulations contained in the Channel Services Payment Plan, E2.4.9.A., except as follows:

   a. The IC or end user has the following options for service following the expiration of the five-year payment period:

      (1) The IC or end user may elect to enter into a new Custom Network Service Arrangement I payment agreement at the rates in effect herein for a new IC or end user at the time the contract service expires.

      (2) The IC or end user may elect that the network service revert back to the generally available Digital Data Access (a.k.a. BellSouth SPA DS0 Digital Data) service rates in this Section of this Tariff that are in effect at the time the contract service expires.

      (3) The IC or end user may elect that all Custom Network (a.k.a. BellSouth Custom Network) Service be disconnected at the expiration of the contract period. No Termination Liability Charges shall apply.

      (4) If the IC or end user does not elect (1), (2) or (3) preceding or does not notify the Company of their intentions prior to the time the contract service expires, service shall be continued at the monthly rates currently in effect for month-to-month Digital Data Access (a.k.a. BellSouth SPA DS0 Digital Data) service from this Section until notified otherwise by the IC or end user.

   b. The minimum size for a Custom Network Service Arrangement I shall be 600 digital data local channels located in the Company serving area in South Carolina. The IC or end user's data network may be less than the 600 digital data local channel minimum size upon electing to subscribe to Custom Network Service Arrangement I, however, the network size must grow to the 600 digital data local channel minimum by the first anniversary date (twelve months) and 700 digital data local channels by the second anniversary date (twenty-four months) of the signing of the payment agreement for Custom Network Service Arrangement I. The size of the data network shall remain a minimum of 700 digital data local channels for the remainder of the five-year payment period.

E7. SPECIAL ACCESS (A.K.A. BELLSOUTH SPA) SERVICE (T)

E7.7 Custom Network (a.k.a. BellSouth Custom Network) Service (Cont'd) (T)

E7.7.2 Custom Network Service Arrangement I (Cont'd)

B. Regulations (Cont'd)

1. (Cont'd)

b. (Cont'd)

The data network provided under Custom Network Service Arrangement I shall be reviewed annually on the anniversary date of the signing of the payment agreement for Custom Network Service Arrangement I. The purpose of each annual review will be to determine if the terms of Custom Network Service Arrangement I are being met and the data network minimum size has been satisfied.

(1) If the count of digital data local channels is the stated minimum or above on the anniversary date, the network minimum has been met.

(2) If the count of digital data local channels is less than the stated minimum on the anniversary date, the network minimum has not been satisfied and the IC or end user may no longer subscribe to Custom Network Service Arrangement I. Their network shall revert to the rates and regulations for Digital Data Access ***(a.k.a. BellSouth SPA DS0 Digital Data)*** service available in E7.5 of this Tariff. This shall not be considered as a disconnect of the IC's or end user's service and a Termination Liability Charge as described in (3) following shall not apply. (T)

(3) The disconnect or moves of Custom Network Service Arrangement I services (individual local and/or interoffice channels, hub terminations and/or associated optional features) inside the Company serving area in South Carolina during the Custom Network Service Arrangement I payment period shall be considered as partial disconnects of the network and shall not incur a Termination Liability Charge. A Termination Liability Charge shall apply only for the complete disconnect of all service within Custom Network Service Arrangement I (except as specified in (4) following) and shall be calculated as follows:

The Termination Liability Charge shall be equal to the appropriate monthly rates as specified herein Custom Network Service Arrangement I times the number of months remaining in the payment period, times the quantities of service in place at the time of disconnect. A minimum quantity of 600 digital data local channels shall be used in this calculation if the disconnect occurs prior to the end of the second year of this agreement and the actual number of digital data local channels at the time of disconnect is less than this stated network minimum; if the disconnect occurs after the second year of this agreement, a minimum of 700 digital data local channels shall be used in this calculation if the actual number of digital data local channels at the time of disconnect is less than this network minimum.

(4) A Termination Liability Charge as specified in (3) preceding shall apply for the complete disconnect of Custom Network Service Arrangement I unless both of the following conditions are met: 1) the disconnect occurs after Custom Network Service Arrangement I has been in-place for a minimum of twenty-four months and 2) if the IC or end user elects another Custom Network Service Arrangement for a period of time equal to or greater than the amount of time remaining in his Custom Network Service Arrangement I payment period. If these conditions are met, no Termination Liability Charge shall apply.

E7. SPECIAL ACCESS (a.k.a. BellSouth SPA) SERVICE (T)

E7.7 Custom Network (a.k.a. BellSouth Custom Network) Service (T)

E7.7.2 Custom Network Service Arrangement (Cont'd)

B. Regulations (Cont'd)

1. (Cont'd)

c. Nonrecurring charges specified in C. following do not apply for the conversion of digital data service in-place at the time the IC or end user establishes Custom Network Service Arrangement I. Termination Liability Charges shall not apply for the conversion of in-place digital data service that was being provided under a contractual payment period; however, no service credit will be given for the former contractual period. Requests for new service to be added to their network will be subject to the nonrecurring charges specified in C. following, except as follows:

- Nonrecurring charges specified in C. following shall not apply for new digital data service ordered during the first four months following the establishment of each IC or end user's Custom Network Service Arrangement I; specifically, nonrecurring charges will not apply when the service order application date falls within this four-month period and service is to be placed within the standard installation interval.

C. Rates and Charges

1. Digital Data Access ***(a.k.a. BellSouth SPA DS0 Digital Data)*** service[1] (T)

a. Local Channel

(1) Per Point of Termination

			Nonrecurring Charge		
		Monthly Rate	**First Service Installed**	**Additional Service Installed**	**USOC**
(a)	2.4 Kbps	**$45.00**	**$415.00**	**$135.00**	**T6ECS**
(b)	4.8 Kbps	**45.00**	**415.00**	**135.00**	**T6ECS**
(c)	9.6 Kbps	**45.00**	**415.00**	**135.00**	**T6ECS**
(d)	19.2 Kbps	**45.00**	**415.00**	**135.00**	**T6ECS**
(e)	56.0 Kbps	**56.00**	**415.00**	**135.00**	**T6ECS**
(f)	64.0 Kbps	**56.00**	**415.00**	**135.00**	**T6ECS**

Note 1: The monthly rates shown are for the fixed five-year payment period.

E7. SPECIAL ACCESS (A.K.A. BELLOSUTH SPA) SERVICE (T)

E7.7 Custom Network (a.k.a. BellSouth Custom Network) Service (T)

E7.7.2 Custom Network Service Arrangement I (Cont'd)

C. Rates and Charges (Cont'd)

1. Digital Data Access ***(a.k.a. BellSouth SPA DS0 Digital Data)*** service [1] (Cont'd) (T)

b. Hub Termination

(1) Per Local Channel

	Monthly Rate	Nonrecurring Charge First Service Installed	Nonrecurring Charge Additional Service Installed	USOC
(a) 2.4 Kbps	**$10.00**	**$61.00**	**$41.00**	**TUTA4**
(b) 4.8 Kbps	**10.00**	**61.00**	**41.00**	**TUTB4**
(c) 9.6 Kbps	**10.00**	**61.00**	**41.00**	**TUTC4**
(d) 19.2 Kbps	**10.00**	**61.00**	**41.00**	**TUTE4**
(e) 56.0 Kbps	**24.00**	**61.00**	**41.00**	**TUTD4**
(f) 64.0 Kbps	**24.00**	**61.00**	**41.00**	**TUTF4**

c. Interoffice Channel, 0 Miles

(1) Per channel

	Monthly Rate	Nonrecurring Charge	USOC
(a) 2.4, 4.8, 9.6 and 19.2 Kbps	**$-**	**$-**	**1L5XX**
(b) 56.0 and 64.0 Kbps	-	-	**1L5XX**

(2) Each mile or fraction thereof

(a) 2.4, 4.8, 9.6 and 19.2 Kbps	-	-	**1L5XX**
(b) 56.0 and 64.0 Kbps	-	-	**1L5XX**

Note 1: The monthly rates shown are for the fixed five-year payment period.

E7. SPECIAL ACCESS (A.K.A. BELLSOUTH SPA) SERVICE (T)

E7.7 Custom Network (a.k.a. BellSouth Custom Network) Service (T)

E7.7.2 Custom Network Service Arrangement I (Cont'd)

C. Rates and Charges (Cont'd)

1. Digital Data Access ***(a.k.a. BellSouth SPA DS0 Digital Data)*** service[1] (Cont'd) (T)

d. Interoffice Channel, Over 0 Miles

(1) Per channel

	Monthly Rate	Nonrecurring Charge	USOC
(a) 2.4, 4.8, 9.6 and 19.2 Kbps	**$18.00**	**$66.00**	**1L5XX**
(b) 56.0 and 64.0 Kbps	**31.00**	**66.00**	**1L5XX**
(2) Each mile or fraction thereof			
(a) 2.4, 4.8, 9.6 and 19.2 Kbps	**1.55**	**-**	**1L5XX**
(b) 56.0 and 64.0 Kbps	**3.10**	**-**	**1L5XX**
e. Optional Features			
(1) Bridging[2,3]			
(a) Per port (2.4, 4.8, 9.6, 19.2 and 56.0 Kbps)	**10.00**	**23.00**	**BCNDA**
(2) Secondary Channel Capabilities, Per Local Channel[2,3,4]			
(a) Each [2,3,4]	**10.00**	**240.00**	**SFS**

Note 1: The monthly rates shown are for the fixed five-year payment period.

Note 2: This option is not available with 64.0 Kbps.

Note 3: This option may not be available in all service locations.

Note 4: Nonrecurring charge is applicable only if Secondary Channel service is being added subsequent to the installation of basic service.

E7. SPECIAL ACCESS (A.K.A. BELLSOUTH SPA) SERVICE (T)

Cancellation Page (N)

The following pages have been cancelled. (N)

Page	Revision	Page	Revision	Page	Revision	
53	2	81	1	108	1	(N)
54	2	82	1	109	1	(N)
55	2	83	1	110	1	(N)
56	2	84	1	111	1	(N)
57	2	85	2	112	1	(N)
58	2	86	1	113	2	(N)
59	2	87	1	113.1	1	(N)
60	2	88	1	114	1	(N)
61	2	89	1	115	2	(N)
61.1	1	90	1	115.1	1	(N)
62	1	91	3	116	1	(N)
63	1	92	2	117	2	(N)
64	1	93	1	118	2	(N)
65	1	94	2	119	1	(N)
66	1	95	1	120	1	(N)
67	1	96	3			(N)
68	1	97	1			(N)
69	1	98	1			(N)
70	2	99	1			(N)
71	1	100	1			(N)
72	1	101	1			(N)
73	1	102	1			(N)
74	1	103	1			(N)
75	1	104	1			(N)
76	2	105	1			(N)
76.1	1	106	1			(N)
77	2	107	1			(N)
77.1	1					(N)
78	2					(N)
78.1	1					(N)
79	2					(N)
80	1					(N)

E8. (DELETED) (D)

CONTENTS

E8. (DELETED) (D)

CONTENTS

E8. (DELETED) (D)

E8. (DELETED) (D)

E8. (DELETED) (D)

E8. (DELETED) (D)

E8. (DELETED) (D)

E8. (DELETED) (D)

E8. (DELETED) (D)

E8. (DELETED) (D)

E8. (DELETED) (D)

E8. (DELETED) (D)

E8. (DELETED) (D)

E8. (DELETED) (D)

E8. (DELETED) (D)

E8. (DELETED) (D)

E8. (DELETED) (D)

E8. (DELETED) (D)

E8. (DELETED) (D)

E8. (DELETED) (D)

E8. (DELETED) (D)

E8. (DELETED) (D)

E8. (DELETED) (D)

E8. (DELETED) (D)

E8. (DELETED) (D)

E8. (DELETED) (D)

E8. (DELETED) (D)

E8. (DELETED) (D)

E8. (DELETED) (D)

E8. (DELETED) (D)

E8. (DELETED) (D)

E8. (DELETED) (D)

E8. (DELETED) (D)

E8. (DELETED) (D)

E8. (DELETED) (D)

E8. (DELETED) (D)

E8. (DELETED) (D)

E8. (DELETED) (D)

E8. (DELETED) (D)

E8. (DELETED) (D)

E8. (DELETED) (D)

E8. (DELETED) (D)

E8. (DELETED) (D)

E8. (DELETED) (D)

E8. (DELETED) (D)

E8. (DELETED) (D)

E8. (DELETED) (D)

E8. (DELETED) (D)

E8. (DELETED) (D)

E8. (DELETED) (D)

E8. (DELETED) (D)

E8. (DELETED) (D)

E8. (DELETED) (D)

E8. (DELETED) (D)

E8. (DELETED) (D)

E8. (DELETED) (D)

E8. (DELETED) (D)

E8. (DELETED) (D)

E8. (DELETED) (D)

E8. (DELETED) (D)

E8. (DELETED) (D)

E8. (DELETED) (D)

E8. (DELETED) (D)

E8. (DELETED) (D)

E8. (DELETED) (D)

E8. (DELETED) (D)

E8. (DELETED) (D)

E8. (DELETED) (D)

E8. (DELETED) (D)

E8. (DELETED) (D)

E8. (DELETED) (D)

E9. BELLSOUTH DIRECTORY ASSISTANCE ACCESS SERVICE

CONTENTS

E9.1	**General Description**	1	
E9.1.1	Provision Of Service	1	
E9.2	**Undertaking Of The Company**	1	
E9.2.1	Number Provision	1	
E9.2.2	Access Locations And Call Transport	1	
E9.3	**Obligations Of The Customer**	3	
E9.3.1	Ordering Requirements	3	
E9.3.2	End User Requirements	3	
E9.4	**Payment Arrangements**	4	
E9.4.1	Credit Allowance For BellSouth Directory Assistance Access Service	4	
E9.4.2	Reserved For Future Use	4	
E9.4.3	Minimum Periods	4	
E9.4.4	Cancellation Of A Special Order	4	
E9.4.5	Changes To Special Orders	4	
E9.4.6	Moves	4	
E9.4.7	BellSouth Directory Assistance Access Service Rearrangements	4	
E9.5	**Rate Regulations And Charges**	4.1	
E9.5.1	Rate Regulations	4.1	
E9.5.2	Rate Categories	4.1	
E9.5.3	Rates And Charges	4.1	
E9.6	**BellSouth Flat Rated DA Trunks**	7	(N)
E9.6.1	General Description	7	(N)
E9.6.2	Service Requirements	7	(N)
E9.6.3	Rates and Charges	7	(N)

E9. BELLSOUTH DIRECTORY ASSISTANCE ACCESS SERVICE (T)

E9.1 General Description

E9.1.1 Provision of Service

A. The Company will provide ***BellSouth Directory Assistance*** Access service to a customer from ***BellSouth Directory Assistance Access*** service locations. (T)

B. ***BellSouth Directory Assistance*** Access service provides: (1) ***BellSouth Directory Assistance Access*** service to ***BellSouth Directory Assistance Access*** service locations; (2) the use of ***BellSouth Directory Assistance Access*** service equipment; and (3) the use of ***BellSouth Directory Assistance Access*** operators to provide telephone numbers. (T)

E9.2 Undertaking of the Company

E9.2.1 Number Provision

A. A Company ***Directory Assistance*** operator, when furnished a name and locality will provide or attempt to provide the telephone number listed in the Company ***Directory Assistance*** records associated with the name given at the rates and charges as set forth in E9.5 following. The Company's contact with the customer's end user shall be limited to that effort necessary to process a customer's end user's request for a telephone number. The Company will not transfer, forward or redial a customer's end user call to any other location for any purpose other than provision of ***BellSouth Directory Assistance*** Access service. (T) (T)

B. A maximum of two (2) requests for telephone numbers will be accepted per call to the ***BellSouth Directory Assistance Access*** operator. (T)

C. A telephone number which is not listed in ***BellSouth Directory Assistance Access*** records will not be available to the customer's end user.

E9.2.2 Access Locations and Call Transport (T)

A. The Company will specify the ***BellSouth Directory Assistance Access*** service location which provides the ***BellSouth Directory Assistance*** Access service for each Numbering Plan Area Code (NPA). The ***BellSouth Directory Assistance Access*** service locations are as shown in National Exchange Carrier Association, Inc. Tariff FCC No. 4. (T)

When it becomes necessary, as determined by the Company, to change a ***BellSouth Directory Assistance Access*** service location, the Company will notify the involved customer six months prior to the change. For such changes, the regulations as set forth in E2.1.7 preceding apply. (T)

B. ***BellSouth Directory Assistance*** Access service will be provided between the customer premises and the ***BellSouth Directory Assistance Access*** service location by the Company at rates and charges as set forth in E9.5 following, and as follows: (T)

When the access tandem switch is appropriately equipped for ***BellSouth Directory Assistance Access*** measurement, the Company will route all ***BellSouth Directory Assistance Access*** traffic to the ***BellSouth Directory Assistance Access*** location for completion over the customer's ***BellSouth SWA*** services provided from the access tandem. Additionally, as set forth in Section E6. preceeding and in 1. and 3. following, direct connections to ***BellSouth Directory Assistance Access*** may be required. If a customer delivers a ***BellSouth Directory Assistance Access*** call to the Company, the Company will complete the call at charges as set forth in E9.5 following. (T)

1. General

   a. Each ***BellSouth Directory Assistance*** Access service will consist of the following: (T)

      (1) An Interface Group equipped with an available Premises Interface Code at the customer's premises.

      (2) Directory Transport between the premises of the ordering customer and the ***BellSouth Directory Assistance Access*** service location. (T)

   b. When required by the Company, a separate ***BellSouth Directory Assistance*** Access service trunk group will be provided for ***BellSouth Directory Assistance*** Access service for each NPA. Separate trunk groups will be required when the Company notifies the customer that the mechanized search of its data base and its mechanized operator practices require a mechanized identification of the NPA code for which the customer's end user desires ***BellSouth Directory Assistance Access*** information. (T)

   c. Further, when an access tandem is available and is provided, the ***BellSouth Directory Assistance*** Access service will be provided, at Company choice, either as a separate ***BellSouth Directory Assistance*** Access service trunk group or in combination with ***BellSouth SWA FGB***, ***BellSouth SWA FGC***, ***BellSouth SWA FGD*** or ***BellSouth SWA*** TSBSA service.

E9. BELLSOUTH DIRECTORY ASSISTANCE ACCESS SERVICE

E9.2 Undertaking of the Company (Cont'd)

E9.2.2 Access Locations and Call Transport (Cont'd)

B. (Cont'd)

2. Interface Group and Premises Interface Code

a. All Interface Groups as set forth in E6.1.3.A.1. ***of this Tariff*** are available for BellSouth Directory Assistance Access service. When only BellSouth Directory Assistance Access service is provided, only the following Premises Interface Codes are available. (T)

4DS9-15	6EA2-E	4RV2-0
4D56-44	6EA2-M	2RV3-0
	4SF3	

b. Such Premises Interface Codes are described in E6.1.3.A.1. ***of this Tariff.*** When BellSouth Directory Assistance Access service is provided with BellSouth SWA FGB, BellSouth SWA FGC, BellSouth SWA FGD or BellSouth SWA TSBSA service, the Premises Interface Code for the combination will be the available Premises Interface Code provided for the BellSouth SWA FGB, BellSouth SWA FGC, BellSouth SWA FGD or BellSouth SWA TSBSA service ordered by the customer. (T)

c. Except as set forth in E9.4.5 following, the Interface Groups and Premises Interface Codes provided under a Special Order for BellSouth Directory Assistance Access service are subject to the order conditions as set forth in Section E5. ***of this Tariff.*** For purpose of applying the order regulations, a BellSouth Directory Assistance Access service location is considered to be a customer's end user serving wire center. (T)

3. Directory Transport

a. Directory Transport provides the transmission facilities and transport termination between the premises of the ordering customer and the BellSouth Directory Assistance Access service location. For purposes of determining Directory Transport mileage, distance will be measured from the wire center that normally serves the customer premises to the BellSouth Directory Assistance Access service location(s).

b. Directory Transport is a two-way voice frequency transmission path composed of BellSouth SWA Transport facilities as set forth in E6.1.3 ***of this Tariff.*** The two-way voice frequency path transports calls in the terminating direction (from the premises of the customer to the BellSouth Directory Assistance Access service location). The voice frequency transmission path may be comprised of any form or configuration of plant capable of and typically used in the telecommunications industry for the transmission of voice and associated telephone signals within the frequency band width of approximately 300 to 3000 Hz. (T)

c. Directory Transport facilities are specified by the customer and include the following rate categories. These rate categories are further defined in Section E6. ***of this Tariff***, BellSouth SWA Service. (T)

(1) Switched Local Channel must be specified by the customer. This facility is used in the transport of the BellSouth Directory Assistance Access service call from the customer's premises to the Company's Serving Wire Center (SWC). The Switched Local Channel is assessed a monthly rate based on capacity.

(2) Switched Interoffice Channel, either Common or Dedicated must be specified by the customer.

Switched Dedicated Interoffice Channels (SW DIOC) are used for the transport of the BellSouth Directory Assistance Access service call to the BellSouth Directory Assistance Access location without utilizing an Access Tandem Switch or for the transport of the call to the Access Tandem where ***an*** Access Tandem ***is utilized.*** The SW DIOC is assessed a monthly rate, per mile, based on the capacity ordered by the customer. (C)

Where a Company Access Tandem is utilized, Switched Common Interoffice Channels (SW CIOC) are used for the transport of the BellSouth Directory Assistance Access service call ***from*** the ***Company's Access Tandem to the*** BellSouth Directory Assistance Access location. The SW CIOC charge is assessed on a per call basis, and a per call mile basis. (C)

For BellSouth SWA Common Transport, the DS3 to DS1 Multiplexer element is applicable. This element provides for use of DS3 to DS1 multiplexer equipment between the Company Access tandem switch and the BellSouth Directory Assistance Access Location. (N)

(3) Access Tandem Switching provides for the function of the Access Tandem when routing the call from the customer's SWC to the BellSouth Directory Assistance Access location through the Access Tandem Switch. A rate per call will be assessed for each BellSouth Directory Assistance Access service call that traverses the Access Tandem.

E9. BELLSOUTH DIRECTORY ASSISTANCE ACCESS SERVICE (T)

E9.2 Undertaking of the Company (Cont'd)

E9.2.2 Access Locations and Call Transport (Cont'd)

B. (Cont'd)

3. Directory Transport (Cont'd)

   d. As specified by the customer, ***BellSouth Directory Assistance Access*** service is to be routed directly to a ***BellSouth Directory Assistance Access*** service location or through an access tandem switch appropriately equipped for ***BellSouth Directory Assistance Access*** measurement and served by ***BellSouth Directory Assistance Access*** trunks to the ***BellSouth Directory Assistance Access*** location when such an access tandem switch is available in combination with ***BellSouth SWA*** FGB, ***BellSouth SWA*** FGC, ***BellSouth SWA*** FGD or ***BellSouth SWA*** TSBSA or as a separate ***BellSouth Directory Assistance*** Access service Trunk Group. The combination of ***BellSouth SWA FGB***, ***BellSouth SWA FGC***, ***BellSouth SWA FGD*** or ***BellSouth SWA*** TSBSA service with ***BellSouth Directory Assistance*** Access service will only be provided at such available and appropriately equipped access tandem switches. All ***BellSouth Directory Assistance Access*** calls routed via this combination to the access tandem will be completed to the ***BellSouth Directory Assistance Access*** location and subject to the charges set forth in E9.5 following. If the customer does not want ***BellSouth Directory Assistance Access*** calls completed to the ***BellSouth Directory Assistance Access*** location via this combination, the customer may block the call. (T)

   e. When Directory Transport is provided, multifrequency address signaling is required with wink start-start pulsing signals provided. The customer shall address each call to the ***BellSouth Directory Assistance Access*** service location using NPA+555+1212. Only NPA codes handled by the ***BellSouth Directory Assistance Access*** service location will be processed. (T)

   f. Directory Transport is provided with one of the ***BellSouth SWA*** Transport Interface Groups as set forth in Section E6. preceding. (T)

4. Special Facilities Routing

   A customer may request that ***BellSouth Directory Assistance*** Access service be provided via Special Facilities Routing. The regulations, rates and charges for Special Facilities Routing (Avoidance, Diversity and Cable Only) are as set forth in Section E11. following. (T)

5. Design Layout Report

   The Company will provide to the customer the makeup of the facilities and services provided under this section as ***BellSouth Directory Assistance*** Access service.This information will be provided in the form of a Design Layout Report similar to that as set forth in E6.1.4. Design Layout Reports for ***BellSouth Directory Assistance*** Access service will be provided only when specifically requested by the customer. The Design Layout Report will be provided to the customer at no charge, and will be reissued or updated whenever the facilities provided for the customer's use are materially changed. (T)

6. Transmission Specifications

   BellSouth Directory Assistance Access service is provided with either Type A, B or C Transmission Specifications. The specifications associated with these parameters are guaranteed to the ***BellSouth Directory Assistance Access*** service location whether routed directly or via an access tandem. Type C Transmission Specification is provided with Interface Group 1 when routed directly to a ***BellSouth Directory Assistance Access*** service location. Type B Transmission Specification is provided with Interface Groups 2, 6 and/or 9 when routed directly to a ***BellSouth Directory Assistance Access*** service location. Type A Transmission Specification is provided with Interface Groups 2, 6 and/or 9 when routed via an access tandem. (T)

E9. BELLSOUTH DIRECTORY ASSISTANCE ACCESS SERVICE (T)

E9.2 Undertaking of the Company (Cont'd)

E9.2.2 Access Locations and Call Transport (Cont'd)

B. (Cont'd)

6. Transmission Specifications (Cont'd)

When ***BellSouth Directory Assistance*** Access service is provided with ***BellSouth SWA FGD*** or ***BellSouth SWA*** TSBSA 3 service, Type A Transmission Specification is provided. When ***BellSouth Directory Assistance*** Access service is provided with ***BellSouth SWA FGB*** or ***BellSouth SWA*** TSBSA 1 service, Type B Transmission Specification is provided for Interface Groups 2, 6 and/or 9 and Type C Transmission Specification is provided for Interface Group 1. When ***BellSouth Directory Assistance*** Access service is provided with ***BellSouth SWA FGC*** or ***BellSouth SWA*** TSBSA 2 service, Type B Transmission Specification is provided. (T)

Type A, B and C Transmission Specifications are set forth in E6.4.1 preceding.

7. Acceptance Testing and Testing Capabilities

The acceptance testing and testing capabilities for ***BellSouth Directory Assistance*** Access service traffic routed through an access tandem are the same as those for the associated ***BellSouth SWA FGB***, ***BellSouth SWA FGC***, ***BellSouth SWA FGD*** or ***BellSouth SWA*** TSBSA end office switching. The acceptance testing for ***BellSouth Directory Assistance*** Access service traffic routed directly to or routed in a separate trunk group through an access tandem to the ***BellSouth Directory Assistance Access*** service location, will be as set forth in E6.1.6 preceding. The testing capabilities for ***BellSouth Directory Assistance Access*** service traffic routed directly to or routed in a separate trunk group through an access tandem to the ***BellSouth Directory Assistance Access*** service location will be as set forth for cooperative scheduled testing or manual scheduled testing in Section E13. following. (T)

C. Trunk-side switching is provided at the ***BellSouth Directory Assistance*** Access service location. The ***BellSouth Directory Assistance*** Access service access location will provide trunk answer and disconnect supervisory signaling. (T)

D. The Company will distribute the calls received over the ***BellSouth Directory Assistance*** Access services to the ***BellSouth Directory Assistance Access*** Operators using the ***BellSouth Directory Assistance A***ccess service location equipment. (T)

E. In the event that the telephone number is unavailable to the ***BellSouth Directory Assistance Access*** Operator, no credit applies for the charge for the call to the ***BellSouth Directory Assistance Access*** Operator. When the ***BellSouth Directory Assistance Access*** service location or ***BellSouth Directory Assistance Access*** Operator equipment or terminals are out of service due to a Company equipment failure, or an incorrect number is provided, a credit as set forth in E9.4.1 following will apply. (T) (T)

F. ***BellSouth Directory Assistance*** Access service may be provided at the option of the customer for interstate and intrastate communications. When the customer requests such mixed access, the intrastate ***BellSouth Directory Assistance*** Access service charges will be determined by the Company using data furnished by the customer as set forth in E2.3.10 preceding.

E9.3 Obligations of the Customer

E9.3.1 Ordering Requirements (T)

A. The customer shall order the capacity and interface type of ***BellSouth Directory Assistance*** Access service it needs except when provided over existing ***BellSouth SWA*** FGA, ***BellSouth SWA*** FGB, ***BellSouth SWA*** FGC, ***BellSouth SWA*** FGD, ***BellSouth SWA*** LSBSA or ***BellSouth SWA*** TSBSA Transport facilities, as specified in E9.2.2 preceding.

B. The customer facilities at the premises of the ordering customer shall provide the necessary on-hook and off-hook supervision. (T)

C. When requested by the Company, the customer shall order a separate trunk group for ***BellSouth Directory Assistance*** Access service for each NPA. The conditions when the customer will be requested to order separate trunk groups for each NPA are set forth in E9.2.2.

E9.3.2 End User Requirements (T)

A. When the customer bills its end users, the customer shall be responsible for all contacts and arrangements with its end users concerning the provision and maintenance of ***BellSouth Directory Assistance*** Access service, and the billing and collecting of charges for ***BellSouth Directory Assistance ess*** Access services furnished to its end users. (T)

B. The customer understands that ***BellSouth Directory Assistance Access*** Operators will respond to two (2) telephone number requests per call and will not transfer, forward or redial the call to another location for any purpose other than the provision of ***BellSouth Directory Assistance*** Access service.

E9. BELLSOUTH DIRECTORY ASSISTANCE ACCESS SERVICE (T)

E9.4 Payment Arrangements

E9.4.1 Credit Allowance for BellSouth Directory Assistance Access Service (T)

A. When the ***BellSouth Directory Assistance Access*** service location or ***BellSouth Directory Assistance Access*** Operator equipment or terminals are out of service due to a Company equipment failure or an incorrect number is provided and a customer ***BellSouth Directory Assistance Access*** call has been connected to a ***BellSouth Directory Assistance Access*** Operator position a credit allowance equal to the amounts charged for a ***BellSouth Directory Assistance*** Access service Call as set forth in E9.5 following will apply. (T)

B. In addition to the credit as set forth in A. preceding, when a ***BellSouth Directory Assistance Access*** Operator or ***BellSouth Directory Assistance Access*** equipment provides an incorrect number for a call and the customer reports such occurrences to the Company, a credit allowance for such ***BellSouth Directory Assistance Access*** call will apply. When the customer reports such a call and the number requested, the number provided and the reason the number provided is incorrect, the number of calls for which a credit will apply will be developed by the Company in cooperation with the customer. The credit allowance is equal to the amounts charged for ***BellSouth Directory Assistance Access*** service call as set forth in E9.5.3 following. (T)

C. When a ***BellSouth Directory Assistance Access*** call is not completed due to the failure of ***BellSouth Directory Assistance Access*** service to ***BellSouth Directory Assistance Access*** locations, ***BellSouth Directory Assistance Access*** equipment or ***BellSouth Directory Assistance Access*** Operator activities, a credit allowance for the Switched Access service portion in the originating LATA of such ***BellSouth Directory Assistance Access*** call will apply. When the customer reports such a call and ***BellSouth Directory Assistance Access*** number dialed, time of the call and the date of the call, the number of calls for which a credit will apply will be developed by the Company in cooperation with the customer. The credit allowance is equal to the amounts charged for ***BellSouth Directory Assistance Access*** service call as set forth in E9.5.3 following. (T)

E9.4.2 Reserved for Future Use

E9.4.3 Minimum Periods

A. The minimum period for which ***BellSouth Directory Assistance*** Access service is provided and for which charges apply is one month. (T)

When ***BellSouth Directory Assistance*** Access service is provided with a customer's ***BellSouth SWA FGA***, ***BellSouth SWA FGB***, ***BellSouth SWA FGC***, ***BellSouth SWA FGD***, ***BellSouth SWA*** LSBSA or ***BellSouth SWA*** TSBSA service, the minimum period requirements apply to the Switched Access service provided and are set forth in E6.7.2 preceding. (T)

E9.4.4 Cancellation of a Special Order

A. When a customer cancels a Special Order for ***BellSouth Directory Assistance*** Access service after the order date but prior to the start of service, the appropriate charges as set forth in Section E5. preceding for ***BellSouth SWA*** Transport services apply for ***BellSouth Directory Assistance*** Access service cancelled. (T)

E9.4.5 Changes to Special Orders

When a customer requests changes to a pending order for ***BellSouth Directory Assistance*** Access service, such changes will be undertaken if they can be accommodated by the Company. The appropriate charges as set forth in Section E5. preceding for ***BellSouth SWA*** Transport services apply for the ***BellSouth Directory Assistance*** Access service changed. (T)

E9.4.6 Moves

A move involves a change in the physical location of the point of termination at the customer premises or of the customer premises. Moves will be treated as set forth in E6.7.7 preceding and all associated nonrecurring charges will apply. Minimum period requirements will be established at the new location as set forth in E6.7.7 preceding. The customer will also remain responsible for satisfying all outstanding minimum period charges for the discontinued service.

E9.4.7 BellSouth Directory Assistance Access service Rearrangements (T)

Nonrecurring charges apply for service rearrangements. service rearrangements are as set forth in E6.7.1 preceding. The service Rearrangement Charges are as set forth in E6.7.1 for the type of change provided by the Company.

E9. BELLSOUTH DIRECTORY ASSISTANCE ACCESS SERVICE

E9.5 Rate Regulations and Charges

E9.5.1 Rate Regulations

A. The BellSouth Directory Assistance Access service call charge, as set forth in E9.5.3 following, applies for each call to BellSouth Directory Assistance Access service. A call is a call, which has been connected to a BellSouth Directory Assistance Access Operator position. The charge applies whether or not the BellSouth Directory Assistance Access Operator provides the requested telephone number. The number of calls connected to BellSouth Directory Assistance Access operators will be accumulated by Company measuring equipment. A credit for the provision of an incorrect telephone number will be applied as set forth in E9.4.1 preceding.

B. The mileage for Directory Transport will be measured as set forth in E6.7.13 of this Tariff. Title Page notwithstanding, these two wire centers may be in different LATAs.

C. The charges for Directory Transport, are as set forth in E9.5.2 following.

E9.5.2 Rate Categories

A. There are three (3) rate categories which apply to BellSouth Directory Assistance Access service:

- Directory Transport
- BellSouth Directory Assistance Access Service Call
- BellSouth Directory Assistance Access Interconnection

Additionally, nonrecurring charges may be applicable as specified in E9.5.3 following.

1. Directory Transport - The Directory Transport rate category provides for the transport facilities and termination between the Customers premises and the BellSouth Directory Assistance Access location. These rate elements are defined in E9.2.2 preceding.
2. BellSouth Directory Assistance Access Service Call - The BellSouth Directory Assistance Access service Call rate category provides for the use of the Company BellSouth Directory Assistance Access operators and BellSouth Directory Assistance Access equipment.
3. BellSouth Directory Assistance Access Interconnection - The BellSouth Directory Assistance Access Interconnection rate category provides for switching capability and network functions not assigned to other BellSouth Directory Assistance Access service rate categories. This charge is assessed to all customers and is applied on a per BellSouth Directory Assistance Access call basis.

   Nonrecurring charges will apply for the installation of features, directory transport facilities, as defined in E9.2.2 preceding, or service rearrangements.

E9.5.3 Rates and Charges

A. Rates and charges for BellSouth Directory Assistance Access service are set forth following

1. BellSouth Directory Assistance Access Service call

		Rate	USOC	
(a)	Each	**$ .25**	**NA**	

2. Directory Transport

(a)	Switched Local Channel[1]	**-**	**NA**	
(b)	BellSouth SWA Dedicated Transport[1]	**-**	**NA**	
(c)	BellSouth SWA Common Transport per BellSouth Directory Assistance Access Service Call	**.000120**	**NA**	(R)
(d)	BellSouth SWA Common Transport per BellSouth Directory Assistance Access Service Call Mile	**.000013**	**NA**	(R)
(e)	Access Tandem Switching per BellSouth Directory Assistance Access Service Call	**.000247**	**NA**	(R)
(f)	BellSouth Directory Assistance Access Interconnection per BellSouth Directory Assistance Access Service Call	**.000000**	**NA**	
(g)	DS3 to DS1 Multiplexer per DA Access Service Call	**.000129**	**NA**	(R)
(h)	Installation[1]	**-**	**NA**	

Note 1: Nonrecurring and monthly rates are as specified for BellSouth SWA Transport in E6.8.1 of this Tariff.

E9. BELLSOUTH DIRECTORY ASSISTANCE ACCESS SERVICE (T)

E9. BELLSOUTH DIRECTORY ASSISTANCE ACCESS SERVICE (T)

E9. BELLSOUTH DIRECTORY ASSISTANCE ACCESS SERVICE

E9.6 BellSouth Flat Rated DA Trunks (N)

E9.6.1 General Description (N)

BellSouth Flat Rated DA Trunks provide the means to interconnect a customer's high capacity facility or facilities (e.g., DS1, MegaLink®, LightGate®, SmartPath® or SMARTRing®) at a DS1 level to the network location of their directory assistance provider. (N)

A. BellSouth Flat Rated DA Trunks have the same transmission specifications as do BellSouth SWA FGD trunks, as described in E6.2.4 of this tariff. (N)

B. BellSouth Flat Rated DA Trunks are made available in the following types: (N)

Type 1: Supports bi-directional transport of customer calls using CCS7 signaling to provide call return, (N)

Type 2: Supports unidirectional transport of customer calls using CCS7 signaling, and (N)

Type 3: Supports unidirectional transport of customer calls using MF signaling. (N)

C. Rates and charges for BellSouth Flat Rated DA Trunks are as detailed in E9.6.3, following. (N)

E9.6.2 Service Requirements (N)

A. BellSouth Flat Rated DA Trunks must be interconnected with a customer's high capacity facility or facilities (i.e., DS1, MegaLink®, LightGate®, SmartPath® or SMARTRing®) at a DS1 level in order that BellSouth Flat Rated DA Trunks function properly. Any combination of twenty-four (24) Flat Rated DA Trunk Types 1, 2 and 3 can be ordered to meet this requirement. If the customer requires more that twenty-four (24) Flat Rated DA Trunks, additional trunks must be ordered in increments of twenty-four (24). (N)

B. The Telephone Company will specify network locations from which BellSouth Flat Rated DA Trunks are made available as shown in NATIONAL EXCHANGE CARRIER ASSOCIATION, INC. TARIFF F.C.C. No.4. (N)

C. When ordering BellSouth Flat Rated DA Trunks, the customer must submit to the Telephone Company a Connecting Facility Assignment (CFA) identifying which and/or what part of the customer's high capacity facility and/or facilities are to be interconnected to the Telephone Company's BellSouth Flat Rated DA Trunks. Any subsequent change of Connecting Facilities Assignment (CFA) affecting interconnection with BellSouth Flat Rated DA Trunks must also be submitted to the Telephone Company. (N)

E9.6.3 Rates and Charges (N)

A. The following rates apply to BellSouth Flat Rated DA Trunks. (N)

1. Flat Rated DA Trunks (N)

		Monthly Rate	Nonrecurring Charges First Trunk Installed	Nonrecurring Charges Each Add'l Trunk	USOC	
(a)	Type 1	**$ 6.00**	**$ 24.00**	**$ 20.00**	**WDAT1**	(N)
(b)	Type 2	**6.00**	**24.00**	**20.00**	**WDAT2**	(N)
(c)	Type 3	**6.00**	**24.00**	**20.00**	**WDAT3**	(N)

E10. LATA CONFIGURATIONS (C)

CONTENTS

E10.1 (DELETED) 1
E10.2 (DELETED) 1
E10.3 LATAs 1
E10.3.1 LATA Configurations 1
E10.3.2 Charleston 1
E10.3.3 Columbia 1
E10.3.4 Florence 2
E10.3.5 Greenville 2
E10.3.6 Augusta, Ga. 2.1
E10.3.7 Charlotte, N.C. 2.2
E10.3.8 Savannah, Ga. 2.2
E10.3.9 Wilmington, N.C. 2.2
E10.4 (DELETED) 3
E10.5 (DELETED) 6

E10. LATA CONFIGURATIONS (C)

E10.1 (DELETED) (D)

E10.2 (DELETED) (D)

E10.3 LATAS

E10.3.1 LATA Configurations

A LATA is a geographical area in which Access Service is provided.

LATAs and the exchanges contained therein are listed following in alphabetical order.

E10.3.2 Charleston

The following exchanges are included in the Charleston LATA

Awendaw	Huger	Mount Pleasant
Beaufort	Isle of Palms	Pineville
Bonneau	Jamestown	Ridgeland
Charleston	Laurel Bay	St. Stephen
		St. Helena Island (N)
Cottageville	Lebanon	Sullivan's Island
Cross	Lodge	Summerville
Edisto Island	Macedonia	Walterboro
Folly Beach	McClellanville	Walterboro Rural
Hendersonville	Moncks Corner	Williams
Hollywood		Yemassee

E10. LATA CONFIGURATIONS (C)

E10.3 LATAS (Cont'd)

E10.3.3 Columbia

The following exchanges are included in the Columbia LATA

Allendale	Eutawville	Oakland
Bamberg	Fairfax	Olar
Barnwell	(DELETED) (D)	Orangeburg
Batesburg	Gilbert	Pelion
Bishopville	Great Falls	Pinewood
Bishopville Rural	Hampton	Pocalla
Blackville	Harleyville	Pond Branch
Bowman	Holly Hill	Prosperity
Branchville		Ridge Spring
Camden	Lewisville	Ridgeway
Cameron	Lexington	St. George
Chapin - Little Mtn. - North	Lynchburg	St. Matthews
Chapin - Little Mtn. - South	Manning	Santee
Chester	Mayesville	Shawview Heights
Columbia	Newberry	Springfield - Salley
Creston	North	Stateburg
Denmark	North Manning	Summerton
East Sumter	North Summerton	Sumter
Eastover	North Sumter	Swansea
	Norway	Wagener
Ehrhardt		Whitmire
Elloree		Williston
Estill (T)		Winnsboro

E10. LATA CONFIGURATIONS (C)

E10.3 LATAS (Cont'd)

E10.3.4 Florence

The following exchanges are included in the Florence LATA

Andrews	Jefferson	North Myrtle Beach
Aynor	Johnsonville	Olanta
Bennettsville	Kingstree	Pageland
Bethune	Lake City	Pamplico
Blenheim	Lakeview	Patrick
	Lakewood	Pawley's Island
Cheraw	Lamar	
Chesterfield	Lane	Ruby
Clio	Latta	
Collins Creek (N)	Little River (N)	
	Long Bay (N)	
Conway	Loris	Scranton
Darlington	Marion	Society Hill
Dillon	McBee	South Conway
East Conway	McColl	Timmonsville
Florence	Mullins	Turbeville
Floyds	Murrells Inlet	Wampee
Georgetown	Myrtle Beach	West Andrews
Greeleyville	Nichols	West Myrtle Beach (N)
Hartsville	North Conway	
Hemingway	North Kingstree	

E10. LATA CONFIGURATIONS (C)

E10.3 LATAS (Cont'd)

E10.3.5 Greenville

The following exchanges are included in the Greenville LATA

Abbeville	Greenville	Piedmont
Anderson	Greenwood	Plum Branch
Belton	Greer	Salem
Blacksburg	Hickory Taverns	Saluda
Blue Ridge	Hodges	Seneca
Calhoun Falls	Honea Path	Simpsonville
Campobello	Inman	Six Mile
	Iva (N)	
Central	Joanna	Spartanburg
Chappells	Jonesville	Starr (T)
Chesnee	Landrum	Travelers Rest
Clarks Hill	Laurens	Troy
Clemson	Laurens Rural	Tryon, N.C.
Clinton	Liberty	Union
Columbus, N.C.	Lockhart	Walhalla
Cowpens	Lyman	Ware Shoals
Cross Hill	McCormick	Waterloo
Due West	Mount Carmel	West Abbeville (T)
Easley	Mountville	West End (T)
Enoree	Ninety Six	Westminster
Fountain Inn	Pacolet	Williamston
Gaffney	Pelzer	Woodruff
Gray Court	Pendleton	
Green Creek, N.C.	Pickens	

E10.3.6 Augusta, Ga.

The following exchanges are included in the Augusta, Ga., LATA

Aiken	Edgefield	Johnston
Bath	Graniteville	New Ellenton
Beech Island	Jackson	North Augusta

E10. LATA CONFIGURATIONS (C)

E10.3 LATAS (Cont'd)

E10.3.7 Charlotte, N.C.

The following exchanges are included in the Charlotte, N.C., LATA

Antioch	Hickory Grove	Mill Creek
Charlotte (N)		
Clover	Kershaw	Rock Hill
Fort Lawn	Lake Wylie	Sharon
Fort Mill	Lancaster	South Crowders Creek
Heath Springs		York

E10.3.8 Savannah, Ga.

The following exchanges are included in the Savannah, Ga., LATA

Bluffton	Hilton Head (T)	Pritchardville (N)
Hardeeville (T)	Moss Creek (N)	

E10.3.9 Wilmington, N.C.

The following exchange is included in the Wilmington, N.C., LATA

Newtonville (N)	Rockingham (N)	Scotts Hill (N)
Pembroke (N)	Rowland	

E10. LATA CONFIGURATIONS (C)

E10.4 (DELETED) (D)

E10. LATA CONFIGURATIONS (C)

E10.4 (DELETED) (D)

E10. LATA CONFIGURATIONS (C)

E10.4 (DELETED) (D)

E10. LATA CONFIGURATIONS (C)

E10.5 (DELETED) (D)

Material formerly appearing on this page may now be found in the National Exchange Carrier Association, Inc., Tariff F.C.C. No. 4. (N)

E10. LATA CONFIGURATIONS (C)

Material formerly appearing on this page may now be found in the National Exchange Carrier Association, Inc., Tariff F.C.C. No. 4. (N)

E10. LATA CONFIGURATIONS (C)

Material formerly appearing on this page may now be found in the National Exchange Carrier Association, Inc., Tariff F.C.C. No. 4. (N)

E10. LATA CONFIGURATIONS (C)

Material formerly appearing on this page may now be found in the National Exchange Carrier Association, Inc., Tariff F.C.C. No. 4. (N)

E10. LATA CONFIGURATIONS (C)

Material formerly appearing on this page may now be found in the National Exchange Carrier Association, Inc., Tariff F.C.C. No. 4. (N)

E10. LATA CONFIGURATIONS (C)

Material formerly appearing on this page may now be found in the National Exchange Carrier Association, Inc., Tariff F.C.C. No. 4. (N)

E10. LATA CONFIGURATIONS (C)

Material formerly appearing on this page may now be found in the National Exchange Carrier Association, Inc., Tariff F.C.C. No. 4. (N)

E10. LATA CONFIGURATIONS (C)

Material formerly appearing on this page may now be found in the National Exchange Carrier Association, Inc., Tariff F.C.C. No. 4. (N)

E10. LATA CONFIGURATIONS (C)

Material formerly appearing on this page may now be found in the National Exchange Carrier Association, Inc., Tariff F.C.C. No. 4. (N)

E10. LATA CONFIGURATIONS (C)

Material formerly appearing on this page may now be found in the National Exchange Carrier Association, Inc., Tariff F.C.C. No. 4. (N)

E10. LATA CONFIGURATIONS (C)

Material formerly appearing on this page may now be found in the National Exchange Carrier Association, Inc., Tariff F.C.C. No. 4. (N)

E10. LATA CONFIGURATIONS (C)

Material formerly appearing on this page may now be found in the National Exchange Carrier Association, Inc., Tariff F.C.C. No. 4. (N)

E10. LATA CONFIGURATIONS (C)

Material formerly appearing on this page may now be found in the National Exchange Carrier Association, Inc., Tariff F.C.C. No. 4. (N)

E10. LATA CONFIGURATIONS (C)

Material formerly appearing on this page may now be found in the National Exchange Carrier Association, Inc., Tariff F.C.C. No. 4. (N)

E10. LATA CONFIGURATIONS (C)

Material formerly appearing on this page may now be found in the National Exchange Carrier Association, Inc., Tariff F.C.C. No. 4. (N)

E10. LATA CONFIGURATIONS (C)

Material formerly appearing on this page may now be found in the National Exchange Carrier Association, Inc., Tariff F.C.C. No. 4. (N)

E10. LATA CONFIGURATIONS (C)

Material formerly appearing on this page may now be found in the National Exchange Carrier Association, Inc., Tariff F.C.C. No. 4. (N)

E10. LATA CONFIGURATIONS (C)

Material formerly appearing on this page may now be found in the National Exchange Carrier Association, Inc., Tariff F.C.C. No. 4. (N)

E10. LATA CONFIGURATIONS (C)

Material formerly appearing on this page may now be found in the National Exchange Carrier Association, Inc., Tariff F.C.C. No. 4. (N)

E10. LATA CONFIGURATIONS (C)

Material formerly appearing on this page may now be found in the National Exchange Carrier Association, Inc., Tariff F.C.C. No. 4. (N)

E10. LATA CONFIGURATIONS (C)

Material formerly appearing on this page may now be found in the National Exchange Carrier Association, Inc., Tariff F.C.C. No. 4. (N)

E10. LATA CONFIGURATIONS (C)

Material formerly appearing on this page may now be found in the National Exchange Carrier Association, Inc., Tariff F.C.C. No. 4. (N)

E10. LATA CONFIGURATIONS (C)

Material formerly appearing on this page may now be found in the National Exchange Carrier Association, Inc., Tariff F.C.C. No. 4. (N)

E10. LATA CONFIGURATIONS (C)

Material formerly appearing on this page may now be found in the National Exchange Carrier Association, Inc., Tariff F.C.C. No. 4. (N)

E10. LATA CONFIGURATIONS (C)

Material formerly appearing on this page may now be found in the National Exchange Carrier Association, Inc., Tariff F.C.C. No. 4. (N)

E10. LATA CONFIGURATIONS (C)

Material formerly appearing on this page may now be found in the National Exchange Carrier Association, Inc., Tariff F.C.C. No. 4. (N)

E10. LATA CONFIGURATIONS (C)

Material formerly appearing on this page may now be found in the National Exchange Carrier Association, Inc., Tariff F.C.C. No. 4. (N)

E10. LATA CONFIGURATIONS (C)

Material formerly appearing on this page may now be found in the National Exchange Carrier Association, Inc., Tariff F.C.C. No. 4. (N)

E10. LATA CONFIGURATIONS (C)

Material formerly appearing on this page may now be found in the National Exchange Carrier Association, Inc., Tariff F.C.C. No. 4. (N)

E10. LATA CONFIGURATIONS (C)

Material formerly appearing on this page may now be found in the National Exchange Carrier Association, Inc., Tariff F.C.C. No. 4. (N)

E10. LATA CONFIGURATIONS (C)

Material formerly appearing on this page may now be found in the National Exchange Carrier Association, Inc., Tariff F.C.C. No. 4. (N)

E10. LATA CONFIGURATIONS (C)

Material formerly appearing on this page may now be found in the National Exchange Carrier Association, Inc., Tariff F.C.C. No. 4. (N)

E11. SPECIAL FACILITIES ROUTING OF ACCESS SERVICES

CONTENTS

E11.1 Description of Special Facilities Routing of Access Service 1
E11.1.1 General 1
E11.2 Rates and Charges for Special Facilities Routing of Access Services 1
E11.2.1 Diversity 1
E11.2.2 Avoidance 1
E11.2.3 Diversity and Avoidance Combined 1
E11.2.4 Cable-Only Facilities 1

E11. SPECIAL FACILITIES ROUTING OF ACCESS SERVICES (T)

E11.1 Description of Special Facilities Routing of Access Services

E11.1.1 General

A. The services provided under this Tariff are provided over such routes and facilities as the Company may elect. Special Facilities Routing is involved, when, in order to comply with requirements specified by the IC, the Company provides ***BellSouth SWA*** service or Special Access ***(a.k.a. BellSouth SPA)*** Service in a manner which includes one or more of the following conditions: (T)

1. Diversity

   Where two or more services must be provided over not more than two different physical routes.

2. Avoidance

   Where a service must be provided on a route which avoids specified geographical locations.

3. Cable-Only Facilities

   Certain Voice Grade ***(a.k.a. BellSouth SPA DSO VG)*** services are provided on Cable-Only Facilities to meet the particular needs of an IC. Service is provided subject to the availability of cable-only facilities. In the event of service failure, restoration will be made through the use of any available facilities as selected by the Company. (T)

B. Avoidance and Diversity are available on ***BellSouth SWA*** service as set forth in E6. preceding, and Narrowband, Voice Grade ***(a.k.a. BellSouth SPA DSO VG)*** and Wideband Analog Special Access ***(a.k.a. BellSouth SPA Wideband Analog)*** services as set forth in E7.2 preceding. Cable-Only Facilities are available for ***BellSouth SWA*** service as set forth in E6. preceding and Voice Grade Special Access ***(a.k.a. BellSouth SPA DSO VG)*** services as set forth in E7. preceding. (T)

C. In order to avoid the compromise of special routing information, the Company will provide the required routing information for each specially routed service to only the ordering IC. If requested by the IC, this information will be provided when service is installed and prior to any subsequent changes in routing.

D. The rates and charges for Special Facilities Routing of Access Services as set forth in E11.2 following are in addition to all other rates and charges that may be applicable for services provided under other sections of this Tariff.

E11.2 Rates and Charges for Special Facilities Routing of Access Services

The rates and charges for Special Facilities Routing of Access Services are as follows:

E11.2.1 Diversity

For each service provided in accordance with E11.1.1.A.1 preceding, the rates and charges will be developed on an individual case basis and filed following: (USOC SYD++)

E11.2.2 Avoidance

For each service provided in accordance with E11.1.1.A.2 preceding, the rates and charges will be developed on an individual case basis and filed following: (USOC SYA++)

E11.2.3 Diversity and Avoidance Combined

For each service provided in accordance with E11.1.1.A.1 and E11.1.1.A.2. preceding, combined, the rates and charges will be developed on an individual case basis and filed following: (USOC SYB++)

E11.2.4 Cable-Only Facilities

For each service provided in accordance with E11.1.1.A.3. preceding, the rates and charges will be developed on an individual case basis and filed following: (USOC SYC++)

E12. SPECIALIZED SERVICE OR ARRANGEMENTS

CONTENTS

E12.1 General 1
E12.1.1 Provision of Specialized Service or Arrangements 1
E12.2 Rates and Charges 1
E12.2.1 Specialized Service or Arrangements - Individual Cases 1
E12.3 Contract Service Arrangements 4 (T)
E12.3.1 General 4 (N)

E12. SPECIALIZED SERVICE OR ARRANGEMENTS

E12.1 General

E12.1.1 Provision of Specialized Service or Arrangements

A. Specialized service or arrangements may be provided by the Company, at the request of an IC, on an individual case basis if such service or arrangements meet the following criteria:

1. The requested service or arrangements are not offered under other sections of this Tariff.
2. The facilities utilized to provide the requested service or arrangements are of a type normally used by the Company in furnishing its other services.
3. The requested service or arrangements are provided within a LATA.
4. The requested service or arrangements are compatible with other Company services, facilities, and its engineering and maintenance practices.
5. This offering is subject to the availability of the necessary Company personnel and capital resources.

E12.2 Rates and Charges

Rates and Charges, and additional regulations if applicable, for specialized service or arrangements provided on an individual case basis are filed following:

E12.2.1 Specialized Service or Arrangement - Individual Cases

A. U. S. Sprint (Case No. 87-SB0729)

Provides programmatical conversion of all CIC codes from CIC #777 of GTE Sprint to CIC #333 of U.S. Sprint and interim rerouting of multiple CICs to one Feature Group D trunk per contract, dated April 9, 1987.

		Rate	USOC
1.	Programmatical Conversion		
	(a) Per run[1]	**$433.46**	**NA**
	(b) Per line	**.61**	**NA**
2.	Mechanized Line-By-Line Submission		
	(a) Per line	**1.12**	**NA**
3.	Interim Rerouting of Multiple CICs		
	(a) Per transmission path	**84.30**	**NA**

B. South Carolina State Government, Case No. 95-3781-01 (11-07-95), Columbia S.C. (N)

This Special Service Arrangement provides InterLata, Intrastate Spectrus* Multipoint Video Conferencing Service (MVCS). (N)

(N)

A sixty month payment plan with a minimum service period of sixty months is required. This customer is liable for the full sixty months of revenues to the Company and at the time of disconnect, has two payment options: (N)

Continue paying monthly for the remainder of the sixty month minimum service period. (N)

Make a lump sum payment discounted by prime interest rate plus two percentage points. (N)

General (N)

Spectrus* Multipoint Video Conferencing Service (MVCS) is an InterLata, Intrastate video service that provides switching and distribution processes required for interactive multipoint video conferencing based on International Telecommunications Union-Telecommunications (ITU-T) Px64 (H.320) standard Codec equipment which must be provided by the customer at the endpoint locations. (N)

This service includes a reservations center which provides established network connections, tracks individual conference room capabilities and availability, and provides initial trouble isolations. (M)

Note 1: The per run charge will normally apply at the tandem level; however, the number of runs required to complete the process may vary either as the result of the IC's merger plans or due to EC technical limitations.

Material previously appearing on this page now appears on page(s) 4 of this section

* Service Mark of BellSouth Corporation

E12. SPECIALIZED SERVICE OR ARRANGEMENTS

E12.2 Rates and Charges (Cont'd)

E12.2.1 Specialized Service or Arrangement - Individual Cases (Cont'd)

B. South Carolina State Government, Case No. 95-3781-01 (11-07-95), Columbia S.C. (Cont'd) (N)

General (Cont'd) (N)

For each MVCS site, the customer must subscribe to Special Access Service for the central office providing the MVCS to the designated interexchange carrier's (IC's) point of presence (POP). Special access rates and charges are provided in Section E7. preceding. (N)

Spectrus* Multipoint Video Conferencing Service is provided as follows; (1) Automatic, Voice Activated Mode, (2) Chairman Control Mode and (3) Broadcast/Presentation Mode. (N)

This service utilizes a Network based Multipoint Control Unit (MCU) to manage and switch compressed digital video signals produced by video Codec equipment at video bit rate capabilities of 1.536/1.544 Mbps, 768 Kbps, 336/384 Kbps, and 112/128 Kbps. (N)

MVCS includes a full-time, centralized, scheduling center (twenty-four hours per day, 365 days per year) accessible to the customer either by telephone dial-in, electronic mail, or facsimile. (N)

Scheduling can be established from two hours to eighteen (18) months in advance based on MCU/facility availability. (N)

The rates and charges set forth for Spectrus* MVCS provide for furnishing service where suitable facilities are available. (N)

The technical specifications and standard network interfaces for MVCS are contained in BellSouth Technical Reference 73566. This publication is available from: (N)

BellSouth Telecommunications, Inc. (N)
Documentation Organization
North W5A1
3535 Colonnade Parkway
Birmingham, Alabama 35243

Explanation of Terms (N)

Minute of Use (MOU) (N)

The term "minute of use" denotes the usage of MVCS facilities for the purpose of calculating chargeable usage. Partial minutes count as full minutes. (N)

No credit will be given for scheduled time not actually utilized unless cancelled forty-eight hours prior to the scheduled conference time. (N)

Network Compatibility Test (N)

Company/Customer end-to-end testing of end user equipment, Codecs, multiplexers, transmission facilities, and Digital Crossconnect Systems at MCU H.320 standard compatibility. (N)

MVCS-MOU (N)

A usage sensitive offering of MVCS for customers with fluctuating conference needs. This option is provided, per site, with a fixed and per minute of use rate. Normal calling scopes as defined in Sections A3. and A18. of this Tariff will apply to dial-in users. (N)

MVCS-50 (N)

A usage sensitive offering of MVCS for customers wishing to purchase a minimum of 50 hours conference time per site, per month. Additional time is permitted and will be billed per minute of use greater than 50 hours. Normal calling scopes as defined in Sections A3. and A18. of this Tariff will also apply to dial-in users. (N)

MVCS-100 (N)

A usage sensitive offering of MVCS for customers wishing to purchase a minimum of 100 hours conference time per site, per month. Additional time is permitted and will be billed per minute of use greater than 100 hours. Normal calling scopes as defined in Sections A3. and A18. of this Tariff will apply to dial-in users. (N)

* Service Mark of BellSouth Corporation

E12. SPECIALIZED SERVICE OR ARRANGEMENTS

E12.2 Rates and Charges (Cont'd)

E12.2.1 Specialized Service or Arrangement - Individual Cases (Cont'd)

B. South Carolina State Government, Case No. 95-3781-01 (11-07-95), Columbia S.C. (Cont'd) (N)

Basis of Offering (N)

Detailed billing may be provided under special arrangements. (N)

Suspension of service is not allowed. (N)

MVCS is not available for use with Broadcast Quality Video Service or Commercial Quality Video Service. (N)

MVCS is provided on a per site availability basis. (N)

A Network Compatibility Test is required and must be completed for each MVCS site prior to scheduling the first conference. Retesting may be necessary for changes such as CPE upgrades/moves, bit rate changes, or conference failure. (N)

The customer owned Codec equipment used to provide this service must be at ITU-T, Px64, H.320 standard and is a requirement of this service. (N)

MVCS must be provisioned with Extended Superframe Format (ESF) and Bipolar with 8 Zero substitution (Clear Channel Capability/B8ZS). (N)

Cascading of MCU's is not available with this service offering. (N)

Intermixing of various speeds within a single conference is not available with this service offering. (N)

The minimum conference time for all video bit rates is thirty minutes. (N)

Conference sites cancelled less than forty-eight hours prior to the scheduled conference time will be billed as scheduled. MVCS usage will not be applied for any conference site that fails due to any cause other than the negligence or willful act of the subscriber or the failure of customer provided equipment (N)

Access to MVCS for customers outside of BellSouth territory may be provided and billed for by other local exchange companies under the existing meet point guidelines. (N)

Obligations of Customer and Company (N)

The Company is not responsible for the installation, operation, or maintenance of any equipment provided by the customer. (N)

The customer is responsible for the provision and maintenance of all Customer Provided Equipment (CPE) and to ensure that the operating characteristics of this equipment is compatible with and does not interfere with the service offered by the Company. (N)

Provisions of Service (N)

Rates and charges contained in this Section of the Tariff consist of the following elements: (N)

MVCS - 50 (N)

MVCS - 100 (N)

Rates and Charges (N)

(1) Service Establishment Charge (N)

	Nonrecurring Charge	60 Months Monthly Rate	USOC	
(a) Per Arrangement	**$996.00**	**$-**	**NA**	(N)
(2) MVCS - 50 1.536/1.544 Mbps, per site				(N)
(a) Fixed (includes 50 hours of usage)	-	**631.00**	**1ZZ5A**	(N)
(b) Each additional MOU greater than 50 hours	-	**.22**	**NA**	(N)
(3) MVCS - 50 768 Kbps, per site				(N)
(a) Fixed (includes 50 hours of usage)	-	**476.00**	**1ZZ5B**	(N)
(b) Each additional MOU greater than 50 hours	-	**.22**	**NA**	(N)

E12. SPECIALIZED SERVICE OR ARRANGEMENTS

E12.2 Rates and Charges (Cont'd)

E12.2.1 Specialized Service or Arrangement - Individual Cases (Cont'd)

B. South Carolina State Government, Case No. 95-3781-01 (11-07-95), Columbia S.C. (Cont'd)

Rates and Charges (Cont'd)

(4) MVCS - 50
336/384 Kbps, per site

	Nonrecurring Charge	60 Months Monthly Rate	USOC
(a) Fixed (includes 50 hours of usage)	**$-**	**$304.00**	**1ZZ5C**
(b) Each additional MOU greater than 50 hours	**-**	**.22**	**NA**

(5) MVCS - 50
112/128 Kbps, per site

(a) Fixed (includes 50 hours of usage)	**-**	**206.00**	**1ZZ5D**
(b) Each additional MOU greater than 50 hours	**-**	**.22**	**NA**

(6) MVCS - 100
1.536/1.544 Mbps, per site

(a) Fixed (includes 100 hours of usage)	**-**	**860.00**	**1ZZ1A**
(b) Each additional MOU greater than 100 hours	**-**	**.22**	**NA**

(7) MVCS - 100
768 Kbps, per site

(a) Fixed (includes 100 hours of usage)	**-**	**681.00**	**1ZZ1B**
(b) Each additional MOU greater than 100 hours	**-**	**.22**	**NA**

(8) MVCS - 100
336/384 Kbps, per site

(a) Fixed (includes 100 hours of usage)	**-**	**479.00**	**1ZZ1C**
(b) Each additional MOU greater than 100 hours	**-**	**.22**	**NA**

(9) MVCS - 100
112/128 Kbps, per site

(a) Fixed (includes 100 hours of usage)	**-**	**365.00**	**1ZZ1D**
(b) Each additional MOU greater than 100 hours	**-**	**.22**	**NA**

(10) Network Compatibility Test

	Nonrecurring Charge	USOC
(a) Subsequent Per test	**$250.00**	**1ZZNC**

C. AT&T, Case No. 95-7064-01 (09-14-95), Atlanta, Ga. (N)

This Special Service Arrangement provides Central Office Channel Interface for Intrastate, InterLATA DS1 riding an Interstate Lightgate® Service System. The rates are month-to-month with a four month minimum service period required. The customer must convert to tariff service upon approval of this service in South Carolina. (N)

(1) Central Office Channel Interface (N)

	Nonrecurring Charge	Monthly Rate	USOC	
(a) Service Establishment Charge	**$763.00**	**$-**	**NA**	(N)
(b) Per DS1	**85.00**	**16.00**	**1ZZAT**	(N)

(M)

E12. SPECIALIZED SERVICE OR ARRANGEMENTS

E12.3 Contract Service Arrangements

E12.3.1 General (M)

A. When economically practicable, customer specific contract service arrangements may be furnished in lieu of existing tariff offerings provided there is reasonable potential for uneconomic bypass of the Company's services. Uneconomic bypass occurs when an alternative service arrangement is utilized, in lieu of Company services, at prices below the Company's rates but above the Company's incremental costs. Pursuant to Order No. 84-804, this Tariff will remain in effect unless otherwise modified or removed by authorization of the Public Service Commission. (M) (M)

B. Rates, Charges, Terms and additional regulations, if applicable, for the contract service arrangements will be developed on an individual case basis, and will include all relevant costs, plus an appropriate level of contribution. (M)

C. Unless otherwise specified, the regulations for contract service arrangements are in addition to the applicable regulations and rates specified in other sections of this Tariff. (M)

Material appearing on this page previously appeared on page(s) page 1 of this section.

E13. ADDITIONAL ENGINEERING, ADDITIONAL LABOR AND MISCELLANEOUS CHARGES

CONTENTS

E13.1	**Additional Engineering**	1	
E13.1.1	Reserved for Future Use	1	
E13.1.2	Reserved for Future Use	1	
E13.1.3	Charges for Additional Engineering	1	
E13.2	**Additional Labor**	1	
E13.2.1	Overtime Installation	1	
E13.2.2	Overtime Repair	1	
E13.2.3	Stand By	1	
E13.2.4	Testing and Maintenance with Other Telephone Companies	2	
E13.2.5	Other Labor	2	
E13.2.6	Charges for Additional Labor	2	
E13.3	**Miscellaneous Services**	3	
E13.3.1	Maintenance of Service	3	
E13.3.2	Restoration Priority (Obsoleted, See Section E113.)	3	
E13.3.3	BellSouth Equal Access Subscription	4	
E13.3.4	Standard Jacks - Registration Program	4.2	
E13.3.5	Testing Services	5	
E13.3.6	Provision of Access Service Billing Information	12	
E13.3.7	Protective Connecting Arrangements	13	
E13.3.8	Reserved for Future Use	13	
E13.3.9	Telecommunications Service Priority (TSP) System	13	
E13.3.10	BellSouth Administrative Management Service	16	
E13.3.11	**(DELETED)**	20	(D)
E13.3.12	BellSouth 8XX Toll Free Dialing Number Administration Service	22.1	
E13.3.13	BellSouth Billing Name and Address for ANI Service	26	
E13.3.14	Default CARE (Customer Account Record Exchange)	27.1	(N)
E13.3.15	**(DELETED)**	27.2	(D)
E13.3.16	**(DELETED)**	27.4	(D)
E13.3.17	**(DELETED)**	27.5	(D)
E13.3.18	Reserved for Future Use	27.6	(T)
E13.3.19	Reserved for Future Use	27.6	
E13.3.20	Reserved for Future Use	27.6	
E13.3.21	Reserved for Future Use	27.6	
E13.3.22	Reserved for Future Use	27.6	
E13.3.23	Physical Access Collocation Cross-Connect Service	28	
E13.3.24	Virtual Access Collocation Cross-Connect Service	31	
E13.3.25	DS3 Network Interface Unit With Loop Back Capability	33	

All AT&T and BellSouth marks contained herein and as set forth in the trademarks and service marks section of the BellSouth Tariff are owned by AT&T Intellectual Property or AT&T affiliated companies.

E13. ADDITIONAL ENGINEERING, ADDITIONAL LABOR AND MISCELLANEOUS CHARGES

E13.1 Additional Engineering

A. Additional Engineering will be provided by the Company at the request of the IC only when:

1. An IC requests additional technical information after the Company has already provided the technical information normally included on the Design Layout Report (DLR) as set forth in E6.1.5 and E7.1.7 preceding.
2. Additional engineering time is incurred by the Company to engineer an IC's request for a customized service.

B. The Company will notify the IC that additional engineering charges, as set forth in E13.1.3 following, will apply before any additional engineering is undertaken.

E13.1.1 [Reserved for Future Use] (T)

E13.1.2 [Reserved for Future Use] (T)

E13.1.3 Charges For Additional Engineering

A. The charges for additional engineering are as follows:

1. Additional engineering periods

		First Half Hour Or Fraction Thereof	Each Additional Half Hour Or Fraction Thereof	USOC	
(a)	Basic time, normally scheduled work hours,[1] per engineer	**$66.00**	**$39.79**	**AEH**	(T)
(b)	Overtime, outside of normally scheduled work hours,[1] per engineer	**73.41**	**47.20**	**AEH**	(T)

E13.2 Additional Labor

Additional labor is that labor requested by the IC on a given service and agreed to by the Company as set forth in E13.2.1 through E13.2.5 following. The Company will notify the IC that additional labor charges as set forth in E13.2.6 following will apply before any additional labor is undertaken.

E13.2.1 Overtime Installation

Overtime installation is that Company installation effort outside of normally scheduled working hours.[1] (T)

E13.2.2 Overtime Repair

Overtime repair is that Company maintenance effort performed outside of normally scheduled working hours.[1] (T)

E13.2.3 Stand By

Stand by includes all time in excess of one-half (1/2) hour during which Company personnel stand by to make installation acceptance tests or cooperative tests with an IC to verify facility repair on a given service.

Note 1: In this section normally scheduled working hours are an employee's scheduled work period in any given calendar day (e.g., 7:00 a.m. to 4:00 p.m.) for the application of rates based on working hours. (N)

E13. ADDITIONAL ENGINEERING, ADDITIONAL LABOR AND MISCELLANEOUS CHARGES

E13.2 Additional Labor (Cont'd)

E13.2.4 Testing and Maintenance with Other Telephone Companies

Additional testing, maintenance or repair of facilities which connect to facilities of other telephone companies is in addition to normal effort required to test, maintain or repair facilities provided solely by the Company. (T)

E13.2.5 Other Labor

Other Labor is that additional labor not included in E13.2.1 through E13.2.4 preceding and labor incurred to accommodate a specific IC request that involves only labor which is not covered by any other section of this Tariff. (C)

E13.2.6 Charges for Additional Labor

A. The charges for additional labor are as follows:

1. Installation or Repair (T)

	First Half Hour Or Fraction Thereof	Each Additional Half Hour Or Fraction Thereof	USOC	
(a) Overtime, outside of normally scheduled working hours on a scheduled work day,[1,2] per technician	**$29.31**	**$3.10**	**ALH**	(T)
(b) Premium time, outside of scheduled work day,[1] per technician	**32.42**	**6.21**	**ALH**	
2. Stand by, Testing and Maintenance with other telephone companies or Other Labor				
(a) Basic time, normally scheduled working hours,[2] per technician	-	**17.91**	**ALT**	(T) (T)
(b) Overtime, outside of normally scheduled working hours on a scheduled work day,[1,2] per technician	-	**21.01**	**ALT**	(T)
(c) Premium time, outside of scheduled work day,[1] per technician	-	**24.12**	**ALT**	
3. Testing and Maintenance with other telephone companies				
(a) Basic Time normally scheduled working hours,[2] per technician	**44.12**	**17.91**	**ALK**	(T) (T)
(b) Overtime, outside of normally scheduled working hours on a scheduled work day,[1,2] per technician	**47.22**	**21.01**	**ALK**	(T)

Note 1: A call out of a Company employee at a time not consecutive with the employee's scheduled work period is subject to a minimum charge of four hours.

Note 2: In this section normally scheduled working hours are an employee's scheduled work period in any given calendar day (e.g., 7:00 a.m. to 4:00 p.m.) for the application of rates based on working hours. (N)

E13. ADDITIONAL ENGINEERING, ADDITIONAL LABOR AND MISCELLANEOUS CHARGES

E13.2 Additional Labor (Cont'd)

E13.2.6 Charges for Additional Labor (Cont'd)

A. The charges for additional labor are as follows: (Cont'd)

3. (Cont'd)

	First Half Hour Or Fraction Thereof	Each Additional Half Hour Or Fraction Thereof	USOC	
(c) Premium Time, outside of scheduled work day,[1] per technician	**$50.33**	**$24.12**	**ALK**	(M)

Note 1: A call out of a Company employee at a time not consecutive with the employee's scheduled work period is subject to a minimum charge of four hours.

Material appearing on this page previously appeared on page(s) 2 of this section

E13. ADDITIONAL ENGINEERING, ADDITIONAL LABOR AND MISCELLANEOUS CHARGES

E13.3 Miscellaneous Services

E13.3.1 Maintenance of Service

A. When an IC reports a trouble to the Company for clearance and no trouble is found in the Company's facilities, the IC shall be responsible for payment of a Maintenance of Service charge for the period of time from when Company personnel are dispatched to the IC's or End User's premises to when the work is completed. Failure of Company personnel to find trouble in Company facilities will result in no charge if the trouble is actually in those facilities, but not discovered at the time.

B. The IC shall be responsible for payment of a Maintenance of Service charge when the Company dispatches personnel to the IC's or End User's premises, and the trouble is in equipment or communications systems provided by other than the Company or in detariffed CPE provided by the Company.

In either A. or B. preceding, no credit allowance will be applicable for the interruption involved if the Maintenance of Service Charge applies.

C. The Maintenance of Service Charges are as follows:

1. The charges for maintenance of service are as follows:

		First Half Hour Or Fraction Thereof	Each Additional Half Hour Or Fraction Thereof	USOC	
(a)	Basic time, normally scheduled working hours, per technician	**$80.00**	**$55.00**	**MVV**	(I)
(b)	Overtime, outside of normally scheduled working hours on a scheduled work day, per technician[1]	**90.00**	**65.00**	**MVV**	(I)
(c)	Premium time, outside of scheduled work day, per technician[1]	**100.00**	**75.00**	**MVV**	(I)

E13.3.2 Restoration Priority (Obsoleted See Section E113.)

Note 1: A call out of a Company employee at a time not consecutive with the employee's scheduled work period subject to a minimum charge of four hours.

E13. ADDITIONAL ENGINEERING, ADDITIONAL LABOR AND MISCELLANEOUS CHARGES

E13.3 Miscellaneous Services (Cont'd)

E13.3.3 BellSouth Equal Access Subscription (T)

A. Description (T)

1. Subscription

Subscription is a procedure whereby an end user for Telephone Exchange Service lines and/or trunks or the location provider or its authorized agent of pay telephones may select and designate to the Company an IC to access for IntraLATA toll calls without dialing an access code. The end user or location provider or its authorized agent may designate an IC for intraLATA toll, a different IC for interLATA toll, or the same IC for both. This IC is referred to as the end user's or pay telephone locations provider's or its authorized agent's preferred IC and is defined by a unique Carrier Identification Code (CIC) shown on the customer service record.

Should a customer wish to use other services of the same or another IC, it will be necessary for the customer to dial the necessary access code(s) to reach that IC's other service(s).

For Independent pay phone providers subscribing to SmartLine* service, the IC designated as the preferred IC for 0+ intraLATA toll traffic may direct the routing of 1+ intraLATA toll calls either to itself or another IC (transport carrier), without dialing of an access code, subject to provisions set forth following. The option chosen by the IC will apply to all pay telephones provided from all end offices subtending an access tandem which are subscribed to that IC.

The IC shall submit an order for all end offices subtending an access tandem indicating whether 1+ intraLATA toll traffic from its subscribed pay telephones shall be routed to itself (as direct IC) or to another IC (as transport carrier). Recordings with alternate dialing instructions are not acceptable. If calls are to be routed to a transport IC, the 0+ IC must provide written authorization certifying that the order is being submitted pursuant to an agreement with the transport carrier. Only one transport carrier may be indicated for each access tandem.

If the IC designated as the primary IC for 0+ intraLATA toll traffic does not submit an order designating the transport carrier for 1+ intraLATA toll traffic for pay telephones at all end offices subtending an access tandem, the 1+ intraLATA toll traffic for that office will continue to be routed to the Company until the subscribed 0+ carrier is ready to handle the 1+ IntraLATA toll sent-paid traffic, or makes arrangements with another IC to handle the traffic.

Note 1: IntraLATA 1+ Subscription is not available until BellSouth is authorized by appropriate State and Federal authorities to provide InterLATA service in South Carolina.

* Service Mark of BellSouth Corporation

E13. ADDITIONAL ENGINEERING, ADDITIONAL LABOR AND MISCELLANEOUS CHARGES

E13.3 Miscellaneous Services (Cont'd)

E13.3.3 BellSouth Equal Access Subscription (Cont'd) (T)

B. Verification of Choice of IC (C)

ICs ***must*** request verification of choice from their customers***/subscribers***. ***All l***etters of agency, recordings, or other evidence of verification shall be maintained by the IC for ***a minimum of two years after obtaining such verification***. (C)

1. **(DELETED)** (D)
2. Verification of Orders (C)

No IC ***(submitting carrier)*** shall submit to the Company a primary or preferred interexchange carrier (PIC) change order unless and until the order has first been confirmed in accordance with the following procedures: (C)

a. The IC has obtained the customer's written ***or electronically signed*** authorization***/verification*** to submit the order that explains what occurs when a PIC is changed and confirms: (C)

- the customer's billing name and address and each telephone number to be covered by the PIC change order;
- the decision to change the PIC to the IC; and
- the customer's understanding of the PIC change fee; or

b. The IC has obtained the customer's electronic authorization, placed from the telephone number(s) on which the PIC is to be changed, to submit the order that confirms the information described in a. preceding to confirm the authorization; or

c. An appropriately qualified independent third party operating in a location physically separate from the telemarketing representative has obtained the customer's oral authorization to submit the PIC change order that confirms and includes appropriate verification data (e.g., the customer's date of birth or social security number). (T)

An appropriately qualified independent third party may not be owned, operated, controlled, or directed by the soliciting IC, nor can it receive financial incentives to confirm IC changes. (N)

d. ***Such other*** verification ***procedures as may be specified in rules or regulations which are consistent with rules promulgated by the Federal Communications Commission pursuant to 47 United States Code Section 258, revised August 25, 2000 and effective November 28, 2000.*** (C)

C. Discrepancy ***in*** Subscription (C)

(DELETED) (D)

1. Definitions: (C)

a. Authorized carrier is defined as any carrier that submits a change, on behalf of an end user or location provider or its authorized agent, in the selection of a primary or preferred interexchange carrier (PIC) with authorization verified. (N)

b. Unauthorized carrier is defined as any carrier that submits a change, on behalf of an end user or location provider or its authorized agent, in the selection of a primary or preferred interexchange carrier (PIC) but fails to verify authorization. (N)

c. Unauthorized change is a change in an end user or location provider or authorized agent's selection of a primary or preferred interexchange carrier (PIC) that was made without verification. (N)

2. When the Company ***is informed by an*** end user or location provider or its authorized agent ***of an alleged unauthorized change, the Company shall notify both the authorized and alleged unauthorized carrier of the incident. The Company shall direct the end user or location provider or its authorized agent to the relevant governmental agency, when an alleged unauthorized change is reported, for determination of fault.*** (C)

In accordance with FCC Slamming Liability Rules, FCC Docket 94-129, the relevant governmental agency, in this instance the South Carolina Public Service Commission, will determine whether an unauthorized change occurred and resolution shall be handled directly with the authorized carrier, the unauthorized carrier and the end user, location provider or its authorized agent. (N)

3. When two or more IC orders are received for an end user or pay telephone line generated by telemarketing, the order with the latest application date determines customer choice.

ICs involved ***in changes will be*** notified by the weekly activity report via paper format or mechanized interface in Network Operations Forum (NOF) format. (C)

a. (DELETED) (D)

4. The alleged unauthorized carrier will be assessed the subscription change charges as specified in G. following, when an alleged unauthorized change has been reported by the end user or location provider or its authorized agent. (N)

E13. ADDITIONAL ENGINEERING, ADDITIONAL LABOR AND MISCELLANEOUS CHARGES

E13.3 Miscellaneous Services (Cont'd)

E13.3.3 BellSouth Equal Access Subscription (Cont'd)

D. BellSouth Equal Access Subscription Charge Application

1. New end users or location providers or its authorized agent or pay telephone, who will be served by end offices equipped with equal access, will be asked to select a preferred IC for intraLATA at the time they place an order with the Company for Telephone Exchange Service. A confirmation notice will be sent to the end user or location provider or its authorized agent of pay telephone identifying the IC selected. The nonrecurring charge for all other changes is as set forth in K. following.

   No Subscription charge will apply to new end users or new location providers or its authorized agent of pay telephone who return telemarketing confirmations of choice identifying an IC different from that given verbally to the Company, providing the confirmation of choice is returned within 30 days from the date the confirmation notice is mailed to the end user or location provider or its authorized agent.

   A subscription charge will apply for each intraLATA PIC change submitted, except as provided in 1. preceding. The applicable subscription charge for each interLATA PIC change submitted is as set forth in the BellSouth Telecommunications, Inc. Tariff FCC No. 1, Section 13.3.3. If intraLATA and interLATA PIC changes are submitted simultaneously for the same carrier, the intraLATA PIC rate will be as set forth in G.2. following.

2. If an IC elects to discontinue BellSouth SWA FGD or BellSouth SWA TSBSA 3 service in an equal access end office, within two years after the introduction of BellSouth SWA FGD or BellSouth SWA TSBSA 3 in the end office, the IC is obligated to contact, in writing, all end users or location providers or their authorized agents of pay telephones, who have selected, the canceling IC as their primary IC. The IC must inform the end user or pay telephone location provider or its authorized agent that they are canceling their BellSouth SWA FGD or BellSouth SWA TSBSA 3 service; request that the end user or location provider or its authorized agent select a new IC; and state that the canceling IC will pay the change charge as provided in K., following.

   For a period of two years from the date of BellSouth SWA FGD or BellSouth SWA TSBSA 3 discontinuance, the IC discontinuing service will be responsible for paying the change charge for any of its designated end users or pay telephone location providers or their authorized agents.

3. IC Pays Billing Option (N)

   The IC Pays Billing Option is an option that permits an IC to be charged by The Telephone Company for their end user's intraLATA PIC change charge when the Telephone Company changes an end user's primary IC assignment.
   The intraLATA PIC change may either be requested via an IC-provided end user or agent list submitted in the Customer Account Record Exchange (CARE) format (IC Pays – Carrier Initiated) or by the end user directly to the Telephone Company (IC Pays – Customer Initiated).
   ICs that subscribe to "IC Pays – Carrier Initiated" have the option to redirect billing of the intaLATA PIC change charge on a case by case basis.
   For ICs that subscribe to "IC Pays – Customer Initiated", all end user intraLATA PIC changes to the IC's CIC (and at the IC's option, changes from the IC's CIC to "No intraLATA PIC" initiated through the Telephone Company will be redirected to the IC.
   The IC submitting the intraLATA PIC change must sign an IC Pays Billing Option agreement with the Telephone Company for either of the IC Pays Billing Options to apply.
   When these conditions have been met, the end user will not be assessed the IntraLATA Subscription change charge for the intraLATA PIC change.
   The IC participating in the IC Pays Billing Option will pay the applicable charge for a change in IntraLATA Subscription as set forth in the following Section 13.3.3.G. (N)

F. (DELETED)

E13. ADDITIONAL ENGINEERING, ADDITIONAL LABOR AND MISCELLANEOUS CHARGES

E13.3 Miscellaneous Services (Cont'd)

E13.3.3 BellSouth Equal Access Subscription (Cont'd)

G. The nonrecurring charges for a change in IntraLATA Subscription are as follows:

1. Subscription change when not performed simultaneously with interLATA PIC change to the same carrier, per line or trunk

		Nonrecurring Charge	USOC	
(a)	billed to end user or pay telephone location provider or its authorized agent	**$3.07**	**EAJCP**	(I)
(b)	billed to IC	**3.07**	**EAJCP**	(I)
(c)	alleged unauthorized change	**3.07**	**EAJXB**	(I)

2. Subscription change when performed simultaneously with interLATA PIC change to the same carrier, per line or trunk

(a)	billed to end user or pay telephone location provider or its authorized agent	**1.51**	**EAJCP**	(I)
(b)	billed to IC	**1.51**	**EAJCP**	(I)
(c)	alleged unauthorized change	**1.51**	**EAJXB**	(I)

E13. ADDITIONAL ENGINEERING, ADDITIONAL LABOR AND MISCELLANEOUS CHARGES

E13.3 Miscellaneous Services (Cont'd)

(M)

E13.3.4 Standard Jacks - Registration Program

A. Provision of Standard Jacks

Standard jacks are provided by the Company to connect Registered Equipment to those services that are subject to the Registration Program as set forth in Technical Reference Publication AS No. 1. The use of jacks is covered in Part 68 of the FCC's Rules and Regulations. Specific jacks are described in the document on file with the FCC entitled "Descriptions of Standard Registration Program Connection Configurations Supplementing Configurations Described in Subpart F of Part 68 of the FCC's Rules and Regulations".

B. Use of Standard Jacks

These jacks are used to terminate services provided by the Company. Other Services or Facilities provided by the Company or by others may also be terminated in any spare capacity of the arrangements remaining after installation without additional charge for the use of such capacity.

C. Rates and Charges

The nonrecurring charges which include installation for standard jacks and their typical uses are set forth following:

1. Standard Voice Jacks

a. Miniature six position jacks for connection of terminal equipment as follows:

	Nonrecurring Charge	USOC
(1) Single line telephone set surface or flush mounted		
(a) Each	**$-**	**RJ11C**
(2) Single line telephone sets wall mounted		
(a) Each	**-**	**RJ11W**
(3) Two-line nonkey telephone sets surface or flush mounted		
(a) Each	**-**	**RJ14C**
(4) Single line 4-wire exchange, T/R, T1/R1		
(a) Each	**-**	**RJ1DC**

Material previously appearing on this page now appears on page(s) 4 of this section.

E13. ADDITIONAL ENGINEERING, ADDITIONAL LABOR AND MISCELLANEOUS CHARGES

E13.3 Miscellaneous Services (Cont'd)

E13.3.4 Standard Jacks - Registration Program (Cont'd)

C. Rates and Charges (Cont'd)

1. Standard Voice Jacks (Cont'd) (N)

a. Miniature six position jacks for connection of terminal equipment as follows: (Cont'd) (N)

(5) Two-line nonkey telephone sets wall mounted. (N)

	Nonrecurring Charge	USOC	
(a) Each	**$-**	**RJ14W**	(N)
(6) Special single line equipment for use in hospital critical care areas.			(N)
(a) Each	**6.16**	**RJ17C**	(N)
(7) 9DB single line data equipment with mode indication and mode indication common leads. This jack is normally used in association with a series jack.[1]			(N)
(a) Each	**-**	**RJ16X**	(N)
(8) Three-line nonkey telephone sets and ancillary devices.			(N)
(a) Each	**3.00**	**RJ25C**	(N)
(9) Single-line nonkey telephone and ancillary devices connected directly to central office lines where there is a requirement for make-busy.			(N)
(a) Portable wall mounted equipment, each	**6.42**	**RJ18W**	(N)
(b) All other, each	**6.23**	**RJ18C**	(N)
(10) For connection of two Access Services with provisions for testing each service with a standard single line telephone set.[2]			(N)
(a) Each	**-**	**RJ14X**	(N)
b. 50 Position Miniature Ribbon Jacks for connection of multiline terminating equipment and channel derivation devices as follows:			(N)
(1) For connection to 2-wire tie trunks E&M type I signaling. (12 line capacity)			(N)
(a) Each	**71.75**	**RJ2EX**	(N)
(2) For connection to 4-wire tie trunks E&M type I signaling. (8 line capacity)			(N)
(a) Each	**71.75**	**RJ2GX**	(N)
(3) For connection to 2-wire tie trunks E&M type II signaling. (8 line capacity)			(N)
(a) Each	**71.75**	**RJ2FX**	(N)
(4) For connection to 4-wire tie trunks E&M type II signaling. (6 line capacity)			(N)
(a) Each	**71.75**	**RJ2HX**	(N)
(5) For connection to off-premises station lines. (25 line capacity)			(N)
(a) Each	**71.75**	**RJ21X**	(N)

Note 1: Not suitable for use as a Network Interface. (N)

Note 2: The Company will wire the lines to the jack in the sequence designated by the IC or end user. (N)

E13. ADDITIONAL ENGINEERING, ADDITIONAL LABOR AND MISCELLANEOUS CHARGES

E13.3 Miscellaneous Services (Cont'd)

E13.3.4 Standard Jacks - Registration Program (Cont'd)

C. Rates and Charges (Cont'd)

1. Standard Voice Jacks (Cont'd) (N)

b. (Cont'd) (N)

(6) For use with series devices such as toll restrictors. (12 line capacity)[1] (N)

	Nonrecurring Charge	USOC	
(a) Each	**$19.13**	**RJ71C**	(N)
(7) For connection of up to 12 line 4-wire exchange, T/R, T1/R1.			(N)
(a) Each	**71.75**	**RJ2DX**	(N)
(8) For connection of two 12 line nonkey telephone and ancillary devices connected directly to central office lines where there is a requirement for make-busy.			(N)
(a) Each	**16.36**	**RJ2MB**	(N)
c. Series Jacks for connection of terminal equipment as follows:[1]			(N)
(1) Single line alarm reporting devices.			(N)
(a) Each	**23.25**	**RJ31X**	(N)
(2) Series ancillary devices such as automatic dialers. Single line sets with exclusion.			(N)
(a) Each	**23.25**	**RJ32X**	(N)
(3) Two-line telephone sets with exclusion on one line.			(N)
(a) Each	**23.25**	**RJ37X**	(N)
(4) Miniature Eight-Position Series Jack for connection of alarm reporting devices.			(N)
(a) Each	**9.84**	**RJ38X**	(N)
d. Weatherproof Jack used at locations such as boats and marinas.			(N)
(1) For use with single line telephone sets.			(N)
(a) Each	**25.50**	**RJ15C**	(N)
e. Miniature Eight-Position Jack.			(N)
(1) For connection of four line nonkey telephone sets, ancillary devices and key telephone systems.			(N)
(a) Each	**7.71**	**RJ61X**	(N)
2. Standard Data Jacks			(N)
(a) Universal Data Jack for use in connecting fixed loss loop (FLL) and programmed (P) types of data equipment. (1 line capacity)	**65.50**	**RJ41S**	(N)
(b) Programmed Data Jack for use in connecting programmed data equipment. (1 line capacity)	**55.25**	**RJ45S**	(N)

Note 1: Not suitable for use as a Network Interface. (N)

E13. ADDITIONAL ENGINEERING, ADDITIONAL LABOR AND MISCELLANEOUS CHARGES

E13.3 Miscellaneous Services (Cont'd)

E13.3.4 Standard Jacks - Registration Program (Cont'd)

C. Rates and Charges (Cont'd)

2. Standard Data Jacks (Cont'd)

		Nonrecurring Charge	USOC	
(c)	Multiple Line Universal Data Jack for use in connecting fixed loss loop (FLL) and programmed (P) types of data equipment. This jack will terminate up to eight lines. The selection of this jack requires the use of the equipment listed in (d) and (e) following.	**$176.25**	**RJ26X**	
(d)	Multiple Line Universal Data Jack Circuit Cards. For use with RJ26X. One circuit card per circuit required.	**45.00**	**RJ26S**	
(e)	Multiple Line Universal Data Jack Mounting options. For use with RJ26X. One required per RJ26X.	**-**	**NA**	
(f)	Wall Mounting with cover.	**20.50**	**RJM3X**	
(g)	Rack Mounting (19 inch or 23 inch)	**13.25**	**RJM4X**	
(h)	Miniature Eight-Position Keyed Jack for connection of local area data channels and/or Digital Access ***(a.k.a. BellSouth SPA DSO Digital Data)*** Services.	**7.71**	**RJ48S**	(T)
(i)	Miniature Eight-Position Keyed Jack for connection of Access Services to Programmed Data Terminal Equipment equipped with make busy levels.	**19.92**	**RJ4MB**	
(j)	Miniature Fifty-Position Ribbon Jack for connection of local area data channels and/or Digital Data Access ***(a.k.a. BellSouth SPA DSO Digital Data)*** services.[1]	**16.36**	**RJ48T**	(T)
(k)	Multiple Line Programmed Data Jack for use in connecting Programmed data equipment.	**185.33**	**RJ45M**	
(l)	Multiple Line Universal Data Jack for use in Programmed (P) types of data equipment. This jack will terminate up to eight lines.	**185.33**	**RJ41M**	
(m)	Miniature Fifty-Position Ribbon Jack for use in connecting Programmed (P) types of equipment.	**57.00**	**RJ27X**	

Note 1: The Company will wire the lines to the jack in the sequence designated by the customer.

E13. ADDITIONAL ENGINEERING, ADDITIONAL LABOR AND MISCELLANEOUS CHARGES

E13.3 Miscellaneous Services (Cont'd)

E13.3.4 Standard Jacks - Registration Program (Cont'd)

C. Rates and Charges (Cont'd)

3. Standard Digital Jacks (N)

		Nonrecurring Charge	USOC	
(a)	Miniature Eight-Position Jack for connection of 1.544 Mbps Digital Services.	**$7.60**	**RJ48C**	(N)
(b)	Miniature Fifty-Position Ribbon Jack for connection of 1.544 Mbps Digital Services.	**16.36**	**RJ48M**	(N)
(c)	Miniature Fifty-Position Ribbon Jack for connection of up to twelve four wire 1.544 Mbps digital lines.[1]	**19.13**	**RJ48H**	(N)
(d)	Miniature Eight-Position Jack with Shorting Bars for connection of 1.544 Mbps Digital Services.	**7.91**	**RJ48X**	(N)

4. Standard Non-Registration Jacks (N)

(a)	Single Private Line for connection of two/four wire T/R; T/R, T1/R1, TEK/TEK. Eight-Position Keyed Jack with/without loop back.	**7.71**	**JM8**	(N)

Note 1: The Company will wire the lines to the jack in the sequence designated by the IC or end user. (N)

E13. ADDITIONAL ENGINEERING, ADDITIONAL LABOR AND MISCELLANEOUS CHARGES

E13.3 Miscellaneous Services (Cont'd)

E13.3.5 Testing Services

A. Testing Services offered under this section of the Tariff are optional and subject to rates and charges as set forth in E13.3.5.F following. Other testing services provided by the Company in association with Access Services are furnished at no additional charge. These other testing services are described in E6.1.6 and E7.1.8 preceding.

B. Testing services are normally provided by Company personnel at Company locations. However, provisions are made in D.6. and E.2. following for an IC to request Company personnel to perform testing services at the IC terminal location or the end user's premises.

C. The offering of Testing Services under this section of the Tariff is made subject to the availability of the necessary qualified personnel and test equipment at the various test locations mentioned in D., E., and F. following:

D. ***BellSouth SWA*** Service (T)

1. Categories of Tests

   Testing Services for ***BellSouth SWA*** are comprised of (a) tests which are performed during the installation of a ***BellSouth SWA*** service, and (b) tests which are performed after acceptance of such access services by an IC, i.e., in-service tests. These in-service tests may be further divided into two broad categories of tests: scheduled and nonscheduled. (T)

   a. Scheduled Tests

      Scheduled tests are those tests performed by the Company on a regular basis, e.g., monthly, which result in the measurement of ***BellSouth SWA*** service. Scheduled tests may be done on an automatic basis (no Company or IC technicians involved), or a cooperative basis (Company technicians involved at Company offices and IC technicians involved at the IC's terminal location), or a manual basis (Company technician involved at Company offices and at the IC's terminal location). (T)

   b. Nonscheduled Tests

      Nonscheduled tests are tests performed by the Company "on demand", and which result in the measurement of ***BellSouth SWA*** services. Nonscheduled tests may involve Company technicians at Company offices and at the IC's terminal location. (T)

2. Additional Cooperative Acceptance Testing

   a. Additional Cooperative Acceptance Testing (ACAT) of ***BellSouth SWA*** service involves the Company provision of a technician at its office(s) and the IC provision of a technician at its terminal location(s), with suitable test equipment to perform the required tests. (T)

   b. Additional Cooperative Acceptance Tests, may e.g., consist of the following tests:

      C-Notched Noise

      Impulse Noise

      Phase Jitter

      Signal To C-Notched Noise Ratio

      Intermodulation (Nonlinear) Distortion

      Frequency Shift (Offset)

E13. ADDITIONAL ENGINEERING, ADDITIONAL LABOR AND MISCELLANEOUS CHARGES

E13.3 Miscellaneous Services (Cont'd)

E13.3.5 Testing Services (Cont'd)

D. ***BellSouth SWA*** Service (Cont'd) (T)

2. Additional Cooperative Acceptance Testing (Cont'd)

   b. (Cont'd)

   Envelope Delay Distortion

   Dial Pulse Percent Break

3. Automatic Scheduled Testing

   a. Automatic Scheduled Testing (AST) of ***BellSouth SWA*** services ***BellSouth SWA FGB***, ***BellSouth SWA FGC***, ***BellSouth SWA FGD***, and ***BellSouth SWA*** TSBSA***),*** where the IC provides remote office test lines and 105 test lines with associated responders or their functional equivalent, will consist of monthly loss and C-message noise tests and annual balance tests. (T)

   However, the IC may specify a more frequent schedule of tests. In addition to the loss/noise/balance tests, the IC may also order, at additional charges, gain-slope, and C-notched noise testing.

   b. The Company will provide a monthly AST report that lists the test results for each trunk tested.[1] Trunk test failures requiring customer participation for trouble resolution will be provided to the IC on an as-occurs basis.

4. Cooperative Scheduled Testing

   a. Cooperative Scheduled Testing (CST) of ***BellSouth SWA*** services (***BellSouth SWA FGB***, ***BellSouth SWA FGC***, ***BellSouth SWA FGD***, and ***BellSouth SWA*** TSBSA***,*** and ***BellSouth*** Directory ***Assistance*** Access Service not routed through an access tandem), where the Company provides a technician at its office(s) and the IC provides a technician at its terminal location(s) with suitable test equipment to perform the required tests, will consist of quarterly loss and C-message noise tests and annual balance tests. However, the IC may specify a more frequent schedule of tests. In addition to the loss/noise/ balance measurements, the IC may also order, at additional charges, gain-slope and C-notched noise testing. (T)

Note 1: Trunk test failures requiring IC participation for trouble resolution will be provided to the IC on an as-occurs basis.

E13. ADDITIONAL ENGINEERING, ADDITIONAL LABOR AND MISCELLANEOUS CHARGES

E13.3 Miscellaneous Services (Cont'd)

E13.3.5 Testing Services (Cont'd)

D. ***BellSouth SWA*** Service (Cont'd) (T)

4. Cooperative Scheduled Testing (Cont'd)

   b. The Company will provide, on a quarterly basis, a CST report that lists the test results for each trunk tested.[1] Trunk test failures requiring customer participation for trouble resolution will be provided to the IC on an as-occurs basis.

5. Manual Scheduled Testing (T)

   a. Manual Scheduled Testing (MST) of ***BellSouth SWA*** services (***BellSouth SWA FGB***, ***BellSouth SWA FGD***, ***BellSouth SWA*** TSBSA 1 and ***BellSouth SWA TSBSA*** 3 and ***BellSouth*** Directory ***Assistance*** Access Service not routed through an access tandem), where the Company provides a technician at its offices(s) and at the IC terminal location, will consist of quarterly loss and C-message noise tests and annual balance tests. However, the IC may specify a more frequent schedule of tests. In addition to the loss/noise/balance tests, the IC may also order, at additional charges, gain-slope and C-notched noise testing.

   b. The Company will provide, on a quarterly basis, a MST report that lists the test results for each trunk tested.[1] Trunk test failures requiring customer participation for trouble resolution will be provided to the IC on an as-occurs basis.

6. Nonscheduled Testing (T)

   a. Nonscheduled Testing (NST) of ***BellSouth SWA*** Services is where:

      (1) The IC provides remote office test lines and 105 test lines with associated responders or their functional equivalent ("automatic testing"), or

      (2) The Company provides a technician at its office(s) and the IC provides a technician at its terminal location(s), with suitable test equipment to perform the required tests ("cooperative testing"), or

      (3) The Company provides a technician at its office(s) and at the IC's terminal location(s) or End User's premises, with suitable test equipment to perform the required tests ("manual testing").

   b. Nonscheduled Tests, may consist of any tests, e.g., loss, noise, slope, envelope delay, which the IC may require.

Note 1: Trunk test failures requiring IC participation for trouble resolution will be provided to the IC on an as-occurs basis.

E13. ADDITIONAL ENGINEERING, ADDITIONAL LABOR AND MISCELLANEOUS CHARGES

E13.3 Miscellaneous Services (Cont'd)

E13.3.5 Testing Services (Cont'd)

D. ***BellSouth SWA*** Service (Cont'd) (T)

7. Obligations of the IC

   a. The IC shall provide the Remote Office Test Line priming data to the Company, as appropriate, to support AST as set forth in E13.3.5.D.3. preceding or NST as set forth in E13.3.5.D.6. preceding.

   b. The IC shall make the facilities to be tested available to the Company at times mutually agreed upon.

E. Special Access ***(a.k.a. BellSouth SPA)*** Service (T)

The Company will, at the request of an IC, provide assistance in performing specific tests requested by the IC.

1. Additional Cooperative Acceptance Testing (ACAT)

   When an IC provides a technician at its terminal location or at an end user's premises, with suitable test equipment to perform the required tests, the Company will provide a technician at its office for the purpose of conducting Additional Cooperative Acceptance Testing on voice grade services. At the IC's request, the Company will provide a technician at the IC terminal location or at the end user's premises. These tests may, e.g., consist of the following:

   Attenuation Distortion (i.e., frequency response),

   Intermodulation Distortion (i.e., harmonic distortion)

   Phase Jitter

   Impulse Noise

   Envelope Delay Distortion

   Echo Control

   Frequency Shift

2. Nonscheduled Testing (NST)

   When an IC provides a technician at its terminal location or at the end user's premises, with suitable test equipment to perform the required tests, the Company will provide a technician at its office for the purpose of conducting Nonscheduled Testing. At the IC's request, the Company will provide a technician at the IC terminal location or at the end user's premises. Nonscheduled Tests, may consist of any tests, e.g., loss, noise, slope, envelope delay, which the IC may require.

3. Obligation of the IC

   When the IC subscribes to Testing Service as set forth in this section, the IC shall make the facilities to be tested available to the Company at times mutually agreed upon.

E13. ADDITIONAL ENGINEERING, ADDITIONAL LABOR AND MISCELLANEOUS CHARGES

E13.3 Miscellaneous Services (Cont'd)

E13.3.5 Testing Services (Cont'd)

F. Rates and Charges

1. ***BellSouth SWA*** (T)

a. Additional Cooperative Acceptance Testing

(1) Testing Rates, per technician

		First Half Hour Or Fraction Thereof	Each Additional Half Hour Or Fraction Thereof	USOC
(a)	Basic Time (normally scheduled work hours.)	**$43.75**	**$17.54**	**UBCX+**
(b)	Overtime (Outside normally scheduled work hours on a scheduled work day.)	**47.02**	**20.81**	**UBCX+**

E13. ADDITIONAL ENGINEERING, ADDITIONAL LABOR AND MISCELLANEOUS CHARGES

E13.3 Miscellaneous Services (Cont'd)

E13.3.5 Testing Services (Cont'd)

F. Rates and Charges (Cont'd)

1. ***BellSouth SWA*** (Cont'd) (T)

a. Additional Cooperative Acceptance Testing (Cont'd)

(1) Testing Rates, per technician (Cont'd)

	First Half Hour Or Fraction Thereof	Each Additional Half Hour Or Fraction Thereof	USOC
(c) Premium Time (Outside scheduled work day.)[1]	**$50.29**	**$24.08**	**UBCX+**

b. Automatic Scheduled Testing (AST)

(1) To first point of switching, per test ordered, per year

	Monthly Rate	USOC
(a) 1004 Hz Loss[2,3,4] per transmission path	**$.06**	**UBGX+**
(b) C-Message Noise[2,3,4] per transmission path	**.06**	**UBGX+**
(c) Return Loss (Balance)[2,3,4] per transmission path	**.06**	**UBGX+**
(d) Gain-Slope[4] per transmission path	**.06**	**UBGX+**
(e) C-Notched Noise, per transmission path	**.06**	**UBGX+**

c. Cooperative Scheduled Testing (CST)

(1) To first point of switching, per test ordered, per year

(a) 1004 Hz Loss,[2,3,4] per transmission path	**.34**	**UBSX+**
(b) C-Message Noise,[2,3,4] per transmission path	**.25**	**UBSX+**
(c) Return Loss (Balance),[2,3,4] per transmission path	**.55**	**UBSX+**

Note 1: A call-out of a Company employee at a time not consecutive with the employee's scheduled work period is subject to a minimum charge of four hours.

Note 2: The IC may specify a more frequent schedule of tests, 60 days prior to the start of the IC prescribed schedule.

Note 3: These three tests represent the minimum offering, (i.e., an order for testing must at a minimum, consist of four 1004 Hz Loss Tests per transmission path, four C-Message Noise Tests per transmission path and one Return Loss (Balance) Test per transmission path, per year). The additional tests listed may be ordered by the IC at additional charges, 60 days prior to the start of the IC prescribed schedule.

Note 4: Subject to a one year minimum contract period and annually thereafter.

E13. ADDITIONAL ENGINEERING, ADDITIONAL LABOR AND MISCELLANEOUS CHARGES

E13.3 Miscellaneous Services (Cont'd)

E13.3.5 Testing Services (Cont'd)

F. Rates and Charges (Cont'd)

1. ***BellSouth SWA*** (Cont'd) (T)

c. Cooperative Scheduled Testing (CST) (Cont'd)

(1) To first point of switching, per test ordered, per year (Cont'd)

	Monthly Rate	USOC
(d) Gain-Slope, per transmission path	**$.34**	**UBSX+**
(e) C-Notched Noise, per transmission path	**.25**	**UBSX+**

d. Manual Scheduled Testing (MST)

(1) To first point of switching, per test ordered, per year

(a) 1004 Hz Loss[1,2,3] per transmission path	**.90**	**UBMX+**
(b) C-Message Noise,[1,2,3] per transmission path	**.59**	**UBMX+**
(c) Return Loss (Balance),[1,2,3] per transmission path	**1.20**	**UBMX+**
(d) Gain-Slope, per transmission path	**.90**	**UBMX+**
(e) C-Notched Noise, per transmission path	**.59**	**UBMX+**

e. Nonscheduled Testing (NST)

(1) Cooperative Testing:

	First Half Hour Or Fraction Thereof	Each Additional Half Hour Or Fraction Thereof	USOC
(a) Basic, normally scheduled work hours, per technician	**$43.75**	**$17.54**	**USSX+**
(b) Overtime, outside normally scheduled work hours on a scheduled work day, per technician	**47.02**	**20.81**	**USSX+**

Note 1: The IC may specify a more frequent schedule of tests, 60 days prior to the start of the IC prescribed schedule.

Note 2: These three tests represent the minimum offering, (i.e., an order for testing must at a minimum, consist of four 1004 Hz Loss Tests per transmission path, four C-Message Noise Tests per transmission path and one Return Loss (Balance) Test per transmission path, per year). The additional tests shown may be ordered by the IC at additional charges, 60 days prior to the start of the IC prescribed schedule.

Note 3: Subject to a one year minimum contract period and annually thereafter.

E13. ADDITIONAL ENGINEERING, ADDITIONAL LABOR AND MISCELLANEOUS CHARGES

E13.3 Miscellaneous Services (Cont'd)

E13.3.5 Testing Services (Cont'd)

F. Rates and Charges (Cont'd)

1. ***BellSouth SWA*** (Cont'd) (T)

e. Nonscheduled Testing (NST) (Cont'd)

(1) Cooperative Testing: (Cont'd)

	First Half Hour Or Fraction Thereof	Each Additional Half Hour Or Fraction Thereof	USOC
(c) Premium, outside scheduled work day, per technician[1]	**$50.29**	**$24.08**	**USSX+**

(2) Manual Testing

(a) Basic, normally scheduled work hours, per technician	**43.93**	**17.72**	**USMX+**
(b) Overtime, outside normally scheduled work hours on a scheduled work day, per technician	**47.12**	**20.91**	**USMX+**
(c) Premium, outside scheduled work day, per technician[1]	**50.31**	**24.10**	**USMX+**

(3) Automatic Testing, to first point of switching, per test performed:

	Rate	USOC
(a) 1004 Hz Loss	**$12.44**	**USCX+**
(b) C-Message Noise	**12.44**	**USCX+**
(c) Return Loss (Balance)	**12.44**	**USCX+**
(d) Gain-Slope	**12.44**	**USCX+**
(e) C-Notched Noise	**12.44**	**USCX+**

2. Special Access ***(a.k.a. BellSouth SPA)*** (T)

a. Additional Cooperative Acceptance Testing (ACAT)

(1) Applies to the following tests:

VG1 through 5: Attenuation Distortion, C-Message Noise and Echo Control

VG6 through 12: Attenuation Distortion, C-Message Noise, Balance (Return Loss), Impulse Noise, Phase Jitter, Intermodulation Distortion, Envelope Delay Distortion and Frequency Shift

Note 1: A call-out of a Company employee at a time not consecutive with the employee's scheduled work period is subject to a minimum charge of four hours.

E13. ADDITIONAL ENGINEERING, ADDITIONAL LABOR AND MISCELLANEOUS CHARGES

E13.3 Miscellaneous Services (Cont'd)

E13.3.5 Testing Services (Cont'd)

F. Rates and Charges (Cont'd)

2. Special Access ***(a.k.a. BellSouth SPA)*** (Cont'd) (T)

a. Additional Cooperative Acceptance Testing (ACAT) (Cont'd)

(1) Applies to the following tests: (Cont'd)

		First Half Hour Or Fraction Thereof	Each Additional Half Hour Or Fraction Thereof	USOC
(a)	Basic time, normally scheduled work hours, per technician	**$44.12**	**$17.91**	**SNTX+**
(b)	Overtime, outside of normally scheduled work hours on a scheduled work day, per technician	**47.22**	**21.01**	**SNTX+**
(c)	Premium time, outside of scheduled work day, per technician[1]	**50.33**	**24.12**	**SNTX+**

b. Nonscheduled Testing (NST)

(1) Testing Rates, per technician

(a)	Basic time (normally scheduled work hours)	**44.12**	**17.91**	**SNOX+**
(b)	Overtime (outside normally scheduled work hours on a scheduled work day)	**47.22**	**21.01**	**SNOX+**
(c)	Premium time (outside scheduled work day)[1]	**50.33**	**24.12**	**SNOX+**

E13.3.6 Provision of Access Service Billing Information

A. The IC will receive its monthly bills in a standard paper format.

B. At the option of the IC, and for an additional charge:

1. IC monthly bills may be provided on magnetic tape.
2. Billing detail and/or information may be transmitted to the IC terminal location by data transmission.
3. Additional copies of the IC monthly bill or service and features record may be provided in standard paper or microfiche format.

C. Upon acceptance by the Company of an order for data transmission, the Company will determine the period of time to implement the transmission of such material on an individual order basis.

Note 1: A call out of a Company employee at a time not consecutive with the employee's scheduled work period is subject to a minimum charge of four hours.

E13. ADDITIONAL ENGINEERING, ADDITIONAL LABOR AND MISCELLANEOUS CHARGES

E13.3 Miscellaneous Services (Cont'd)

E13.3.6 Provision of Access Service Billing Information (Cont'd)

D. The following rates are applicable for the provision of Access Service Billing Information:

1. Provision of Standard Billing Detail and/or Information in magnetic tape format

	Rate	USOC
(a) Per magnetic tape[1]	**$-**	**NA**

2. Data transmission to an IC terminal location of Billing Detail and/or Information

(a) Per record transmitted[1]	-	**NA**

3. Additional copies of IC monthly bill or service and features record in standard paper or microfiche format

(a) Per page[1]	-	**NA**
(b) Per microfiche record[1]	-	**NA**

E13.3.7 Protective Connecting Arrangements

A. See the Company's General Subscriber Service Tariff, Section A15. for Rates and Regulations.

E13.3.8 Reserved for Future Use (N)

E13.3.9 Telecommunications Service Priority (TSP) System (N)

A. Service Description (N)

1. The Telecommunications Service Priority (TSP) System is a structured coding scheme that prescribes the order in which National Security Emergency Preparedness (NSEP) telecommunications services are installed or restored. TSP System service is limited to qualifying state and local governments, the federal government, foreign governments and certain private industry telecommunications services. The TSP System was developed to support the requirements of the U. S. Government and applies only to NSEP telecommunications services to which the Company is able to apply priority treatment. It requires and authorizes priority action by the Company. (N)

2. Conditions of emergency or crises that cause invocation of NSEP treatment can only be declared by authorized officials of the Federal Government or other officials (Federal or non-Federal) specified by the Manager - National Communications System (NCS) on behalf of the Executive Office of the President of the United States. (N)

B. Service Limitations (N)

1. Priority installation and/or restoration of NSEP telecommunications services shall be provided in accordance with Part 64.401, Appendix A, of the Federal Communications Commission's Rules and Regulations. (N)

   In addition, TSP System service shall be provided in accordance with the guidelines set forth in "Telecommunications Service Priority (TSP) System for National Security Emergency Preparedness (NSEP) Service User Manual" (NCS manual 3-1-1 dated July 9, 1990) and "Telecommunications Service Priority (TSP) System for National Security Emergency Preparedness (NSEP) Service Vendor Handbook" (NCS manual 3-1-2 dated July 9, 1990). (N)

Note 1: Rates and charges based on individual cases will apply.

E13. ADDITIONAL ENGINEERING, ADDITIONAL LABOR AND MISCELLANEOUS CHARGES

E13.3 Miscellaneous Services (Cont'd)

E13.3.9 Telecommunications Service Priority (TSP) System (Cont'd) (N)

B. Service Limitations (Cont'd) (N)

2. The customer for the TSP System service must also be the same customer for the underlying Access Service with which it is associated. (N)
3. The Company will arrange for the installation and/or restoration of TSP System service upon receipt of the proper certification as specified in B.1. preceding. (N)
4. It is the responsibility of the TSP user to provide the TSP Authority Code to the Company with each service request. (N)
5. When performing Priority Installation or Priority Restoration (repair) on TSP-designated services in compliance with the Rules and Regulations cited in B.1. preceding, the Company may not be in a position to notify the customer regarding additional labor charges if additional labor is required. The customer recognizes that quoting charges and obtaining permission to proceed with the installation or restoration of service may cause unnecessary delays and grants the Company the right to quote charges after the installation or restoration has been completed. (N)

C. Rules and Regulations (N)

1. Under certain conditions, it may be necessary to preempt one or more customer services with a lower (or no) restoration priority in order to install or restore NSEP telecommunications service(s). If preemption is necessary and if circumstances permit, the Company will make every reasonable effort to notify the preempted customer of the action to be taken. Credit allowance for service preemption will adhere to the provisions appearing in E2.5 of this Tariff. (N) (N)
2. No charge applies when a TSP designation is discontinued. (N)
3. With the exception of credit information, a customer obtaining TSP System service acknowledges and consents to the provision of certain customer service details by the Company to the Federal Government to allow for the proper maintenance and administration of the TSP System. That information includes but is not necessarily limited to: (N)
   - Confirmation of completed TSP service orders directly to the Manager, National Communications System (NCS); (N)
   - Verification of installation and/or restoration priority level assignment(s) with the Manager, NCS; (N)
   - Reconciliation of TSP service information with the Manager, NCS, or the customer (prime service vendor). (N)

D. Definitions (N)

National Communications System (NCS) (N)

The NCS is established under the Executive Office of the President of the United States and is responsible for the day-to-day operations of the TSP System. This includes maintaining a twenty-four hour point-of-contact to handle emergency provisioning requests, assigning priority levels and Authorization Codes and maintaining data on TSP assignments. (N) (N)

National Security Emergency Preparedness (NSEP) Services

NSEP services are telecommunications services that are used to maintain a state of readiness or to respond to and manage any events or crises (local, national or international) which causes or could cause injury or harm to the population, damage to or loss of property, or degrade or threaten the NSEP posture of the United States. (N) (N)

Prime Vendor

The service vendor from whom the service user or its authorized agent orders service.

E13. ADDITIONAL ENGINEERING, ADDITIONAL LABOR AND MISCELLANEOUS CHARGES

E13.3 Miscellaneous Services (Cont'd)

E13.3.9 Telecommunications Service Priority (TSP) System (Cont'd) (N)

D. Definitions (Cont'd) (N)

Priority Installation (PI) (N)

Provisioning, on a priority basis, of a new TSP service authorized as so urgent that it must be provided earlier than the Company's standard provisioning interval. (N)

Priority Restoration (PR) (N)

Restoration, on a priority basis, of an existing TSP service for which any interruption would have serious adverse impact on the supported NSEP function. (N)

Subcontractor (N)

The service vendor from whom the prime vendor obtains service for the completion of the prime vendor's end-to-end service. (N)

(N)

Telecommunications Service Priority (TSP) System (N)

TSP is a structured coding scheme that establishes the order in which NSEP services are to be installed or restored in the event of an emergency. The TSP System was developed to ensure priority treatment of the nation's most important telecommunications services. (N)

TSP Authorization Code (N)

A twelve character code that identifies an NSEP TSP service and denotes the order in which that service is to be provisioned (installed) and/or restored. (N)

E. TSP Rate Categories (N)

1. There are two basic rate categories which apply to TSP System service: (N)
   a. Priority Installation (N)
   b. Priority Restoration (N)
      - Level Implementation (N)
      - Level Change (N)
      - Maintenance/Administration (N)
2. Certain activities associated with the TSP System are included in the rate elements as follows: (N)
   a. Priority Installation includes order coordination. (N)
   b. Priority Restoration includes system development, verification and confirmation. (N)

F. Rates and Charges (N)

1. The following rates and charges are in addition to all other rates and charges that may be applicable for other services furnished in conjunction with TSP service: (N)
   a. Priority Installation (PI)[1] (N)
      (1) Per circuit

		Nonrecurring Charge	Monthly Rate	USOC	
(a)	Prime vendor	**$83.00**	**$-**	**P1APX**	(N)
(b)	Subcontractor	**83.00**	**-**	**P1ASX**	(N)

Note 1: TSP Authority Codes are not applicable to the Hub-to-Hub portion of a multipoint arrangement.

E13. ADDITIONAL ENGINEERING, ADDITIONAL LABOR AND MISCELLANEOUS CHARGES

E13.3 Miscellaneous Services (Cont'd)

E13.3.9 Telecommunications Service Priority (TSP) System (Cont'd)

F. Rates and Charges (Cont'd)

1. (Cont'd)

b. Priority Restoration (PR)[1], per circuit

(1) Level Implementation

	Nonrecurring Charge	Monthly Rate	USOC
(a) Prime vendor	**$65.00**	**$-**	**PR5PX**
(b) Subcontractor	**65.00**	**-**	**PR5SX**
(2) Level Change			
(a) Prime vendor	**65.00**	**-**	**PR8PX**
(b) Subcontractor	**65.00**	**-**	**PR8SX**
(3) Administration/Maintenance			
(a) Prime vendor	**-**	**3.75**	**PR9PX**
(b) Subcontractor	**-**	**3.75**	**PR9SX**

E13.3.10 BellSouth Administrative Management Service

A. Service Description

1. General

BellSouth Administrative Management Service provides customers a single point of access to other Company network management products, and provides the customer greater control of and additional information about the network services they purchase from the Company. The features offered under Basic Service A are provided through the same system, Electronic Communications Gateway, that the Company utilizes for access to these features. The features offered under Basic Service B are being offered through the system utilized for the initial BellSouth Administrative Management Service offering.

Although most Operation Support Systems (OSS) are optional on a nominal business day, BellSouth Administrative Management Service will be provided on a twenty-four hour basis for continuous usage of those systems that are accessible twenty-four hours.

2. Customer Access

The customer for the existing BellSouth Administrative Management service, will have access to the system through a customer provided VT100 terminal with a choice of up to 2400 bits per second (BPS) dial access or a dedicated 9600 bps private line. For the features offered through Basic Service A, the customer may choose to ***access the Preferred Interexchange Carrier (PIC) Service by utilizing a workstation or Personal Computer, and either connecting via a dial access (up to 19.2 bps) or a private line connection. The Trouble Administration (TA) service may be accessed with a Personal Computer via the Public Internet or a private line connection.*** If the customer of Basic Service A chooses a dial access, the purchase of a Security Card will be required for each dial access arrangement. (C)

If the subscriber has purchased a Security Card in conjunction with another feature or service offered by the Company, that Security Card may also be used in conjunction with Basic Service A. It is up to the subscriber to notify the Company of an existing Security Card so the Company can ensure that the card is validated for multiple features and/or services.

3. Maintenance and Operation

Due to the nature of the hardware used to offer these services, it may be necessary to perform preventive and routine maintenance on the system. At such times, the customers will be notified in advance as to the time and duration of these outages.

E13. ADDITIONAL ENGINEERING, ADDITIONAL LABOR AND MISCELLANEOUS CHARGES

E13.3 Miscellaneous Services (Cont'd)

E13.3.10 BellSouth Administrative Management Service (Cont'd)

B. Regulations

1. Basis of Offering

Administrative Management Service will be available where facilities are available.

Basic Service A will provide the customer the following capabilities.

- PIC Inquiry and Order (For BellSouth SWA FGD Customers)
- Trouble Administration on Access Service

Basic Service B will provide the customer the following capabilities.

- Product and Service Information
- Service Order Status on Access Services
- Billing Information on Access Services

The Company shall not be responsible if changes in any of the equipment, operations, or procedures of the Company utilized in the provision of these services render any facilities provided by a customer obsolete or require modification or alteration of such equipment or system or otherwise affect its use or performance.

The Company will assist the customer in resolving any installation or day to day channel service problems. However, the Company does not assume responsibility for the compatibility or suitability of the customer's equipment.

2. Provision of Service

Customer access to the existing BellSouth Administrative Management Service may be either a BellSouth SWA (Dial) Service, a Private Line Service, or ***Public Internet Service***. (T)

For dial/shared access, the customer will be required to provide a terminal, a modem, and dial tone at his premises. Provided the customer's premises resides in a Company LATA, the customer will dial a non-toll access number which furnishes access to BellSouth Administrative Management Service. If the customer's premises does not reside in a Company LATA, the customer must obtain an access line to a Company location from which the Company offers access to BellSouth Administrative Management Service. The BellSouth Administrative Management Service port will be assigned a seven digit number to enable the customer to access this port. If the customer desires multiple telephone numbers to access BellSouth Administrative Management Service, an additional port charge will be required for each additional telephone number requested.

Dedicated access will be provided at speeds up to 9600 bps for customers wanting continuous access to the existing BellSouth Administrative Management Service. The customer will be required to provide at his premises a terminal, a modem, obtain a dedicated data circuit to a location designated by the Company at which the Company provides access to BellSouth Administrative Management Service.

For the Basic Service A offering the customer will be required to provide a terminal, a modem, and a dial tone at his premises and obtain a Security Card for each dial access desired.

Dedicated access will be provided for customers of Basic Service A desiring continuous access to this offering. Additionally, the customer of Basic Service A will be required to provide at his premises a terminal, a modem, and obtain a dedicated data circuit to a location designated by the Company at which the Company provides access to Basic Service A.

E13. ADDITIONAL ENGINEERING, ADDITIONAL LABOR AND MISCELLANEOUS CHARGES

E13.3 Miscellaneous Services (Cont'd)

E13.3.10 BellSouth Administrative Management Service (Cont'd)

C. Explanation of Terms

BILLING INFORMATION ON ACCESS SERVICE

The customer will have access to his records, whereby, he may gain information about his last and current bill amount and any payments or adjustments posted to date. He will also have access to his Customer Service record which provides detailed information about his services provided by the Company.

PIC INQUIRY AND ORDER

This feature provides BellSouth SWA customers (BellSouth SWA FGD) the ability to perform the following Prescribed Interexchange Carrier (PIC) functions.

- PIC Inquiry (T)
- PIC Order (T)
- **(DELETED)** (D)
- **(DELETED)** (D)

PRODUCT AND SERVICE INFORMATION

This feature provides the following Central Office information: CLLI codes, switch type, V&H coordinates, network access lines, host information (if applicable), switch location, and equal access information.

SERVICE ORDER STATUS ON ACCESS SERVICE

The customer will have access to a mechanized interface for use when viewing order status information for Access Service.

TROUBLE ADMINISTRATION ON ACCESS SERVICE

This feature offers mechanized access for the customer to electronically perform the following functions:

- Enter Trouble Report
- Request Trouble Report Status
- Add Trouble Report Information
- Modify Trouble Report Attributes
- Verify Repair Completion
- Cancel Trouble Report
- Trouble Report Attribute Value Change

D. Application of Rates

1. Basic Service A

Basic Service A includes service establishment, multilevel security, network administration aids which includes a User's Handbook for customer training, Port Access and Features Listed.

E13. ADDITIONAL ENGINEERING, ADDITIONAL LABOR AND MISCELLANEOUS CHARGES

E13.3 Miscellaneous Services (Cont'd)

E13.3.10 BellSouth Administrative Management Service (Cont'd)

D. Application of Rates (Cont'd)

1. Basic Service A (Cont'd)

   - PIC Inquiry and Order (for BellSouth SWA FGD Customers)
   - Trouble Administration on Access Service

   This rate element is offered at no charge.

2. Security Card

   Dial customers of Basic Service A must order a Security Card. A nonrecurring charge will apply. This card provides the customer a unique password identification code, which will electronically change periodically, thereby providing a valuable layer of security. Should the customer require additional cards for reasons such as additional users or lost or damaged card, a nonrecurring charge will apply for each additional card requested.

3. Basic Service B

   Basic Service B includes ***service establishment***, multilevel security, and network administration aids, which includes a User's Handbook for customer training. (C)

   A nonrecurring charge and a recurring rate will apply.

4. Features

   Access to the required background OSS will be provided via the normal control network at each System.

   - For each feature described in E.3., following a nonrecurring charge and a recurring rate applies.
   - The PIC feature is only for access to the system. All other appropriate PIC change charges as found in E13.3.3 preceding apply.

5. User ID Charge

   The User ID charge is a nonrecurring charge per customer for Basic Service B.

6. Port Access

   Port Access, which is required for each access capability for Basic Service B desired by the customer, includes a nonrecurring charge and a recurring rate.

   Rates and charges for dial/shared port access is as set forth in E.5.(a) following.

   Rates and charges for dedicated port access is as set forth in E.5.(b) following.

E. Rates and Charges

Basic Service A includes ***service establishment***, multilevel security, network administration aids which includes a User's Handbook for customer training, Port Access and Features Listed. (C)

E13. ADDITIONAL ENGINEERING, ADDITIONAL LABOR AND MISCELLANEOUS CHARGES

E13.3 Miscellaneous Services (Cont'd)

E13.3.10 BellSouth Administrative Management Service (Cont'd) (T)

E. Rates and Charges (Cont'd)

- PIC Inquiry and Order - For ***BellSouth SWA FGD*** Customers Only (T)
- Trouble Administration on Access Service

(1) Basic Service A

	Nonrecurring Charge	USOC
(a) Security Card, Initial and Subsequent	**$100.00**	

Basic Service B includes the initialization of the customer's database and menu setup, multilevel security, network administration aids which includes a User's Handbook for customer training and Administration Reports.

(2) Basic Service B

	Nonrecurring Charge	Monthly Rate	USOC
(a) Initial Setup	**$715.75**	**$55.00**	**AMSTB**
(3) Features, per subscribed system			
(a) Product and Service Information	**584.00**	**43.25**	**MB5PM**
(b) Service Order Status on Access Service	**306.45**	**29.35**	**MB5SM**
(c) Billing Information on Access Service	**305.45**	**34.75**	**MB5LM**
(4) User ID's, per Customer			
(a) First 15	**18.00**	**-**	**U1G1A**
(b) Each Additional set of 5	**18.00**	**-**	**U1GAA**
(5) Port Access, per Access Capability			
(a) Dial/Shared Access	**67.00**	**76.00**	**MDQ**
(b) Dedicated Access	**96.00**	**124.00**	**MD6**

E13. ADDITIONAL ENGINEERING, ADDITIONAL LABOR AND MISCELLANEOUS CHARGES

E13.3 Miscellaneous Services (Cont'd)

E13.3.11 (DELETED) (D)

E13. ADDITIONAL ENGINEERING, ADDITIONAL LABOR AND MISCELLANEOUS CHARGES

E13.3 Miscellaneous Services (Cont'd)

E13.3.11 (DELETED) (D)

E13. ADDITIONAL ENGINEERING, ADDITIONAL LABOR AND MISCELLANEOUS CHARGES

E13.3 Miscellaneous Services (Cont'd)

E13.3.11 (DELETED) (D)

E13. ADDITIONAL ENGINEERING, ADDITIONAL LABOR AND MISCELLANEOUS CHARGES

E13.3 Miscellaneous Services (Cont'd)

E13.3.11 (DELETED) (D)

E13.3.12 BellSouth 8XX Toll Free Dialing Number Administration Service

BellSouth 8XX Toll Free Dialing Number Administration service is a Company provided service associated with BellSouth SWA 8XX Toll Free Dialing Ten Digit Screening service which provides for the assignment and administration of ten digit 800 number(s), (i.e., 800+NXX+XXXX). BellSouth SWA 8XX Toll Free Dialing Ten Digit Screening service requires the customer's subscription to the basic BellSouth 8XX Toll Free Dialing Number Administration service, following, or as an alternative the provision of those services by other responsible organizations or through direct access by the customer to the Service Management System. Optional features may be subscribed to in the same manner.

The BellSouth 8XX Toll Free Dialing Number Administration service customer is responsible for making the necessary arrangements with BellSouth SWA 8XX Toll Free Dialing Ten Digit Screening service providers to accept the BellSouth SWA 8XX Toll Free Dialing Ten Digit Screening service or POTS number for transport.

Additionally, BellSouth 8XX Toll Free Dialing Number Administration service does not include the provision of a facility over which to terminate the 800 calls (e.g., WATS Access Line BellSouth SPA WATS Line), Common Line, etc.). Charges, as set forth following, will apply for each 800 number established with BellSouth 8XX Toll Free Dialing Number Administration service.

All AT&T and BellSouth marks contained herein and as set forth in the trademarks and service marks section of the BellSouth Tariff are owned by AT&T Intellectual Property or AT&T affiliated companies.

E13. ADDITIONAL ENGINEERING, ADDITIONAL LABOR AND MISCELLANEOUS CHARGES

E13.3 Miscellaneous Services (Cont'd)

E13.3.12 BellSouth 8XX Toll Free Dialing Number Administration Service (Cont'd) (T)

BellSouth 8XX Toll Free Dialing Number ***Administration*** service consists of the following basic service features, optional service features and optional Call Handling and Destination features. (T)

A. Basic Service Features

1. 800 Number Assignment and Administration

BellSouth 8XX Toll Free Dialing Number ***Administration*** service provides for the assignment of ten digit 800 number(s) (i.e., 800+NXX+XXXX) to the ***BellSouth 8XX Toll Free Dialing*** Number ***Administration*** service customer. The Company will select the 800 number(s) to be assigned to the ***BellSouth 8XX Toll Free Dialing*** Number ***Administration*** service customer unless the ***BellSouth 8XX Toll Free Dialing*** Number ***Administration*** service customer requests a specific 800 number. If the requested number is available, the Company will make a reasonable effort to comply with the ***BellSouth 8XX Toll Free Dialing*** Number ***Administration*** service customer's request for the specific 800 number, in accordance with the ***BellSouth SWA 8XX Toll Free Dialing*** Ten Digit ***Screening*** service Number Administration guidelines (T)

2. IntraLATA and InterLATA Carrier Selection

The ***BellSouth 8XX Toll Free Dialing*** Number ***Administration*** service customer must designate the intraLATA carrier and/or the interLATA carrier(s), as applicable, that will transport the 800 number or POTS number. The ***BellSouth 8XX Toll Free Dialing*** Number ***Administration*** service customer is responsible for arranging for the transport service and delivery of the ***BellSouth SWA 8XX Toll Free Dialing Ten Digit Screening*** service calls. (T)

The selection of one interLATA carrier and one intraLATA carrier is provided at no additional charge with the initial order for service. As an optional feature, the customer may subscribe to the Multiple Carrier Routing feature for which multiple interLATA carriers may be selected.

3. Area of Service

Area of Service is defined as the geographical area from which calls to a particular 800 number may be received. The standard area of service provided with ***BellSouth SWA 8XX Toll Free Dialing*** Ten Digit Screening service is the entire state. Customers may specify other levels of area of service with the Customized Area of Service feature. (T)

The Area of Service will be limited to that geographical area(s) served by those access service providers (e.g., Exchange Telephone Companies) that offer ten digit screening of 800 calls and also participate in the ***BellSouth SWA 8XX Toll Free Dialing*** Ten Digit ***Screening*** service Number Administration guidelines. The Area of Service may also be limited to certain geographical areas depending on the access serving arrangements ordered by the access service customer. (T) (T)

The ***BellSouth SWA 8XX Toll Free Dialing Ten Digit Screening*** service provider is responsible for ensuring that appropriate traffic capacity is provided to accept such 800 dialed calls (i.e., where ***BellSouth SWA 8XX Toll Free Dialing*** Ten Digit Screening service has been provisioned as set forth in E6.2.5 preceding) from within the portion of the defined Area of Service served by the Company.

B. Optional Service Features

Various service options are available to the 800 Number Service customer as part of or in association with 800 Number Service.

1. 800 Number Reservation

800 Number Reservation allows for an 800 Number Service customer to reserve 800 numbers in advance of placing an order for 800 Number Service. Reserved 800 number(s) will be maintained in a reserved status for a period not to exceed sixty calendar days from the date the ASR is received. The 800 Number Service customer may request activation of any or all of the reserved numbers during the sixty day period. Activation is accomplished when the number is placed in the working status, at which time the 800 Number Service customer is responsible for providing the ordering information described in E5.2.1 preceding for 800 Number Service.

E13. ADDITIONAL ENGINEERING, ADDITIONAL LABOR AND MISCELLANEOUS CHARGES

E13.3 Miscellaneous Services (Cont'd)

E13.3.12 BellSouth 8XX Toll Free Dialing Number Administration Service (Cont'd)

B. Optional Service Features (Cont'd)

1. 800 Number Reservation (Cont'd)

   Reserved 800 numbers for which an ASR to activate is not received during the sixty day period will be removed from the reserved status on the sixty-first day following the 800 Number Service customer's original reservation date.

   Charges, as set forth following, will apply for each 800 number reserved.

2. POTS Number Delivery

   The 800 Number Service customer may specify whether the POTS number as opposed to the 800 number is desired. If requested, the terminating POTS number (NPA+NXX+XXXX) will be delivered in place of the dialed 800 number (800+NXX+XXXX). When the POTS number is to be forwarded, the 800 Number Service customer must provide to the Company the full ten digit POTS number to be associated with the 800 number and indicate to whom the POTS number is to be delivered.

3. Customized Area of Service

   The Customized Area of Service option provides for a unique customer defined geographic area from which calls to a particular 800 number may be received. The customer may define a specific area of service in terms of LATA(s), NPA(s) or combination thereof.

   The Customized Area of Service will be limited to the geographical area(s) served by those access service providers (e.g., Exchange Telephone Companies) that offer BellSouth SWA 8XX Toll Free Dialing Ten Digit Screening of 800 calls and also participate in the BellSouth SWA 8XX Toll Free Dialing Ten Digit Screening service Number Administration guidelines. The Area of Service may also be limited to certain geographical areas depending on the access serving arrangements ordered by the access service customer.

   The BellSouth SWA 8XX Toll Free Dialing Ten Digit Screening service provider is responsible for ensuring that appropriate traffic capacity is provided to accept such 800 dialed calls (i.e., where BellSouth SWA 8XX Toll Free Dialing Ten Digit Screening service has been provisioned as set forth in E6.2.5 preceding) from within the portion of the defined Area of Service served by the Company.

4. Multiple Carrier Routing (T)

   The Multiple Carrier Routing option allows the BellSouth 8XX Toll Free Dialing Number Administration service customer to specify the use of different carriers for transport of 800 number or POTS number traffic within an area of service.

C. Call Handling and Destination Features

A number of optional Call Handling and Destination features are available to the BellSouth 8XX Toll Free Dialing Number Administration service customer. The customer is responsible for insuring the compatibility of any combination of features selected. The optional features are as follows.

1. Time of Day Routing

   Time of Day Routing provides BellSouth SWA 8XX Toll Free Dialing Ten Digit Screening service subscribers with the ability to distribute calls to different locations based on the specific hour of day a call is placed. Customers may make selections in fifteen minute increments but must account for a complete twenty-four hour period.

2. Day of Week Routing

   Day of Week Routing allows BellSouth SWA 8XX Toll Free Dialing Ten Digit Screening service subscribers to distribute calls to a number of answering locations based on the day of week a call is placed. Calls can be directed for a single day or in groups of days. However, the customer's specification must account for a seven day week.

E13. ADDITIONAL ENGINEERING, ADDITIONAL LABOR AND MISCELLANEOUS CHARGES

E13.3 Miscellaneous Services (Cont'd)

E13.3.12 BellSouth 8XX Toll Free Dialing Number Administration Service (Cont'd) (T)

C. Call Handling and Destination Features (Cont'd)

3. Specific Date Routing

Specific Date Routing provides ***BellSouth SWA 8XX Toll Free Dialing Ten Digit Screening*** service subscribers the capability of distributing 800 calls to different locations based on the specific date in the year the call is placed. (T)

4. Allocation By Percentage

This feature provides ***BellSouth SWA 8XX Toll Free Dialing Ten Digit Screening*** service subscribers the ability to distribute ***BellSouth SWA 8XX Toll Free Dialing Ten Digit Screening*** service calls to more than one location, by specifying the percentage of calls to be directed to each location. Distribution percentages may be selected in gradations as small as one percent for a total of one hundred percent. This feature also provides ***BellSouth SWA 8XX Toll Free Dialing Ten Digit Screening*** service subscribers the ability to select multiple carriers to transport their 800 traffic based on percentage allocations. (T)

5. Ten Digit Node Routing

Ten Digit Node routing provides ***BellSouth SWA 8XX Toll Free Dialing Ten Digit Screening*** service subscribers the capability to route calls to preselected destinations based on the originating ten digit number(s). 800 calls from other than the preselected originating ten digit numbers will be blocked. This feature is available only where ten digit ANI is provided. (T)

D. ***BellSouth 8XX Toll Free Dialing*** Number ***Administration*** Service Charges (T)

1. 800 Number Reservation Charge

A nonrecurring charge applies for the reservation of an 800 Number. There are two levels of nonrecurring charges. A nonrecurring 800 Number Reservation Charge applies for the first reserved 800 number submitted on an Access Service Request (ASR), and a separate nonrecurring 800 Number Reservation Charge applies for each additional reserved 800 number submitted on the same ASR.

2. 800 Number Establishment Charge

800 numbers can be established for use with 800 number delivery o r POTS number delivery. There are two levels of nonrecurring charges applicable to each. A nonrecurring 800 Number Establishment Charge applies for the first 800 number submitted on an Access Service Request (ASR), and a separate nonrecurring 800 Number Establishment Charge applies for each additional 800 number submitted on the same ASR.

3. ***BellSouth 8XX Toll Free Dialing*** Number ***Administration*** Service Change Charge (T)

An 800 Number Service Change Charge applies for changes associated with an 800 number, subsequent to the initial establishment of that 800 number. There are two levels of nonrecurring charges. A nonrecurring 800 Number Service Change Charge applies for the first 800 Number for which associated changes are being made affecting that number, submitted on an ASR. A separate nonrecurring 800 Number Service Change Charge applies for each additional 800 Number for which associated changes are being made affecting that number, submitted on the same ASR.

4. Customized Area of Service

Nonrecurring charges apply for the provision of the Customized Area of Service option. The charges are applied on a First and Additional basis. First and additional installation charge treatment is applied to Customized Area of Service requests submitted on the same or related ASRs. Related ASRs must be received on the same business day.

E13. ADDITIONAL ENGINEERING, ADDITIONAL LABOR AND MISCELLANEOUS CHARGES

E13.3 Miscellaneous Services (Cont'd)

E13.3.12 BellSouth 8XX Toll Free Dialing Number Administration Service (Cont'd)

D. BellSouth 8XX Toll Free Dialing Number Administration Service Charges (Cont'd)

5. Multiple Carrier Routing

   Nonrecurring charges apply for the provision of the Multiple Carrier Routing option. The charges are applied on a First and Additional basis. First and additional installation charge treatment is applied to Multiple Carrier requests submitted on the same or related ASRs. Related ASRs must be received on the same business day.

6. Call Handling and Destination Features

   A nonrecurring charge is applicable for the provision of any combination of the Call Handling and Destination Features defined in C. preceding, requested on the same Access Service Request.

7. Rates and Charges

		Nonrecurring Charge		
		First	**Additional**	**USOC**
(a)	Reservation Charge Per 800 number reserved	**$26.50**	**$.50**	**N8R1X**
(b)	Establishment Charge Per 800 number established with 800 number delivery	**60.00**	**1.50**	**XOT**
(c)	Establishment Charge Per 800 number established with POTS number delivery	**60.00**	**1.50**	**N8FTX**
(d)	Customized Area of Service Per 800 number	**3.00**	**1.50**	**N8FCX**
(e)	Multiple Carrier Routing Per carrier requested, per 800 number	**3.50**	**2.00**	**N8FMX**
(f)	Change Charge Per request	**40.50**	**.50**	**N8FAX**

		Nonrecurring Charge	USOC
(g)	Call Handling and Destination Features Per 800 Number	**$3.00**	**N8FDX**

E13.3.13 BellSouth Billing Name and Address for ANI Service

A. BellSouth Billing Name and Address for ANI Service

1. BellSouth Billing Name and Address for ANI service provides for end user billing name and address and associated information. It is available to ICs such as an Enhanced Service Provider (ESP), Operator Service Provider (OSP), Interexchange Carrier (IC) and any other provider of telecommunications services.

2. BellSouth Billing Name and Address for ANI service is available on those calls for which the ANI of the calling or billed party is provided to the Company. This includes 101XXXX dialed calls, calling card calls and collect and third party billed calls. Information provided consists of the following: (C)

   a. Billing name and street address of the subscriber (BNA)

   b. Billing Telephone Number (BTN)

   c. Working Telephone Number (WTN)

E13. ADDITIONAL ENGINEERING, ADDITIONAL LABOR AND MISCELLANEOUS CHARGES

E13.3 Miscellaneous Services (Cont'd)

E13.3.13 BellSouth Billing Name and Address for ANI Service (Cont'd)

A. BellSouth Billing Name and Address for ANI Service (Cont'd)

2. (Cont'd)

d. Terminal Number (TER)

e. IC Type Indicator (CTI)

f. IC Code

3. BellSouth Billing Name and Address for ANI service is ordered under terms and conditions as set forth in E5.2.1 preceding in order to establish an account.

For calling card calls and collect and third party billed calls, BellSouth Billing Name and Address for ANI service is not available on accounts of nonpublished/nonlisted end users who, by request to the Company (which request may be submitted at any time), have specified that such information not be released.

4. The IC may deem it necessary to request the Company resend the BellSouth Billing Name and Address for ANI information. Such a request, when not the result of Company error, will be subject to the same rates and charges as the original request.

5. Restrictions on use of BellSouth Billing Name and Address for ANI information:

a. The IC, or its authorized billing and collection agent, agrees not to publish any BellSouth Billing Name and Address for ANI information provided and to use such information for the sole purpose of rendering bills for its provision of services to its ICs.

b. The IC, or its authorized billing and collection agent, may not permit anyone but its duly authorized employees to inspect or use BellSouth Billing Name and Address for ANI information.

c. The IC, or its authorized billing and collection agent, may not use the BellSouth Billing Name and Address for ANI information to publish and distribute, in any form, lists of the subscribers provided.

d. The IC, or its authorized billing and collection agent, shall not reproduce in any way copies of the BellSouth Billing Name and Address for ANI information furnished, other than as required internally for the rendering of bills for services provided.

6. The Company will provide BellSouth Billing Name and Address for ANI data no later than ten (10) business days from the date of receipt of the IC's request. Availability of data may be delayed if errors exist in the request received from the IC.

B. Rates and Charges

1. BellSouth Billing Name and Address for ANI

	Nonrecurring Charge	USOC
(a) per record	**$.20**	**EAEBN**

(M)

Material previously appearing on this page now appears on page(s) 27.1, 27.2, 27.4, 27.5, and 27.6 of this section.

E13. ADDITIONAL ENGINEERING, ADDITIONAL LABOR AND MISCELLANEOUS CHARGES

E13.3 Miscellaneous Services (Cont'd)

E13.3.14 Default CARE (Customer Account Record Exchange) (N)

A. Default CARE is available to inter-exchange carriers (IC) upon request, and provides the IC responses for a limited set of Transaction Code Status Indicators (TCSI) that involve PIC Rejects and PIC Disputes. (N)

1. PIC Reject TCSI will be returned to the IC when the IC's subscription order cannot be processed because the request being submitted is invalid. The specific TCSI returned to the IC explains the reason for the reject and includes a varied number of reasons. (N)
2. PIC Dispute TCSI will be returned to the IC when an end-user claims an unauthorized PIC change occurred and when the end user has changed their PIC on an existing line as a result of a dispute over a previous IC initiated PIC selection. (N)

B. Default CARE is provided to the IC at no charge. (N)

All AT&T and BellSouth marks contained herein and as set forth in the trademarks and service marks section of the BellSouth Tariff are owned by AT&T Intellectual Property or AT&T affiliated companies..

E13. ADDITIONAL ENGINEERING, ADDITIONAL LABOR AND MISCELLANEOUS CHARGES

E13.3 Miscellaneous Services (Cont'd)

E13.3.15 (DELETED) (D)

E13. ADDITIONAL ENGINEERING, ADDITIONAL LABOR AND MISCELLANEOUS CHARGES

E13.3 Miscellaneous Services (Cont'd)

E13.3.15 (DELETED) (D)

E13. ADDITIONAL ENGINEERING, ADDITIONAL LABOR AND MISCELLANEOUS CHARGES

E13.3 Miscellaneous Services (Cont'd)

E13.3.15 (DELETED) (D)

E13.3.16 (DELETED) (D)

E13. ADDITIONAL ENGINEERING, ADDITIONAL LABOR AND MISCELLANEOUS CHARGES

E13.3 Miscellaneous Services (Cont'd)

E13.3.16 (DELETED) (D)

E13.3.17 (DELETED) (D)

E13. ADDITIONAL ENGINEERING, ADDITIONAL LABOR AND MISCELLANEOUS CHARGES

E13.3 Miscellaneous Services (Cont'd)

E13.3.17 (DELETED) (D)

E13.3.18 Reserved for Future Use (T)

E13.3.19 Reserved for Future Use

E13.3.20 Reserved for Future Use

E13.3.21 Reserved for Future Use

E13.3.22 Reserved for Future Use

E13. ADDITIONAL ENGINEERING, ADDITIONAL LABOR AND MISCELLANEOUS CHARGES

E13.3 Miscellaneous Services (Cont'd)

E13.3.23 Physical Access Collocation Cross-Connect Service (N)

A. General Description (N)

1. Physical Access Collocation Cross-Connects provide a one to one dedicated transmission path between the ordering customer's tariffed service offerings or transport equipment located in the Telephone Company Central Office and the ordering customer's own physical collocation arrangement or another telecommunication carrier's (collocator's) physical collocation arrangement in the same Telephone Company Central Office for all of the access services listed below, except the following: (N)
   a. Exchange Access Frame Relay service (described in E21.1 of this Tariff) (N)
   b. Exchange Access ATM service (described in E21.3 of this Tariff) (N)
   c. BellSouth Metro Ethernet service (described in E7.2.18 of this Tariff) (N)

   The above-listed access services may only be requested between the ordering customer's tariffed service offerings or transport equipment located in the Telephone Company Central Office and the ordering customer's own physical collocation arrangement in the same Telephone Company Central Office. (N)
2. Standards for performance monitoring of services which interconnect to the collocation arrangement will be driven by the particular service type and service specific requirements. The Telephone Company's obligation for monitoring ends at the demarcation point. (N)
3. Physical Access Collocation Cross-Connects are flat rate, non-distance sensitive charges and will be applied on a per cross-connect ordered basis. (N)
4. Physical Access Collocation Cross-Connects will be ordered on the same Access Service Request (ASR) as the service being cross-connected. All ASRs must be complete and accurate before the Company will initiate the provisioning process. (N)
5. Nonrecurring charges are applicable for Physical Access Collocation Cross-Connect service. (N)
6. The collocator may cross-connect at the DS0 level with the following Telephone Company access services: (N)
   a. Local Channels (described in E7.1.2.A of this Tariff) (N)
   b. Optional Features and Functions (described in E7.1.2.C of this Tariff) (N)
   c. Exchange Access Frame Relay service (described in E21.1 of this Tariff) (N)
7. The collocator may cross-connect at the DS1 level with the following Telephone Company access services: (N)
   a. DS1 Local and Interoffice Channels (described in E7.1.2 of this Tariff) (N)
   b. DS1 Basic Channelization System (described in E7.1.2 of this Tariff) (N)
   c. FlexServ (a.k.a. BellSouth SPA Customer Reconfiguration) Port in a Digital Cross-Connect System (described in E7.4.12 of this Tariff) (N)
   d. Shared Use Analog and Digital High Capacity (a.k.a. BellSouth SPA High Capacity) services (described in E7.4.12 of this Tariff) (N)
   e. SMARTRing (a.k.a. BellSouth Dedicated Ring) services (described in E7.2.16 of this Tariff) (N)
   f. BellSouth SWA service (described in E6.1.3 of this Tariff) (N)
   g. SMARTGate service (a.k.a. BellSouth SPA Managed Shared Ring Network) (described in E7.4.16 of this Tariff) (N)
   h. Exchange Access Frame Relay service (described in E21.1 of this Tariff) (N)
   i. Exchange Access ATM service (described in E21.3 of this Tariff) (N)

All BellSouth marks contained herein and as set forth in the trademarks and servicemarks section of this Tariff are owned by BellSouth Intellectual Property Corporation.

E13. ADDITIONAL ENGINEERING, ADDITIONAL LABOR AND MISCELLANEOUS CHARGES

E13.3 Miscellaneous Services (Cont'd)

E13.3.23 Physical Access Collocation Cross-Connect Service (Cont'd) (N)

A. General Description (Cont'd) (N)

8. The collocator may cross-connect at the DS3 level with the following Telephone Company access services: (N)
   a. 28 DS1 Channelization System (described in E7.1.2 of this Tariff) (N)
   b. FlexServ (a.k.a. BellSouth SPA Customer Reconfiguration) Port in a Digital Cross-Connect System (described in E7.4.12 of this Tariff) (N)
   c. Shared Use Analog and Digital High Capacity (a.k.a. BellSouth SPA High Capacity) services (described in E7.4.8 of this Tariff) (N)
   d. SMARTRing (a.k.a. BellSouth Dedicated Ring) services (described in E7.2.16 of this Tariff) (N)
   e. BellSouth SWA service (described in E6.1.3 of this Tariff) (N)
   f. SMARTGate service (a.k.a. BellSouth SPA Managed Shared Ring Network) (described in E7.4.16 of this Tariff) (N)
   g. Exchange Access Frame Relay service (described in E21.1 of this Tariff) (N)
   h. Exchange Access ATM service (described in E21.3 of this Tariff) (N)
9. The collocator may cross-connect at the fiber level with the following Telephone Company access services: (N)
   a. SMARTRing (a.k.a. BellSouth Dedicated Ring) service rate categories (described in E7.1.2.D of this Tariff) (N)
   b. SMARTGate service (a.k.a. BellSouth SPA Managed Shared Ring Network) (described in E7.4.16 of this Tariff) (N)
   c. Exchange Access Frame Relay service (described in E21.1 of this Tariff) (N)
   d. Exchange Access ATM service (described in E21.3 of this Tariff) (N)
   e. BellSouth Metro Ethernet service (described in E7.2.18 of this Tariff) (N)
10. The collocator may cross-connect at the Ethernet Cat-5 Cable level with the following Telephone Company access services: (N)
   a. BellSouth Metro Ethernet service (as described in E7.2.18 of this Tariff) (N)
   b. SMARTRing (a.k.a. BellSouth SPA Dedicated Ring) service rate categories (described in E7.1.2.D of this Tariff) (N)

All BellSouth marks contained herein and as set forth in the trademarks and servicemarks section of this Tariff are owned by BellSouth Intellectual Property Corporation.

E13. ADDITIONAL ENGINEERING, ADDITIONAL LABOR AND MISCELLANEOUS CHARGES

E13.3 Miscellaneous Services (Cont'd)

E13.3.23 Physical Access Collocation Cross-Connect Service (Cont'd) (N)

B. Rates and Charges (N)

1. Special Access (a.k.a. BellSouth SPA), per Cross-Connect (N)

		Nonrecurring Charges	Monthly Recurring Charges	USOC	
(a)	2-Wire	**$33.82**	**$.1566**	**PE1P2**	(N)
(b)	4-Wire	**67.64**	**.3132**	**PE1P4**	(N)
(c)	Cat-5 Cable	**135.28**	**9.13**	**PE1P8**	(N)
(d)	DS1	**155.00**	**2.65**	**PE1P1**	(N)
(e)	DS3	**155.00**	**27.83**	**PE1P3**	(N)
(f)	2-Fiber	**200.00**	**10.25**	**PE1F2**	(N)
(g)	4-Fiber	**400.00**	**20.50**	**PE1F4**	(N)

2. Switched Access (a.k.a. BellSouth SPA), per Cross-Connect (N)

(a)	2-Wire	**33.82**	**.1566**	**PE1W2**	(N)
(b)	4-Wire	**67.64**	**.3132**	**PE1W4**	(N)
(c)	DS1	**155.00**	**2.65**	**PE1W1**	(N)
(d)	DS3	**155.00**	**27.83**	**PE1W3**	(N)
(e)	2-Fiber	**200.00**	**10.25**	**PE1WB**	(N)
(f)	4-Fiber	**400.00**	**20.50**	**PE1WF**	(N)

All BellSouth marks contained herein and as set forth in the trademarks and servicemarks section of this Tariff are owned by BellSouth Intellectual Property Corporation.

E13. ADDITIONAL ENGINEERING, ADDITIONAL LABOR AND MISCELLANEOUS CHARGES

E13.3 Miscellaneous Services (Cont'd)

E13.3.24 Virtual Access Collocation Cross-Connect Service (N)

A. General Description (N)

1. Virtual Access Collocation Cross-Connects provide a one to one dedicated transmission path between the ordering customer's tariffed service offerings or transport equipment located in the Telephone Company Central Office and the ordering customer's own virtual collocation arrangement or another telecommunication carrier's (collocator's) virtual collocation arrangement in the same Telephone Company Central Office for all of the access services listed below, except the following: (N)
   a. Exchange Access Frame Relay service (described in E21.1 of this Tariff) (N)
   b. Exchange Access ATM service (described in E21.3 of this Tariff) (N)
   c. BellSouth Metro Ethernet service (described in E7.2.18 of this Tariff) (N)

   The above list of access services may only be requested between the ordering customer's tariffed service offerings or transport equipment located in the Telephone Company Central Office and the ordering customer's own physical collocation arrangement in the same Telephone Company Central Office. (N)
2. A monthly recurring charge applies for the Virtual Access Collocation Cross Connect element that consists of the cross connect panel, cable racks, bay framework, jumpers and other supporting hardware. (N)
3. The Virtual Access Collocation Cross-Connect element is designated as BellSouth Switched Access (SWA) or Special Access (SPA), depending on the type of service to which it cross connects. (N)
4. Virtual Access Collocation Cross-Connect service is flat rate, non-distance sensitive charges and will be applied on a per cross connect ordered basis. (N)
5. Standards for performance monitoring of services which interconnect to the collocation arrangement will be driven by the particular service type and service specific requirements. The Telephone Company's obligation for monitoring ends at the demarcation point. (N)
6. Virtual Access Collocation Cross-Connects will be ordered on the same Access Service Request (ASR) as the service being cross connected. All ASRs must be complete and accurate before the Company will initiate the provisioning process. (N)
7. The collocator may cross connect at the DS0 level with the following Telephone Company access services: (N)
   a. Local Channels (described in E7.1.2.A of this Tariff) (N)
   b. Optional Features and Functions (described in E7.1.2.C of this Tariff) (N)
   c. Exchange Access Frame Relay service (described in E21.1 of this Tariff) (N)
8. The collocator may cross-connect at the DS1 level with the following Telephone Company access services: (N)
   a. DS1 Local and Interoffice Channels (described in E7.1.2 of this Tariff) (N)
   b. DS1 Basic Channelization System (described in E7.1.2 of this Tariff) (N)
   c. FlexServ (a.k.a. BellSouth SPA Customer Reconfiguration) Port in a Digital Cross-Connect System (described in E7.4.12 of this Tariff) (N)
   d. Shared Use Analog and Digital High Capacity (a.k.a. BellSouth SPA High Capacity) services (described in E7.4.8 of this Tariff) (N)
   e. SMARTRing (a.k.a. BellSouth Dedicated Ring) services (described in E7.2.16 of this Tariff) (N)
   f. BellSouth SWA service (described in E21.1 of this Tariff) (N)
   g. SMARTGate service (a.k.a. BellSouth SPA Managed Shared Ring Network) (described in E7.4.16 of this Tariff) (N)
   h. Exchange Access Frame Relay service (described in E21.1 of this Tariff) (N)
   i. Exchange Access ATM service (described in E21.3 of this Tariff) (N)

All BellSouth marks contained herein and as set forth in the trademarks and servicemarks section of this Tariff are owned by BellSouth Intellectual Property Corporation.

E13. ADDITIONAL ENGINEERING, ADDITIONAL LABOR AND MISCELLANEOUS CHARGES

E13.3 Miscellaneous Services (Cont'd)

E13.3.24 Virtual Access Collocation Cross-Connect Service (Cont'd) (N)

A. General Description (Cont'd) (N)

9. The collocator may cross-connect at the DS3 level with the following Telephone Company access services: (N)
   a. 28 DS1 Channelization System (described in E7.1.2 of this Tariff) (N)
   b. FlexServ (a.k.a. BellSouth SPA Customer Reconfiguration) Port in a Digital Cross-Connect System (described in E7.4.12 of this Tariff) (N)
   c. Shared Use Analog and Digital High Capacity (a.k.a. BellSouth SPA High Capacity) services (described in E7.4.8 of this Tariff) (N)
   d. SMARTRing (a.k.a. BellSouth Dedicated Ring) services (described in E7.2.16 of this Tariff) (N)
   e. BellSouth SWA service (described in E6.1.3 of this Tariff) (N)
   f. SMARTGate service (a.k.a. BellSouth SPA Managed Shared Ring Network) (described in E7.4.16 of this Tariff) (N)
   g. Exchange Access Frame Relay service (described in E21.1 of this Tariff) (N)
   h. Exchange Access ATM service (described in E21.3 of this Tariff) (N)
10. The collocator may cross-connect at the fiber level with the following Telephone Company access services: (N)
   a. SMARTRing (a.k.a. BellSouth Dedicated Ring) service rate categories (described in E7.1.2.D of this Tariff) (N)
   b. SMARTGate service (a.k.a. BellSouth SPA Managed Shared Ring Network) (described in E7.4.16 of this Tariff) (N)
   c. Exchange Access Frame Relay service (described in E21.1 of this Tariff) (N)
   d. Exchange Access ATM service (described in E21.3 of this Tariff) (N)
   e. BellSouth Metro Ethernet service (described in E7.2.18 of this Tariff) (N)
11. The collocator may cross-connect at the Ethernet Cat-5 Cable level with the following Telephone Company access services: (N)
   a. BellSouth Metro Ethernet service (described in E7.2.18 of this Tariff) (N)
   b. SMARTRing (a.k.a. BellSouth SPA Dedicated Ring) service rate categories (described in E7.1.2.D of this Tariff) (N)

All BellSouth marks contained herein and as set forth in the trademarks and servicemarks section of this Tariff are owned by BellSouth Intellectual Property Corporation.

E13. ADDITIONAL ENGINEERING, ADDITIONAL LABOR AND MISCELLANEOUS CHARGES

E13.3 Miscellaneous Services (Cont'd)

E13.3.24 Virtual Access Collocation Cross-Connect Service (Cont'd)

B. Rates and Charges

1. Special Access (a.k.a. BellSouth SPA), per Cross-Connect

		Nonrecurring Charges	Monthly Recurring Charges	USOC	
(a)	2-Wire	**$24.68**	**$.309**	**UEAC2**	(D)
(b)	4-Wire	**33.67**	**.619**	**UEAC4**	(D)
(c)	Cat-5 Cable	**135.28**	**9.13**	**CNC8W**	(D)
(d)	DS1	**155.00**	**7.50**	**CNC1X**	
(e)	DS3	**151.90**	**56.25**	**CND3X**	
(f)	2-Fiber	**41.94**	**6.71**	**CNC2F**	
(g)	4-Fiber	**64.53**	**6.71**	**CNC4F**	

2. Switched Access (a.k.a. BellSouth SWA), per Cross-Connect

(a)	2-Wire	**24.68**	**.309**	**CNDS2**	(D)
(b)	4-Wire	**33.67**	**.619**	**CNDS4**	(D)
(c)	DS1	**155.00**	**7.50**	**CNDS1**	(D)
(d)	DS3	**151.90**	**56.25**	**CNDS3**	
(e)	2-Fiber	**41.94**	**6.71**	**CNDSB**	
(f)	4-Fiber	**64.53**	**6.71**	**CNDSF**	

All AT&T and BellSouth marks contained herein and as set forth in the trademarks and service marks section of the BellSouth Tariff are owned by AT&T Intellectual Property or AT&T affiliated companies.

E14. SPECIAL CONSTRUCTION

CONTENTS

E14.1 Application 1
E14.1.1 General 1
E14.2 Regulations 1
E14.2.1 Filing of Charges 1
E14.2.2 Ownership of Facilities 1
E14.2.3 Interval to Provide Facilities 1
E14.2.4 Special Construction Involving Both Interstate and Intrastate Facilities 1
E14.2.5 Payments for Special Construction 1
E14.2.6 Credit Allowance for Service Interruptions 2
E14.2.7 Liabilities and Charges for Special Construction 2
E14.2.8 Deferral of Start of Service 5
E14.2.9 Definitions 5.1
E14.3 (DELETED) 6

E14. SPECIAL CONSTRUCTION

E14.1 Application

E14.1.1 General

A. This Section contains regulations, rates, charges and liabilities applicable for the special construction of facilities provided by the Company, which are used to provide intrastate services offered under this Tariff.

B. When special construction of facilities is required, the provisions of this section apply in addition to all regulations, rates and charges set forth in other sections of this Tariff.

E14.2 Regulations

E14.2.1 Filing of Charges

A. Rates, charges and liabilities for special construction to provide facilities ***will be*** filed in Section E14. following, ***if required.*** (T)

(D)

1. (DELETED) (D)
2. (DELETED)

E14.2.2 Ownership of Facilities (T)

The Company, providing ***specially*** constructed facilties under the provision of this Tariff, retains ownership of all such facilities.

E14.2.3 Interval to Provide Facilities (T)

Based on available information and the type of service ordered, the Company will establish a completion date for the specially constructed facilities. If the scheduled completion date cannot be met due to circumstances beyond the control of the Company, a new completion date will be established and the ***customer*** will be notified.

E14.2.4 Special Construction Involving Both Interstate and Intrastate Facilities

When special construction involves facilities to be used to provide both interstate and intrastate service, charges for the portion of the construction used to provide intrastate service shall be in accordance with this Tariff. Charges for the portion of the construction used to provide interstate service shall be in accordance with the appropriate FCC Tariff.

E14.2.5 Payments for Special Construction

A. Payment of Charges (T)

All bills associated with special construction charges are due in accordance with the appropriate ***rate*** regulations in the service Tariff under which service is being provided.

Regulations set forth in E2.4.1 preceding shall apply.

E14. SPECIAL CONSTRUCTION

E14.2 Regulations (Cont'd)

E14.2.5 Payments for Special Construction (Cont'd)

B. Start/End of Billing (M)

Billing of recurring charges for specially constructed facilities starts on the day after the facilities are made available for use. Billing accrues through and includes the day that the specially constructed facilities are discontinued. (T)(M)

Material appearing on this page previously appeared on page(s) 1 of this section

E14. SPECIAL CONSTRUCTION

E14.2 Regulations (Cont'd)

E14.2.6 Credit Allowance for Service Interruptions

In the event of a service interruption involving a specially constructed facility, the customer shall receive a recurring monthly charge credit in accordance with the credit allowance provisions in E2.4.4 of this Tariff.

(DELETED) (D)

E14.2.7 Liabilities and Charges for Special Construction

A. General

This section describes the various charges and liabilities that may apply when the Company provides special construction of facilities in accordance with an order for service. Written approval of all liabilities and charges must be provided to the Company prior to the start of construction.

B. Conditions Requiring Special Construction

Special construction is required when 1) facilities are not available to meet an order for service, and 2) the Company constructs facilities, and 3) one or more of the following conditions exist:

1. The Company has no other ***planned use*** for the facilities ***requested;*** (T)
2. It is requested that service be furnished using a type of facility, or via a route, other than that which the Company would normally utilize in furnishing the requested service;
3. More facilities are requested than would normally be required to satisfy an order;
4. It is requested that construction be ***advanced,*** resulting in added cost to the Company. (T)

C. Development of Liabilities and Charges

Special Construction charges and liabilities will be developed based on estimated costs, except when actual costs are requested in writing prior to the start of special construction. In order to meet a scheduled service date when actual costs are requested, an initial special construction case may be prepared based on estimated costs. Such case will be revised when actual costs are available.

D. Types of Liabilities and Charges

Depending on the specifics associated with each individual case, one or more of the following special construction charges and/or liabilities may be applicable.

E14. SPECIAL CONSTRUCTION

E14.2 Regulations (Cont'd)

E14.2.7 Liabilities and Charges for Special Construction (Cont'd)

D. Types of Liabilities and Charges (Cont'd)

1. Nonrecurring Charge ***for Special Construction of Facilities for Use for More Than One Month*** (C)

When special construction of a facility is requested for use for more than one month, a nonrecurring charge will apply. This charge will be composed of several components as described following based on the criteria listed in B. preceding. (N) (T)

a. Case Preparation Charge ***Component*** (T)

This component will always ***apply and covers the cost of*** admininistrative expenses associated with preparing a special construction case, ***and the associated tariff filing.*** (T)

b. Expediting Charge ***Component*** (T)

This component may ***apply when a customer requests completion of the*** special construction on an expedited basis. The charge is equal to the difference in the estimated cost between expedited and nonexpedited construction. (D)

c. (DELETED) (C)

d. ***Nonrecoverable Cost Component*** (C)

This component may apply to specially constructed facilities for use for more than one month, and is equal to the present worth of the capital costs of the nonrecoverable facilities installed to provide service and will be calculated based on the average life of the facility. (C)

e. ***Advancement Charge Component*** (C)

This component may apply when the customer requests that planned construction be started and completed earlier than scheduled. The charge equals the difference in estimated cost between advanced and planned construction. (C)

f. ***Lease Charge Component*** (C)

This component may apply when the Company leases equipment in order to meet service requirements. The amount is equal to the net added cost to the Company caused by the lease. (N)

An Optional Payment arrangement may apply as specified in E. following for specially constructed facilities placed for use for more than one month.

E14. SPECIAL CONSTRUCTION

E14.2 Regulations (Cont'd)

E14.2.7 Liabilities and Charges for Special Construction (Cont'd)

D. Types of Liabilities and Charges (Cont'd)

2. (DELETED) (D)

E14. SPECIAL CONSTRUCTION

E14.2 Regulations (Cont'd)

E14.2.7 Liabilities and Charges for Special Construction (Cont'd)

D. Types of Liabilities and Charges (Cont'd)

2. (DELETED) (D)
3. (DELETED) (D)

E14. SPECIAL CONSTRUCTION

E14.2 Regulations (Cont'd)

E14.2.7 Liabilities and Charges for Special Construction (Cont'd)

D. Types of Liabilities and Charges (Cont'd)

3. (DELETED) (D)

E14. SPECIAL CONSTRUCTION

E14.2 Regulations (Cont'd)

E14.2.7 Liabilities and Charges for Special Construction (Cont'd)

D. Types of Liabilities and Charges (Cont'd)

4. Nonrecurring Charge for ***Special Construction of Facilities for Use for Less Than One Month*** (C)

In addition to the nonrecurring charge components listed in 1. preceding, all non-capital types of costs incurred to install the specially constructed facility will apply, i.e., circuit engineering, shipping of equipment, equipment installation, line up, space rental, equipment removal, etc. (C)

An Optional Payment Arrangement described ***in E. following will not*** apply ***for specially constructed facilities placed for use for less than one month.*** (C)

5. (DELETED) (D)

6. Cancellation Charge

If a service order with which special construction is associated is cancelled prior to the start of service, a cancellation charge will apply. The charge will include all nonrecoverable costs incurred by the Company in association with the special construction up to and including the time of cancellation.

E. Optional Payment Arrangement (N)

1. Optional Payment Arrangement for Nonrecurring Charge

As an alternative to a lump sum payment of the entire nonrecurring charge as specified in D.1. preceding, an optional payment arrangement may be elected by the customer. This arrangement provides for amortizing all or a portion of the nonrecurring charge over a payment period, to be specified by the customer, not to exceed ten years, with any portion of the nonrecurring charge which is not amortized due and payable in an up-front lump sum amount. If the customer discontinues use of the specially constructed facilities prior to the end of the chosen payment period, the unpaid principle shall become due and payable in a lump sum. (N)

The Company may reasonably require that the customer provide security for payment of the amount amortized as a precondition to the customer's use of the Optional Payment Arrangement. (N)

E14.2.8 Deferral of the Start of Service

The Company may be requested to defer the start of service which will use specially constructed facilities subject to the provisions set forth in the ***service tariff under which*** service ***is*** being provided. Requests for ***special construction*** deferral must be in writing and are subject to the following regulations: (T)

A. Construction Has Not Begun

If the Company has not incurred any installation costs before receiving the customer's request for deferral, no charge applies.

B. Construction Has Begun

If the construction of facilities has begun before the Company receives the customer's request for deferral, charges will vary as follows:

1. All Services Are Deferred

When all services which will use specially constructed facilities are deferred, a charge equal to the costs incurred by the Company during each month of the deferral applies. Those costs include the recurring costs for that portion of the facilities already completed and any other costs associated with the deferral. The cost of any components of the nonrecurring charge which have been completed at the time of deferral will also apply.

E14. SPECIAL CONSTRUCTION

E14.2 Regulations (Cont'd)

E14.2.8 Deferral of Start of Service (Cont'd)

B. Construction Has Begun (Cont'd)

2. Some Services Are Deferred (M)

When some services which will use the specially constructed facilities are deferred, the special construction case will be completed and all special construction charges will apply. (M)

C. Construction Complete (M)

If the construction of facilities has been completed before the Company receives a request for deferral, all special construction charges will apply. (M)

Material appearing on this page previously appeared on page(s) 5 of this section

E14. SPECIAL CONSTRUCTION

E14.2 Regulations (Cont'd)

E14.2.9 Definitions

ACTUAL COST - The term "Actual Cost" denotes all costs charged against a specific case of special construction, including any appropriate taxes.

(DELETED) (D)

AVERAGE ACCOUNT LIFE - The term "Average Account Life" denotes the depreciation life prescribed by the Public Service Commission for each class of telephone plant.

ESTIMATED COST - The term "Estimated Cost" denotes all estimated costs that will be incurred in providing a specific case of special construction, including any appropriate taxes.

FACILITIES - The term "Facilities" denotes any cable, poles, conduit, microwave or carrier equipment, wire center distribution frames, central office switching equipment, etc., utilized to provide interstate services offered under the tariffs referenced by this Tariff.

INITIAL LIABILITY PERIOD - The term "Initial Liability Period" denotes the initial planning period during which the IC expects to place specially constructed facilities in service.

INSTALLED COST - The term "Installed Cost" denotes the total investment (estimated or actual) required by the Company to provide specially constructed facilities.

(DELETED) (D)

(DELETED) (D)

(DELETED) (D)

E14. SPECIAL CONSTRUCTION

E14.2 Regulations (Cont'd)

E14.2.9 Definitions (Cont'd)

NET SALVAGE - The term "Net Salvage" denotes the estimated scrap, sale, or trade-in value, less the estimated cost of removal. Cost of removal includes the costs of demolishing, tearing down, or otherwise disposing of the material and any other applicable costs. Since the cost of removal may exceed salvage value, net salvage may be negative.

NONRECOVERABLE COST - The term "Nonrecoverable Cost" denotes the cost of ***facilities*** specially constructed for ***an individual customer for*** which the Company has no ***other planned*** use should the service be terminated. (T)

NORMAL CONSTRUCTION - The term "Normal Construction" denotes all facilities the Company would normally use to provide service in the absence of a requirement for special construction.

NORMAL COST - The term "Normal Cost" denotes the estimated cost to provide services using normal construction.

PERMANENT FACILITIES - The term "Permanent Facilities" denotes facilities providing service for one month or more.

(DELETED) (D)

(DELETED) (D)

E14. Special Construction

E14.3 (DELETED) (D)

E14. Special Construction

E14.3 (DELETED) (D)

OFFICIAL APPROVED VERSION, RELEASED BY BSTHQ

E15. RESERVED FOR FUTURE USE (N)

CONTENTS

REPRO DATE: 03/07/97 REPRO TIME: 01:32 PM

E15. RESERVED FOR FUTURE USE (N)

E16. COMPENSATION FOR THE UNAUTHORIZED COMPLETION OF INTRALATA CALLS

CONTENTS

E16.1 (DELETED) 1

E16. COMPENSATION FOR THE UNAUTHORIZED COMPLETION OF INTRALATA CALLS

E16.1 (DELETED) (D)

E17. RESERVED FOR FUTURE USE (N)

CONTENTS

E17. RESERVED FOR FUTURE USE (N)

E18. BELLSOUTH OPERATOR SERVICES ACCESS SERVICE

CONTENTS

E18.1	**BellSouth Inward Operator Services**	1	
E18.1.1	General Description	1	
E18.1.2	Undertaking of the Company	1	
E18.1.3	Obligations of the IC	2	
E18.1.4	Rate Regulations	2	
E18.1.5	Rates and Charges	2	
E18.2	**BellSouth Operator Transfer Service**	3	
E18.2.1	General Description	3	
E18.2.2	Undertaking of the Company	3	
E18.2.3	Obligations of the IC	3	
E18.2.4	Rate Regulations	4	
E18.2.5	Rates and Charges	4	
E18.3	**BellSouth Operator Assistance Access Service**	5	(N)
E18.3.1	General Description	5	(N)
E18.3.2	Operator Assistance Trunks (OA Trunks)	5	(N)
E18.3.3	Obligations of the Customer	6	(N)
E18.3.4	Rate Regulations and Payment Arrangements	6	(N)
E18.3.5	Rates and Charges	9	(N)

All BellSouth marks contained herein and as set forth in the trademarks and servicemarks section of this Tariff are owned by BellSouth Intellectual Property Corporation.

E18. BELLSOUTH OPERATOR SERVICES ACCESS SERVICE (T)

E18.1 BellSouth Inward Operator Services (T)

E18.1.1 General Description

A. ***BellSouth*** Inward Operator Services provide Verification and Emergency Interruption functions associated with ***BellSouth Inward Operator Services*** calls. An interLATA service provider (Interexchange Carrier (IC)) seeking to verify the status of a BellSouth local exchange subscriber line will access the BellSouth Operator Services System (OSS) serving the Local Access Transport Area (LATA) of the BellSouth subscriber line to be verified. Access will be accomplished at the appropriate ***BellSouth Inward Operator Services*** location via a trunk group connecting the customer's point of presence (POP) to the ***BellSouth Operator Services*** System. The IC operator will ask the BellSouth operator to verify that the subscriber line in question is in use. Utilizing the Company's Verification and Interruption (V&I) network, a special network dedicated to this application, BellSouth's operator will monitor the status of the subscriber line and report this status to the IC operator. The IC operator will relay this information to the end user. (T)

B. If the line is in use, the IC's end user may request that the call in progress be interrupted to inform the BellSouth local exchange subscriber of an emergency need to reach that number. In this case, the IC operator will ask the BellSouth operator to interrupt the subscriber's call in progress. BellSouth's operator will interrupt the call in progress, inform the subscriber that the IC's end user has an emergency need to reach that line, and ask the subscriber if he/she is willing to terminate the call in progress. If the local exchange subscriber agrees to hang up, BellSouth's operator will inform the IC operator. The IC operator can then inform the end user that the subscriber line in question will be free momentarily and the end user may redial the local exchange subscriber's number to complete the emergency call.

E18.1.2 Undertaking of the Company

A. A Company ***BellSouth Inward Operator Services*** operator will provide Verification Service and Emergency Interruption Service at the rates and charges set forth in E18.1.6 following. The Company's contact shall be only with the IC's Operator, not with the IC's end user, and shall be limited to that effort necessary to provide the requested service. (T)

B. The Company will specify the ***BellSouth Inward Operator Services*** location(s) which provide(s) ***BellSouth Inward Operator Services*** for each Local Access Transport Area (LATA). (T)

When it becomes necessary, as determined by the Company, to change a ***BellSouth Inward Operator Services*** location, the Company will notify the involved ICs six months prior to the change. For such changes, the regulations as set forth in E2.1.7 of this Tariff apply. (T)

C. When ***BellSouth Inward Operator Services*** is ordered, service will be provided between the IC's premises and the ***BellSouth Inward Operator Services*** location by the Company as follows: (T)

1. General

A separate ***BellSouth Inward Operator Services*** access trunk group (***BellSouth SWA*** FGD or ***BellSouth SWA*** TSBSA 3) will be required for each ***BellSouth Inward Operator Services*** location specified by the IC. Further, the ***BellSouth*** Inward Operator Services access trunk group can only be provided in connection with direct routing. (T)

BellSouth Inward Operator Services customers who also subscribe to ***BellSouth*** Operator Transfer Service using ***BellSouth SWA*** FGD or ***BellSouth SWA*** TSBSA 3 service may use these trunks to receive ***BellSouth Operator Transfer Service*** traffic where the trunks connect the customer location to a LATA tandem which serves as both a ***BellSouth Inward Operator Services*** location and a ***BellSouth Operator Services System*** location. (T)

Where the ***BellSouth Inward Operator Services*** and ***BellSouth Operator Services System*** location is not a LATA tandem, ***BellSouth Inward Operator Services*** customers who also subscribe to ***BellSouth Operator Transfer Service*** may use these trunks to receive ***BellSouth Operator Transfer Service*** traffic. (T)

2. Interface Group and Premises Interface Codes (M)

Interface Groups 2, 6 and/or 9 as set forth in E6.1.3.A. of this Tariff are available for ***BellSouth Inward Operator Services*** Access Service. (M) (T)

Premises Interface Codes available for Inward Operator Services are: (M)

4AH5-B (M)

4DS6-44 (M)

4DS9-15 (M)

4RV2-O (M)

These Premises Interface Codes are described in E6.1.3.A. of this Tariff. (M)

D. ***BellSouth Inward Operator Services*** Access Service may, at the option of the customer, be provided for interstate and intrastate services where available. When the customer requests such mixed access, the intrastate ***BellSouth Inward Operator Services*** charges will be determined by the Company using the data furnished by the customer as set forth in E2.3.14 of this Tariff. (M) (T)

Material appearing on this page previously appeared on page(s) 2 and 3 of this section.

E18. BELLSOUTH OPERATOR SERVICES ACCESS SERVICE (T)

E18.1 BellSouth Inward Operator Services (Cont'd) (T)

(M)

E18.1.3 Obligations of the IC (M)

A. The IC will establish an IC location, if none exist, and will order ***BellSouth SWA*** FGD or ***BellSouth SWA*** TSBSA 3 trunks, if none exist, to interconnect with the ***BellSouth Operator Services System*** location(s) serving all LATAs within the ***BellSouth Operator Services System*** serving area for which the IC requests ***BellSouth Inward Operator Services.*** (M) (T)

B. The IC facilities at the IC location shall provide the necessary on-hook and off-hook supervision. (M)

C. The IC shall order a trunk group for ***BellSouth Inward Operator Services*** to ***BellSouth Inward Operator Services*** locations serving each LATA in which ***BellSouth Inward Operator Services*** is desired. (M) (T)

When the ***BellSouth Inward Operator Services*** location and the access tandem share the same switch, ICs may use existing ***BellSouth SWA*** FGD or ***BellSouth SWA*** TSBSA 3 trunks to carry ***BellSouth Inward Operator Services*** traffic. (M) (T)

Where the ***BellSouth Inward Operator Services*** and ***BellSouth Operator Services System*** location is not a LATA tandem, ***BellSouth Inward Operator Services*** customers who also subscribe to ***BellSouth Operator Transfer Service*** may use these trunks to receive ***BellSouth Operator Transfer Service*** traffic. (M) (T)

E18.1.4 Rate Regulations (M) (T)

A. ***BellSouth Inward Operator Services*** Access Service charges for Verification Service and Emergency Interrupt Service are set forth in E18.1.6 following. The charge for Verification Service applies when a ***BellSouth Inward Operator Services*** operator monitors a connection for the purpose of determining the status of a called line within a LATA. The charge for Emergency Interrupt Service applies when a ***BellSouth Inward Operator Services o***perator enters a connection for the purpose of attempting to interrupt a conversation in progress on a called line within the LATA. When both Verification Service and Emergency Interrupt Service are provided, only the charge for Emergency Interrupt applies. The number of calls will be accumulated by Company measuring equipment. (M) (T)

B. Switched access premium rates and charges, as set forth in E6.8 preceding will apply to all end user requests for interLATA service transferred from the ***BellSouth Inward Operator Services*** location to the IC location via the IC's ***BellSouth SWA*** FGD or ***BellSouth SWA*** TSBSA 3 trunks. In addition, Rate Regulations as specified in E6.7 preceding will apply. (M) (T)

E18.1.5 Rates and Charges (M)

A. Inward Operator Services Charges (M)

(1) Verification Service (M)

	Monthly Rate	USOC	
(a) Each	**$ .90**	**NA**	(M)
(2) Verification and Emergency Interruption Service			(M)
(a) Each	**1.95**	**NA**	(M)

Material appearing on this page previously appeared on page(s) 3, 4 and 5 of this section.
Material previously appearing on this page now appears on page(s) 1 of this section.

E18. BELLSOUTH OPERATOR SERVICES ACCESS SERVICE

E18.2 BellSouth Operator Transfer Service

E18.2.1 General Description

BellSouth Operator Transfer Service provides routing of IC Operator Services calls from the Company's BellSouth Operator Services System location to an IC location within the Local Access Transport Area (LATA) of the IC's end user. (C)

E18.2.2 Undertaking of the Company

A. The Company will provide BellSouth Operator Transfer Service from its BellSouth Operator Services System location(s) as specified in the National Exchange Carrier Association, Inc., F.C.C. No. 4.

B. The Company operator will deliver customer end user requests for ***transfer*** to the IC location in the LATA of the IC's end user subject to the rates and charges set forth in E18.2.5 following. (C)

C. BellSouth Operator Transfer Service traffic will be routed from the BellSouth Operator Services System location to the IC location via the IC's FGD or TSBSA Technical Option 3 trunks.

D. The Company will provision FGD or TSBSA Technical Option 3 facilities as set forth in Section E6. preceding.

E. BellSouth Operator Transfer Service customers who also subscribe to BellSouth Inward Operator Services may use their BellSouth Inward Operator Services, BellSouth SWA FGD or TSBSA 3 trunks to receive BellSouth Operator Transfer Service traffic where the BellSouth Inward Operator Services trunks connect the customer location to a LATA tandem which serves as both a BellSouth Inward Operator Services location and a BellSouth Operator Services System location.

F. The Company will specify the BellSouth Operator Services System location(s) which provide BellSouth Operator Transfer Service for each LATA.

1. At the IC's request, the Company will provide a list of the LATAs served by each of its BellSouth Operator Services System locations which provide BellSouth Operator Transfer Service.
2. When it becomes necessary, as determined by the Company, to change an BellSouth Operator Services System location, the Company will notify the involved ICs six months prior to the change. For such changes, the regulations as set forth in Section E2. of this Tariff apply.

G. Appropriate rates and charges for BellSouth SWA FGD or BellSouth SWA TSBSA 3 service apply when such trunks are used to transport an end user's request from the BellSouth Operator Services System location to the IC location. In addition, charges as specified in E18.2.5 following apply to each end user request transferred to the IC. (C)

H. When the IC has both interstate and intrastate BellSouth Operator Transfer Service traffic, the percentage interstate usage determined for the IC's BellSouth SWA FGD or BellSouth SWA TSBSA 3 service, as specified in Section E2. of this Tariff, will be applied to the BellSouth Operator Transfer Service charges.

E18.2.3 Obligations of the IC

A. The IC will establish an IC location, if none exist, and will order exist, and will order BellSouth SWA FGD or BellSouth SWA TSBSA 3 trunks, if none exist, to interconnect with the BellSouth Operator Services System location(s) serving all LATAs within the BellSouth Operator Services System serving area where the IC requests BellSouth Operator Transfer Service.

B. IC facilities at the IC location shall provide the necessary on-hook, off-hook, answer and disconnect supervision.

C. When ordering BellSouth Operator Transfer Service, the IC shall determine and specify the number of new or additional BellSouth SWA FGD or BellSouth SWA TSBSA 3 trunks desired, if any, to carry IC operator services end user requests from the BellSouth Operator Services System location to the IC location as specified in Section E5. of this Tariff. (C)

D. The IC must order capacity sufficient to handle customer operator services end user requests originating from all Company end offices within each LATA of the BellSouth Operator Services System serving area where BellSouth Operator Transfer Service is requested. (C)

E. Jurisdictional reporting will apply as specified for BellSouth SWA FGD or BellSouth SWA TSBSA 3 services in Section E2. of this Tariff for determining the Percent Interstate Usage (PIU).

E18. BELLSOUTH OPERATOR SERVICES ACCESS SERVICE

E18.2 BellSouth Operator Transfer Service (Cont'd)

E18.2.4 Rate Regulations

A. The Operator Transfer charge is applied on a per end user request transferred basis, as set forth in E18.2.5 following. A request shall be considered transferred when the Company operator activates the BellSouth Operator Services System switch which routes the call from the BellSouth Operator Services System location to the IC location. (C)

B. Switched access premium rates and charges, recurring and nonrecurring, as set forth in Section E6. of this Tariff will apply to all end user requests transferred from the BellSouth Operator Services System location to the IC location via the IC's BellSouth SWA FGD or BellSouth SWA TSBSA 3 trunks. In addition, Rate Regulations as specified in Section E6. will apply. (C)

E18.2.5 Rates and Charges

A. End User Request for Service Transfer

1. Operator Transfer

	Rate	USOC
(a) Each	**$ .35**	**NA**

E18. BELLSOUTH OPERATOR SERVICES ACCESS SERVICE

E18.3 BellSouth Operator Assistance Access Service (N)

E18.3.1 General Description (N)

A. BellSouth Operator Assistance Access Service (BellSouth OA Access Service) provides access to the BellSouth OA Access Service location(s) and the use of BellSouth OA Access Service equipment and operators, when required, to furnish operator assistance to end users on the customer's behalf, to obtain information for the customer's later use in billing for service provided by the Company to the customer's end users on the customer's behalf and for obtaining information for the customer's later use to potentially complete calls returned by the Company to the customer's location per the end user's request. (N)

B. BellSouth OA Access Service Locations (N)

The Company will specify the BellSouth OA Access Service location(s) which provide(s) the BellSouth OA Access Service as shown in NATIONAL EXCHANGE CARRIER ASSOCIATION, INC. TARIFF F.C.C. No. 4. (N)

When it becomes necessary, as determined by the Company, to change a BellSouth OA Access Service location, the Company will notify the involved customers six months prior to the change. For such changes, the regulations as set forth in E2.1.7 of this tariff apply. (N)

C. Pre-Requisites for BellSouth OA Access Service Provision (N)

Each BellSouth OA Access Service requires Company provided, customer and application dedicated Operator Assistance trunks (OA Trunks) interconnecting the customer's high capacity facilities to the BellSouth OA Access Service location(s), as described further in E18.3.2 following. In addition, the customer must have in place or must order from the Company Common Channel Signaling System Seven (CCS7) links interconnecting the customer's premises and the Company's CCS7 network, as described in E6.1.3 of this Tariff. Further, customers who wish to utilize release link trunking technology must have in place Nortel DMS 250/500 switching equipment loaded with Nortel level UCS08 (or higher) and feature packages URLT 1, 2, 3 and 4. (N)

D. BellSouth OA Access Service "flow" (N)

When the customer routes an end user request for operator assistance to the BellSouth OA Access Service location via the facilities described in paragraphs A, and B preceding, the Company will optionally brand the call with the customer's name, serve the end user's request on the customer's behalf, obtain information needed for the customer to bill for the service provided, obtain information needed for the customer to complete the end user's call, if call completion is requested, and then will return the information obtained, as well as the call, if call completion is requested, to the customer location with an optional "thank you" branding message. (N)

E. Optional Branding Announcements (N)

At the customer's option, Branding Announcements are provided on both the front end and back end of each BellSouth OA Access Service call served. A front end recording will greet each customer end user call with a message of up to three (3) seconds duration which identifies the customer's service (for example, "(customer name)". (N)

Recording of initial Branding Announcements and changes thereto will be performed on an implementation schedule agreed to between the Company and the customer. (N)

The customer may request changes to the Branding Announcements currently being provided via BellSouth OA Access Service. The Company will implement such changes within thirty (30) days of receiving the customer's request at the rates and charges detailed for branding in E18.3.5 following. (N)

F. BellSouth OA Access Service will be provided at rates and charges as set forth in E18.3.5 following, except as provided for in E18.3.4.D. following. (N)

G. The minimum subscription period for which BellSouth OA Access Service is provided and for which charges apply is one (1) month. (N)

E18.3.2 Operator Assistance Trunks (OA Trunks) (N)

A. BellSouth Operator Assistance Trunks (OA Trunks) provide the means to interconnect the customer's high capacity facility or facilities (e.g., DS1, BellSouth MegaLink, BellSouth LightGate, BellSouth SMARTPath or BellSouth SMARTRing) at a DS1 level to the network location of its operator assistance provider. (N)

B. BellSouth OA Trunks must be present in sufficient number to handle the customer's maximum forecasted call volume. (N)

C. BellSouth OA Trunks have the same transmission specifications as do BellSouth SWA FGD trunks, as described in E6.2.4 of this tariff. (N)

D. BellSouth OA Trunks support bi-directional transport of customer calls using CCS7 signaling. Each BellSouth OA Trunk must be used exclusively for operator assistance calls because these trunks are not equipped to serve or route other call types. (N)

E. Rates and charges for BellSouth OA Trunks are as detailed in E18.3.5 following. (N)

All BellSouth marks contained herein and as set forth in the trademarks and servicemarks section of this Tariff are owned by BellSouth Intellectual Property Corporation.

E18. BELLSOUTH OPERATOR SERVICES ACCESS SERVICE

E18.3 BellSouth Operator Assistance Access Service (Cont'd) (N)

E18.3.2 Operator Assistance Trunks (OA Trunks) (Cont'd) (N)

F. BellSouth OA Trunks must be interconnected with a customer's high capacity facility or facilities (e.g., DS1, BellSouth MegaLink, BellSouth LightGate, BellSouth SMARTPath or BellSouth SMARTRing) at a DS1 level in order that BellSouth OA Trunks function properly. BellSouth OA Trunks can be ordered in increments of twenty-four (24) to meet this requirement, with a minimum order of twenty-four (24) BellSouth OA Trunks. Alternatively, customers may utilize a combination of BellSouth OA Trunks and Type 1 BellSouth Flat Rated DA Trunks (as described in E9.6 of this Tariff) to meet this twenty-four (24) trunk requirement. However, each trunk in such a combination must be designated for use to carry either operator assistance calls or directory assistance calls, but not both. (N)

E18.3.3 Obligations of the Customer (N)

A. The customer will cooperatively test with the Company at the time of BellSouth OA Access Service installation. (N)

B. The customer will provide the Company a forecast of their monthly automated and live operator handled OA Access Service calls.

C. The customer must order BellSouth OA Trunks, as described in E18.3.2 preceding, from the Company. BellSouth OA Trunks must be interconnected with a customer's high capacity facility or facilities (e.g., DS1, BellSouth MegaLink, BellSouth LightGate, BellSouth SMARTPath or BellSouth SMARTRing) at a DS1 level in order that BellSouth OA Trunks function properly. BellSouth OA Trunks can be ordered in increments of twenty-four (24) to meet this requirement, with minimum order of twenty-four (24) BellSouth OA Trunks. Alternatively, customers may utilize a combination of BellSouth OA Trunks and Type 1 BellSouth Flat Rated DA Trunks (as described in E9.6 of this Tariff) to meet this twenty-four (24) trunk requirement. However, each trunk in such a combination must be designated for use to carry either operator assistance calls or directory assistance calls, but not both, because OA Trunks and Flat Rated DA Trunks route operator assistance and directory assistance calls, respectively, to groups of Company operators trained and equipped to handle either operator assistance calls or directory assistance calls, but not both. (N)

D. Customers who wish to utilize Nortel release link trunking technology must have in place Nortel DMS 250/500 switching equipment loaded with Nortel software release level UCS08 (or higher) and feature packages URLT 1, 2, 3 and 4. (N)

E. The customer will deliver calls to the BellSouth OA Service location with industry standard CCS7 call detail. (N)

F. When opting for the BellSouth OA Access Service Savings Plan, the customer must select plan options for both automated and live operator handled calls. (N)

G. When opting for the BellSouth OA Access Service Savings Plan, the customer must deliver to the Company within the time frames specified for the plan options selected call volumes that meet or exceed the minimum amounts required for the plan options selected, subject to the regulations detailed in E18.3.4.D. following. (N)

E18.3.4 Rate Regulations and Payment Arrangements (N)

A. Rates for BellSouth OA Access Service are as detailed in E18.3.5 following, except as described in D. and E. following. (N)

B. When opting for the BellSouth OA Access Service Savings Plan, in no event will the untimely installation or failure of customer equipment required to deliver calls to the BellSouth OA Access Service location relieve the customer of their commitment to deliver to the Company within the time frames specified for the plan options selected call volumes that meet or exceed the minimum amounts required for the plan options selected as detailed in D following. (N)

C. Service Credit for BellSouth OA Access Service (N)

A service credit equal to the amounts charged for the BellSouth OA Access Service and/or options as detailed in E18.3.5 or in E. following, if applicable, will apply to the customer's next bill when the Company has received from the customer within sixty (60) days of the occurrence a substantiated claim as follows: (N)

1. A call(s) sent by the customer to the BellSouth OA Access Service location(s) was not answered because the BellSouth OA Access Service location(s) or Company equipment was out of service, or (N)
2. BellSouth OA Access Service provided no response, or (N)
3. A request(s) for call completion was not returned to the customer's premises due to failure of the Company's equipment or of the BellSouth OA Access Service. (N)

D. In the event that OA Access Service is terminated prior to the one (1) month minimum subscription period, usage equal to the customer's forecasted monthly call volume as described in E18.3.3.B. will be applied to the standard per call rates detailed in E18.3.5 to determine the usage portion of the customer's bill. (N)

All BellSouth marks contained herein and as set forth in the trademarks and servicemarks section of this Tariff are owned by BellSouth Intellectual Property Corporation.

E18. BELLSOUTH OPERATOR SERVICES ACCESS SERVICE

E18.3 BellSouth Operator Assistance Access Service (Cont'd) (N)

E18.3.4 Rate Regulations and Payment Arrangements (Cont'd) (N)

E. BellSouth OA Access Service Savings Plan (N)

1. The BellSouth OA Access Service Savings Plan provides BellSouth OA Access Service customers the option to receive a reduced rate per BellSouth OA Access Service call in exchange for their commitment to deliver specified minimum usage for all OA Access calls sent to the Company during a specified payment plan period. A BellSouth OA Access Service payment plan agreement is required to implement this option. (N)
2. BellSouth OA Access Service Savings Plan subscriber rates are as detailed for each plan option in 13. following. (N)
3. Application of BellSouth OA Access Service Savings Plan rates will commence with the first bill period following the plan option effective date, as agreed to, by and between the customer and the Company. (N)
4. The minimum payment plan period of a BellSouth OA Access Service Savings Plan is twenty-four (24) months and the maximum payment plan period is forty-eight (48) months. (N)
5. Except as indicated in 8., 9., 10. and 11. following, the customer must during the selected payment plan period(s) deliver BellSouth OA Access Service call usage greater than or equal to ninety-five percent (95%) of the minimum OA Access Service call usage required by the payment plan option(s) selected by the customer. (N)
6. At the end of the selected payment plan period(s), if BellSouth OA Access Service per call usage is below ninety-five percent (95%) of the minimum OA Access Service call usage required by the customer's selected plan option(s), the customer will be billed back the difference between the billed plan rate and the standard rate for all calls billed during the payment plan period. (N)
7. At any time during the active option payment plan period an existing BellSouth OA Access Service Savings Plan customer may request an upgrade to a service option having a higher usage commitment and/or a longer payment plan period. A new BellSouth OA Access Service payment plan agreement is required to implement the change. (N)
8. An existing BellSouth OA Access Service Savings Plan customer may request termination of their plan participation. If participation in the customer's currently active plan is ended prior to the scheduled expiration of the payment plan period, back billing of the difference between the then active plan option rates and the standard rates will be applied to a percentage of the calls that have been billed since the initiation of the plan options as follows: (N)

When Plan Option Is Terminated Prior to its Scheduled Expiration and Within __ Months of its Initiation Date	This is the Percentage of Calls to which Back Billing Applies
12 Months	100%
24 Months	90%
36 Months	75%
48 Months	45%

Example: A BellSouth OA Access Service Savings Plan customer who terminates their plan option after 12 months but before 24 months would be billed back on ninety percent (90%) of the calls billed under the plan. (N)

9. A customer who terminates their BellSouth OA Access Service Savings Plan is eligible to initiate a new plan six (6) months from the termination date. (N)
10. In the event of a merger or acquisition where some or all parties to the merger or acquisition have existing BellSouth OA Access Service Savings Plan options in place, each existing customer may continue their plan option to conclusion provided usage for each existing customer can be segregated from the whole and measured by the Company. Alternatively, the existing BellSouth OA Access Service Savings Plan options of each party to the merger or acquisition may be terminated without penalty provided a new BellSouth OA Access Service Savings Plan option is made effective for the merged or acquiring entity in which the usage commitment is greater than or equal to the sum of the usage commitments for each active plan option of each party to the merger or acquisition. (N)
11. In the absence of or upon the expiration of an active BellSouth OA Access Service Plan option(s), the standard rates detailed in E18.3.5 apply. (N)

All BellSouth marks contained herein and as set forth in the trademarks and servicemarks section of this Tariff are owned by BellSouth Intellectual Property Corporation.

E18. BELLSOUTH OPERATOR SERVICES ACCESS SERVICE

E18.3 BellSouth Operator Assistance Access Service (Cont'd) (N)

E18.3.4 Rate Regulations and Payment Arrangements (Cont'd) (N)

E. BellSouth OA Access Service Savings Plan (Cont'd) (N)

12. Following are the rate schedules for the BellSouth OA Access Service Savings Plan options. When electing to participate in the BellSouth OA Access Service Savings Plan, the customer must choose both an automated and a live operator plan option (one option from each of the tables following) and must specify a payment plan period for each of the two options selected. (N)

For Automated Calls: (N)

Automated Call Plan Option	Call Usage Commitment [1]	Payment Plan Period	Rate Per Call	
Option A	1 - 2,999,999	24 months	$ 0.1675	(N)
	1 - 4,499,999	36 months	$ 0.1650	(N)
	1 - 5,999,999	48 months	$ 0.1600	(N)
Option B	3,000,000 - 11,999,999	24 months	$ 0.1575	(N)
	4,500,000 - 17,999,999	36 months	$ 0.1550	(N)
	6,000,000 - 23,999,999	48 months	$ 0.1500	(N)
Option C	12,000,000 - 47,999,999	24 months	$ 0.1475	(N)
	18,000,000 - 71,999,999	36 months	$ 0.1450	(N)
	24,000,000 - 95,999,999	48 months	$ 0.1400	(N)
Option D	48,000,000 - 99,999,999	24 months	$ 0.1375	(N)
	72,000,000 - 149,999,999	36 months	$ 0.1350	(N)
	96,000,000 - 199,999,999	48 months	$ 0.1300	(N)
Option E	100,000,000 or Greater	24 months	$ 0.1275	(N)
	150,000,000 or Greater	36 months	$ 0.1250	(N)
	200,000,000 or Greater	48 months	$ 0.1200	(N)

For Calls Handled by a Live Operator: (N)

Live Operator Call Plan Option	Call Usage Commitment [1]	Payment Plan Period	Rate Per Call	
Option A	1 - 2,999,999	24 months	$ 0.3375	(N)
	1 - 4,499,999	36 months	$ 0.3350	(N)
	1 - 5,999,999	48 months	$ 0.3300	(N)
Option B	3,000,000 - 11,999,999	24 months	$ 0.3275	(N)
	4,500,000 - 17,999,999	36 months	$ 0.3250	(N)
	6,000,000 - 23,999,999	48 months	$ 0.3200	(N)
Option C	12,000,000 or Greater	24 months	$ 0.3175	(N)
	18,000,000 or Greater	36 months	$ 0.3150	(N)
	24,000,000 or Greater	48 months	$ 0.3100	(N)

Note 1: Commitment is for the total of Interstate and Intrastate Usage (N)

All BellSouth marks contained herein and as set forth in the trademarks and servicemarks section of this Tariff are owned by BellSouth Intellectual Property Corporation.

E18. BELLSOUTH OPERATOR SERVICES ACCESS SERVICE

E18.3 BellSouth Operator Assistance Access Service (Cont'd) (N)

E18.3.5 Rates and Charges (N)

A. The following rates apply for BellSouth Operator Assistance Access Service (N)

1. Professional Operator Assistance Services (N)

	Rate	Nonrecurring Charge	USOC	
(a) Per Automated Call Assisted	**$ 0.18**	**$ -**	**NA**	(N)
(b) Per Live Operator Call Assisted	**0.35**	**-**	**NA**	(N)

2. Call Branding (N)

(a) Per Branding Announcement Created or Changed	**-**	**7,000.00**	**WOABA**	(N)
(b) Per Platform Shelf Loaded	**-**	**270.00**	**WOABP**	(N)

3. Transport of Customer Calls (N)

	Monthly Rate	Nonrecurring Charges First Trunk Installed	Nonrecurring Charges Each Add'l Trunk	USOC	
(a) Per BellSouth OA Trunk	**$ 6.00**	**$ 24.00**	**$ 20.00**	**WOATX**	(N)

All BellSouth marks contained herein and as set forth in the trademarks and servicemarks section of this Tariff are owned by BellSouth Intellectual Property Corporation.

OFFICIAL APPROVED VERSION, RELEASED BY BSTHQ

E19. RESERVED FOR FUTURE USE (N)

CONTENTS (N)

E19. RESERVED FOR FUTURE USE (N)

E20. (DELETED) (D)

CONTENTS

All BellSouth marks contained herein and as set forth in the trademarks and servicemarks section of this Tariff are owned by BellSouth Intellectual Property Corporation.

E20. (DELETED) (D)

All BellSouth marks contained herein and as set forth in the trademarks and servicemarks section of this Tariff are owned by BellSouth Intellectual Property Corporation.

E20. (DELETED) (D)

All BellSouth marks contained herein and as set forth in the trademarks and servicemarks section of this Tariff are owned by BellSouth Intellectual Property Corporation.

E20. (DELETED) (D)

All BellSouth marks contained herein and as set forth in the trademarks and servicemarks section of this Tariff are owned by BellSouth Intellectual Property Corporation.

E20. (DELETED) (D)

All BellSouth marks contained herein and as set forth in the trademarks and servicemarks section of this Tariff are owned by BellSouth Intellectual Property Corporation.

E20. (DELETED) (D)

All BellSouth marks contained herein and as set forth in the trademarks and servicemarks section of this Tariff are owned by BellSouth Intellectual Property Corporation.

E20. (DELETED) (D)

All BellSouth marks contained herein and as set forth in the trademarks and servicemarks section of this Tariff are owned by BellSouth Intellectual Property Corporation.

E20. (DELETED) (D)

All BellSouth marks contained herein and as set forth in the trademarks and servicemarks section of this Tariff are owned by BellSouth Intellectual Property Corporation.

E20. (DELETED) (D)

All BellSouth marks contained herein and as set forth in the trademarks and servicemarks section of this Tariff are owned by BellSouth Intellectual Property Corporation.

E20. (DELETED) (D)

All BellSouth marks contained herein and as set forth in the trademarks and servicemarks section of this Tariff are owned by BellSouth Intellectual Property Corporation.

E20. (DELETED) (D)

All BellSouth marks contained herein and as set forth in the trademarks and servicemarks section of this Tariff are owned by BellSouth Intellectual Property Corporation.

E20. (DELETED) (D)

All BellSouth marks contained herein and as set forth in the trademarks and servicemarks section of this Tariff are owned by BellSouth Intellectual Property Corporation.

E20. (DELETED) (D)

All BellSouth marks contained herein and as set forth in the trademarks and servicemarks section of this Tariff are owned by BellSouth Intellectual Property Corporation.

E20. (DELETED) (D)

All BellSouth marks contained herein and as set forth in the trademarks and servicemarks section of this Tariff are owned by BellSouth Intellectual Property Corporation.

E20. (DELETED) (D)

All BellSouth marks contained herein and as set forth in the trademarks and servicemarks section of this Tariff are owned by BellSouth Intellectual Property Corporation.

E20. (DELETED) (D)

All BellSouth marks contained herein and as set forth in the trademarks and servicemarks section of this Tariff are owned by BellSouth Intellectual Property Corporation.

E20. (DELETED) (D)

All BellSouth marks contained herein and as set forth in the trademarks and servicemarks section of this Tariff are owned by BellSouth Intellectual Property Corporation.

E20. (DELETED) (D)

All BellSouth marks contained herein and as set forth in the trademarks and servicemarks section of this Tariff are owned by BellSouth Intellectual Property Corporation.

E20. (DELETED) (D)

All BellSouth marks contained herein and as set forth in the trademarks and servicemarks section of this Tariff are owned by BellSouth Intellectual Property Corporation.

E20. (DELETED) (D)

All BellSouth marks contained herein and as set forth in the trademarks and servicemarks section of this Tariff are owned by BellSouth Intellectual Property Corporation.

E20. (DELETED) (D)

All BellSouth marks contained herein and as set forth in the trademarks and servicemarks section of this Tariff are owned by BellSouth Intellectual Property Corporation.

E20. (DELETED) (D)

All BellSouth marks contained herein and as set forth in the trademarks and servicemarks section of this Tariff are owned by BellSouth Intellectual Property Corporation.

E20. (DELETED) (D)

All BellSouth marks contained herein and as set forth in the trademarks and servicemarks section of this Tariff are owned by BellSouth Intellectual Property Corporation.

E20. (DELETED) (D)

All BellSouth marks contained herein and as set forth in the trademarks and servicemarks section of this Tariff are owned by BellSouth Intellectual Property Corporation.

E20. (DELETED) (D)

All BellSouth marks contained herein and as set forth in the trademarks and servicemarks section of this Tariff are owned by BellSouth Intellectual Property Corporation.

E20. (DELETED) (D)

All BellSouth marks contained herein and as set forth in the trademarks and servicemarks section of this Tariff are owned by BellSouth Intellectual Property Corporation.

E20. (DELETED) (D)

All BellSouth marks contained herein and as set forth in the trademarks and servicemarks section of this Tariff are owned by BellSouth Intellectual Property Corporation.

E20. (DELETED) (D)

All BellSouth marks contained herein and as set forth in the trademarks and servicemarks section of this Tariff are owned by BellSouth Intellectual Property Corporation.

E20. (DELETED) (D)

All BellSouth marks contained herein and as set forth in the trademarks and servicemarks section of this Tariff are owned by BellSouth Intellectual Property Corporation.

E21. FAST PACKET ACCESS SERVICE

CONTENTS

E21.1 Exchange Access Frame Relay Service (XAFRS) (a.k.a. BellSouth Exchange Access Frame Relay Service) 1
E21.1.1 Service Description 1
E21.1.2 Rate Categories 2
E21.1.3 Acceptance Testing 3
E21.1.4 Ordering Options and Conditions 3
E21.1.5 Rate Regulations 3
E21.1.6 Rates and Charges ***4.4*** (T)
E21.2 (DELETED) ***6*** (T)
E21.3 BellSouth Exchange Access Asynchronous Transfer Mode Service (XAATMS) 10
E21.3.1 Service Description 10
E21.3.2 Rate Categories 12
E21.3.3 Acceptance Testing 14
E21.3.4 Ordering Options and Conditions 14
E21.3.5 Rate Regulations 14
E21.3.6 Rates and Charges 15
E21.4 Reserved For Future Use 16
E21.5 Reserved For Future Use 16
E21.6 BellSouth Network Visibility Service 16
E21.6.1 General 16
E21.6.2 Rate Regulations 18
E21.6.3 Rate Categories 19
E21.6.4 Rates and Charges 20

All BellSouth marks contained herein and as set forth in the trademarks and servicemarks section of this Tariff are owned by BellSouth Intellectual Property Corporation.

E21. FAST PACKET ACCESS SERVICE

E21.1 Exchange Access Frame Relay Service (XAFRS) (a.k.a. BellSouth Exchange Access Frame Relay Service)

E21.1.1 Service Description

A. Exchange Access Frame Relay Service (XAFRS) (a.k.a. BellSouth Exchange Access Frame Relay service) is a connection oriented packet-switched data service allowing for the interconnection of local area networks (LANS) or other compatible customer equipment. This service provides efficient throughput at various transmission speeds.

XAFRS (a.k.a. BellSouth Exchange Access Frame Relay service) allows for the transfer of variable length frames (packets). Frames are relayed by virtual connections; frames travel a fixed path through the network although bandwidth is not dedicated to each virtual connection.

This service uses Permanent Virtual Circuit (PVCs). A PVC is a logical channel from one XAFRS (a.k.a. BellSouth Exchange Access Frame Relay service) network interface to another XAFRS (a.k.a. BellSouth Exchange Access Frame Relay service) network interface. PVCs are end-to-end, bi-directional channels that are established ***either by the Company*** via the service provisioning process ***or by the customer using optional Customer Configuration Management Capability described in E21.1.2.A.2.c. following.*** (C)

The XAFRS (a.k.a. BellSouth Exchange Access Frame Relay service) standard specifies an address field called the Data Link Connection Identifier (DLCI). The DLCI specifies a connection. A Standard PVC is created via the mapping of two Standard DLCIs; on an optional basis, features are available to allow the creation of Priority PVCs.

XAFRS (a.k.a. BellSouth Exchange Access Frame Relay service) is comprised of a network interface component plus optional features. Connection to XAFRS (a.k.a. BellSouth Exchange Access Frame Relay service) network interfaces may be accomplished through dedicated access. For intrastate dedicated access, rates, charges, and regulations for Special Access Service are specified in Section E7. ***of this Tariff***. Only non-channelized bandwidth may terminate on an XAFRS (a.k.a. BellSouth Exchange Access Frame Relay service) network interface. (T)

There are two network interfaces available - a User Network Interface (UNI) and a Network-to-Network Interface (NNI).

The User Network Interface (UNI) is a standard interface used to connect the customer to the XAFRS (a.k.a. BellSouth Exchange Access Frame Relay service) network. It receives the data frame from the customer's network or device and verifies that the DLCI is valid before relaying the frame to the destination. The UNI is offered at transmission speeds of 56 Kbps, 64 Kbps, 1.536 Mbps, and 44.210 Mbps.

The Network-to-Network Interface (NNI) specifies how an XAFRS (a.k.a. BellSouth Exchange Access Frame Relay service) switch sends and receives data from another provider's Frame Relay switch. The NNI is offered at transmission speeds of 56 Kbps, 64 Kbps, 1.536 Mbps and 44.210 Mbps.

B. Technical Specifications

The provision of Exchange Access Frame Relay Service (XAFRS) (a.k.a. BellSouth Exchange Access Frame Relay service) requires the applicable network interface component. In addition, the customers may add optional features. Each of the components of the service are described in this Section.

All services installed after the effective date of this Tariff will conform to the transmission specification standards in the following references:

UNI Specifications for XAFRS (a.k.a. BellSouth Exchange Access Frame Relay service) are:

ANSI T1.617-1991, "Integrated Services Digital Network (ISDN) - Digital Subscriber Signaling System No. 1 (DSS1) - Signaling Specification for Frame Relay Service", American National Standards Institute, and ANSI T1.618-1991, "Integrated Services Digital Network (ISDN) - Core Aspects of Frame Relay Bearer Service", American National Standards Institute. This document is available from the American National Standards Institute, 11 West 42nd Street, New York, N.Y. 10036.

Document No. 001-208966, "Frame Relay Specification with Extension Based on Proposed T1S1 Standards", Digital equipment Corporation, Northern Telecom, Inc., and StrataCom, Inc. This document is available from the Frame Relay Forum, 39355 California Street, Suite 307, Fremont, CA 94538.

All UNI access facilities must be in conformance with ANSI standards T1.617-1991, T1.618-1991. These documents are available from the American National Standards Institute, 11 West 42nd Street, New York, New York 10036. (T)

NNI Specifications for XAFRS (a.k.a. BellSouth Exchange Access Frame Relay service) are:

Frame Relay Forum Document FRF.2, Frame Relay Network-to-Network Phase 1 Implementation Agreement. This document is available from the Frame Relay Forum, 39355 California Street, Suite 307, Fremont, CA 94538.

All BellSouth marks contained herein and as set forth in the trademarks and servicemarks section of this Tariff are owned by BellSouth Intellectual Property Corporation.

E21. FAST PACKET ACCESS SERVICE

E21.1 Exchange Access Frame Relay Service (XAFRS) (a.k.a. BellSouth Exchange Access Frame Relay Service) (Cont'd)

E21.1.1 Service Description (Cont'd)

B. Technical Specifications (Cont'd)

All NNI access facilities must be in conformance with ANSI standards and Telcordia Technical Reference TS-TSV-001370. This document is available from Telcordia Technologies, Direct Sales, 8 Corporate Place, PYA 3A-184, Piscataway, N.J. 08854

Performance specifications ***and service details*** for XAFRS (a.k.a. BellSouth Exchange Access Frame Relay service) are ***provided in***: (T)

BellSouth Technical Reference 73587, Frame Relay Service Interface and Performance Specifications. This document is available from BellSouth Telecommunications, Inc., Regional Documentation Coordinator, 20th Floor, 600 North 19th Street , Birmingham AL 35203.

C. Interface Specifications

The following specifications are available with this service:
Digital Packet (UNI)
Digital Packet (NNI)

E21.1.2 Rate Categories

A. The following rate categories apply to XAFRS (a.k.a. BellSouth Exchange Access Frame Relay service):

1. Network Interface

   This rate category provides for the customer's termination on the Fast Packet switch. The Network Interface rate category includes the packet switching function.

2. Optional Features

   The Optional Features rate category provides for optional features which may be added to XAFRS (a.k.a. BellSouth Exchange Access Frame Relay service) to improve its quality or utility to meet specific communications requirements.

   a. DLCIs per UNI or NNI

   This feature provides for the assignment of Data Link Channel Identifiers (DLCIs) per UNI or NNI. One DLCI is required per UNI or NNI. When any two DLCIs are mapped together, a PVC can be created.

   One Initial DLCI is applicable when DLCIs are ordered at the same time as the installation of a UNI or NNI. Only one "Initial" DLCI (either one Initial Standard DLCI or one Initial Priority DLCI) is allowed per UNI or NNI. Additional DLCIs (beyond this initial DLCI) ordered with the installation of the UNI or NNI and any DLCIs ordered subsequent to the installation of the UNI or NNI are considered Additional DLCIs. A DLCI which is not a Priority DLCI, as discussed following, is referred to as a Standard DLCI.

   Priority PVC capability allows a customer to differentiate specific PVCs with regard to the importance of the data within those PVCs as compared to other PVCs. In the case of contention or network congestion, the network will give precedence to the frames of a Priority PVC over frames of a Standard PVC. XAFRS (a.k.a. BellSouth Exchange Access Frame Relay service) allows the creation of Priority PVCs. Such a Priority PVC is formed by the mapping of two Priority DLCIs (as set forth in E21.1.6.B.1***. following***); these Priority DLCIs must have an associated CIR value of greater than zero. A request to convert an existing Standard PVC to a Priority PVC (or vice versa) shall be considered as a request to disconnect the existing DLCIs and as a request to connect the new DLCIs. (T)

   Individual DLCI charges are not applicable to the standard configurable DLCIs provided within a Configurable DLCI Bundle associated with optional Customer Configuration Management Capability described in E21.1.2.A.2.c. following. Configurable DLCIs are considered as additional standard DLCIs. (N)

   b. Committed Information Rate (CIR)

   Committed Information Rate is a feature that enables the customer to select a sustained throughput under normal conditions. A CIR must be selected for each DLCI. A CIR selected with a value greater than zero has a separate charge from any DLCI charges. The CIR value selected cannot exceed the minimum transmission speed of the ***XAFRS Network Interface at*** either end of the PVC. ***(The Frame Relay network's burst capability and discard eligible feature are described in TR 73587.)*** (C)

   The CIR value of Priority DLCIs must be greater than zero.

All BellSouth marks contained herein and as set forth in the trademarks and servicemarks section of this Tariff are owned by BellSouth Intellectual Property Corporation.

E21. FAST PACKET ACCESS SERVICE

E21.1 Exchange Access Frame Relay Service (XAFRS) (a.k.a. BellSouth Exchange Access Frame Relay Service) (Cont'd)

E21.1.2 Rate Categories (Cont'd)

A. The following rate categories apply to XAFRS (a.k.a. BellSouth Exchange Access Frame Relay service): (Cont'd)

2. Optional Features (Cont'd)

c. Customer Configuration Management Capability (N)

Configuration Management Capability is optionally available for an XAFRS customer to have the ability to add, change and delete PVCs for their XAFRS Network Interface themselves, without utilizing the standard ordering/provisioning process to request the Company to perform these functions. PVCs created thru the standard ordering/provisioning process by the Company are standard non-configurable PVCs and cannot be modified by the customer as described herein thru Customer Configuration Management Capability; the customer is billed the preceding DLCI and CIR rates and charges for standard non-configurable PVCs. PVCs created thru Customer Configuration Management Capability are referred to as configurable PVCs and may be created and modified by the customer as described herein; the customer is billed the charges described following for such configurable PVCs. A customer may choose to utilize one or both of these methods for establishing PVCs on a given XAFRS Network Interface. (N)

Customer Configuration Management Capability is available only for XAFRS Network Interfaces equipped with Network Visibility Service (NVS) and is available only for the customer to add, modify or delete configurable PVCs formed between similarly equipped Frame Relay service with NVS and Customer Configuration Management Capability. (N)

Customer Configuration Management Capability is established via the standard ordering/provisioning process on a per XAFRS Network Interface basis when a minimum of one Configurable DLCI Bundle is ordered. (N)

DLCIs in a Configurable DLCI Bundle will be referred to as configurable DLCIs. Two configurable DLCIs mapped thru Customer Configuration Management Capability form a configurable PVC. (N)

To utilize Customer Configuration Management Capability, each XAFRS Network Interface must have a minimum of one Configurable DLCI Bundle ordered by the customer. More than one Configurable DLCI Bundle may be ordered for a specific XAFRS Network Interface to establish the block, or total quantity, of configurable DLCIs available for that XAFRS Network Interface. The block of configurable DLCIs established are only for the use of that single XAFRS Network Interface may not be "shared" with other XAFRS Network Interfaces. (N)

A monthly rate applies for each Configurable DLCI Bundle ordered and the rate varies based upon the quantity of configurable DLCIs included in each bundle. Each Configurable DLCI Bundle provides a specific quantity of standard configurable DLCIs, each with a maximum CIR of up to 64 Kbps per configurable DLCI. Customers will order the quantity and size bundles that will provide the total quantity or block of configurable DLCIs needed for an XAFRS Network Interface. The configurable DLCI block quantity is then the customer-established limit of the number of configurable DLCIs which the customer may manage on a specific XAFRS Network Interface. The block of configurable DLCIs selected for an XAFRS Network Interface may be increased or decreased as the customer's needs change. The Configurable DLCI Block Establishment/Change Charge is the nonrecurring charge applicable for initially ordering and provisioning the Configurable DLCI Bundle(s) to establish the configurable DLCI block and for making a subsequent request to change the block size (i.e., add or delete bundles). (N)

The Configurable DLCI Block Establishment/Change Charge is a nonrecurring charge applicable to initially establish the block of configurable DLCIs for an XAFRS Network Interface. This charge is also applicable per subsequent request to change the size of the configurable DLCI block. Only one such nonrecurring charge applies per request regardless of how many Configurable DLCI Bundles are requested to initially establish the block or are requested subsequently to be added or deleted. (N)

With Customer Configuration Management Capability the customer will have the capability to add, change and/or delete configurable PVCs formed by the mapping of two configurable DLCIs. A PVC cannot be established between a configurable DLCI and a non-configurable DLCI thru either Customer Configuration Management Capability or thru the standard ordering/provisioning process. Customer Configuration Management Capability cannot be utilized to make changes to a non-configurable PVC, and the standard ordering/provisioning process cannot be utilized to create, modify or delete a configurable PVC. (N)

All BellSouth marks contained herein and as set forth in the trademarks and servicemarks section of this Tariff are owned by BellSouth Intellectual Property Corporation.

E21. FAST PACKET ACCESS SERVICE

E21.1 Exchange Access Frame Relay Service (XAFRS) (a.k.a. BellSouth Exchange Access Frame Relay Service) (Cont'd)

E21.1.2 Rate Categories (Cont'd)

A. The following rate categories apply to XAFRS (a.k.a. BellSouth Exchange Access Frame Relay service): (Cont'd)

2. Optional Features (Cont'd)

c. Customer Configuration Management Capability (Cont'd) (N)

As a current technical limitation Customer Configuration Management Capability cannot be utilized for Priority PVCs. Therefore, requests for such PVCs will have to be made thru the standard ordering/provisioning process for the Company to provision and will be subject to the preceding standard rates and charges for such features. (N)

Customer Configuration Management Capability may only be utilized to create configurable PVCs between two Frame Relay services equipped with NVS and Customer Configuration Management Capability within the same LATA. (N)

A customer may request that some or all of the standard DLCIs associated with an existing XAFRS Network Interface with Customer Configuration Management Capability be converted to Configurable DLCIs. Only standard DLCIs that are mapped to other Network Interfaces also equipped for Customer Configuration Management can be converted (subject to any limitations set forth herein on what types of PVCs are technically compatible with Customer Configuration Management Capability). The DLCI Conversion Charge is the nonrecurring charge applicable per standard DLCI requested to be converted to a configurable DLCI. Once converted to a configurable DLCI, that DLCI will be counted against the XAFRS Network Interface configurable DLCI block quantity; monthly rates for the standard DLCI and associated CIR will concurrently no longer apply. (N)

A customer may request that some or all of the configurable DLCIs associated with an existing XAFRS Network Interface with Customer Configuration Management Capability be converted to standard DLCIs which the customer will no longer manage. Such requests will convert the configurable DLCI "as is" to a standard DLCI (i.e., standard additional DLCI with same CIR value). The DLCI Conversion Charge is the nonrecurring charge applicable per configurable DLCI requested to be converted to a standard DLCI. Once converted to a standard DLCI, that DLCI (and associated CIR) will begin billing the standard DLCI and CIR monthly rates and will concurrently no longer count against the configurable DLCI block quantity for that XAFRS Network Interface. (N)

After the customer has established Customer Configuration Management Capability (by ordering Configurable DLCI Bundles to establish the configurable DLCI block for each XAFRS Network Interface) for their network, the customer will have access thru the NVS system to mechanically add, change and delete configurable PVCs between these XAFRS Network Interfaces. (N)

A Customer Configuration Management service request is made thru NVS for a specific PVC activity (e.g., add configurable PVC, change CIR or endpoint on an existing configurable PVC, delete configurable PVC, etc.) involving Frame Relay services equipped with NVS and Customer Configuration Management Capability. Each Customer Configuration Management service request will be assigned a service request number to facilitate customer questions and to enable status and tracking. (N)

A Customer Configuration Management service request will be provisioned within minutes; however a Cancellation Window of two hours is allowed after successful provisioning during which time the customer may submit a request thru NVS to cancel or "undo" the request before the change becomes permanent. The customer may specifically request to forgo (close) the Cancellation Window during which a particular service request may be cancelled and commit that NVS make the service request provisioning become permanent immediately. When the Cancellation Window expires without the customer canceling the service request or the customer foregoes/closes the Cancellation Window, the provisioned service request is made permanent and considered a completed transaction. (N)

Customer Configuration Management Capability effectively provides the customer near real-time processing capability to allow them to manage the provisioning and change activities for configurable PVCs within their network. However, access to Customer Configuration Management Capability is not guaranteed for customer access and use twenty-four hours a day/seven days a week. Customer access may be periodically preempted for higher priority Company network management and maintenance activities. Customer inability to access the NVS/Customer Configuration Management systems during these periods will not be considered a service outage. (N)

All BellSouth marks contained herein and as set forth in the trademarks and servicemarks section of this Tariff are owned by BellSouth Intellectual Property Corporation.

E21. FAST PACKET ACCESS SERVICE

E21.1 Exchange Access Frame Relay Service (XAFRS) (a.k.a. BellSouth Exchange Access Frame Relay Service) *(*Cont'd)

E21.1.2 Rate Categories (Cont'd)

A. The following rate categories apply to XAFRS (a.k.a. BellSouth Exchange Access Frame Relay service): (Cont'd)

3. Feature Change Charge (M)

In addition to any specific Optional Feature charges, a Feature Change Charge applies whenever a change is made (at the customer's request) to a single optional feature within a single network configuration on a single switch. Although multiple changes may be caused by such actions, only one Feature Change Charge will apply. (M)

4. Transfer of Service (M)

When a change to the customer of record is requested, transfer of service charges, as set forth in E21.1.6.C. following will apply. Charges are applied on a Billing Account Number (BAN). (M)

Administrative changes, as identified following, will be made without charge(s) to the customer. Such changes require the continued provision and billing of the Access Service to the same entity. (i.e., customer remains responsible for all outstanding indebtedness for Access Service). Administrative changes are as follows:

a. Change of customer name (i.e., the customer of record does not change but rather the customer of record changes its name -- e.g., AT&T-Long Lines to AT&T-Long Lines to AT&T-Communications),

b. Change of customer or customer's end user premises address when the change of address is not a result of physical relocation of equipment,

c. Change in billing data (name, address, or contract name or telephone number. The customer of record does not change),

d. Change of customer circuit identification,

e. Change of billing account number,

f. Change of customer test line number,

g. Change of customer or customer's end user contact name of telephone number, and

h. Change of jurisdiction.

All other service arrangements, including physical changes to existing services, will be charged as follows:

If the change involves the addition of an optional feature which has a separate nonrecurring charge, that nonrecurring charge will apply.

E21.1.3 Acceptance Testing

At no additional charge, and at the customer's request, the Company will cooperatively test at the time of installation.

E21.1.4 Ordering Options and Conditions

The Access Order, as set forth in Section E5. preceding, is used in the provisioning of Exchange Access Frame Relay Service (XAFRS) (a.k.a. BellSouth Exchange Access Frame Relay service). Also included in that section are other charges which may be associated with ordering XAFRS (e.g., Service Date Change Charges, Cancellation Charges, etc.).

E21.1.5 Rate Regulations

A. Rates and charges are specified in E21.1.6 following for Exchange Access Frame Relay Service (XAFRS) (a.k.a. BellSouth Exchange Access Frame Relay service). XAFRS (a.k.a. BellSouth Exchange Access Frame Relay service***)*** is available under the Fast Packet Services Payment Plan (SPP) as specified in E2.4.9.B ***of this Tariff***. (T)

B. Minimum Period of Service

The minimum period is one month.

C. Installation of Service

Nonrecurring charges apply to each UNI or NNI on each XAFRS (a.k.a. BellSouth Exchange Access Frame Relay service) installed.

Nonrecurring charges for the Network Interface elements are set forth in E21.1.6.A. following.

D. Installation of Optional Features

Nonrecurring charges apply to the installation of optional features as set forth in E21.1.6.B. following.

E21. FAST PACKET ACCESS SERVICE

E21.1 Exchange Access Frame Relay Service (XAFRS) (a.k.a. BellSouth Exchange Access Frame Relay Service) (Cont'd)

E21.1.5 Rate Regulations (Cont'd)

E. Service Rearrangements

Service rearrangements are changes to existing (installed) services which do not result in a change in the minimum period requirements as set forth in B. preceding. Changes which result in the establishment of new minimum period obligations are treated as disconnects and starts. A change which results from a transfer of service is described and charged as set forth in F. and E21.1.6.C. following.

F. Transfer of Service

When a change in billing data (e.g., name, address, contract name, or telephone number) is requested in association with a change in the customer's record, transfer of service charges, as set forth in E21.1.6.C. following will apply. Charges are applied on a Billing Account Number (BAN).

G. Maintenance

In order to maintain the quality of XAFRS (a.k.a. BellSouth Exchange Access Frame Relay service), the Company reserves the right to perform preventive maintenance and software updates to the network. This could result in XAFRS (a.k.a. BellSouth Exchange Access Frame Relay service) being unavailable during the time period between 2:00 A.M. and 4:00 A.M. Eastern Time on any given Saturday[1] or Sunday morning. However, the Company only expects to utilize this maintenance window for any given switch on the average of once a quarter. In addition, the Company will make every reasonable effort to provide advance notice to those customers likely to be affected by such maintenance work. This maintenance window may be adjusted by the Company upon written notice to the customer. (T)

(M)

Note *1*: Effective March 4, 2001, the two days that preventive maintenance may be performed is changing from Wednesday and Sunday to Saturday and Sunday. (T)

Material previously appearing on this page now appears on page(s) 4.4 of this section.

All BellSouth marks contained herein and as set forth in the trademarks and servicemarks section of this Tariff are owned by BellSouth Intellectual Property Corporation.

E21. FAST PACKET ACCESS SERVICE

E21.1 Exchange Access Frame Relay Service (XAFRS) (a.k.a. BellSouth Exchange Access Frame Relay Service) (Cont'd)

E21.1.5 Rate Regulations (Cont'd)

H. Service Level Agreements (N)

Service Level Agreements (SLAs) provide the Company's service level commitments for specific aspects of its Frame Relay network's performance. SLAs are only provided for customers with at least ten Frame Relay UNIs and or NNIs. Such customers must also subscribe to Network Visibility Service (specifically NVS Fault Management, On Demand Statistics and Performance Reports) which is the primary monitoring and reporting tool used for determining performance results and missed commitments. (N)

SLA commitments only apply for service wholly within Company territory; SLA commitments will not apply for service which is part of a jointly provided service. (N)

1. SLA commitments are provided for Network Availability, Network Transit Delay and Frame Delivery Rate. (N)
2. SLA credits are provided for missed commitments, except as specified otherwise in 3. and 4. following. An SLA report is provided through the NVS system that provides details of missed commitments upon which credits will be issued; the SLA report is available on a calendar month basis. Credits are automatically issued based upon the end-of-month SLA report; such credits shall only be issued once a month. The Company's calculation of its performance through the NVS system shall be the sole determinate of the Company's obligation to provide a credit for a missed performance commitment as set forth in this tariff. (N)
3. SLA credits for missed commitments do not apply when any commitment is not met because the Company does not have control over the circumstances causing the commitment to be missed. Situations over which the Company does not have control can be defined as, but not limited to the following: (N)
   a. any act, any omission or negligence on the part of the customer, any other customer or any third party, or of any other entity providing a portion of the service, (N)
   b. labor difficulties, governmental orders, civil commotions, acts of civil or military authority, embargoes, epidemics, declared National Emergencies, criminal actions against the Company, war, terrorist acts, riots, insurrections, fires, explosions, nuclear accidents, power blackouts, acts of God (including, but not limited to, earthquakes, floods or unusually severe weather conditions) or other circumstances beyond the Company's control, (N)
   c. the customer's premises equipment, (N)
   d. unavailability of the customer's facilities and/or equipment, and (N)
   e. customer oversubscription of the UNI/NNI beyond 200% (i.e., the sum of the total CIR of all PVCs carried by any UNI or NNI may not be greater than 200% of the UNI/NNI Network Interface speed). (N)
4. SLA credits for missed commitments do not apply for situations when the customer's service is out of operation as a result of scheduled maintenance windows as set forth in E21.1.5.G. preceding. Time from such maintenance activity does not count towards the time a service is considered as unavailable during a calendar month for purposes of measuring for the Network Availability SLA. (N)
5. SLA Commitments (N)

   SLA commitments for the specific aspects of the Frame Relay network's performance set forth in 1. preceding are measured on a specific calendar month basis. The specific network performance commitments provided and how their performance is measured through the NVS system for a calendar month are as follows: (N)

   Network Availability Commitment: 99.9% **(N)**

   The Network Availability commitment is provided on the customer's total Frame Relay network. Network Availability will measure the percentage of time during a calendar month that the customer's Frame Relay network is available. (N)

   Network availability will be measured through the NVS system for the customer's total Frame Relay network and for each individual Frame Relay UNI/NNI for a whole calendar month. (N)

   For the purpose of measuring Network Availability, times during which a Frame Relay UNI/NNI is out of operation in association with maintenance windows (as set forth in E21.1.5.G. preceding) and in association with situations over which the Company does not have control (as set forth in E21.1.5.H.3. preceding) are counted as "available" time. (N)

All BellSouth marks contained herein and as set forth in the trademarks and servicemarks section of this Tariff are owned by BellSouth Intellectual Property Corporation.

E21. FAST PACKET ACCESS SERVICE

E21.1 Exchange Access Frame Relay Service (XAFRS) (a.k.a. BellSouth Exchange Access Frame Relay Service) (Cont'd)

E21.1.5 Rate Regulations (Cont'd)

H. Service Level Agreements (Cont'd) (N)

5. SLA Commitments (Cont'd) (N)

SLA commitments for the specific aspects of the Frame Relay network's performance set forth in 1. preceding are measured on a specific calendar month basis. The specific network performance commitments provided and how their performance is measured through the NVS system for a calendar month are as follows: (Cont'd) (N)

Network Availability Commitment: 99.9% (Cont'd) (N)

Total Frame Relay Network - Network Availability: Network Availability for the customer's total network is calculated by subtracting the total unavailable time for all the Frame Relay UNI/NNIs in a specific total calendar month, from the total available time for all the Frame Relay UNI/NNIs in that specific total calendar month, and then dividing the difference by the total available time for all the Frame Relay UNI/NNIs in that specific total calendar month. If the resulting percentage is less than 99.9%, the commitment for Network Availability has been missed; the Network Availability SLA Credit will then be issued on any Frame Relay UNI/NNI whose specific individual Network Availability measurement is below 99.9%. (N)

Individual Frame Relay UNI/NNI – Network Availability: Network Availability for an individual Frame Relay UNI/NNI is calculated by first subtracting the unavailable time from the total available time for a specific calendar month, and then dividing it by the total available time for that specific calendar month. If the Network Availability SLA commitment was missed on the customer's total network and the resulting percentage for a specific individual Frame Relay UNI/NNI is less than 99.9%, the Network Availability SLA Credit set forth in E21.1.5.H.6. following will then be issued on that specific individual Frame Relay UNI/NNI. (N)

Network Transit Delay commitment: 60 milliseconds, one-way (N)

The Network Transit Delay commitment is provided for each individual PVC within the customer's Frame Relay network. (N)

Through the NVS System, Network Transit Delay will measure the average one-way transit time of a specific PVC's frames through the network within a specific calendar month. The transit time for each frame transmitted is measured from the originating Frame Relay UNI/NNI to the terminating Frame Relay UNI/NNI. The measurement for the Network Transit Delay commitment is the average transit time of a frame for a PVC, based upon all the frames transmitted for that PVC during that specific calendar month. (N)

The average monthly Network Transit Delay for a PVC will be determined by dividing the sum of the actual transit time of each frame sent via the PVC that month by the total frames transmitted in that specific calendar month. If the resulting average transit time per frame for that PVC is greater than 60 milliseconds (one-way), the commitment has been missed for that PVC and the Network Transit Delay SLA Credit set forth in E21.1.5.H.6. following will then be issued on this Frame Relay PVC. (N)

Frame Delivery Rate Commitment: 99.9% (N)

The Frame Delivery Rate commitment is provided for each Frame Relay PVC that has a CIR of greater than 32 Kbps. (N)

Through the NVS System, Frame Delivery Rate will measure the percentage of frames successfully delivered for a PVC. The Frame Delivery Rate measures the quantity of frames transmitted versus quantity of frames received during a specific calendar month between the two Frame Relay UNI/NNI's forming the PVC (i.e., the difference in frames transmitted versus received are considered "dropped"). (N)

The monthly Frame Delivery Rate for a qualifying PVC in a specific calendar month is determined by subtracting the total frames dropped from the total frames transmitted, divided by the total frames transmitted. If the resulting percentage representing the percent of frames delivered for that PVC is less than 99.9%, this commitment has been missed and the Frame Delivery Rate SLA Credit set forth in E21.1.5.H.6. following will then be issued on this Frame Relay PVC. (N)

All BellSouth marks contained herein and as set forth in the trademarks and servicemarks section of this Tariff are owned by BellSouth Intellectual Property Corporation.

E21. FAST PACKET ACCESS SERVICE

E21.1 Exchange Access Frame Relay Service (XAFRS) (a.k.a. BellSouth Exchange Access Frame Relay Service) (Cont'd)

E21.1.5 Rate Regulations (Cont'd)

H. Service Level Agreements (Cont'd) (N)

6. Credits for Missed SLA Commitments (N)

The following credits are provided for SLA performance commitments missed during a calendar month subject to the conditions outlined herein E21.1.5.H. (N)

Total SLA credits issued for an individual Frame Relay UNI/NNI in a specific calendar month cannot exceed the total monthly recurring charges billed for that Frame Relay UNI/NNI (i.e., cannot exceed the sum of the monthly billing for the XAFRS Network Interface rate element plus any rate elements for features). (N)

Network Availability SLA Credit: (N)

This credit is appropriate when the Network Availability commitment for the customer's total network is missed; this credit is then applied per individual Frame Relay UNI/NNI that does not specifically meet the Network Availability commitment. (N)

For each individual Frame Relay UNI/NNI not meeting this commitment for a specific calendar month, a credit equal to 1/30 of its monthly recurring charge for the XAFRS Network Interface rate element will be issued. (N)

Network Transit Delay SLA Credit: (N)

This credit is applied per individual Frame Relay PVC (i.e., a DLCI pair forming the PVC) that does not meet the Network Transit Delay commitment. (N)

For each PVC not meeting this commitment for a specific calendar month, a credit equal to $3.00 for the affected DLCI pair will be issued. (N)

Frame Delivery Rate SLA Credit: (N)

This credit is applied per individual Frame Relay PVC (i.e., a DLCI pair forming the PVC) that does not meet the Frame Delivery Rate commitment. (N)

For each PVC not meeting this commitment for a specific calendar month, credits for the affected DLCI pair will be issued as follows: (N)

. Recurring Charge Credit Per DLCI pair:	$ 3.00	(N)
. Recurring CIR Credit per DLCI pair:		(N)
0 Bps CIR	$ 0.00	(N)
> 0 - 32 Kbps CIR	6.30	(N)
> 32 - 56 Kbps CIR	10.80	(N)
> 56 - 64 Kbps CIR	11.70	(N)
> 64 - 128 Kbps CIR	16.20	(N)
> 128 - 256 Kbps CIR	21.60	(N)
> 256 - 384 Kbps CIR	25.20	(N)
> 384 - 512 Kbps CIR	28.80	(N)
> 512 - 768 Kbps CIR	32.40	(N)
> 768 Kbps - 1.536 Mbps CIR	41.25	(N)
> 1.536 - 4 Mbps CIR	130.00	(N)
> 4 - 10 Mbps CIR	325.00	(N)
> 10 - 16 Mbps CIR	525.00	(N)
> 16 - 34 Mbps CIR	1,100.00	(N)
> 34 - 44.210 Mbps CIR	1,500.00	(N)

All BellSouth marks contained herein and as set forth in the trademarks and servicemarks section of this Tariff are owned by BellSouth Intellectual Property Corporation.

E21. FAST PACKET ACCESS SERVICE

E21.1 Exchange Access Frame Relay Service (XAFRS) (a.k.a. BellSouth Exchange Access Frame Relay Service) (Cont'd)

E21.1.6 Rates and Charges (M)

A. Network Interface (M)

1. Per UNI (M)

		Nonrecurring Charge	Month To Month	A 12 to 24 Mos. Plan	B 25 to 48 Mos. Plan	USOC	
(a)	56 Kbps	**$300.00**	**$62.00**	**$49.00**	**$44.00**	**XAFU5**	(M)
(b)	64 Kbps	**300.00**	**70.00**	**56.00**	**50.00**	**XAFU6**	(M)
(c)	1.536 Mbps	**410.00**	**294.00**	**234.00**	**210.00**	**XAFU1**	(M)
(d)	44.210 Mbps	**1,050.00**	**2,426.00**	**1,920.00**	**1,715.00**	**XAFU4**	(M)

2. Per NNI (M)

(a)	56 Kbps	**300.00**	**62.00**	**49.00**	**44.00**	**XAFN5**	(M)
(b)	64 Kbps	**300.00**	**70.00**	**56.00**	**50.00**	**XAFN6**	(M)
(c)	1.536 Mbps	**410.00**	**294.00**	**234.00**	**210.00**	**XAFN1**	(M)
(d)	44.210 Mbps	**1,050.00**	**2,426.00**	**1,920.00**	**1,715.00**	**XAFN4**	(M)

B. Optional Features (M)

1. DLCI[1] (T)(M)

		Nonrecurring Charge	Monthly Rate	USOC	
(a)	Initial Standard DLCI[2]	**$-**	**$-**	**XAFD1**	(T)(M)
(b)	Additional Standard DLCI	**70.00**	**1.50**	**XAFD2**	(M)
(c)	Initial Priority DLCI[2,3]	**-**	**5.00**	**XAFP1**	(T)(M)
(d)	Additional Priority DLCI[3]	**70.00**	**5.00**	**XAFP2**	(T)(M)

Note 1: These DLCI charges are not applicable for configurable DLCIs provided as part of a Configurable DLCI Bundle associated with Customer Configuration Management Capability. (N)

Note *2*: One "Initial" DLCI is applicable when DLCIs are ordered at the same time as the installation of the Network Interface. Only one Initial DLCI (either one Initial Standard DLCI or one Initial Priority DLCI) is allowed per Network Interface. All other DLCIs are considered Additional DLCIs. (T)(M)

Note *3*: A Priority DLCI must have CIR with a value greater than 0. (T)(M)

All BellSouth marks contained herein and as set forth in the trademarks and servicemarks section of this Tariff are owned by BellSouth Intellectual Property Corporation.

E21. FAST PACKET ACCESS SERVICE

E21.1 Exchange Access Frame Relay Service (XAFRS) (a.k.a. BellSouth Exchange Access Frame Relay Service) (Cont'd)

E21.1.6 Rates and Charges (Cont'd)

B. Optional Features (Cont'd)

2. Committed Information Rate (CIR) (Per DLCI) cannot exceed the minimum transmission speed of the ***XAFRS Network Interface*** at either end of the PVC.[1] (T)

		Nonrecurring Charge	Monthly Rate	USOC
(a)	0 Bps	$-	$-	XAFCA
(b)	Over 0 thru 32 Kbps	-	6.30	XAFCB
(c)	Over 32 thru 56 Kbps	-	10.80	XAFCC
(d)	Over 56 thru 64 Kbps	-	11.70	XAFCD
(e)	Over 64 thru 128 Kbps	-	16.20	XAFCG
(f)	Over 128 thru 256 Kbps	-	21.60	XAFCH
(g)	Over 256 thru 384 Kbps	-	25.20	XAFCJ
(h)	Over 384 thru 512 Kbps	-	28.80	XAFCK
(i)	Over 512 thru 768 Kbps	-	32.40	XAFCL
(j)	Over 768 Kbps thru 1.536 Mbps	-	41.25	XAFCM
(k)	Over 1.536 thru 4 Mbps	-	130.00	XAFCP
(l)	Over 4 thru 110 Mbps	-	325.00	XAFCQ
(m)	Over 10 thru 16 Mbps	-	525.00	XAFCR
(n)	Over 16 thru 34 Mbps	-	1,100.00	XAFCT
(o)	Over 34 thru 44.210 Mbps	-	1,500.00	XAFCU

3. Customer Configuration Management Capability - Rate elements following for Customer Configuration Management Capability are applicable for DLCIs and CIR associated with configurable PVCs provisioned by the customer; these rates and charges apply in lieu of those preceding for DLCI and CIR rate elements applicable for standard PVCs provisioned by the Company. (N)

(a) Configurable DLCI Bundles - Each bundle provides the specified quantity of configurable DLCIs, with up to 64 Kbps CIR per DLCI. Multiple bundles may be selected to secure the total quantity, or block, of configurable DLCIs for an XAFRS Network Interface. (N)

	Monthly Rate	USOC	
- 2 DLCI Bundle	$ 16.50	XAFKA	(N)
- 5 DLCI Bundle	41.00	XAFKB	(N)
- 15 DLCI Bundle	121.00	XAFKC	(N)
- 25 DLCI Bundle	197.00	XAFKD	(N)
- 35 DLCI Bundle	270.00	XAFKE	(N)
- 50 DLCI Bundle	373.00	XAFKF	(N)
- 100 DLCI Bundle	664.00	XAFKG	(N)
- 200 DLCI Bundle	1,162.00	XAFKH	(N)
- 300 DLCI Bundle	1,494.00	XAFKJ	(N)
- 400 DLCI Bundle	1,660.00	XAFKK	(N)

(M)

Note 1: These CIR Charges are not applicable for configurable DLCIs provided within a Configurable DLCI Bundle (which include CIR of up to 64 Kbps per configurable DLCI) associated with Customer Configuration Management Capability. (N)

Material previously appearing on this page now appears on page(s) 6 of this section.

All BellSouth marks contained herein and as set forth in the trademarks and servicemarks section of this Tariff are owned by BellSouth Intellectual Property Corporation.

E21. FAST PACKET ACCESS SERVICE

E21.1 Exchange Access Frame Relay Service (XAFRS) (a.k.a. BellSouth Exchange Access Frame Relay Service) (Cont'd)

E21.1.6 Rates and Charges (Cont'd)

B. Optional Features (Cont'd)

3. Customer Configuration Management Capability - Rate elements following for Customer Configuration Management Capability are applicable for DLCIs and CIR associated with configurable PVCs provisioned by the customer; these rates and charges apply in lieu of those preceding for DLCI and CIR rate elements applicable for standard PVCs provisioned by the Company. (Cont'd) (N)

   (b) Configurable DLCI Block Establishment/Change Charge - This nonrecurring charge is applicable to initially establish the block of configurable DLCIs for an XAFRS Network Interface. This charge is also applicable per subsequent request to change the size of the block of configurable DLCIs. Only one such nonrecurring charge applies per request regardless of how many Configurable DLCI Bundles are requested to initially establish the block or are requested subsequently to be added or deleted. (N)

	Nonrecurring Charge	USOC	
- Per Request	**$ 45.00**	**XAFKY**	(N)

   (c) DLCI Conversion Charge – This nonrecurring charge is applicable per standard DLCI requested to be converted to a configurable DLCI and per configurable DLCI requested to be converted to a standard DLCI. (N)

- Per DLCI	**16.00**	**XAFKZ**	(N)

C. Service Modification (M)

1. Feature Change Charge (M)

(a) Per Occurrence, Per Feature	**25.00**	**XAFFC**	(M)

2. Transfer of Service (M)

(a) Per Billing Account Number	**65.00**	**XAFTF**	(M)

E21.2 (DELETED) (T)

Material appearing on this page previously appeared on page(s) 5 of this section.

All BellSouth marks contained herein and as set forth in the trademarks and servicemarks section of this Tariff are owned by BellSouth Intellectual Property Corporation.

E21. FAST PACKET ACCESS SERVICE

E21.2 (DELETED) *(*Cont'd) (D)

.

E21. FAST PACKET ACCESS SERVICE

E21.2 (DELETED) (Cont'd) (D)

E21. FAST PACKET ACCESS SERVICE

E21.2 (DELETED) (Cont'd) (D)

E21. FAST PACKET ACCESS SERVICE

E21.3 BellSouth Exchange Access Asynchronous Transfer Mode Service (XAATMS)

E21.3.1 Service Description

A. BellSouth Exchange Access Asynchronous Transfer Mode (ATM) Service (XAATMS) is a connection-oriented data service based on ATM cell-based switching technology. BellSouth XAATMS allows for the interconnection of ATM compatible customer equipment by providing efficient throughput at high speeds of transmission. BellSouth XAATMS provides the switching of symmetrical duplex transmissions of fixed-length ATM cells (herein referred to as ATM cells).

A user network interface (UNI) is available with BellSouth XAATMS. The UNI is a standard interface used to connect the customer to the BellSouth XAATMS switch. It receives the ATM cells into the ATM switch and verifies that the addressing and traffic parameters are valid (according to BellSouth XAATMS technical specifications as referenced in B. following) before relaying the ATM cells to the specified destination. The UNI is offered at transmission speeds of 1.536 Mbps, 44.210 Mbps, 149.760 Mbps and 599.040 Mbps.

The rate structure for BellSouth XAATMS is comprised of a Network Interface rate element by transmission speed and rate elements for PVC Features (representing ATM traffic). Connection to BellSouth XAATMS network interfaces is accomplished through dedicated access. For intrastate dedicated access, rates, charges, and regulations for Special Access (a.k.a. BellSouth SPA) Services are specified in Section ***E***7 preceding. Only non-channelized bandwidth may terminate on a BellSouth XAATMS network interface. (T)

As BellSouth XAATMS is a connection-oriented service, to transfer information a virtual connection must be set up between two network interfaces on a BellSouth XAATMS switch. BellSouth XAATMS supports ATM traffic via permanent virtual connections (PVCs). PVCs are bi-directional virtual channels that are established via the service provisioning process.

For BellSouth XAATMS, the logical path between a customer's premises and a network interface on the BellSouth XAATMS switch is referred to as an ATM PVC segment. The mapping together of two ATM PVC segments through the BellSouth XAATMS switch creates an ATM PVC. This ATM PVC is a logical channel representing the path from one premises associated with a BellSouth XAATMS network interface, through the BellSouth XAATMS switch, to a premises associated with a different network interface on the BellSouth XAATMS switch.

The following provides additional information on the terms used to describe the attributes of BellSouth XAATMS with respect to the PVC Feature Charges which apply for ATM PVC traffic. Information is provided regarding ATM PVC segment, ATM PVC service categories, ATM PVC traffic parameters, and ATM PVC segment bandwidth.

1. ATM PVC Segment

   For BellSouth XAATMS, the ATM PVC segment defines the logical path between a customer's premises and the network interface on the BellSouth XAATMS switch. An ATM PVC segment must be provisioned by the Company via service order activity and remain in place until requested to be removed by the customer. For BellSouth XAATMS, two ATM PVC segments are mapped together through the BellSouth XAATMS switch to create an ATM PVC representing a virtual channel through the BellSouth XAATMS network.

2. ATM PVC Service Categories

   ATM PVC service categories are established to support the service requirements of various categories of customer applications for ATM PVCs. Four ATM PVC service categories are available. The customer must specify the desired service category for each ATM PVC that is ordered. BellSouth XAATMS supports the following types of ATM PVC service categories:

   a. Constant Bit Rate (CBR): CBR allows for applications where an ATM PVC requires special network timing requirements (i.e., strict PVC cell loss, cell delay and cell delay variation performance). For example, a CBR ATM PVC would be utilized for applications requiring circuit emulation (i.e., a continuously operating logical channel) over BellSouth XAATMS at transmission speeds comparable to DS1 and DS3. Such applications would include private line like service or voice type service where delays in transmission cannot be tolerated. The customer specifies the bandwidth required for each CBR ATM PVC when it is ordered.

   b. Variable Bit Rate - Real Time (VBR-RT): VBR-RT allows for applications where an ATM PVC requires low cell delay variation. For example, VBR-RT would be utilized for applications such as variable bit rate video compression and packet voice and video which are somewhat tolerant of delay. The customer specifies the bandwidth required for each VBR-RT ATM PVC when it is ordered. (M)

   c. Variable Bit Rate - Non-Real Time (VBR-NRT): VBR-NRT allows for an ATM PVC that can tolerate larger cell delay variations than VBR-RT. For example, VBR-NRT would be utilized for applications such as data file transfers. The customer specifies the bandwidth required for each VBR-NRT ATM PVC when it is ordered. (M)

Material appearing on this page previously appeared on page(s) 11 of this section.

E21. FAST PACKET ACCESS SERVICE

E21.3 BellSouth Exchange Access Asynchronous Transfer Mode Service (XAATMS (Cont'd)

E21.3.1 Service Description (Cont'd)

A. (Cont'd)

2. PVC Service Categories (Cont'd)

   d. Unspecified Bit Rate (UBR): UBR allows for an ATM PVC where the user does not require one of the ATM PVC service categories described in (a) through (c) preceding. For example, UBR would be utilized where the customer seeks a low cost method of transporting bursty data for non-critical applications that can tolerate delay variations. The Company will attempt to deliver all ATM cells received via UBR ATM PVCs; however, network congestion may result in loss of ATM cells.

3. ATM PVC Traffic Parameters

   In accordance with the technical specifications for BellSouth XAATMS set forth in the technical publications referenced herein B ***following***., each non-UBR type ATM PVC has a set of traffic parameters to describe the characteristics of the information being transmitted. Fixed values for these traffic parameters are derived from the ATM PVC bandwidth specified by the customer for each ATM PVC. These parameters are:

   a. Peak Cell Rate (PCR): The PCR, in cells per second, is an upper bound on the source traffic that can be submitted on a BellSouth XAATMS network interface. PCR is a traffic parameter considered for both CBR and VBR service categories.

      PCR is the only traffic parameter considered for a CBR ATM PVC; the equivalent bandwidth per CBR ATM PVC equals the PCR, in cells per second, times 0.000424.

      PCR is one of three traffic parameters considered for a VBR ATM PVC. For a VBR-RT PVC, PCR is 200 ***percent*** of the SCR described following. For VBR-NRT, PCR is 400 ***percent*** of the SCR described following.

   b. Sustainable Cell Rate (SCR): The SCR, in cells per second, is an upper bound on the conforming average cell rate of a BellSouth XAATMS network interface over time.

      SCR is a traffic parameter considered only for a VBR ATM PVC. The equivalent bandwidth per VBR-RT ATM PVC is equal to the SCR, in cells per second, times 0.000512. The bandwidth per VBR-NRT ATM PVC is equal to the SCR, in cells per second, times 0.000804.

   c. Maximum Burst Size (MBS): MBS is the maximum number of consecutive cells that may be transmitted at the peak cell rate.

      MBS is a traffic parameter considered only for a VBR ATM PVC. For a VBR-RT ATM PVC, the MBS is fixed at 32 cells. For a VBR-NRT ATM PVC, the MBS is fixed at 100 cells.

4. ATM PVC Segment Bandwidth

   An ATM PVC Segment Bandwidth Charge is applicable for each CBR or VBR ATM PVC segment. Such non-UBR ATM PVC equivalent bandwidth represents the BellSouth XAATMS network resources based on the ATM PVC's traffic parameters. The ATM PVC Segment Bandwidth Charge is derived by multiplying the ATM PVC segment's equivalent bandwidth (calculation following) by the appropriate ATM PVC Segment Bandwidth Charge (expressed in megabits or increments of 64 Kbps as described following).

   The following calculations are applicable for determining non-UBR ATM PVC segment bandwidth based upon the ATM PVC category of service.

   a. CBR equivalent bandwidth is equal to the PCR (cells per second) times 0.000424. PCR is equal to increments of 64 Kbps of equivalent bandwidth times 15***0.943***, or megabits of equivalent bandwidth times 2358***.491***. (T)

   b. VBR-RT equivalent bandwidth is equal to the SCR (cells per second) times 0.000512. For VBR-RT service, the PCR is fixed at 200 percent of the SCR and the MBS is fixed at 32 cells. SCR is equal to increments of 64 Kbps of equivalent bandwidth times 125***.000***, or megabits of equivalent bandwidth times 1953***.125***. (T)

   c. VBR-NRT equivalent bandwidth is equal to the SCR (cells per second) times 0.000804. For VBR-NRT service, the PCR is fixed at 400 percent of the SCR (unless specified otherwise by the customer[1]) and the MBS is fixed at 100 cells. SCR is equal to increments of 64 Kbps of equivalent bandwidth times ***79.602***, or megabits of equivalent bandwidth times 124***3.781***. (T)

      Note 1: VBR-NRT equivalent bandwidth, where the PCR to SCR ratio is specified by the customer, is determined using the formula in Section 1.3.4 of BellSouth Technical Reference 73585.

E21. FAST PACKET ACCESS SERVICE

E21.3 BELLSOUTH EXCHANGE ACCESS ASYNCHRONOUS TRANSFER MODE SERVICE (XAATMS)(CONT'D)

E21.3.1 Service Description (Cont'd)

A. (Cont'd)

4. ATM PVC Segment Bandwidth (Cont'd)

Where the result from the ATM PVC segment equivalent bandwidth calculation is greater than 1.536 Mbps, the value is expressed in units of megabits and (if a fraction of a megabit) is rounded up to the next whole megabit. This bandwidth is multiplied by the Per Megabit Bandwidth Charge.

Where the result from the ATM PVC segment equivalent bandwidth calculation is less than or equal to 1.536 Mbps, that number should be divided by .064 Mbps to arrive at a quantity of 64 Kbps increments. If the resulting number is not a whole number, it is rounded up to the next whole number and represents the number of 64 Kbps increments that should be utilized in the derivation of the PVC Segment Bandwidth Charge. This bandwidth is multiplied by the Per Increment of 64 Kbps Bandwidth Charge.

The following table illustrates the ATM PVC segment equivalent bandwidth calculation for each non-UBR type ATM PVC with 1 megabit of bandwidth.

		Traffic Parameters			(T)
ATM PVC Service Category	**Equivalent Bandwidth**	**Peak Cell Rate[1]**	**Sustainable Cell Rate[1]**	**Maximum Burst Size[2]**	(T) (T)
CBR	1 Megabit	2,358	N/A	N/A	
VBR-RT	1 Megabit	3,906	1,953	32	
VBR-NRT	1 Megabit	4,975	1,244	100	

B. Technical Specifications

BellSouth XAATMS services installed after the effective date of this tariff will conform to the service specifications and standards for BellSouth XAATMS service (including the BellSouth XAATMS UNI) set forth in the following references:

- BellSouth Technical Reference 73585, "Asynchronous Transfer Mode (ATM) Network Interface and Performance Specifications". This document is available from BellSouth Telecommunications, Inc., Regional Documentation Coordinator, 20th Floor, 600 North 19th Street, Birmingham, AL 35203.

The specifications set forth in BellSouth TR 73585 are in conformance with the following national standards for ATM services:

- ATM Forum document, "ATM User-Network Interface Specification" (Versions 3.0 and 3.1). This document is available from ATM Forum, 2570 West El Camino Real, Suite 304, Mountain View, California, 94040.

C. Interface Specifications

In accordance with the interface specifications set forth in BellSouth TR 73585, the following is available with BellSouth XAATMS:

- ATM Cell-switched (UNI)

E21.3.2 Rate Categories

A. The following rate categories apply to BellSouth XAATMS:

1. Network Interface

This rate category provides for the customer's termination on the BellSouth XAATMS switch. The Network Interface rate category includes the BellSouth XAATMS switching function.

2. PVC Features

The PVC Features rate category provides for the ordering and provisioning of ATM PVCs in association with the BellSouth XAATMS network interface.

Note 1: Cells per second. (N)

Note 2: Cells. (N)

E21. FAST PACKET ACCESS SERVICE

E21.3 BellSouth Exchange Access Asynchronous Transfer Mode Service (XAATMS)(Cont'd) (N)

E21.3.2 Rate Categories (Cont'd) (N)

A. (Cont'd) (N)

2. PVC Features (Cont'd) (N)

The rates for PVC Features may vary by ATM PVC service category and are listed in E21.3.6.B. by applicable ATM PVC service category. (N)

a. ATM PVC Segment Charge - An ATM PVC Segment Charge applies for each ATM PVC segment established over a network interface. An ATM PVC Segment Charge applies under all ATM PVC service categories. (N)

b. ATM PVC Segment Bandwidth Charge - An ATM PVC Segment Bandwidth Charge is required per ATM PVC segment established under the CBR or VBR ATM PVC service category (but is not applicable to UBR ATM PVCs). ATM PVC bandwidth represents BellSouth XAATMS network resources required for the non-UBR ATM PVC and is based on the non-UBR ATM PVC's traffic parameters (i.e., PCR, SCR, and MBS). The total charge for this rate element per segment is determined by multiplying the non-UBR ATM PVC segment bandwidth by the ATM PVC Segment Bandwidth Charge, either Per Megabit or Per Increment of 64 Kbps (as appropriate per E21.3.1.A.4.). (N)

c. UBR Service Activation Charge - A UBR Service Activation Charge is applicable for each network interface over which UBR PVC(s) will traverse. One charge is applicable per network interface regardless of how many UBR PVCs will traverse that network interface. (N)

3. Feature Change Charge (N)

A Feature Change Charge applies for a customer request to change an existing BellSouth XAATMS PVC Feature from E21.3.6.B. for which there is no nonrecurring charge. (Examples: A Feature Change Charge applies when a customer requests a change in the ATM PVC segment bandwidth required on an existing non-UBR ATM PVC. A Feature Change Charge applies when a customer requests that UBR Service Activation be added to an existing Network Interface which currently is not activated to carry UBR ATM PVCs if the request does not also include an order for a UBR ATM PVC Segment which carries a nonrecurring charge. A customer request to change the service category of an existing CBR ATM PVC to a VBR-RT ATM PVC would not involve a Feature Change Charge but would be treated as a disconnect of the CBR ATM PVC and a new request for a VBR-RT ATM PVC for which there is a nonrecurring charge.) (N)

Only one Feature Change Charge applies per customer request that involves changes to multiple existing ATM PVCs of the same ATM PVC service category that are provisioned out of the same BellSouth XAATMS switch. (For example, one Feature Change Charge would apply per customer request to change the ATM PVC segment bandwidth associated with two existing CBR ATM PVCs provisioned out of the same BellSouth XAATMS switch.) (N)

4. Transfer of Service (N)

When a change to the customer of record is requested, transfer of service charges, as set forth in E21.3.6.D. following will apply. Charges are applied per Billing Account Number (BAN). Administrative changes, as identified below, will be made without charge(s) to the customer. Such changes require the continued provision and billing of the Access Service to the same entity. (i.e., customer remains responsible for all outstanding indebtedness for Access Service). Administrative changes are as follows: (N)

- Change of customer name (i.e., the customer of record does not change but rather the customer of record changes its name -- e.g., AT&T-Long Lines to AT&T-Long Lines to AT&T-Communications), (N)
- Change of customer or customer's end user premises address when the change of address is not a result of physical relocation of equipment, (N)
- Change in billing data (name, address, or contact name or telephone number. The customer of record does not change), (N)
- Change of customer circuit identification, (N)
- Change of billing account number, (N)
- Change of customer test line number, (N)
- Change of customer or customer's end user contact name of telephone number, and (N)
- Change of jurisdiction. (N)

E21. FAST PACKET ACCESS SERVICE

E21.3 BELLSOUTH EXCHANGE ACCESS ASYNCHRONOUS TRANSFER MODE SERVICE (XAATMS)(CONT'D)

E21.3.2 Rate Categories (Cont'd)

A. (Cont'd)

4. (Cont'd)

All other service arrangements, including physical changes to existing services, will be charged as follows:

-If the change involves the addition of an optional feature which has a separate nonrecurring charge, that nonrecurring charge will apply.

E21.3.3 Acceptance Testing

At no additional charge, and at the customer's request, the Telephone Company will cooperatively test with the customer at the time of installation.

E21.3.4 Ordering Options and Conditions

The Access Order, as set forth in Section 5 preceding, is used in the provisioning of BellSouth XAATMS. Also included in that Section are other charges which may be associated with ordering BellSouth XAATMS (e.g., Service Date Change Charges, Cancellation Charges, etc.).

E21.3.5 Rate Regulations

A. Rates and charges are specified in E21.3.6. following for the ordering and provisioning of BellSouth XAATMS. BellSouth XAATMS is available under the Fast Packet Services Payment Plan (SPP) as specified in E2.4.9.B. preceding.

B. Minimum Period of Service

The minimum period per BellSouth XAATMS rate element selected is one month.

C. Installation of Service

Nonrecurring charges apply to each BellSouth XAATMS UNI installed.

Nonrecurring charges for the Network Interface elements are set forth in E21.3.6.A. following.

D. Installation of Features

Nonrecurring charges apply to each ATM PVC segment by ATM PVC service category as set forth in E21.3.6.B. following.

E. Transfer of Service

When a change in billing data (e.g., name, address, contact name or telephone number) is requested in association with a change in the customer's record, transfer of service charges, as set forth in E21.3.6.D. following will apply. Charges are applied on a per Billing Account Number (BAN).

F. Maintenance

In order to maintain the quality of BellSouth XAATMS, the Company reserves the right to perform ***preventive*** maintenance and software updates to the network. This could result in BellSouth XAATMS being unavailable during the time period between 2:00 A.M. and 4:00 A.M. Eastern Time on any given ***Saturday***[1] or Sunday morning. However, the Company only expects to utilize this maintenance window for any given switch on the average of once a quarter. In addition, the Company will make every reasonable effort to provide advance notice to those customers likely to be affected by such maintenance work. This maintenance window may be adjusted by the Company upon written notice to the customer. (C)

Note 1: Effective March 4, 2001, the two days that preventive maintenance may be performed is changed from Wednesday and Sunday to Saturday and Sunday. (N)

E21. FAST PACKET ACCESS SERVICE

E21.3 BellSouth Exchange Access Asynchronous Transfer Mode Service (XAATMS) (Cont'd)

E21.3.5 Rate Regulations (Cont'd)

G. Service Level Agreements (N)

Service Level Agreements (SLAs) provide the Company's service level commitments for specific aspects of its ATM network's performance. SLAs are only provided for customers with at least ten ATM UNIs. Such customers must also subscribe to Network Visibility Service (specifically NVS Fault Management, On Demand Statistics and Performance Reports) which is the primary monitoring and reporting tool used for determining performance results and missed commitments. (N)

SLA commitments only apply for service wholly within Company territory; SLA commitments will not apply for service which is part of a jointly provided service. (N)

1. SLA commitments are provided for Network Availability, Cell Delivery Rate and Cell Loss Ratio. (N)
2. SLA credits are provided for missed commitments, except as specified otherwise in 3. and 4. following. An SLA report is provided through the NVS system that provides details of missed commitments upon which credits will be issued; the SLA report is available on a calendar month basis. Credits are automatically issued based upon the end-of-month SLA report; such credits shall only be issued once a month. The Company's calculation of its performance through the NVS system shall be the sole determinate of the Company's obligation to provide a credit for a missed performance commitment as set forth in this tariff. (N)
3. SLA credits for missed commitments do not apply when any commitment is not met because the Company does not have control over the circumstances causing the commitment to be missed. Situations over which the Company does not have control can be defined as, but not limited to the following: (N)
   a. any act, any omission or negligence on the part of the customer, any other customer or any third party, or of any other entity providing a portion of the service, (N)
   b. labor difficulties, governmental orders, civil commotions, acts of civil or military authority, embargoes, epidemics, declared National Emergencies, criminal actions against the Company, war, terrorist acts, riots, insurrections, fires, explosions, nuclear accidents, power blackouts, acts of God (including, but not limited to, earthquakes, floods or unusually severe weather conditions) or other circumstances beyond the Company's control, (N)
   c. the customer's premises equipment, (N)
   d. unavailability of the customer's facilities and/or equipment, and (N)
   e. customer oversubscription of the ATM UNI beyond 200%, calculated as the total VBR equivalent bandwidth on all PVCs carried by the ATM UNI (after the CBR bandwidth is subtracted) may not be greater than 200% of the ATM UNI Network Interface speed. (N)
4. SLA credits for missed commitments do not apply for situations when the customer's service is out of operation as a result of scheduled maintenance windows as set forth in E21.3.5.F. preceding. Time from such maintenance activity does not count towards the time a service is considered as unavailable during a calendar month for purposes of measuring for the Network Availability SLA. (N)
5. Service Level Commitments (N)

   SLA commitments for the specific aspects of the ATM network's performance set forth in 1. preceding are measured on a specific calendar month basis. The specific network performance commitments provided and how their performance is measured through the NVS system for a calendar month are as follows: (N)

   Network Availability Commitment: 99.9% (N)

   The Network Availability commitment is provided on the customer's total ATM network. Network Availability will measure the percentage of time during a calendar month that the customer's ATM network is available. (N)

   Network availability will be measured through the NVS system for the customer's total ATM network and for each individual ATM UNI for a whole calendar month. (N)

   For the purpose of measuring Network Availability, times during which an ATM UNI is out of operation in association with maintenance windows (as set forth in E21.3.5.F. preceding) and in association with situations over which the Company does not have control (as set forth in E21.3.5.G.3. preceding) are counted as "available" time. (N)

All BellSouth marks contained herein and as set forth in the trademarks and servicemarks section of this Tariff are owned by BellSouth Intellectual Property Corporation.

E21. FAST PACKET ACCESS SERVICE

E21.3 BellSouth Exchange Access Asynchronous Transfer Mode Service (XAATMS) (Cont'd)

E21.3.5 Rate Regulations (Cont'd)

G. Service Level Agreements (Cont'd) (N)

5. Service Level Commitments (Cont'd) (N)

SLA commitments for the specific aspects of the ATM network's performance set forth in 1. preceding are measured on a specific calendar month basis. The specific network performance commitments provided and how their performance is measured through the NVS system for a calendar month are as follows: (Cont'd) (N)

Network Availability Commitment: 99.9% (Cont'd) (N)

Total ATM Network - Network Availability: Network Availability for the customer's total network is calculated by subtracting the total unavailable time for all the ATM UNIs in a specific total calendar month, from the total available time for all the ATM UNIs in that specific total calendar month, and then dividing the difference by the total available time for all the ATM UNIs in that specific total calendar month. If the resulting percentage is less than 99.9%, the commitment for Network Availability has been missed; the Network Availability SLA Credit will then be issued on any ATM UNI whose specific individual Network Availability measurement is below 99.9%. (N)

Individual ATM UNI – Network Availability: Network Availability for an individual ATM UNI is calculated by first subtracting the unavailable time from the total available time for a specific calendar month, and then dividing it by the total available time for that specific calendar month. If the Network Availability SLA commitment was missed on the customer's total network and the resulting percentage for a specific individual ATM UNI is less than 99.9%, the Network Availability SLA Credit set forth in E21.3.5.G.6. following will then be issued on that specific individual ATM UNI. (N)

Cell Delivery Rate Commitment: by PVC Category of Service (N)

A Cell Delivery Rate commitment is provided on a per PVC basis for each ATM PVC with one of the following classes of service: CBR, VBR-RT and VBR-NRT. (A Cell Delivery Rate commitment is not provided for ATM PVCs with a UBR class of service). (N)

The specific commitment for Cell Delivery Rate for a PVC with a CBR class of service is 99.99%. (N)

The specific commitment for Cell Delivery Rate for a PVC with a VBR-RT class of service is 99.9%. (N)

The specific commitment for Cell Delivery Rate for a PVC with a VBR-NRT class of service is 99.5%. (N)

Through the NVS System, Cell Delivery Rate will measure the percentage of cells successfully delivered for a CBR or VBR PVC during a specific calendar month. The Cell Delivery Rate measures the quantity of cells received versus quantity of cells transmitted during a specific calendar month between the two ATM UNIs forming the PVC (i.e., the difference in cells transmitted versus received are considered "lost"). (N)

The monthly Cell Delivery Rate for a qualifying PVC in a specific calendar month is determined by subtracting the total cells lost from the total cells transmitted, divided by the total cells transmitted. If the resulting percentage representing the percent of cells delivered for that PVC is less than the specific commitment for that PVC class of service, this commitment has been missed and the Cell Delivery Rate SLA Credit set forth in E21.3.5.G.6. following will then be issued on this ATM PVC. (N)

Cell Loss Ratio Commitment: 1% (N)

A Cell Loss Ratio commitment is provided on a per PVC basis for every ATM PVC. (N)

Through the NVS system, Cell Loss Ratio will measure the percentage of transmitted cells not delivered (or lost) for a PVC during a specific calendar month. The Cell Loss Ratio measures the quantity of cells lost versus the quantity of cells transmitted during a specific calendar month between the two ATM UNIs forming the PVC (i.e., the difference in cells transmitted versus received are considered "lost"). (N)

The monthly Cell Loss Ratio for a PVC in a specific calendar month is determined by dividing the quantity of cells lost (determined by subtracting the quantity of cells received from the quantity of cells transmitted) by the quantity of cells transmitted during that calendar month. If the resulting percentage representing the percent of cells lost for the PVC is greater than 1%, this commitment has been missed and the Cell Delivery Rate SLA Credit set forth in E21.3.5.G.6. following will then be issued on this ATM PVC based upon its category of service. (N)

All BellSouth marks contained herein and as set forth in the trademarks and servicemarks section of this Tariff are owned by BellSouth Intellectual Property Corporation.

E21. FAST PACKET ACCESS SERVICE

E21.3 BellSouth Exchange Access Asynchronous Transfer Mode Service (XAATMS) (Cont'd)

E21.3.5 Rate Regulations (Cont'd)

G. Service Level Agreements (Cont'd) (N)

6. Credits for Missed SLA Commitments (N)

The following credits are provided for SLA performance commitments missed during a calendar month subject to the conditions outlined herein E21.3.5.G. (N)

Total SLA credits issued for an individual ATM UNI in a specific calendar month cannot exceed the total monthly recurring charges billed for that ATM UNI (i.e., cannot exceed the sum of the monthly billing for the XAATMS Network Interface rate element plus any rate elements for features). (N)

Network Availability SLA Credit: (N)

This credit is appropriate when the Network Availability commitment for the customer's total network is missed; this credit is then applied per individual ATM UNI that does not specifically meet the Network Availability commitment. (N)

For each individual ATM UNI not meeting this commitment for a specific calendar month, a credit equal to 1/30 of its monthly recurring charge for the XAATMS Network Interface rate element will be issued. (N)

Cell Delivery Rate SLA Credit: (N)

This credit is applied per individual ATM PVC (i.e., PVC Segment pair forming the PVC) that does not meet the Cell Delivery Rate commitment. (N)

For each PVC not meeting this commitment for a specific calendar month, a credit equal to $5.00 for each PVC Segment will be issued. (N)

Cell Loss Ratio SLA Credit: (N)

This credit is applied per individual ATM PVC (i.e., PVC Segment pair forming the PVC) that does not meet the Cell Loss Ratio commitment. (N)

For each PVC not meeting this commitment for a specific calendar month, a credit equal to $5.00 for each PVC Segment will be issued. (N)

All BellSouth marks contained herein and as set forth in the trademarks and servicemarks section of this Tariff are owned by BellSouth Intellectual Property Corporation.

E21. FAST PACKET ACCESS SERVICE

E21.3 BELLSOUTH EXCHANGE ACCESS ASYNCHRONOUS TRANSFER MODE SERVICE (XAATMS)(CONT'D)

E21.3.6 Rates and Charges

A. Network Interface

1. Per UNI

	Nonrecurring Charges	Month To Month	A 12 to 24 Mos. Plan	B 25 to 48 Mos. Plan	USOC
(a) 1.536 Mbps	**$500.00**	**$395.00**	**$360.00**	**260.00**	**XAA11**
(b) 44.210 Mbps	**750.00**	**2,426.00**	**1,920.00**	**1,550.00**	**XAA14**
(c) 149.760 Mbps	**1,000.00**	**4,500.00**	**4,050.00**	**2,880.00**	**XAA17**
(d) 599.040 Mbps	**1,500.00**	**9,000.00**	**8,100.00**	**5,800.00**	**XAA19**

B. PVC Features

1. CBR ATM PVC Service Category

	Nonrecurring Charges	Month To Month	USOC	
(a) PVC Segment Charge, Per Segment	**$70.00**	**$5.00**	**XAACS**	
(b) Per Megabit-Bandwidth Charge, Per Segment, or	**-**	**25.00**	**XAACM**	
(c) Per Increment of 64 Kbps-Bandwidth Charge, Per Segment	**-**	**1.60**	**XAACK**	
2. VBR-RT ATM PVC Service Category				
(a) PVC Segment Charge, Per Segment	**70.00**	**5.00**	**XAAVS**	
(b) Per Megabit-Bandwidth Charge, Per Segment, or	**-**	**25.00**	**XAAVM**	
(c) Per Increment of 64 Kbps-Bandwidth Charge, Per Segment	**-**	**1.60**	**XAAVK**	
3. VBR-NRT ATM PVC Service Category				
(a) PVC Segment Charge, Per Segment	**70.00**	**5.00**	**XAANS**	
(b) Per Megabit-Bandwidth Charge, Per Segment, or	**-**	**25.00**	**XAANM**	
(c) Per Increment of 64 Kbps-Bandwidth Charge, Per Segment	**-**	**1.60**	**XAANK**	
4. UBR ATM PVC Service Category				
(a) PVC Segment Charge, Per Segment	**70.00**	**5.00**	**XAAUS**	
Per Customer Connection				
(b) 1.536 Mbps UBR Service Activation Charge	**-**	**10.00**	**XAAA1**	
(c) 44.210 Mbps UBR Service Activation Charge	**-**	**250.00**	**XAAA4**	
(d) 149.760 Mbps UBR Service Activation Charge	**-**	**750.00**	**XAAA7**	(I)
(e) 599.040 Mbps UBR Service Activation Charge	**-**	**3,000.00**	**XAAA9**	(I)

C. Feature Change Charge

(a) Per Occurrence, Per Feature	**75.00**	**None**	**XAAFC**

D. Transfer of Service

(a) Per Billing Account Number	**75.00**	**None**	**XAATF**

E21. FAST PACKET ACCESS SERVICE

E21.4 Reserved For Future Use

E21.5 Reserved For Future Use

E21.6 BellSouth Network Visibility Service

E21.6.1 General

A. BellSouth Network Visibility Service (NVS) is available on an optional basis as a feature of Exchange Access Frame Relay Service (XAFRS) (a.k.a. BellSouth Exchange Access Frame Relay Service) and BellSouth Exchange Access Asynchronous Transfer Mode Service (XAATMS).

B. BellSouth NVS is a customer network management tool that provides customers a view into their BellSouth Fast Packet network for monitoring and trouble shooting purposes. The following BellSouth NVS options are available for XAFRS (a.k.a. BellSouth Exchange Access Frame Relay Service) and BellSouth XAATMS: Fault Management, On Demand Statistics and Performance Reports.

C. BellSouth NVS supports hierarchical customer names. For example, a customer defines an overall network name (usually the customer name) and then may choose to establish multiple sub-network names. A maximum of five hierarchical tiers are available (the overall network plus four sub-network tiers).

D. Access to ***the*** BellSouth NVS ***graphical interface*** is via a Web interface***; alternatively, a*** dial or dedicated method described in Section A32. of the General Subscriber Service Tariff may also be used to access ***the*** NVS ***graphical interface***. ***Additionally, NVS may be accessed via a Remote Message Interface for the collection of raw data.*** For security reasons, customers are required to identify themselves via a username and password. The username and password are assigned at the time the account is established. Following is a description and requirements for each type of ***Management Access Interface***. (C)

1. Web Interface - This interface allows customers to access ***the*** BellSouth NVS ***graphical interface*** via the Web using a standard Web browser. This type of access requires a Security Card. (T)

   a. Security Card – This card provides the customer a unique password identification code which will electronically change periodically.

      If the customer has purchased a Security Card in conjunction with another feature or service offered by BellSouth, that Security Card may also be used in conjunction with BellSouth NVS. It is the customer's responsibility to notify BellSouth of an existing Security Card so BellSouth can ensure that the card is validated for multiple features and/or services.

2. Dial or Dedicated Interface ***access to the BellSouth NVS graphical interface*** – See A32.1.2 of the General Subscriber Service Tariff. (T)

3. Remote Message Interface – This interface will allow SSH-IP connectivity to BellSouth NVS from other compatible Network Management systems for the collection of raw data. The customer must have SSH access to the NVS platform. Connectivity must be via a Frame Relay PVC to the Company network. Technical details and limitations on the Remote Message Interface can be found in BellSouth Technical Reference TR-73587. (N)

E. The customer is responsible for providing and maintaining all terminal equipment necessary to access BellSouth NVS.

F. A customer may subscribe to BellSouth NVS on a monthly basis. An account is established which will include the XAFRS (a.k.a. BellSouth Exchange Access Frame Relay Service) and BellSouth XAATMS Network Interfaces designated by the customer to have BellSouth NVS capability. Customers may choose to subscribe to BellSouth NVS for all Network Interfaces in their BellSouth Fast Packet network or choose BellSouth NVS for only a portion.

All BellSouth marks contained herein and as set forth in the trademarks and servicemarks section of this Tariff are owned by BellSouth Intellectual Property Corporation.

E21. FAST PACKET ACCESS SERVICE

E21.6 BellSouth Network Visibility Service (Cont'd) (N)

E21.6.1 General (Cont'd) (N)

G. BellSouth NVS is available in two packages, 1) Fault Management and On Demand Statistics or 2) Fault Management, On Demand Statistics and Performance Reports. All network interfaces within a customer's account must be under the same package. If a customer desires to have both packages, a separate account must be established for each package type. (N)

1. Fault Management (N)

   BellSouth NVS provides the ability to monitor fault and alarm information as network events occur. If a BellSouth network event results in automatic rerouting of customer owned PVCs on a Network Interface within the BellSouth Fast Packet network, such that those PVCs are not service impacted, then BellSouth will not send PVC events to the customer. The following Fault Management features are available on a customer and sub-network basis: (N)

   - BellSouth will provide to the customer, in near real time, all events, faults, and network alarms on any Network Interface or PVC. (N)
   - The customer can determine the severity level of alarms displayed and suppress the alarms they do not wish to view. (N)

2. On Demand Statistics (N)

   BellSouth NVS provides customers statistics for each Network Interface and PVC on a customer and sub-network basis. (N)

3. Performance Reports (N)

   BellSouth NVS provides XAFRS (a.k.a. BellSouth Exchange Access Frame Relay Service) and BellSouth XAATMS customers network performance reports on their BellSouth data network. Customers have the capability of requesting performance reports for interfaces. (Interfaces are defined as network interfaces and PVCs). BellSouth NVS provides a measure of the level of network performance of a customer's network and individual interfaces that is called the Network Performance Level. The Network Performance Level components include Incoming Utilization, Outgoing Utilization, Discarded Frames/Cells and Congestion. The Network Performance Level is used in several reports to provide a weighted performance measure taking into account all the performance parameters mentioned above. (N)

   Historical Performance reports will baseline historic network performance, trend future performance and highlight network performance problems. The following selection of reports is available: (N)

   a. Network Summary Report - Provides an overview of the customer's network performance in terms of Total Frames/Cells Transmitted and Received, Percent Total Utilization, Total Frames/Cells Discarded, and Percent Frames/Cells Discarded of Total Frames/Cells Transmitted and Received. (N)

   b. Forecast Report - Provides the network interfaces or PVCs that are projected to exceed customer specific thresholds of Utilization and Congestion. (N)

E21. FAST PACKET ACCESS SERVICE

E21.6 BellSouth Network Visibility Service (Cont'd) (N)

E21.6.1 General (Cont'd) (N)

G. (Cont'd) (N)

3. Performance Reports (Cont'd) (N)

c. Network Interface Performance Report - Provides the Network Performance Level on a customer selectable interface (network interface or PVC). (N)

d. Capacity Planning Report - Provides the top ten over-utilized and top ten under-utilized interfaces (network interface or PVC). (N)

e. Threshold Exceptions Report - Provides a daily report on the top ten interfaces that exceed a customer selectable threshold parameter. These parameters are Input Utilization, Output Utilization, Incoming Congestion, Outgoing Congestion, In Discards, and Out Discards. (N)

f. Top Ten Report - Provides a daily report of the top ten interfaces with the highest volumes and the worst Network Performance Level. It also specifies the top ten interfaces with the greatest change in both volume and Network Performance Level. (N)

E21.6.2 Rate Regulations (N)

A. Rates and charges are specified in E21.6.4 following for BellSouth NVS. (N)

B. The minimum period of service is one month. (N)

C. The rates and charges set forth for BellSouth NVS provide for the furnishing of service where suitable facilities are available. (N)

D. In order to maintain the quality of BellSouth NVS, the Company reserves the right to perform preventive maintenance and software updates. This could result in BellSouth NVS being unavailable during the time period between Midnight and 3:00 A.M. Eastern Time on Sundays. In addition, preventive maintenance may be performed on the XAFRS (a.k.a. BellSouth Exchange Access Frame Relay Service and BellSouth XAATMS circuits being monitored by BellSouth NVS on any given Saturday or Sunday between 2:00 A.M. and 4:00 A.M. Eastern Time. BellSouth NVS will be unable to view these circuits while preventive maintenance is being performed. The Company only expects to utilize this maintenance window on the average of once a quarter. However, the Company reserves the right to perform maintenance at any time at its discretion that it believes such maintenance is necessary. The Company will make a reasonable effort to provide notice to those customers likely to be affected by such maintenance work. (N)

E21. FAST PACKET ACCESS SERVICE

E21.6 BellSouth Network Visibility Service (Cont'd)

E21.6.3 Rate Categories

The following rate categories apply to BellSouth NVS:

A. Service Establishment Charge

The Service Establishment Charge is a nonrecurring charge which applies per XAFRS (a.k.a. BellSouth Exchange Access Frame Relay Service) or BellSouth XAATMS customer account. If a customer is both a XAFRS (a.k.a. BellSouth Exchange Access Frame Relay Service) and BellSouth XAATMS customer, only one Service Establishment Charge will apply. This charge covers the initial establishment and set-up of the customer account in the BellSouth NVS database. A username(s) and password(s) will be assigned for use by the customer in accessing their account. At the time the account is established, a customer may also choose to establish sub accounts.

B. Fault Management and On Demand Statistics

A monthly charge applies for each Network Interface in the customer's network with BellSouth NVS capability. A nonrecurring charge is applicable per Network Interface at the time of installation.

C. Fault Management, On Demand Statistics and Performance Reports

A monthly charge applies for each Network Interface in the customer's network with BellSouth NVS capability. A nonrecurring charge is applicable per Network Interface at the time of installation.

D. Subsequent Modification Charge

The Subsequent Modification Charge is a nonrecurring charge which applies per Network Interface when a BellSouth NVS customer requests that existing BellSouth NVS Network Interfaces, or PVC's on the Network Interface, be modified. Examples of this charge include change of customer name and movement between packages. This charge is not applicable:

- when a new PVC is added to an existing BellSouth NVS Network Interface and BellSouth NVS is requested for the new PVC, or
- for a request to change a password.

E. Management Access Interface

All customers must have a Management Access Interface. This connection allows the customer to monitor their network. A monthly charge applies for each Web Interface ***and each Remote Message Interface; a*** nonrecurring charge is applicable per ***Web Interface and per Remote Message Interface*** at the time of installation. A Security Card described below is required for each web access. See A32.1.2 of the General Subscriber Service Tariff for a dial or dedicated access option. (C)

- Security Card – The Security Card charge specified in E21.6.4 E. following will apply for the initial card or for the issuance of additional cards for additional users or to replace a lost, damaged or expired card.

All BellSouth marks contained herein and as set forth in the trademarks and servicemarks section of this Tariff are owned by BellSouth Intellectual Property Corporation.

E21. FAST PACKET ACCESS SERVICE

E21.6 BellSouth Network Visibility Service (Cont'd)

E21.6.4 Rates and Charges

A. Service Establishment Charge

1. Per Customer

	Nonrecurring Charge	USOC
(a) Each	**$250.00**	**NVSSE**

B. Fault Management and On Demand Statistics

1. Per XAFRS Network Interface

	Nonrecurring Charge	Monthly Rate	USOC	
(a) Per DS0	**$75.00**	***$0.00***	**NVSFO**	(R)
(b) Per DS1	**75.00**	***0.00***	**NVSF1**	(R)
(c) Per DS3	**75.00**	***0.00***	**NVSF3**	(R)

2. Per BellSouth XAATMS Network Interface

(a) Per DS1	**75.00**	***0.00***	**NVSA1**	(R)
(b) Per DS3	**75.00**	***0.00***	**NVSA3**	(R)
(c) Per OC3	**75.00**	***0.00***	**NVSAC**	(R)
(d) Per OC12	**75.00**	***0.00***	**NVSA2**	(R)

C. Fault Management, On Demand Statistics and Performance Reports

1. Per XAFRS Network Interface

(a) Per DS0	**75.00**	***0.00***	**NVSRO**	(R)
(b) Per DS1	**75.00**	***0.00***	**NVSR1**	(R)
(c) Per DS3	**75.00**	***0.00***	**NVSR3**	(R)

2. Per BellSouth XAATMS Network Interface

(a) Per DS1	**75.00**	***0.00***	**NVST1**	(R)
(b) Per DS3	**75.00**	***0.00***	**NVST3**	(R)
(c) Per OC3	**75.00**	***0.00***	**NVSTC**	(R)
(d) Per OC12	**75.00**	***0.00***	**NVST2**	(R)

D. Subsequent Modification Charge

1. Per Network Interface

	Nonrecurring Charge	USOC
(a) Each	**$70.00**	**NVSSM**

E. Management Access Interface[1]

1. Web Interface

	Nonrecurring Charge	Monthly Rate	USOC
(a) Each	**$125.00**	**$25.00**	**NVSW1**

2. Remote Message Interface

(a) Each	**125.00**	**25.00**	**NVSRM**

F. Security Card

1. Per Card

	Nonrecurring Charge	USOC
(a) Each	**$100.00**	**NVSSC**

Note 1: See A32.1.2 of the General Subscriber Service Tariff for a dial or dedicated access option.

All BellSouth marks contained herein and as set forth in the trademarks and servicemarks section of this Tariff are owned by BellSouth Intellectual Property Corporation.

OFFICIAL APPROVED VERSION, RELEASED BY BSTHQ

E22. RESERVED FOR FUTURE USE (N)

CONTENTS (N)

E22. RESERVED FOR FUTURE USE (N)

OFFICIAL APPROVED VERSION, RELEASED BY BSTHQ

E23. RESERVED FOR FUTURE USE (N)

CONTENTS (N)

E23. RESERVED FOR FUTURE USE (N)

OFFICIAL APPROVED VERSION, RELEASED BY BSTHQ

E24. RESERVED FOR FUTURE USE (N)

CONTENTS (N)

E24. RESERVED FOR FUTURE USE (N)

E25. RESERVED FOR FUTURE USE (N)

CONTENTS (N)

E25. RESERVED FOR FUTURE USE (N)

E26. BELLSOUTH SWA CONTRACT TARIFFS

CONTENTS

E26.1	**BellSouth SWA Contract Tariff No. SC2002-01 (Obsoleted, See Section E126)**	1	
E26.2	**BellSouth SWA Contract Tariff No. SC2003-01**	5	
E26.2.1	General Regulations	5	
E26.2.2	Subscription Conditions	5	
E26.2.3	Mergers and Acquisitions and Transfer of Service	6	
E26.2.4	BellSouth SWA Revenue Volume Discounts	7	
E26.2.5	BellSouth SWA Contract Tariff No. SC2003-01 Volume Discount Plan	7	
E26.3	**BellSouth SWA Contract Tariff No. SC2005-01**	9	
E26.3.1	General Regulations	9	
E26.3.2	Subscription Conditions	9	
E26.3.3	Mergers and Acquisitions and Transfer of Service	10	
E26.3.4	BellSouth SWA Revenue Volume Discounts	11	
E26.3.5	BellSouth SWA Contract Tariff No. SC2005-01 Volume Discount Plan	11	
E26.4	**BellSouth SWA Contract Tariff No. SC2005-02**	13	(N)
E26.4.1	General Regulations	13	(N)
E26.4.2	Subscription Conditions	13	(N)
E26.4.3	Mergers and Acquisitions and Transfer of Service	14	(N)
E26.4.4	BellSouth SWA Revenue Volume Discounts	14	(N)
E26.4.5	BellSouth SWA Contract Tariff No. SC2005-02 Volume Discount Plan	15	(N)

All BellSouth marks contained herein and as set forth in the trademarks and servicemarks section of this Tariff are owned by BellSouth Intellectual Property Corporation.

E26. BELLSOUTH SWA CONTRACT TARIFFS

E26.1 BellSouth SWA Contract Tariff No. SC2002-01 – Obsoleted (See Section E126) (O)

All BellSouth marks contained herein and as set forth in the trademarks and servicemarks section of this Tariff are owned by BellSouth Intellectual Property Corporation.

E26. BELLSOUTH SWA CONTRACT TARIFFS

E26.1 BellSouth SWA Contract Tariff No. SC2002-01 – Obsoleted (See Section E126) (Cont'd) (O)

All BellSouth marks contained herein and as set forth in the trademarks and servicemarks section of this Tariff are owned by BellSouth Intellectual Property Corporation.

E26. BELLSOUTH SWA CONTRACT TARIFFS

E26.1 BellSouth SWA Contract Tariff No. SC2002-01 - Obsoleted (See Section E126) (Cont'd) (O)

All BellSouth marks contained herein and as set forth in the trademarks and servicemarks section of this Tariff are owned by BellSouth Intellectual Property Corporation.

E26. BELLSOUTH SWA CONTRACT TARIFFS

E26.1 BellSouth SWA Contract Tariff No. SC2002-01 – Obsoleted (See Section E126) (Cont'd) (O)

All BellSouth marks contained herein and as set forth in the trademarks and servicemarks section of this Tariff are owned by BellSouth Intellectual Property Corporation.

E26. BELLSOUTH SWA CONTRACT TARIFFS

E26.2 BellSouth SWA Contract Tariff No. SC2003-01 (N)

E26.2.1 General Regulations (N)

A. The start date of BellSouth SWA Contract Tariff No. SC2003-01 is the first bill period following execution of the Letter of Agreement with the customer. (N)

B. Customers may choose either a one or two year agreement that terminates upon completion. (N)

C. The regulations, terms, conditions and volume discounts provided herein shall apply to the customer's applicable BellSouth SWA usage and revenues achieved in the state of South Carolina. (N)

E26.2.2 Subscription Conditions (N)

A. To subscribe to BellSouth SWA Contract Tariff No. SC2003-01, the customer and BellSouth must execute a Letter of Agreement. BellSouth shall provide a Letter of Agreement for the customer to execute. The Letter of Agreement shall contain: (N)

1. BellSouth SWA Contract Tariff No. SC2003-01 tariff reference (N)
2. Start and termination date (N)
3. Customer's name and billing address (N)
4. Billing Account Number the credit will be applied (N)
5. Access Customer Name Abbreviations (ACNAs) and Customer Identifications Codes (CICs) to be included in the BellSouth SWA Contract Tariff No. SC2003-01 (N)
6. BellSouth SWA Contract Tariff No. SC2003-01 term (i.e., one or two years) (N)
7. Commitment Level Usage (N)

B. To subscribe to BellSouth SWA Contract Tariff No. SC2003-01, the customer must have been a BellSouth SWA customer for the previous twelve (12) months. (N)

C. The customer's most recent twelve (12) months local switching usage will be projected forward for twelve (12) months. The customer's annual usage commitment level will be a minimum of 90 percent of this projection. (N)

D. When the customer subscribes to BellSouth SWA Contract Tariff No. SC2003-01, the customer must identify to the Telephone Company, all Access Customer Name Abbreviations (ACNAs) and Carrier Identification Codes (CICs) to be included in BellSouth SWA Contract Tariff No. SC2003-01. (N)

E. The customer must be the billing responsible party for all BellSouth SWA billing elements associated with the ACNAs and CICs included in the Letter of Agreement. (N)

F. Any additions after the Letter of Agreement is executed will be handled as a merger or acquisition or transfer of service regulations as set forth in E26.2.3 following. (N)

G. A customer subscribing to BellSouth SWA Contract Tariff No. SC2003-01 may not subscribe to any other BellSouth SWA Contract Tariff for the services as set forth in H. following. (N)

H. The following BellSouth SWA services will be used in determining the BellSouth SWA revenues that are eligible to receive the volume discount based on the established local switching usage Commitment Level. (N)

1. Local Switching (N)

Local Switching 1 (N)

Local Switching 2 (N)

Local Switching 3 (N)

Local Switching 4 (N)

I. A customer may not combine its local switching minutes of use with another customer, whether an individual, partnership, association or corporation, for the purpose of meeting the established minimum local switching usage, as set forth in E26.2.5.B. following. (N)

E26. BELLSOUTH SWA CONTRACT TARIFFS

E26.2 BellSouth SWA Contract Tariff No. SC2003-01 (Cont'd) (N)

E26.2.2 Subscription Conditions (Cont'd) (N)

J. Cancellation of BellSouth SWA Contract Tariff No. SC2003-01 (N)

1. Except as set forth in 2. following, during the term period of BellSouth SWA Contract Tariff No. SC2003-01 as defined by the customer's Letter of Agreement, a customer who cancels this BellSouth Contract Tariff No. SC2003-01 is subject to shortfall and termination liability as described in E26.2.5, following. (N)

2. A customer who cancels this BellSouth SWA Contract Tariff No. SC2003-01 under this paragraph is subject only to shortfall calculations of E26.2.5, following. Cancellation of BellSouth SWA Contract Tariff No. SC2003-01 and subscription to another BellSouth SWA Contract Tariff is allowed only on the anniversary date as defined by the customer's Letter of Agreement and upon meeting the condition below. At a minimum, the term of the new Letter of Agreement will be the remaining term of the initial Letter of Agreement. (N)

   a. Customer adds CIC codes that are desired to become part of the volume discount contract tariff. (N)

K. The services to which the incentives set forth in this BellSouth SWA Contract Tariff No. SC2003-01 apply, are obtained from Section E6. of this Tariff. BellSouth reserves the right to change the terms, conditions, rates, and charges applicable for services in Section E6. or other sections of this Tariff during the term of this Contract Tariff unless otherwise specified in this Contract Tariff. General regulations and ordering options for the BellSouth SWA services are as set forth in Sections E2. and E5. of this Tariff. (N)

E26.2.3 Mergers and Acquisitions and Transfer of Service (N)

A. In the event the customer merges with another company or is acquired by another company; the following regulations will apply: (N)

1. The customer may elect to terminate subscription to BellSouth SWA Contract Tariff No. SC2003-01. A customer who cancels subscription to BellSouth SWA Contract Tariff No. SC2003-01 is subject to shortfall and termination liability as described in E26.2.5, following. (N)

2. The customer may not combine revenues with the merged or acquired company's revenues for the purpose of obtaining volume discounts provided under BellSouth SWA Contract Tariff No. SC2003-01. (N)

3. The customer may continue subscribing to BellSouth SWA Contract Tariff No. SC2003-01 for the duration of the term provided that the customer continues the subscription as if it were the same entity that existed prior to the merger or acquisition. (N)

B. If customer requests a transfer of service, pursuant to Transfer of Service regulations in Sections E2. and E6. of this Tariff, the customer's subscription to BellSouth SWA Contract Tariff No. SC2003-01 shall be terminated. (N)

E26. BELLSOUTH SWA CONTRACT TARIFFS

E26.2 BellSouth SWA Contract Tariff No. SC2003-01 (Cont'd) (N)

E26.2.4 BellSouth SWA Revenue Volume Discounts (N)

A. Each year of the customer's Letter of Agreement is defined as twelve (12) consecutive bill periods following the beginning date of the Letter of Agreement. For purposes of calculating the BellSouth SWA volume discounts, month one (1) is the first complete bill period after the beginning date of the Letter of Agreement. For example, if the beginning date of the Letter of Agreement is June 6, 2003 bill period, and the bill period is the twelfth, then month one (1) for purposes of calculating the BellSouth SWA volume discounts will be the July 12, 2003 bill period. (N)

B. The BellSouth SWA Pricing Flexibility volume discounts provided herein will be determined during the first month after the end of each year of the customer's Letter of Agreement. During the second month following the end of each year of the Letter of Agreement, the BellSouth SWA volume discounts will be applied via a credit to the customer's bill. (N)

C. The BellSouth SWA volume discounts are applicable to the BellSouth SWA services as set forth in E26.2.2.H. preceding. (N)

D. The BellSouth SWA volume discounts specified in BellSouth SWA Contract Tariff No. SC2003-01 will not be applied to taxes and nonrecurring BellSouth SWA revenues. (N)

E26.2.5 BellSouth SWA Contract Tariff No. SC2003-01 Volume Discount Plan (N)

A. BellSouth SWA Contract Tariff No. SC2003-01 provides for annual volume discounts based upon annual local switching minutes of use (MOU) above a stated minimum usage achieved, and the Commitment Level and term year as defined in the Letter of Agreement. Discounts are achieved in term years when the achieved local switching volume is equal to or above a Commitment Level usage. When equaled or exceeded, discounts are applied to the Commitment Level usage. (N)

B. The Commitment Level usage and the achievable volume discounts associated with the BellSouth SWA services are shown in the table below. Volume discounts are not applicable to any usage levels outside of the MOU usage ranges stated in table below: (N)

Annual Usage Commitment Level and Discounts		
Commitment Level MOUs	**Year 1 Discounts**	**Year 2 Discounts**
> 30M to 60M	0.7%	1.2%
> 60M to 180M	1.3%	1.8%
> 180M to 300M	2.7%	3.2%
> 300M to 420M	4.0%	4.5%
> 420M to 540M	5.4%	5.9%
> 540M	6.7%	7.2%

(N)

C. The volume discount received for a given year under BellSouth SWA Contract Tariff No. SC2003-01 is determined by multiplying the eligible BellSouth SWA revenue associated with the Commitment Level usage, times the discount percentage achieved as determined in A. preceding. (N)

The following example demonstrates application of the discount: (N)

Customer Annual Commitment Level – 180M minutes of use (N)

Achieved Volume – 190M minutes of use (N)

Contract Year – first year of a one-year contract (N)

All usage is Local Switching 2 (N)

Local Switching 2 rate - $.006979/minute (N)

From Table – applicable discount is 2.7 percent (N)

Therefore: (N)

Volume Discount = Eligible Revenue X Discount Rate (N)

Volume Discount = (180M minutes X $.006979/minute) X 2.7 percent (N)

Volume Discount = $33,918 (N)

E26. BELLSOUTH SWA CONTRACT TARIFFS

E26.2 BellSouth SWA Contract Tariff No. SC2003-01 (Cont'd) (N)

E26.2.5 BellSouth SWA Contract Tariff No. SC2003-01 Volume Discount Plan (Cont'd) (N)

D. When the Commitment Level usage volume is not met during a year of the term, a shortfall liability is incurred by the customer. The shortfall usage is equal to the difference in the customer's Commitment Level and the achieved local switching usage volume. The shortfall liability would be equal to the shortfall usage, times the customer's average local switching rate per MOU. The customer's average local switching rate per MOU is equal to revenue generated from the local switching usage rate elements as described in E26.2.2.H. preceding, divided by the achieved local switching usage volume. (N)

The following example demonstrates application of shortfall: (N)

Customer Annual Commitment Level – 180M minutes of use (N)

Achieved Volume – 177M minutes of use (N)

Contract Year – first year of a one-year contract (N)

All usage is Local Switching 2 (N)

Local Switching 2 rate - $.006979/minute (N)

Therefore: (N)

Shortfall Usage = Commitment Level – Achieved Volume (N)

Shortfall Usage = 180M minutes – 177M minutes (N)

Shortfall Usage = 3M minutes (N)

Shortfall Liability = Shortfall Usage X Avg Local Switching Rate (N)

Shortfall Liability = 3M minutes X $.006979/minute (N)

Shortfall Liability = $20,937 (N)

E. In the event of an early termination of the contract, shortfall usage calculations will be based upon the monthly usage values which comprise the annual Commitment Level. If upon comparing the shortened term commitment to the achieved usage level, a shortfall usage is determined to exist, then a shortfall liability is incurred. The shortfall liability will be calculated as described in D. above. (N)

F. A termination liability is incurred when a customer terminates the agreement before the end date of the agreement. The termination liability is equal to 90 percent of the volume discount received during the term of the agreement. (N)

G. This BellSouth SWA Contract Tariff No. SC2003-01 will also provide, as a one-time promotional offer, that the customer may obtain a partial prepayment of the first annual SWA Pricing Flexibility volume discount. To qualify for this prepayment, the customer must subscribe to this plan via a Letter of Agreement (LOA) to begin no later than 30 days after the effective date of the tariff. Using the customer's usage between the commencement of this LOA and December 4, 2003, BellSouth will determine if the customer is on track to earn the discount described at the end of the first year of the LOA. If so, BellSouth will calculate by December 15, 2003, the prorated volume discount and remit to the subscriber the prepayment of this pro rata volume discount as soon as practical thereafter. At the end of the first year of the LOA, if an annual credit has been earned, the prepayment will be subtracted from this annual volume discount amount. If, at the end of the first year, the volume discount has not been earned, then the prepayment shall be returned to BellSouth with interest calculated for the period during which the prepayment was held by the customer (Interest equals prime plus two percent – the prime interest rate is that rate which is effective at the end of the first year of the LOA.). (N)

E26. BELLSOUTH SWA CONTRACT TARIFFS (N)

E26.3 BellSouth SWA Contract Tariff No. SC2005-01 (N)

E26.3.1 General Regulations (N)

A. The start date of BellSouth SWA Contract Tariff No. SC2005-01 is the first bill period following execution of the Letter of Agreement with the customer. (N)

B. The BellSouth SWA Contract Tariff is a one (1) year agreement that terminates upon completion. (N)

C. The regulations, terms, conditions and volume discounts provided herein shall apply to the customer's applicable BellSouth SWA usage and revenues achieved in the state of South Carolina. (N)

E26.3.2 Subscription Conditions (N)

A. To subscribe to BellSouth SWA Contract Tariff No. SC200-01, the customer and BellSouth must execute a Letter of Agreement. BellSouth shall provide a Letter of Agreement for the customer to execute. The Letter of Agreement shall contain: (N)

1. BellSouth SWA Contract Tariff No. SC2005-01 tariff reference (N)
2. Start and termination date (N)
3. Customer's name and billing address (N)
4. Billing Account Number the credit will be applied (N)
5. Access Customer Name Abbreviations (ACNAs) and Customer Identifications Codes (CICs) to be included in the BellSouth SWA Contract Tariff No. SC2005-01 (N)
6. BellSouth SWA Contract Tariff No. SC2005-01 term (N)
7. Commitment Level Usage (N)

B. To subscribe to BellSouth SWA Contract Tariff No. SC200-01, the customer must have been a BellSouth SWA customer for the previous twelve (12) months. (N)

C. The customer's most recent twelve (12) months local switching usage will be projected forward for twelve (12) months. The customer's annual usage commitment level will be a minimum of ninety-five percent (95%) of this projection. Commitment levels ranging from ninety-five percent (95%) through less than ninety-eight (98%) of this projection are subject to the shortfall calculations as described in E26.3.5.E. following when commitment levels are not attained. For commitment levels ninety-eight percent (98%) or greater, shortfall liabilities will not apply unless the customer cancels this SWA Contract Tariff No. SC2005-01. (N)

D. When the customer subscribes to BellSouth SWA Contract Tariff No. SC2005-01, the customer must identify to the Telephone Company, all Access Customer Name Abbreviations (ACNAs) and Carrier Identification Codes (CICs) to be included in BellSouth SWA Contract Tariff No. SC2005-01. (N)

E. The customer must be the billing responsible party for all BellSouth SWA billing elements associated with the ACNAs and CICs included in the Letter of Agreement. (N)

F. Any additions after the Letter of Agreement is executed will be handled as a merger or acquisition or transfer of service regulations as set forth in E26.3.3 following. (N)

G. A customer subscribing to BellSouth SWA Contract Tariff No. SC2005-01 may not subscribe to any other BellSouth SWA Contract Tariff for the services as set forth in H. following. (N)

H. The following BellSouth SWA services will be used in determining the BellSouth SWA revenues that are eligible to receive the volume discount based on the established local switching usage Commitment Level. (N)

1. Local Switching (N)

Local Switching 1 (N)

Local Switching 2 (N)

Local Switching 3 (N)

Local Switching 4 (N)

I. A customer may not combine its local switching minutes of use with another customer, whether an individual, partnership, association or corporation, for the purpose of meeting the established minimum local switching usage, as set forth in E26.3.5.B. following. (N)

All BellSouth marks contained herein and as set forth in the trademarks and servicemarks section of this Tariff are owned by BellSouth Intellectual Property Corporation.

E26. BELLSOUTH SWA CONTRACT TARIFFS (N)

E26.3 BellSouth SWA Contract Tariff No. SC2005-01 (Cont'd) (N)

E26.3.2 Subscription Conditions (Cont'd) (N)

J. Cancellation of BellSouth SWA Contract Tariff No. SC2005-01 (N)

1. Except as set forth in 2. following, during the term period of BellSouth SWA Contract Tariff No. SC2005-01 as defined by the customer's Letter of Agreement, a customer who cancels this BellSouth Contract Tariff No. SC2005-01 is subject to shortfall and termination liability as described in E26.3.5. following. (N)

2. A customer who cancels this BellSouth SWA Contract Tariff No. SC2005-01 under this paragraph is subject only to shortfall calculations of E26.3.5. following. Cancellation of BellSouth SWA Contract Tariff No. SC2005-01 and subscription to another BellSouth SWA Contract Tariff is allowed only on the anniversary date as defined by the customer's Letter of Agreement and upon meeting the condition below. At a minimum, the term of the new Letter of Agreement will be the remaining term of the initial Letter of Agreement. (N)

   a. Customer adds CIC codes that are desired to become part of the volume discount contract tariff. (N)

K. The services to which the incentives set forth in this BellSouth SWA Contract Tariff No. SC2005-01 apply, are obtained from Section E6. of this Tariff. BellSouth reserves the right to change the terms, conditions, rates, and charges applicable for services in Section E6. or other sections of this Tariff during the term of this Contract Tariff unless otherwise specified in this Contract Tariff. General regulations and ordering options for the BellSouth SWA services are as set forth in Sections E2. and E5. of this Tariff. (N)

E26.3.3 Mergers and Acquisitions and Transfer of Service (N)

A. In the event the customer merges with another company or is acquired by another company; the following regulations will apply: (N)

1. The customer may elect to terminate subscription to BellSouth SWA Contract Tariff No. SC2005-01. A customer who cancels subscription to BellSouth SWA Contract Tariff No. SC2005-01 is subject to shortfall and termination liability as described in E26.3.5. following. (N)

2. The customer may not combine revenues with the merged or acquired company's revenues for the purpose of obtaining volume discounts provided under BellSouth SWA Contract Tariff No. SC2005-01. (N)

3. The customer may continue subscribing to BellSouth SWA Contract Tariff No. SC2005-01 for the duration of the term provided that the customer continues the subscription as if it were the same entity that existed prior to the merger or acquisition. (N)

B. If customer requests a transfer of service, pursuant to Transfer of Service regulations in Sections E2. and E6. of this Tariff, the customer's subscription to BellSouth SWA Contract Tariff No. SC2005-01 shall be terminated. (N)

All BellSouth marks contained herein and as set forth in the trademarks and servicemarks section of this Tariff are owned by BellSouth Intellectual Property Corporation.

E26. BELLSOUTH SWA CONTRACT TARIFFS (N)

E26.3 BellSouth SWA Contract Tariff No. SC2005-01 (Cont'd) (N)

E26.3.4 BellSouth SWA Revenue Volume Discounts (N)

A. The year of the customer's Letter of Agreement is defined as twelve (12) consecutive bill periods following the beginning date of the Letter of Agreement. For purposes of calculating the BellSouth SWA volume discounts, month one (1) is the first complete bill period after the beginning date of the Letter of Agreement. For example, if the beginning date of the Letter of Agreement is June 6, 2005 bill period, and the bill period is the twelfth, then month one (1) for purposes of calculating the BellSouth SWA volume discounts will be the July 12, 2005 bill period. (N)

B. The BellSouth SWA Pricing Flexibility volume discounts provided herein will be determined during the first month after the end of the year of the customer's Letter of Agreement. During the second month following the end of the year of the Letter of Agreement, the BellSouth SWA volume discounts will be applied via a credit to the customer's bill. (N)

C. The BellSouth SWA volume discounts are applicable to the BellSouth SWA services as set forth in E26.3.2.H. preceding. (N)

D. The BellSouth SWA volume discounts specified in BellSouth SWA Contract Tariff No. SC2005-01 will not be applied to taxes and nonrecurring BellSouth SWA revenues. (N)

E26.3.5 BellSouth SWA Contract Tariff No. SC2005-01 Volume Discount Plan (N)

A. BellSouth SWA Contract Tariff No. SC2005-01 provides for annual volume discounts based upon annual local switching minutes of use (MOU) above a stated minimum usage achieved, and the Commitment Level and term as defined in the Letter of Agreement. Discounts are achieved in term year when the achieved local switching volume is equal to or above a Commitment Level usage. When equaled or exceeded, discounts are applied to the Commitment Level usage. (N)

B. The Commitment Level usage and the achievable volume discounts associated with the BellSouth SWA services are shown in the table below. Volume discounts are not applicable to any usage levels outside of the MOU usage ranges stated in table below: (N)

Annual Usage Commitment Level and Discounts	
Commitment Level MOUs	**Year 1 Discounts**
> 30M to 60M	0.7%
> 60M to 180M	1.3%
> 180M to 250M	2.7%
> 250M	4.0%

(N)

C. The volume discount received for a given year under BellSouth SWA Contract Tariff No. SC2005-01 is determined by multiplying the eligible BellSouth SWA revenue associated with the Commitment Level usage, times the discount percentage achieved as determined in A. preceding. (N)

The following example demonstrates application of the discount: (N)

Customer Annual Commitment Level – 180M minutes of use (N)

Achieved Volume – 190M minutes of use (N)

Contract Year – first year of a one-year contract (N)

All usage is Local Switching 2 (N)

Local Switching 2 rate - $.006979/minute (N)

From Table – applicable discount is 2.7 percent (N)

Therefore: (N)

Volume Discount = Eligible Revenue X Discount Rate (N)

Volume Discount = (180M minutes X $.006979/minute) X 2.7 percent (N)

Volume Discount = $33,918 (N)

All BellSouth marks contained herein and as set forth in the trademarks and servicemarks section of this Tariff are owned by BellSouth Intellectual Property Corporation.

E26. BELLSOUTH SWA CONTRACT TARIFFS (N)

E26.3 BellSouth SWA Contract Tariff No. SC2005-01 (Cont'd) (N)

E26.3.5 BellSouth SWA Contract Tariff No. SC2005-01 Volume Discount Plan (Cont'd) (N)

D. When the Commitment Level usage volume is not met during the year of the term, a shortfall liability is incurred by the customer. The shortfall usage is equal to the difference in the customer's Commitment Level and the achieved local switching usage volume. The shortfall liability would be equal to the shortfall usage, times the customer's average local switching rate per MOU. The customer's average local switching rate per MOU is equal to revenue generated from the local switching usage rate elements as described in E26.3.2.H. preceding, divided by the achieved local switching usage volume. (N)

The following example demonstrates application of shortfall: (N)

Customer Annual Commitment Level – 180M minutes of use (N)

Achieved Volume – 177M minutes of use (N)

Contract Year – first year of a one-year contract (N)

All usage is Local Switching 2 (N)

Local Switching 2 rate - $.006979/minute (N)

Therefore: (N)

Shortfall Usage = Commitment Level – Achieved Volume (N)

Shortfall Usage = 180M minutes – 177M minutes (N)

Shortfall Usage = 3M minutes (N)

Shortfall Liability = Shortfall Usage X Avg Local Switching Rate (N)

Shortfall Liability = 3M minutes X $.006979/minute (N)

Shortfall Liability = $20,937 (N)

E. In the event of an early termination of the contract, shortfall usage calculations will be based upon the monthly usage values which comprise the annual Commitment Level. If upon comparing the shortened term commitment to the achieved usage level, a shortfall usage is determined to exist, then a shortfall liability is incurred. The shortfall liability will be calculated as described in D. above. (N)

F. This BellSouth SWA Contract Tariff No. SC2005-01 will also provide, as a one-time promotional offer, that the customer may obtain a partial prepayment of the first annual SWA Pricing Flexibility volume discount. To qualify for this prepayment, the customer must subscribe to this plan via a Letter of Agreement (LOA) to begin no later than thirty (30) days after the effective date of the tariff. Using the customer's usage between the commencement of this LOA and December 4, 2005, BellSouth will determine if the customer is on track to earn the discount described at the end of the year of the LOA. If so, BellSouth will calculate by December 15, 2005, the prorated volume discount and remit to the subscriber the prepayment of this pro rata volume discount as soon as practical thereafter. At the end of the year of the LOA, if an annual credit has been earned, the prepayment will be subtracted from this annual volume discount amount. If, at the end of the year, the volume discount has not been earned, then the prepayment shall be returned to BellSouth with interest calculated for the period during which the prepayment was held by the customer (Interest equals prime plus two percent (2%) – the prime interest rate is that rate which is effective at the end of the year of the LOA.). (N)

All BellSouth marks contained herein and as set forth in the trademarks and servicemarks section of this Tariff are owned by BellSouth Intellectual Property Corporation.

E26. BELLSOUTH SWA CONTRACT TARIFFS (N)

E26.4 BellSouth SWA Contract Tariff No. SC2005-02 (N)

E26.4.1 General Regulations (N)

A. The start date of BellSouth SWA Contract Tariff No. SC2005-02 is the first bill period following execution of the Letter of Agreement with the customer. (N)

B. The BellSouth SWA Contract Tariff is a one (1) year agreement that terminates upon completion. (N)

C. The regulations, terms, conditions and volume discounts provided herein shall apply to the customer's applicable BellSouth SWA usage and revenues achieved in the state of South Carolina. (N)

E26.4.2 Subscription Conditions (N)

A. To subscribe to BellSouth SWA Contract Tariff No. SC2005-02, the customer and BellSouth must execute a Letter of Agreement. BellSouth shall provide a Letter of Agreement for the customer to execute. The Letter of Agreement shall contain: (N)

1. BellSouth SWA Contract Tariff No. SC2005-02 tariff reference (N)
2. Start and termination date (N)
3. Customer name and billing address (N)
4. Billing Account Number the credit will be applied (N)
5. Access Customer Name Abbreviations (ACNAs) and Customer Identifications Codes (CICs) to be included in the BellSouth SWA Contract Tariff No. SC2005-02 (N)
6. BellSouth SWA Contract Tariff No. SC2005-02 term (N)
7. Commitment Level Usage (N)
8. Commitment Level 8XX Toll Free Dialing Ten Digit Screening Service Queries

B. To subscribe to BellSouth SWA Contract Tariff No. SC2005-02, the customer must have been a BellSouth SWA customer for the previous twelve (12) months. (N)

C. The customer annual commitment level will be that as stated in the Letter of Agreement. The annual commitment level must be in the ranges as stated in E26.4.5.(B) following. (N)

D. When the customer subscribes to BellSouth SWA Contract Tariff No. SC2005-02, the customer must identify to the Telephone Company, all Access Customer Name Abbreviations (ACNAs) and Carrier Identification Codes (CICs) to be included in BellSouth SWA Contract Tariff No. SC2005-02. (N)

E. The customer must be the billing responsible party for all BellSouth SWA billing elements associated with the ACNAs and CICs included in the Letter of Agreement. However, if the customer becomes the responsible party for additional BellSouth SWA billing elements associated with additional ACNAs and CICs within eleven (11) months after the effective date of this BellSouth SWA Contract Tariff no. SC2005-02, BellSouth will allow the additional ACNAs and CICs to be included. (N)

F. Any additions after the Letter of Agreement is executed will be handled as a merger or acquisition or transfer of service regulations as set forth in E26.4.3 following. (N)

G. A customer subscribing to BellSouth SWA Contract Tariff No. SC2005-02 may not subscribe to any other BellSouth SWA Contract Tariff for the services as set forth in H., following. (N)

H. The following BellSouth SWA services will be used in determining the BellSouth SWA revenues that are eligible to receive the volume discount based on the established local switching usage Commitment Level and SWA 8XX Toll Free Dialing Ten Digit Screening Service. (N)

1. Local Switching (N)

Local Switching 1 (N)

Local Switching 2 (N)

Local Switching 3 (N)

Local Switching 4 (N)

All BellSouth marks contained herein and as set forth in the trademarks and servicemarks section of this Tariff are owned by BellSouth Intellectual Property Corporation.

E26. BELLSOUTH SWA CONTRACT TARIFFS (N)

E26.4 BellSouth SWA Contract Tariff No. SC2005-02 (Cont'd) (N)

E26.4.2 Subscription Conditions (Cont'd) (N)

H. (Cont'd)

2. SWA 8XX Toll Free Dialing Ten Digit Screening Service (N)

-Per Toll Free Dialing Call Utilizing BellSouth SWA 8XX Toll Free Dialing Ten Digit Screening Service with Toll Free Dialing Number Delivery (N)

-Per Toll Free Dialing Call Utilizing BellSouth SWA 8XX Toll Free Dialing Ten Digit Screening Service with Toll Free Dialing Number Delivery for Toll Free Dialing Numbers with Optional and Destination Features (N)

-Per Toll Free Dialing Call Utilizing BellSouth SWA 8XX Toll Free Dialing Ten Digit Screening Service with POTS Number Delivery (N)

-Per Toll Free Dialing Call Utilizing BellSouth SWA 8XX Toll Free Dialing En Digit Screening Service with POTS Number Delivery for Toll Free Dialing Numbers with Optional Complex Feature, i.e., Call Handling and Destination Features (N)

I. A customer may not combine its local switching minutes of use or SWA 8XX Toll Free Dialing Ten Digit Screening Service with another customer, whether an individual, partnership, association or corporation, for the purpose of meeting the established minimum local switching usage, as set forth in E26.4.5.(B). following. For a customer to qualify for this SC2005-02 SWA Contract Tariff, the customer must have at least 170M SWA local switching minutes of use and 60M SWA 8XX Toll Free Dialing Ten Digit Screening Service Queries. (N)

J. The services to which the incentives set forth in this BellSouth SWA Contract Tariff No. SC2005-02 apply, are obtained from Section E6. of this Tariff. BellSouth reserves the right to change the terms, conditions, rates, and charges applicable for services in Section E6. or other sections of this Tariff during the term of this Contract Tariff unless otherwise specified in this Contract Tariff. General regulations and ordering options for the BellSouth SWA services are as set forth in Sections E2. and E5. of this Tariff. (N)

E26.4.3 Mergers and Acquisitions and Transfer of Service (N)

A. In the event the customer merges with another company or is acquired by another company, the following regulations will apply: (N)

1. The customer may not combine Local Switching usage volumes and SWA 8XX Toll Free Dialing Ten Digit Screening Service queries with the merged or acquired company's Local Switching usage volumes and SWA 8XX Toll Free Dialing Ten Digit Screening Service queries for the purpose of obtaining volume discounts provided under BellSouth SWA Contract Tariff No. SC2005-02. (N)

2. The customer may continue subscribing to BellSouth SWA Contract Tariff No. SC2005-02 for the duration of the term provided that the customer continues the subscription as if it were the same entity that existed prior to the merger or acquisition. (N)

B. If customer requests a transfer of service, pursuant to Transfer of Service regulations in Sections E2. and E6. of this Tariff, the customer's subscription to BellSouth SWA Contract Tariff No. SC2005-02 shall be terminated. (N)

E26.4.4 BellSouth SWA Revenue Volume Discounts (N)

A. The year of the customer's Letter of Agreement is defined as twelve (12) consecutive bill periods following the beginning date of the Letter of Agreement. For purposes of calculating the BellSouth SWA volume discounts, month one (1) is the first complete bill period after the beginning date of the Letter of Agreement. For example, if the beginning date of the Letter of Agreement is June 6, 2006 bill period, and the bill period is the twelfth, then month one (1) for purposes of calculating the BellSouth SWA volume discounts will be the July 1, 2006 bill period. (N)

B. The BellSouth SWA Pricing Flexibility volume discounts provided herein will be determined during the first month after the end of the year of the customer's Letter of Agreement. During the second month following the end of the year of the Letter of Agreement, the BellSouth SWA volume discounts will be applied via a credit to the customer's bill. (N)

C. The BellSouth SWA volume discounts are applicable to the BellSouth SWA services as set forth in E26.4.2.H. preceding. (N)

D. The BellSouth SWA volume discounts specified in BellSouth SWA Contract Tariff No. SC2005-02 will not be applied to taxes and nonrecurring BellSouth SWA revenues. (N)

All BellSouth marks contained herein and as set forth in the trademarks and servicemarks section of this Tariff are owned by BellSouth Intellectual Property Corporation.

E26. BELLSOUTH SWA CONTRACT TARIFFS (N)

E26.4 BellSouth SWA Contract Tariff No. SC2005-02 (Cont'd) (N)

E26.4.5 BellSouth SWA Contract Tariff No. SC2005-02 Volume Discount Plan (N)

A. BellSouth SWA Contract Tariff No. SC2005-02 provides for annual volume discounts based upon annual local switching minutes of use (MOU) and annual SWA 8XX Toll Free Dialing Ten Digit Screening Service queries achieved and the Commitment Level and term as defined in the Letter of Agreement. Discounts are achieved in term year when the achieved local switching volume and/or SWA 8XX Toll Free Dialing Ten Digit Screening Service is equal to or above a Commitment Level usage/queries. When equaled or exceeded, discounts are applied to the Commitment Level usage and/or SWA 8XX Toll Free Dialing Ten Digit Screening Service queries. If the customer's achieved volume is below the Commitment Level usage and/or SWA 8XX Toll Free Dialing Ten Digit Screening Service queries, no discounts will be rewarded to the customer. (N)

B. The Commitment Level usage, 8XX Toll Free Dialing Ten Digit Screening Service queries and the achievable volume discounts associated with the BellSouth SWA services are shown in the table below. Volume discounts are not applicable to any usage levels or SWA 8XX Toll Free Dialing Ten Digit Screening Service Queries outside of the MOU usage ranges or SWA 8XX Queries stated in tables below: (N)

Annual Usage Commitment Level and Discounts	
Commitment Level MOUs	**Year 1 Discounts**
> 170M to 250M	2.7%
> 250M	4.0%

(N)

Annual Usage Commitment Level and Discounts	
Commitment Level Queries	**Year 1 Discounts**
> 6M to 7M	7%
> 7M to 8M	10%
> 8M	15%

(N)

C. The volume discount received for a given year under BellSouth SWA Contract Tariff No. SC2005-02 is determined by multiplying the eligible BellSouth SWA revenue associated with the Commitment Level usage, times the discount percentage achieved as determined in A. preceding. (N)

The following example demonstrates application of the discount: (N)

Customer Annual Commitment Level – 180M minutes of use (N)

Achieved Volume – 255M minutes of use (N)

Contract Year – first year of a one-year contract (N)

All usage is Local Switching 2 (N)

Local Switching 2 rate - $.006979/minute (N)

From Table – applicable discount is 2.7 percent (N)

Therefore: (N)

Volume Discount = Eligible Revenue X Discount Rate (N)

Volume Discount = (255M minutes X $.006979/minute) X 2.7 percent (N)

Volume Discount = $48,050 (N)

All BellSouth marks contained herein and as set forth in the trademarks and servicemarks section of this Tariff are owned by BellSouth Intellectual Property Corporation.

E26. BELLSOUTH SWA CONTRACT TARIFFS (N)

E26.4 BellSouth SWA Contract Tariff No. SC2005-02 (Cont'd) (N)

E26.4.5 BellSouth SWA Contract Tariff No. SC2005-02 Volume Discount Plan (Cont'd) (N)

D. The SWA 8XX Toll Free Dialing Ten Digit Screening Service Query volume discount received for a given year under BellSouth SWA Contract Tariff No. SC2005-02 is determined by multiplying the eligible BellSouth SWA 8XX Toll Free Dialing Ten Digit Screening Service queries total billed revenue times the discount percentage achieved as determined in (A) preceding. (N)

The following example demonstrates application of the discount: (N)

Customer Annual Commitment Level – 7.5M queries (N)

Achieved Volume – 8M queries (N)

Contract Year – first year of a one-year contract (N)

Total Billed Revenue 8XX Toll Free Dialing Ten Digit Screening Service query total billed revenue from the contract term = $30,000 (N)

From Table – applicable discount is 7 percent (N)

Therefore: (N)

Volume Discount= Total billed revenue X Discount percent (N)

Volume Discount = ($30,000 X 7 percent) (N)

Volume Discount = $2,100 (N)

E. This BellSouth SWA Contract Tariff No. SC2005-02 will also provide, as a one-time promotional offer, that the customer may obtain a partial prepayment of the first annual SWA Pricing Flexibility volume discount. To qualify for this prepayment, the customer must subscribe to this plan via a Letter of Agreement (LOA) to begin no later than thirty (30) days after the effective date of the tariff. Using the customer's usage between the commencement of this LOA and December 4, 2006, BellSouth will determine if the customer is on track to earn the discount described at the end of the year of the LOA. If so, BellSouth will calculate by December 15, 2006, the prorated volume discount and remit to the subscriber the prepayment of this pro rata volume discount as soon as practical thereafter. At the end of the year of the LOA, if an annual credit has been earned, the prepayment will be subtracted from this annual volume discount amount. If, at the end of the year, the volume discount has not been earned, then the prepayment shall be returned to BellSouth with interest calculated for the period during which the prepayment was held by the customer (Interest equals prime plus two percent (2%) – the prime interest rate is that rate which is effective at the end of the year of the LOA.). (N)

All BellSouth marks contained herein and as set forth in the trademarks and servicemarks section of this Tariff are owned by BellSouth Intellectual Property Corporation.

OFFICIAL APPROVED VERSION, RELEASED BY BSTHQ

E27. RESERVED FOR FUTURE USE (N)

CONTENTS (N)

E27. RESERVED FOR FUTURE USE (N)

E28. RESERVED FOR FUTURE USE (N)

CONTENTS (N)

E28. RESERVED FOR FUTURE USE (N)

E29. OPTICAL TRANSPORT ACCESS SERVICE (N)

CONTENTS (N)

E29.1 BellSouth® Wavelength Service 1 (N)

E29.1.1 General 1 (N)
E29.1.2 Regulations 1 (N)
E29.1.3 Ordering Options and Conditions 2 (N)
E29.1.4 Type of Rates and Charges 2 (N)
E29.1.5 Rate Categories 3 (N)
E29.1.6 Rates and Charges 4 (N)

® BellSouth is a registered trademark of BellSouth Intellectual Property Corporation

E29. OPTICAL TRANSPORT ACCESS SERVICE (N)

E29.1 BellSouth® Wavelength Service (N)

E29.1.1 General (N)

A. BellSouth® Wavelength service provides high volume optical transport in a point-to-point configuration. BellSouth® Wavelength service provides a customer with a solution that provides a transparent optical transport that supports a maximum bandwidth per optical signal. BellSouth® Wavelength service is capable of transporting digital optical signals at industry standard data speeds such as 100 Mbps, 200 Mbps, 270 Mbps, 1.0625 Gbps, 1.25 Gbps and SONET speeds such as 52 Mbps, 155 Mbps, 622 Mbps, 2.5 Gbps. (N)

B. BellSouth® Wavelength service is available in two maximum transmission speeds: 100 Mbps to 1.25 Gbps and 52 Mbps to 2.5 Gbps. The following chart lists the interfaces available and examples of the customer generated digital optical signals that can be transported for each speed: (N)

Bandwidth	Interface to customer (Wavelength in nm)	Type of Fiber at Network Interface	Example Speeds of Customer Generated Digital Signals Transported
100 Mbps to 1.25 Gbps	850 nm	Multimode; 2-fiber interface	100 Mbps, 200 Mbps, 1.0625 Gbps, 1.25 Gbps
52 Mbps to 2.5 Gbps	1310 nm, 1550 nm, Single ITU Grid (up to 1580 nm)	Single Mode; 2-fiber interface	52 Mbps, 100 Mbps, 155 Mbps, 200 Mbps, 270 Mbps, 622 Mbps, 1.0625 Gbps, 1.25 Gbps, 2.5 Gbps

(N)

It is the customer's responsibility to inform BellSouth® which type of interface they require. (N)

C. Electrical interfaces and multiplexing functions are not available with this service. Transport of a customer-generated SONET optical signal is supported; however, SONET functionality is not supported with this service. (N)

D. BellSouth® Wavelength service is furnished where suitable facilities are available as determined by the Company. (N)

E. The technical specifications and customer interfaces for BellSouth® Wavelength service are contained in BellSouth Technical Reference #73630. This publication is available from BellSouth Telecommunications, Inc., Documentation Operations, W5A1, 3535 Colonnade Parkway, Birmingham, Alabama 35243. (N)

E29.1.2 Regulations (N)

A. The regulations, rates and charges specified herein are in addition to other regulations, rates and charges as specified in this tariff. (N)

B. BellSouth® Wavelength service provides transport of digital optical signals only. Analog optical signals are not supported. It is the customer's responsibility to generate the appropriate digital optical signal. (N)

C. BellSouth® Wavelength service will only be provided where both customer locations are within BellSouth territory. (N)

D. Minimum Period (N)

The minimum service period for BellSouth® Wavelength service is four months. (N)

E. BellSouth® Wavelength service is available at month-to-month rates with a four month minimum service period. When a service is discontinued prior to the expiration of the minimum period, all charges are applicable for the remaining portion of the minimum period. Service is also available under a Transport Payment Plan (TPP) as specified in E2.4.9.(C) preceding. (N)

F. Allowance for Interruptions (N)

Allowance for interruptions to service will be in accordance with the provisions set forth in E2.4.4 of this Tariff. (N)

® BellSouth is a registered trademark of BellSouth Intellectual Property Corporation

E29. OPTICAL TRANSPORT ACCESS SERVICE (N)

E29.1 BellSouth® Wavelength Service (Cont'd) (N)

E29.1.3 Ordering Options and Conditions (N)

A. The Access Order, as set forth in Section E5. preceding, is used in the provisioning of BellSouth® Wavelength service. Also included in that section are other charges which may be associated with ordering BellSouth® Wavelength service (e.g., Service Date Change Charges, Cancellation Charges, etc.). (N)

B. A Service Inquiry will be necessary to determine availability of service. A Service Inquiry is a request to the Company to determine if facilities exist to provide the requested service and to determine the service dates on which service can be provided to the customer. (N)

E29.1.4 Type of Rates and Charges (N)

A. Rates and charges are specified in E29.1.6 following for BellSouth® Wavelength service. There are two types of rates and charges – monthly rates and nonrecurring charges. (N)

1. Monthly Rates (N)

   Monthly rates are flat recurring rates that apply each month or fraction thereof that a BellSouth® Wavelength service is provided. For billing purposes, each month is considered to have 30 days. (N)

2. Nonrecurring Charges (N)

   Nonrecurring charges are one-time charges that apply for specific work activity (i.e., installation or change to an existing service). Nonrecurring charges do not apply when rate elements are ordered under TPP arrangements. (N)

   a. Installation of Service (N)

      Nonrecurring charges apply for each service terminated at the customer's premises. (N)

   b. Service Rearrangements (N)

      Service rearrangements are changes to existing (installed) services which do not result in either a change in the minimum period requirements or a change in the physical location of the point of termination at a customer designated premises. Changes which result in the establishment of new minimum period obligations are treated as disconnects and starts. Changes in the physical location of the point of termination are treated as moves and are described and charged for as set forth in B. following. A change which results from a transfer of service is described in (c) following. (N)

      The charge to the customer for the service rearrangement is dependent on whether the change is administrative only in nature or involves actual physical change to the service. (N)

      Administrative changes will be made without charge(s) to the customer. Such changes require the continued provision and billing of the Access Service to the same entity (i.e., customer remains responsible for all outstanding indebtedness for the Access service). Administrative changes are as follows: (N)

      - Change of customer name (i.e., the customer of record does not change but rather the customer of record changes its name – e.g., AT&T-Long Lines to AT&T-Communications), (N)
      - Change of customer or customer's end user premises address when the change of address is not a result of a physical relocation of equipment. (N)
      - Change in billing data (name, address or contact name or telephone number. The customer of record does not change.) (N)
      - Change of jurisdiction. (N)

   c. Transfer of Service (N)

      When a change in billing data (e.g., name, address, contact name, or telephone number is requested in association with a change in the customer of record, transfer of service charges, as set forth in E7.5.13 preceding will apply. Charges are applied on a Billing Account Number (BAN) and per circuit basis. (N)

® BellSouth is a registered trademark of BellSouth Intellectual Property Corporation

E29. OPTICAL TRANSPORT ACCESS SERVICE (N)

E29.1 BellSouth® Wavelength Service (Cont'd) (N)

E29.1.4 Type of Rates and Charges (Cont'd) (N)

B. Moves (N)

1. A move involves a change in the physical location of one of the following: (N)
   a. The point of interface at the customer's premises. (N)
   b. The customer's premises. (N)
2. The charges for the move are dependent on whether the move is to a new location within the same building or to a different building. (N)
   a. Moves Within the Same Building (N)

      When a service is moved to a new location within the same building, the charge for the move will be an amount equal to one-half of the nonrecurring charge for the service termination affected. There will be no change in the minimum period requirements. (N)

   b. Moves To a Different Building (N)

      Moves to a different building will be treated as a discontinuance and start of service and all associated nonrecurring charges will apply. Service will not be available simultaneously at both the original and new customer locations. The customer will remain responsible for satisfying all outstanding minimum period charges for the original service locations. (N)

E29.1.5 Rate Categories (N)

A. Wavelength Channel (N)

This rate category provides a point to point optical transport from customer location A to customer location B. This Wavelength Channel is available in two bandwidths – 100 Mbps to 1.25 Gbps and 52 Mbps to 2.5 Gbps. (N)

A nonrecurring charge and monthly rate applies per Wavelength Channel. (N)

® BellSouth is a registered trademark of BellSouth Intellectual Property Corporation

E29. OPTICAL TRANSPORT ACCESS SERVICE (N)

E29.1 BellSouth® Wavelength Service (Cont'd) (N)

E29.1.6 Rates and Charges (N)

A. Wavelength Channel (N)

1. Per Channel (N)

	Nonrecurring Charge	Month To Month	USOC	
(a) 100 Mbps to 1.25 Gbps	**$3,000.00**	**$20,000.00**	**LWAC1**	(N)
(b) 52 Mbps to 2.5 Gbps	**3,000.00**	**28,000.00**	**LWAC2**	(N)

B. Wavelength Channel (N)

1. Per Channel (N)

	Transport Payment Plan				
	12 to 36 Months	**37 to 60 Months**	**61 to 96 Months**	**USOC**	
(a) 100 Mbps to 1.25 Gbps	**$15,000.00**	**$11,000.00**	**$ 9,000.00**	**LWAC1**	(N)
(b) 52 Mbps to 2.5 Gbps	**22,000.00**	**17,000.00**	**14,000.00**	**LWAC2**	(N)

® BellSouth is a registered trademark of BellSouth Intellectual Property Corporation

E30. RESERVED FOR FUTURE USE (N)

CONTENTS (N)

E30. RESERVED FOR FUTURE USE (N)

E31. RESERVED FOR FUTURE USE (N)

CONTENTS (N)

E31. RESERVED FOR FUTURE USE (N)

OFFICIAL APPROVED VERSION, RELEASED BY BSTHQ

E32. RESERVED FOR FUTURE USE (N)

CONTENTS (N)

E32. RESERVED FOR FUTURE USE (N)

E33. RESERVED FOR FUTURE USE (N)

CONTENTS (N)

E33. RESERVED FOR FUTURE USE (N)

E34. ADVANCED INTELLIGENT NETWORK (AIN) SERVICES (N)

CONTENTS

E34.1 Reserved for Future Use 1 (N)
E34.2 Reserved for Future Use 1 (N)
E34.3 Reserved for Future Use 1 (N)
E34.4 Reserved for Future Use 1 (N)
E34.5 Reserved for Future Use 1 (N)
E34.6 BellSouth® AIN SMS Access Service 1 (N)
E34.6.1 Description of Service 1 (N)
E34.6.2 Definitions 2 (N)
E34.6.3 Regulations 2 (N)
E34.6.4 Application of Rates 3 (N)
E34.6.5 Rates and Charges 4 (N)
E34.7 BellSouth® AIN Toolkit Service 4 (N)
E34.7.1 General 4 (N)
E34.7.2 Definitions 5 (N)
E34.7.3 Regulations 6 (N)
E34.7.4 Restrictions and Limitations 8 (N)
E34.7.5 Monthly Reports and Special Studies 8 (N)
E34.7.6 Rates and Charges 9 (N)

® BellSouth is a registered trademark of BellSouth Corporation

E34. ADVANCED INTELLIGENT NETWORK (AIN) SERVICES (N)

E34.1 Reserved for Future Use (N)

E34.2 Reserved for Future Use (N)

E34.3 Reserved for Future Use (N)

E34.4 Reserved for Future Use (N)

E34.5 Reserved for Future Use (N)

E34.6 BellSouth® AIN SMS Access Service (N)

E34.6.1 Description of Service (N)

A. BellSouth® AIN SMS Access service is an intraLATA service that allows a customer to make changes to their Advanced Intelligent Network (AIN) services. BellSouth® AIN Toolkit service can be controlled in this manner and must be purchased separately from E34.7 following. (N)

BellSouth® AIN SMS Access service provides the capability for a customer to access the AIN Service Management System (SMS) in an efficient and flexible way unaided by BellSouth Telecommunications (BST) personnel or the service order process. Once the customer has accessed the SMS, the customer can modify service subscription information, view service related information and access reports. (N)

BellSouth® AIN SMS Access service supports access security, data security and security based on class of users. Access security requires a security card authentication process, in addition to log-in and password identifiers, for access to the SMS. BellSouth® AIN SMS Access service also ensures that each BellSouth® AIN SMS Access service customer can access only data that belongs to that customer. In addition, the BellSouth® AIN SMS Access service customer controls which portion of data may be accessed by each of the customer's users. This type of security is based on class of users and the customer will select a class for each user. (N)

The SMS keeps a record of system access on a per user basis which includes date, time and log-in identifiers. This information will be available to customers via the report function of BellSouth® AIN SMS Access service. Customers may also view on-line and download AIN service specific reports through BellSouth® AIN SMS Access service. (N)

BellSouth® AIN SMS Access service is only available to customers who subscribe to one or more of the services listed in B. following. (N)

B. BellSouth® AIN Toolkit service, as set forth in E34.7 following, may be controlled using BellSouth® AIN SMS Access service. (N)

C. BellSouth® AIN SMS Access service consists of the following rate elements: (N)

-Service Establishment -Service Charge -Port Connection (N)

-User Identification Codes -Security Card (N)

When used with BellSouth® AIN Toolkit service, BellSouth® AIN SMS Access service also includes Storage and Session. (N)

D. Company Performed Session is an optional rate element for BellSouth® AIN SMS Access service. (N)

E. BellSouth® AIN SMS Access service is accessed via a Dial/Shared Port Connection at a recommended modem speed of 19.2 Kbps or via ISDN. Users may experience occasional blocking due to sharing of access ports. User Identification Codes and Security Cards may be obtained as needed by the customer. (N)

The expected life of the Security Card battery is thirty months. When the battery fails, the customer must purchase a replacement card. (N)

F. Storage is provided by BellSouth® AIN SMS Access service for customer service configuration information. Multiple configurations may be kept on file and may be activated in the AIN by customer command. (N)

® BellSouth is a registered trademark of BellSouth Corporation

E34. ADVANCED INTELLIGENT NETWORK (AIN) SERVICES (N)

E34.6 BellSouth® AIN SMS Access Service (Cont'd) (N)

E34.6.2 Definitions (N)

ADVANCED INTELLIGENT NETWORK (AIN) (N)

The Advanced Intelligent Network (AIN) is an evolutionary telecommunications platform that utilizes the infrastructure of the existing switch-based network and Common Channel Signaling System 7 (CCS7) architecture. The AIN architecture introduces centralized computer devices to host service applications that are integrated with Stored Program Control switch resident software, CCS7 and ISDN protocol. (N)

SERVICE CONTROL POINT (SCP) (N)

The AIN Service Control Point (SCP) is a CCS7 accessed computer device utilized by the AIN to host AIN service applications and store associated customer data. Upon demand, the SCPs respond to queries from the switch network to provide service application and customer/network routing information prior to call completion. (N)

SERVICE MANAGEMENT SYSTEM (SMS) (N)

The Service Management System (SMS) is an AIN Operation Support System that distributes, interfaces and manages the AIN service applications and customer information resident in AIN SCPs and SNs. The SMS provides the capability to provision AIN services and to maintain existing service. (N)

SESSION (N)

A Session is the period of time a customer or the Company is logged onto BellSouth® AIN SMS Access service. The total Session time is measured from log-in to log-out. (N)

STORAGE UNIT (N)

A Storage Unit is a logical collection of physical records which are stored in the SMS in a record size equivalent to 100 Kilobytes (a kilobyte is equal to 1024 bytes). Storage of information in the SMS is utilized for customer service configuration information. (N)

E34.6.3 Regulations (N)

A. BellSouth® AIN SMS Access service is available as an Unbundled Network Element (UNE) to certified Interexchange Carriers (IXCs) and Competitive Local Exchange Carriers (CLECs) where facilities or arrangements permit. (N)

B. Except as noted, BellSouth® AIN SMS Access service is subject to all general regulations applicable to the provisioning of service by the Company as stated in Section E2. of this Tariff. (N)

C. Suspension of Service as specified in Section E2. of this Tariff is not applicable for BellSouth® AIN SMS Access service. (N)

D. BellSouth® AIN SMS Access service customers can only activate and modify AIN service subscription information that has been ordered from the Company. The functions that can be performed are dependent on the specific AIN service that is being controlled via BellSouth® AIN SMS Access service. (N)

E. Each user will be required to have a separate User Identification Code. Each User Identification Code will require a Security Card. (N)

F. ISDN access is required when a BellSouth® AIN SMS Access service customer is also a BellSouth® AIN Toolkit service subscriber. Otherwise, ISDN access is optional. (N)

G. For Dial/Shared access to BellSouth® AIN SMS Access service, the customer will be required to provide a terminal as specified in I.1 following, an asynchronous dial modem capable of speeds up to 19.2 Kbps and an Exchange Access Line at the customer's premises. Further information related to modem standards may be obtained from the Company. (N)

H. For ISDN access to BellSouth® AIN SMS Access service, the customer will be required to provide a terminal as specified in I.2 following, ISDN terminal equipment, and an ISDN equipped access line at the customer's premises. (N)

I. Customer terminal requirements (N)

1. Dial/Shared Access (N)

The type of interface device required at the customer's premises is a VT100 compatible terminal or personal computer equipped with terminal emulation software. The interface device must be compatible with American National Standard Institute (ANSI) standard X3.64. Further information related to interface specifications may be obtained from the Company. (N)

® BellSouth is a registered trademark of BellSouth Corporation

E34. ADVANCED INTELLIGENT NETWORK (AIN) SERVICES (N)

E34.6 BellSouth® AIN SMS Access Service (Cont'd) (N)

E34.6.3 Regulations (Cont'd) (N)

I. Customer terminal requirements (Cont'd) (N)

2. ISDN Access (N)

The type of interface device required at the customer's premises is a PC or workstation with X Windows software and an ISDN terminal interface. Further information related to interface specifications may be obtained from the Company. (N)

J. The customer will be responsible for installation, maintenance and testing of customer provided compatible terminal equipment. The Company does not assume responsibility for the compatibility or suitability of the customer's equipment. (N)

K. The Company shall not be responsible if changes in any of the equipment, operations or procedures of the Company utilized in the provision of BellSouth® AIN SMS Access service render any facilities provided by a customer obsolete or require modification or alteration of such equipment or system or otherwise affect its use or performance. (N)

L. Reports associated with AIN services controlled by BellSouth® AIN SMS Access service may be downloaded using BellSouth® AIN SMS Access service. These reports are purchased from the tariff section which governs the AIN service being controlled. Any restrictions and limitations on the use of the information contained in the reports are described in the tariff for each individual service. BellSouth® AIN Toolkit service, as set forth in E34.7 following, can be controlled using BellSouth® AIN SMS Access service. (N)

E34.6.4 Application of Rates (N)

A. No additional rates and charges (e.g., Service Order Charges) apply to this service except as listed in this section. (N)

B. The Service Establishment charge is for the initial establishment of BellSouth® AIN SMS Access service in the state. (N)

C. The Service Charge is a nonrecurring charge applicable per wire center per AIN service administered by BellSouth® AIN SMS Access service. A service specific Service Charge monthly rate may also apply. (N)

D. A Port Connection charge is applicable for each simultaneous access capability desired by the customer. (N)

E. The User Identification Codes charge is a nonrecurring charge applicable per User ID Code requested by the customer. A Security Card is also needed with each User Identification Code. (N)

F. The Security Card charge is applicable for initial subscription to a User Identification Code or for replacement of the Security Card. (N)

G. Storage charges apply to the amount of storage, measured in units of 100 Kbytes, occupied by a customer's file in the SMS. Storage will be measured on a calendar month and charges for the month will be based on the customer's highest level of storage during the month. For purposes of billing, a partial unit of storage will be rounded up to the nearest unit. (N)

H. Session charges apply when the customer accesses BellSouth® AIN SMS Access service. A Session begins when the customer logs onto the SMS and ends when the customer logs off. BellSouth® AIN SMS Access service sessions will incur per minute of use charges based on the duration of the session. (N)

I. Sessions performed by the Company at the customer's request will incur the Company Performed Session charge. Sessions performed by the Company during service installation or maintenance will not result in any session charges. (N)

® BellSouth is a registered trademark of BellSouth Corporation

E34. ADVANCED INTELLIGENT NETWORK (AIN) SERVICES (N)

E34.6 BellSouth® AIN SMS Access Service (Cont'd) (N)

E34.6.5 Rates and Charges (N)

A. Rate Elements (N)

		Nonrecurring Charge	Monthly Rate	USOC	
1.	Service Establishment (per State)				(N)
	(a) Initial Setup	**$299.57**	**$-**	**CAMSE**	(N)
2.	Port Connection				(N)
	(a) Dial/Shared Access	**88.25**	**-**	**CAMDP**	(N)
	(b) ISDN Access	**88.25**	**-**	**CAM1P**	(N)
3.	User Identification Codes				(N)
	(a) Per User ID Code	**204.50**	**-**	**CAMAU**	(N)
4.	Security Card (per User ID Code)				(N)
	(a) Initial or Replacement	**173.82**	**-**	**CAMRC**	(N)
5.	Storage				(N)
	(a) Per Unit	**-**	**0.0032**	**NA**	(N)

		Charge	USOC	
6.	Session			(N)
	(a) Per Minute	**$0.1084**	**NA**	(N)
7.	Company Performed Session			(N)
	(a) Per Minute	**2.09**	**NA**	(N)

E34.7 BellSouth® AIN Toolkit Service (N)

E34.7.1 General (N)

A. BellSouth® AIN Toolkit allows subscribers to access call information and AIN processing capabilities to create customized telephone services according to the needs of the subscriber/end user. (N)

Subscribers will create services by using a set of tools (i.e., a Service Creation Environment) that allows them to configure the AIN capabilities. After a service has been created, it is verified by the Service Management System (SMS) for completeness. The verified service is provisioned on the AIN network elements of the Public Switched Telephone Network and may be activated or deactivated at the subscriber's discretion. (N)

A subscriber's created service will require the provisioning of triggers. The triggers available for BellSouth® AIN Toolkit service subscribers include the following: (N)

-Terminating Attempt	-10-digit Public Office Dialing Plan (PODP)	-Customized Dialing Plan (CDP)	(N)
-Off-hook Delay	-Off-hook Immediate	-Feature Code	(N)

B. Access to the Service Creation Environment which is used by BellSouth® AIN Toolkit service subscribers will be through the use of BellSouth® AIN SMS Access service. The use of BellSouth® AIN SMS Access service is mandatory for all BellSouth® AIN Toolkit service subscribers. BellSouth® AIN SMS Access service may be purchased from E34.6 preceding. (N)

C. BellSouth® AIN Toolkit service subscribers will have access only to those services and information related to those services that they have created. The BellSouth® AIN Toolkit service subscriber may allow multiple users to access the BellSouth® AIN Toolkit service subscription capabilities. (N)

D. The BellSouth® AIN Toolkit service subscriber will have access to all of the available nodes in the BellSouth® AIN Toolkit service to create Decision Graphs (DG). All nodes may be used in any one DG. The DGs are created using the Decision Graph Editor (DGE) of the Service Creation Environment (SCE). (N)

® BellSouth is a registered trademark of BellSouth Corporation

E34. ADVANCED INTELLIGENT NETWORK (AIN) SERVICES (N)

E34.7 BellSouth® AIN Toolkit Service (Cont'd) (N)

E34.7.2 Definitions (N)

ADVANCED INTELLIGENT NETWORK (AIN) (N)

The Advanced Intelligent Network (AIN) is an evolutionary telecommunications platform that utilizes the infrastructure of the existing switch based network and Common Channel Signaling System 7 (CCS7) architecture. The AIN architecture introduces centralized computer devices to host service applications that are integrated with Stored Program Control switch resident software, CCS7 and Integrated Services Digital Network (ISDN) protocol. (N)

BASIC MESSAGING ELEMENT (N)

A basic messaging element is the inquiry sent to a network element database and the instructions returned to complete the call processing. (N)

CREATED SERVICE (N)

A BellSouth® AIN Toolkit created service is a complete and correctly formed decision graph that has been created by the BellSouth® AIN Toolkit service subscriber by assembling nodes and inputting that capability data required by those nodes. (N)

DECISION GRAPH (N)

A decision graph depicts a created service as nodes assembled into a tree graph. Traversal of this tree graph from the root to the leaves indicates the series of capabilities (shown as nodes) that will be executed in the processing of a call. Decision graphs are created, read, updated, and modified using decision graph editor software. (N)

DIRECTORY NUMBER (DN) (N)

A Directory Number is a telephone number in the North American Numbering Plan (NANP) format. The DN types that can be used for BellSouth® AIN Toolkit service are: (N)

- Equipped DN is a DN that has physical line equipment associated with it. (N)
- Unequipped DN is a DN that has no physical line equipment associated with it. (N)

END USER (N)

An end user is the entity that uses the service that is created by the BellSouth® AIN Toolkit service subscriber. (N)

NODE (N)

A node is a part of a decision graph capable of performing a certain function. (N)

SERVICE CONTROL POINT (SCP) (N)

The AIN Service Control Point (SCP) is a CCS7 accessed computer device utilized by the AIN to host AIN service applications and store associated customer data. Upon demand, the SCPs respond to inquires from the switch network to provide service application and customer routing information prior to call completion. (N)

SERVICE CREATION ENVIRONMENT (SCE) (N)

The Service Creation Environment (SCE) is a set of computer based tools that can be used to provide customer programmability. It allows the BellSouth® AIN Toolkit service subscriber to design, edit, verify, and deploy the service in the network. (N)

SERVICE MANAGEMENT SYSTEM (SMS) (N)

The Service Management System (SMS) is an AIN Operation Support System that distributes, interfaces, and manages the AIN service applications and customer information resident in AIN SCPs. The SMS provides the capability to provision AIN services and to maintain existing services. (N)

SUBSCRIBER (N)

The BellSouth® AIN Toolkit service subscriber is the authorized entity that orders, pays for and uses the service creation environment of the BellSouth® AIN Toolkit Platform to create services on its own behalf or on behalf of the end user. (N)

® BellSouth is a registered trademark of BellSouth Corporation

E34. ADVANCED INTELLIGENT NETWORK (AIN) SERVICES

E34.7 BellSouth® AIN Toolkit Service (Cont'd)

E34.7.2 Definitions (Cont'd)

SUBSCRIPTION

The subscription is a DN plus its assigned trigger(s). A subscription is created by making a Decision Graph and associating it with a set of subscription-specific data.

TRIGGER

Triggers are interruptions in the processing of AIN calls which instruct the switch to query a network element database for further instructions to complete call processing.

E34.7.3 Regulations

A. BellSouth® AIN Toolkit service is available as an Unbundled Network Element (UNE) to certified Interexchange Carriers (IXCs) and Competitive Local Exchange Carriers (CLECs) where facilities or arrangements permit.

B. Limitations and use of service as stated in Section E2. of this Tariff will apply.

C. Suspension of service, as defined in Section E2. of this Tariff, is not applicable for this service.

D. In no event shall the Company be liable for any losses or damages of any kind resulting from the unavailability of its equipment of facilities or for any act, omission, or failure of performance by the Company or its employees, or agents, in connection with this Tariff. The Company shall not be responsible for calls that can not be completed as a result of repair or maintenance difficulties on Company facilities and equipment nor on equipment owned or leased by the BellSouth® AIN Toolkit service subscriber.

E. The use of the Off-Hook Immediate trigger, which directs a call immediately to the location selected by the BellSouth® AIN Toolkit service subscriber, affects the end-user's ability to dial 911 or E911 from the end user's telephone. It is the responsibility of the BellSouth® AIN Toolkit subscriber to notify its end users of this to insure that end users are aware that they may not be able to reach 911 or E911 in an emergency, without some further action on the part of the BellSouth® AIN Toolkit subscriber. (N)

F. When BellSouth® AIN Toolkit service is interrupted due to a failure or malfunction of Company equipment or facilities, a pro rata adjustment of the appropriate monthly charges will be allowed at the request of the BellSouth® AIN Toolkit service subscriber if the system is unavailable to the subscriber and the Company (to perform changes for the subscriber) for more than a 24 hour period and in accordance with the regulations specified in Section E2. of this Tariff. No allowances will be granted for interruptions required to perform preventive or routine maintenance, or to perform software updates when the subscriber is notified at least 24 hours prior to such occurrences. (T)

G. The BellSouth® AIN Toolkit service subscriber will be responsible for installation, maintenance and testing of customer provided compatible terminal equipment. The Company does not assume responsibility for the compatibility or suitability of the customer's equipment. (T)

H. The BellSouth® AIN Toolkit service subscriber shall subscribe to adequate facilities to transport the calls to the subscriber locations. (T)

I. The Company shall not be responsible if changes in any of the equipment, operations, or procedures of the Company utilized in the provision of BellSouth® AIN Toolkit service render any facilities provided by a subscriber obsolete or require modification or alteration of such equipment or system or otherwise affect its use or performance. (T)

J. BellSouth® AIN Toolkit service requires the use of storage space on the SMS. BellSouth® AIN SMS Access service rates and regulations, as set forth in E34.6 preceding, will apply for BellSouth® AIN Toolkit service. (T)

K. A BellSouth® AIN Toolkit service subscriber may be temporarily authorized by an end user to create services using the end user's DN(s). (T)

L. End User Authorization (T)

1. If requested by the Company, BellSouth® AIN Toolkit service subscribers that create services on behalf of end users must provide proof of authorization to alter the provisioning associated with those end users' DNs.
2. End users can revoke their authorization at any time by informing the BellSouth® AIN Toolkit service subscriber of their decision. If an end user requests removal of a trigger, the end user will be referred to the BellSouth® AIN Toolkit service subscriber.
3. The Company will not become involved in disputes between a BellSouth® AIN Toolkit service subscriber and a subscriber's end users. The end user will be referred to the BellSouth® AIN Toolkit service subscriber for resolution of any disagreement.
4. BellSouth® AIN Toolkit service subscribers that create services using DNs that they have acquired in bulk service orders need not provide authorization to alter the provisioning associated with those DNs.

® BellSouth is a registered trademark of BellSouth Intellectual Property Corporation

E34. ADVANCED INTELLIGENT NETWORK (AIN) SERVICES

E34.7 BellSouth® AIN Toolkit Service (Cont'd)

E34.7.3 Regulations (Cont'd)

M. Triggers (T)

1. Triggers must be activated within 90 calendar days from the order date. Additionally, deactivated triggers must be reactivated within 90 calendar days from the deactivation date. Triggers not activated/reactivated within the 90 day period will be considered available for provisioning to another subscriber or to the same subscriber. Nonrecurring Trigger Access charges will apply for reprovisioning of triggers to the original subscriber.
2. The BellSouth® AIN Toolkit service subscriber must select the trigger(s) associated with each DN.
3. Triggers can be provisioned only on Company DNs.
4. A DN may have multiple BellSouth® AIN Toolkit triggers active in the network concurrently.
5. A BellSouth® AIN Toolkit service end user can not have more than one AIN service for the same trigger type. This restriction applies whether or not the conflicting AIN service is a BellSouth® AIN Toolkit created service.
6. A service order must be issued to add or delete a trigger.
7. In order to activate a BellSouth® AIN Toolkit service, the BellSouth® AIN Toolkit service subscriber must associate each DN plus a trigger with a decision graph.
8. The Off-hook Delay, Off-hook Immediate, and CDP triggers can not be provisioned on the same DN.

N. The BellSouth® AIN Toolkit service subscriber may allow the end user to make changes in SMS. (T)

O. The BellSouth® AIN Toolkit service subscriber/end user must select an Interexchange Carrier to do interLATA routing of calls. The Interexchange Carrier may be selected by presubscription, by dialing 101XXXX, or by having it specified by the BellSouth® AIN Toolkit service. (T)

P. Security regulations, as set forth in BellSouth® AIN SMS Access service, E34.6 preceding, will apply to BellSouth® AIN Toolkit service. (T)

Q. The BellSouth® AIN Toolkit service subscriber may allow end users of the BellSouth® AIN Toolkit created service to access subscription data. The type of interface required at the end user's premises is a VT-100 terminal or PC emulating the VT-100 terminal. The interface device must be a modem with a transmission rate of 19.2 Kbps or less. The BellSouth® AIN Toolkit service subscriber will be required to subscribe to a User ID Code and Security Card, per the BellSouth® AIN SMS Access service, as set forth in E34.6 preceding, per end user with access to the BellSouth® AIN Toolkit created service subscription data. (T)

R. Decision Graphs (T)

1. The size of the Decision Graphs (DGs) is limited. Information regarding the maximum number of nodes which can be included in a decision graph will be provided to the subscriber at the time BellSouth® AIN Toolkit is purchased.
2. After a DG is created, it must be verified by the BellSouth® AIN Toolkit service subscriber and the SMS.
3. After the DG has been verified, the BellSouth® AIN Toolkit -created service can be activated. Decision graphs may also be deactivated when the BellSouth® AIN Toolkit service subscriber no longer requires the created service.
4. DG changes that require switch translation modifications require a service order.
5. A DG which is causing harm to the network and/or service problems can be deactivated by the Company. In such instances, the BellSouth® AIN Toolkit service subscriber will be informed of the deactivation and will be provided such information as may be available concerning the cause of the problem.
6. Modifications to the DG can be made by Company personnel only when authorized by the BellSouth® AIN Toolkit service subscriber.
7. A DN may have multiple DGs active in the network, where each service uses a different trigger type.
8. Multiple DGs may exist in the SMS for a single trigger on a DN but only one DG may be active at a time.

S. If the BellSouth® AIN Toolkit service subscriber desires to receive Calling Party Number (CPN) or ANI information on a real time basis, they may subscribe to an appropriate service for that information. (T)

® BellSouth is a registered trademark of BellSouth Intellectual Property Corporation

E34. ADVANCED INTELLIGENT NETWORK (AIN) SERVICES

E34.7 BellSouth® AIN Toolkit Service (Cont'd)

E34.7.3 Regulations (Cont'd)

T. When CPN is delivered to the BellSouth® AIN Toolkit service subscriber for use in service provisioning, the status of the privacy indicator will also be delivered. It is solely the responsibility of the BellSouth® AIN Toolkit service subscriber to handle this information properly and in accordance with the rules, regulations, and laws of the jurisdiction in which the subscriber is doing business. The Company is not liable for any impropriety in the BellSouth® AIN Toolkit service subscriber's handling of CPN information. The Company's only responsibility is to insure that the privacy indicator is delivered to the subscriber with the CPN if the privacy indicator has been set. (T)

U. Telephone numbers listed in any of the BellSouth® AIN Toolkit service optional call reports are intended solely for use by the BellSouth® AIN Toolkit service subscriber and/or end user. Resale of this information, other than by the subscriber to the end user, is prohibited by this Tariff. (T)

V. The Company may invoke call gapping as may be necessary for maintenance purposes or to maintain the quality of service in the network. If call gapping is invoked specifically on a BellSouth® AIN Toolkit service subscriber's service, the Company will notify the subscriber as to the reasons this step was required and what measures may be necessary to avoid future recurrence. However, if call gapping is invoked in the network or portion of the network, the subscriber will not be individually notified. (T)

W. BellSouth® AIN Toolkit service requires storage space on the SCP. This storage is measured in kilobytes. (T)

E34.7.4 Restrictions and Limitations

A. An 800 service number can be used as a point-to number for BellSouth® AIN Toolkit service.

B. On any individual directory number, each trigger can only be associated with one AIN service.

C. Certain combinations of triggers cannot be active simultaneously on a directory number. Information regarding such conflicts will be provided to the subscriber at the time BellSouth® AIN Toolkit is purchased.

D. If a BellSouth® AIN Toolkit service subscriber also subscribes to BCLID, the SCP provided number shall be delivered to the subscriber.

E34.7.5 Monthly Reports and Special Studies

A. BellSouth® AIN Toolkit service Monthly Report

1. The BellSouth® AIN Toolkit service subscriber may subscribe to a report for BellSouth® AIN Toolkit service on a monthly basis. This monthly report may consist of:
   - Number of recorded call attempts to a BellSouth® AIN Toolkit service subscription
   - Number of geographic node lookups per BellSouth® AIN Toolkit service subscription (only if the geographic node is used)
   - The value of the counters for the defined period of time (only if counter incremental nodes are used)
   - Number of times each announcement ID is played (only if announce and collect or terminating announcement nodes are used)
   - Number of calls routed to each terminating number
2. The BellSouth® AIN Toolkit service Monthly Report is provided per BellSouth® AIN Toolkit service subscription.

B. BellSouth® AIN Toolkit service Special Study

1. The BellSouth® AIN Toolkit service subscriber may request a BellSouth® AIN Toolkit service Special Study at any time after the BellSouth® AIN Toolkit service has been activated. A BellSouth® AIN Toolkit service Special Study contains the same information as the BellSouth® AIN Toolkit service Monthly Report except that the Special Study is conducted over a limited amount of time. The special study interval must be a minimum of five days and a maximum of thirty-one days and must begin at 12:01 A.M., and it cannot span more than one calendar month.
2. The BellSouth® AIN Toolkit service subscriber must request a BellSouth® AIN Toolkit service Special Study through the service ordering process.
3. The BellSouth® AIN Toolkit service subscriber to the BellSouth® AIN Toolkit service Monthly Report or to the BellSouth® AIN Toolkit service Special Study, but cannot subscribe to both during the same period of time.

® BellSouth is a registered trademark of BellSouth Intellectual Property Corporation

E34. ADVANCED INTELLIGENT NETWORK (AIN) SERVICES

E34.7 BellSouth® AIN Toolkit Service (Cont'd) (N)

E34.7.5 Monthly Reports and Special Studies (Cont'd) (N)

C. BellSouth® AIN Toolkit service Call Event Report (N)

1. The BellSouth® AIN Toolkit service subscriber may subscribe to a BellSouth® AIN Toolkit service Call Event Report on a monthly basis. The contents of this report may include parameters such as: (N)
   - The calling telephone number, the terminating telephone number, date, time, and duration of the call, and if the call was busy or ring-no answer. (N)
2. The BellSouth® AIN Toolkit service Call Event Report is provided per BellSouth® AIN Toolkit service subscription. (N)

D. BellSouth® AIN Toolkit service Call Event Special Study (N)

1. The BellSouth® AIN Toolkit service subscriber may request a BellSouth® AIN Toolkit service Call Event Special Study at any time after the BellSouth® AIN Toolkit service has been activated. A BellSouth® AIN Toolkit service Special Study contains the same information as the BellSouth® AIN Toolkit service Call Event Information Report except that the Special Study is conducted over a limited amount of time. The special study interval must be a minimum of five days and a maximum of thirty-one days and must begin at 12:01 A.M., and it can not span more than one calendar month. (N)
2. The BellSouth® AIN Toolkit service subscriber must request a BellSouth® AIN Toolkit service Call Event Special Study through the service ordering process. (N)
3. The BellSouth® AIN Toolkit service subscriber may subscribe to the BellSouth® AIN Toolkit service Call Event Report or to the BellSouth® AIN Toolkit service Call Event Special Study, but can not subscribe to both during the same period of time. (N)

E. The BellSouth® AIN Toolkit service Monthly Report, the BellSouth® AIN Toolkit service Special Study, the BellSouth® AIN Toolkit service Call Event Report, and the BellSouth® AIN Toolkit service Call Event Special Study are not represented as provision of billing detail. (N)

F. The BellSouth® AIN Toolkit service Monthly Report and BellSouth® AIN Toolkit service Call Event Report are provided through BellSouth® AIN SMS Access service. The BellSouth® AIN Toolkit service Special Study and the BellSouth® AIN Toolkit service Call Event Special Study will be provided on diskette. (N)

E34.7.6 Rates and Charges (N)

A. Application of Rates (N)

1. No additional rates and charges (e.g., Service Order Charges) apply to this service except as listed in B. following. (N)
2. The Nonrecurring BellSouth® AIN Toolkit service Charge is for the establishment of BellSouth® AIN Toolkit service per State. (N)
3. The nonrecurring charge for trigger access applies per trigger per DN. (N)
4. A charge will apply for each basic messaging element. Some calls to the BellSouth® AIN Toolkit-created service may incur multiple basic messaging element charges. (N)

® BellSouth is a registered trademark of BellSouth Corporation

E34. ADVANCED INTELLIGENT NETWORK (AIN) SERVICES (N)

E34.7 BellSouth® AIN Toolkit Service (Cont'd) (N)

E34.7.6 Rates and Charges (Cont'd) (N)

A. Application of Rates (Cont'd) (N)

5. Application of the BellSouth® AIN Toolkit node charge (N)
   a. For Type I nodes, the BellSouth® AIN Toolkit node charge applies per trigger per basic messaging element per BellSouth® AIN Toolkit service subscription. Nodes in DGs that are active for part of a day are billed for the whole day. (N)
   b. Type I nodes are: (N)
      (1) Announcement Node (N)
      (2) Announce and Collect Node (N)
      (3) Geographic Decision Node (N)
      (4) LATA Decision Node (N)
      (5) Writes to Flexible Table (N)
      (6) Log Events Node (N)
6. Storage charges apply to the amount of SCP storage occupied by a BellSouth® AIN Toolkit service subscriber's files. This storage is measured monthly; the rate is applied per 100 kilobytes (or fraction thereof) per LATA. Storage is accumulated per BellSouth® AIN SMS Access service account. (N)
7. A Nonrecurring Charge and Monthly Rate apply for BellSouth® AIN Toolkit service Monthly Report if the subscriber selects this service option. (N)
8. A Nonrecurring Charge applies to each BellSouth® AIN Toolkit service Special Study requested by the subscriber. (N)
9. A Nonrecurring Charge and Monthly Rate apply for the BellSouth® AIN Toolkit service Call Event Report if the subscriber selects this service option. (N)
10. A Nonrecurring Charge applies to each BellSouth® AIN Toolkit service Call Event Special Study requested by the subscriber. (N)
11. A Nonrecurring Charge and Monthly Rate apply for the BellSouth® AIN Toolkit service Call Detail Information if the subscriber selects this service option. (N)

® BellSouth is a registered trademark of BellSouth Corporation

E34. ADVANCED INTELLIGENT NETWORK (AIN) SERVICES (N)

E34.7 BellSouth® AIN Toolkit Service (Cont'd) (N)

E34.7.6 Rates and Charges (Cont'd) (N)

B. Rates (N)

		Nonrecurring Charge	Monthly Rate	USOC	
1.	Service Establishment Charge (Per state)				(N)
	(a) Initial Setup	**$294.76**	**$-**	**BAPSC**	(N)
2.	Training Session				(N)
	(a) Per Customer	**8381.00**	**-**	**BAPVX**	(N)
3.	Trigger Access Charge (Per trigger, per DN)				(N)
	(a) Terminating Attempt	**73.81**	**-**	**BAPTT**	(N)
	(b) Off-hook Delay	**73.81**	**-**	**BAPTD**	(N)
	(c) Off-hook Immediate	**73.81**	**-**	**BAPTM**	(N)
	(d) 10-digit PODP	**151.98**	**-**	**BAPTO**	(N)
	(e) CDP	**151.98**	**-**	**BAPTC**	(N)
	(f) Feature Code	**151.98**	**-**	**BAPTF**	(N)

		Rate	USOC	
4.	Basic Messaging Element Charge			(N)
	(a) Per basic messaging element	**$0.0287**	**NA**	(N)
5.	Type I Node Charge (per BellSouth® AIN Toolkit service subscription)			(N)
	(a) Per node, per basic messaging element	**0.0072**	**NA**	(N)
6.	SCP Storage Charge (per BellSouth® AIN SMS Access service account)			(N)
	(a) Per 100 kilobytes (or fraction thereof)	**1.99**	**NA**	(N)

		Nonrecurring Charge	Monthly Rate	USOC	
7.	Monthly Report				(N)
	(a) Per BellSouth® AIN Toolkit service subscription	**$73.00**	**$16.03**	**BAPMS**	(N)
8.	Special Study				(N)
	(a) Per BellSouth® AIN Toolkit service subscription	**47.85**	**-**	**BAPLS**	(N)
9.	Call Event Report				(N)
	(a) Per BellSouth® AIN Toolkit service subscription	**73.00**	**15.94**	**BAPDS**	(N)
10.	Call Event Special Study				(N)
	(a) Per BellSouth® AIN Toolkit service subscription	**47.85**	**-**	**BAPES**	(N)

® BellSouth is a registered trademark of BellSouth Corporation

E100. RESERVED FOR FUTURE USE (N)

E101. RESERVED FOR FUTURE USE (N)

E102. RESERVED FOR FUTURE USE (N)

E103. RESERVED FOR FUTURE USE (N)

E104. RESERVED FOR FUTURE USE (N)

E105. RESERVED FOR FUTURE USE (N)

E106. RESERVED FOR FUTURE USE (N)

OBSOLETE SERVICE OFFERING – SPECIAL ACCESS (A.K.A. BELLSOUTH SPA) SERVICE (N)

CONTENTS (N)

E107.1	**Reserved For Future Use**	1	(N)
E107.2	**Reserved For Future Use**	1	(N)
E107.3	**Reserved For Future Use**	1	(N)
E107.4	**Reserved For Future Use**	1	(N)
E107.5	**Rates And Charges**	2	(N)
E107.5.1	Reserved For Future Use	2	(N)
E107.5.2	Reserved For Future Use	3	(N)
E107.5.3	Reserved For Future Use	4	(N)
E107.5.4	Reserved For Future Use	5	(N)
E107.5.5	Reserved For Future Use	6	(N)
E107.5.6	High Capacity (a.k.a. BellSouth SPA High Capacity) Service	7	(N)

E107. OBSOLETE SERVICE OFFERINGS - SPECIAL ACCESS (A.K.A. BELLSOUTH SPA) SERVICE (N)

E107.1 Reserved For Future Use (N)

E107.2 Reserved For Future Use (N)

E107.3 Reserved For Future Use (N)

E107.4 Reserved For Future Use (N)

E107. OBSOLETE SERVICE OFFERINGS - SPECIAL ACCESS (A.K.A. BELLSOUTH SPA) SERVICE (N)

E107.5 Reserved For Future Use (N)

E107.5.1 Reserved For Future Use (N)

E107. OBSOLETE SERVICE OFFERINGS - SPECIAL ACCESS (A.K.A. BELLSOUTH SPA) SERVICE (N)

E107.5 Reserved For Future Use (Cont'd) (N)

E107.5.2 Reserved For Future Use (N)

E107. OBSOLETE SERVICE OFFERINGS - SPECIAL ACCESS (A.K.A. BELLSOUTH SPA) SERVICE (N)

E107.5 Reserved For Future Use (Cont'd) (N)

E107.5.3 Reserved For Future Use (N)

E107. OBSOLETE SERVICE OFFERINGS - SPECIAL ACCESS (A.K.A. BELLSOUTH SPA) SERVICE (N)

E107.5 Reserved For Future Use (Cont'd) (N)

E107.5.4 Reserved For Future Use (N)

E107. OBSOLETE SERVICE OFFERINGS - SPECIAL ACCESS (A.K.A. BELLSOUTH SPA) SERVICE (N)

E107.5 Reserved For Future Use (Cont'd) (N)

E107.5.5 Reserved For Future Use (N)

E107. OBSOLETE SERVICE OFFERINGS - SPECIAL ACCESS (A.K.A. BELLSOUTH SPA) SERVICE (N)

E107.5 Reserved For Future Use (Cont'd) (N)

E107.5.6 High Capacity (a.k.a. BellSouth SPA High Capacity) Service (N)

A. Local Channel (N)

1. Reserved For Future Use (N)
2. Contract Rates Per Point Of Termination (N)

(Obsoleted 1/2/02, Type 4) Rates not available for renewals, new installations or moves of service to a different premises. Upon completion of the existing commitment period, customers may select a new commitment period at the current rates or revert to current rates on a month-to-month basis. Customers may rearrange existing service at the same premises. (N)

For High Capacity (a.k.a. BellSouth SPA High Capacity) service orders completed prior to January 2, 2002, and administered under provisions of the Channel Services Payment Plan (CSPP), Local Channels furnished between the customer's premises and its normal Serving Wire Center will be charged for as specified following. (N)

		Monthly Rate						
		24-48 Months	49-72 Months	73-96 Months	Nonrecurring Charge First	Nonrecurring Charge Additional	USOC	
(a)	1.544 Mbps – Zone 1	**$121.00**	**$120.00**	**$119.00**	**$675.00**	**$310.00**	**TMECS**	(O)
(b)	1.544 Mbps – Zone 2	**121.00**	**120.00**	**119.00**	**675.00**	**310.00**	**TMECS**	(O)
(c)	1.544 Mbps – Zone 3	**121.00**	**120.00**	**119.00**	**675.00**	**310.00**	**TMECS**	(O)

E107. OBSOLETE SERVICE OFFERINGS – SPECIAL ACCESS (A.K.A. BELLSOUTH SPA) SERVICE

E107.5 Rates and Charges (Cont'd) (N)

E107.5.7 Reserved For Future Use (N)

E107. OBSOLETE SERVICE OFFERINGS – SPECIAL ACCESS (A.K.A. BELLSOUTH SPA) SERVICE

E107.5 Rates and Charges (Cont'd) (N)

E107.5.8 Reserved For Future Use (N)

E107. OBSOLETE SERVICE OFFERINGS – SPECIAL ACCESS (A.K.A. BELLSOUTH SPA) SERVICE

E107.5 Rates and Charges (Cont'd) (N)

E107.5.9 Reserved For Future Use (N)

E107. OBSOLETE SERVICE OFFERINGS – SPECIAL ACCESS (A.K.A. BELLSOUTH SPA) SERVICE

E107.5 Rates and Charges (Cont'd) (N)

E107.5.10 Reserved For Future Use (N)

E107. OBSOLETE SERVICE OFFERINGS – SPECIAL ACCESS (A.K.A. BELLSOUTH SPA) SERVICE

E107.5 Rates and Charges (Cont'd) (N)

E107.5.11 Reserved For Future Use (N)

E107. OBSOLETE SERVICE OFFERINGS – SPECIAL ACCESS (A.K.A. BELLSOUTH SPA) SERVICE

E107.5 Rates and Charges (Cont'd) (N)

E107.5.12 Reserved For Future Use (N)

E107. OBSOLETE SERVICE OFFERINGS – SPECIAL ACCESS (A.K.A. BELLSOUTH SPA) SERVICE

E107.5 Rates and Charges (Cont'd) (N)

E107.5.13 Reserved For Future Use (N)

E107. OBSOLETE SERVICE OFFERINGS – SPECIAL ACCESS (A.K.A. BELLSOUTH SPA) SERVICE

E107.5 Rates and Charges (Cont'd) (N)

E107.5.14 Reserved For Future Use (N)

E107. OBSOLETE SERVICE OFFERINGS – SPECIAL ACCESS (A.K.A. BELLSOUTH SPA) SERVICE

E107.5 Rates and Charges (Cont'd) (N)

E107.5.15 Reserved For Future Use (N)

E107. OBSOLETE SERVICE OFFERINGS – SPECIAL ACCESS (A.K.A. BELLSOUTH SPA) SERVICE

E107.5 Rates and Charges (Cont'd)

E107.5.16 FlexServ® service (a.k.a. BellSouth SPA Customer Reconfiguration) (N)

A. Reserved For Future Use (N)

B. Reserved For Future Use (N)

C. Basic FlexServ® service (a.k.a. BellSouth SPA Customer Reconfiguration) – Contract Options (N)

(Obsoleted 1/2/02, Type 4) Rates not available for renewals, new installations or moves of service to a different premises. Upon completion of the existing commitment period, customers may select a new commitment period at the current rates in section E7.5.16 or revert to current rates on a month-to-month basis. (N)

1. DS0 Channel Connections (O)

	Monthly Rate 24-48 Months[1]	49-72 Months[1]	73-96 Months[1]	USOC	
(a) Voice Grade Type, per DS0 channel	**$12.00**	**$11.25**	**$10.50**	**DSLVA**	(O)
(b) Digital Type, per DS0 channel	**5.00**	**4.70**	**4.40**	**DSLDA**	(O)
2. DS1 Channel Connections					(O)
(a) DS0 Switching, per DS1 channel	**75.00**	**70.00**	**65.00**	**DSL1A**	(O)
(b) DS1 Switching, per DS1 channel	**42.00**	**39.00**	**37.00**	**DSL1B**	(O)

D. FlexServ® service (a.k.a. BellSouth SPA Customer Reconfiguration) Options – Contract Options (N)

(Obsoleted 1/2/02, Type 4) Rates not available for renewals, new installations or moves of service to a different premises. Upon completion of the existing commitment period, customers may select a new commitment period at the current rates in section E7.5.16 or revert to current rates on a month-to-month basis. (N)

1. Multipoint Bridging (O)

(a) Voice Grade Connections, per bridging leg	**3.50**	**3.40**	**3.30**	**FSSFM**	(O)
(b) Multipoint Junction Unit, per 2.4, 4.8, 9.6 or 56 Kbps channel (must purchase in units of 5)	**4.50**	**4.25**	**4.00**	**FSSFJ**	(O)
2. Subrate Reconfiguration Capability					(O)
(b) 9.6 Kbps, per DS0A requires 5	**$6.75**	**$6.35**	**$5.95**	**DSLS9**	(O)
(c) 4.8 Kbps, per DS0A requires 10	**6.40**	**6.05**	**5.70**	**DSLS4**	(O)
(d) 2.4 Kbps, per DS0A requires 20	**6.00**	**5.65**	**5.30**	**DSLS2**	(O)

Note 1: Rates are applicable for service orders completed prior to January 2, 2002 and administered under the provisions of the Channel Services Payment Plan (CSPP). (N)

® Registered Service Mark of BellSouth Intellectual Property Corporation

E108. RESERVED FOR FUTURE USE (N)

E109. RESERVED FOR FUTURE USE (N)

E110. RESERVED FOR FUTURE USE (N)

E111. RESERVED FOR FUTURE USE (N)

E112. RESERVED FOR FUTURE USE (N)

E113. OBSOLETE SERVICE OFFERINGS - ADDITIONAL ENGINEERING, ADDITIONAL LABOR AND MISCELLANEOUS CHARGES (N)

E113.1 Reserved for Future Use (N)

E113.2 Reserved for Future Use (N)

E113.3 Miscellaneous Charges (O)(T)

E113.3.1 Reserved for Future Use (N)

E113.3.2 Restoration Priority (O)(T)

(Obsoleted 01-15-91) Not offered in connection with new service or changes in existing service on and after 01-15-91. Restoration Priority will remain in this Tariff until March 10, 1993 when it will be removed as a service offering. Restoration Priority has been replaced by Telecommunications Service Priority (TSP) System Service in E13.3.9 for qualifying customers). (N)

A. The Company will arrange a Special Access Service for Restoration Priority on receipt of certification in conformance with Part 64, Subpart D, Appendix A of the Federal Communication Commission's Rules and Regulations. (O)

1. A charge applies when a request to provide or change a Restoration Priority is received subsequent to the issuance of an Access Order to install the service. No charge applies when a Restoration Priority is discontinued. (O)

		Nonrecurring Charge	USOC	
(a)	Restoration Priority, per service arranged	**$104.02**	-	(O)

E126. OBSOLETE SERVICE OFFERING - BELLSOUTH SWA CONTRACT TARIFFS (N)

(N)

CONTENTS

E126.1	**BellSouth SWA Contract Tariff No. SC2002-01**	1	(N)
E126.1.1	General Regulations	1	(N)
E126.1.2	Subscription Conditions	1	(N)
E126.1.3	Mergers and Acquisitions and Transfer of Service	2	(N)
E126.1.4	BellSouth SWA Revenue Volume Discounts	2	(N)
E126.1.5	BellSouth SWA Contract Tariff No. SC2002-01 Volume Discount Plan	3	(N)

All BellSouth marks contained herein and as set forth in the trademarks and servicemarks section of this Tariff are owned by BellSouth Intellectual Property Corporation.

E126. OBSOLETE SERVICE OFFERING - BELLSOUTH SWA CONTRACT TARIFFS (N)

E126.1 BellSouth SWA Contract Tariff No. SC2002-01 (O)(T)

(Obsoleted 2-24-04, Type 4) Not available for new contrats or renewal after the effective date of the tariff. (N)

E126.1.1 General Regulations (O)(T)

A. The start date of BellSouth SWA Contract Tariff No. SC2002-01 is the first bill period following subscription to this contract tariff. (O)

B. BellSouth SWA Contract Tariff No. SC2002-01 shall terminate on August 12, 2007. (O)

C. The regulations, terms, conditions and volume discounts provided herein shall apply to the customer's applicable BellSouth SWA usage and revenues achieved in the sate of South Carolina. (O)

D. A customer that is similarly situated may subscribe within a period of thirty (30) days following the effective date of BellSouth SWA Contract Tariff No. SC2002-01. (O)

E126.1.2 Subscription Conditions (O)(T)

A. To subscribe to BellSouth SWA Contract Tariff No. SC2002-01, the customer and the Company must execute a Letter of Agreement. The Company shall provide a Letter of Agreement for the customer to execute. The Letter of Agreement shall contain: (O)

1. BellSouth SWA Contract Tariff Number (O)
2. Start and termination date of BellSouth SWA Contract Tariff (O)
3. Customer's Name and Billing Address (O)
4. Billing Account Number the credit will be applied (O)
5. Access Customer Name Abbreviations (ACNAs) and Customer Identifications Codes (CICs) to be included in the BellSouth SWA Contract Tariff (O)
6. BellSouth SWA Contract Tariff term (i.e., 36, 48 or 60 months) (O)
7. Minimum Usage Discount Table (O)

B. To subscribe to BellSouth SWA Contract Tariff No. SC2002-01, the customer must have been a BellSouth SWA customer for the previous 18-months. (O)

C. When the customer subscribes to BellSouth SWA Contract Tariff No. SC2002-01, the customer must identify to the Company, all Access Customer Name Abbreviations (ACNAs) and Carrier Identification Codes (CICs) to be included in BellSouth SWA Contract Tariff No. SC2002-01. (O)

D. The customer must be the billing responsible party for all BellSouth SWA billing elements associated with the ACNAs and CICs included in BellSouth SWA Contract No. SC2002-01. (O)

E. Any additions after the Letter of Agreement is executed will be handled as a merger or acquisition or transfer of service regulations as set forth in ***E126.1.3*** following. (O)(T)

F. A customer subscribing to BellSouth SWA Contract Tariff No. SC2002-01 may not subscribe to any other BellSouth SWA Contract Tariff that contains services as set forth in G. following. (O)

G. The following BellSouth SWA services will be used in determining the BellSouth SWA revenues that are eligible to receive the volume discount based on the established minimum local switching usage. (O)

1. BellSouth SWA Common Transport Service (O)
   - Facility Termination, per minute of use (O)
   - Per Mile, per minute of use (O)
   - DS3 to DS1 Multiplexer, per minute of use (O)
   - DS1 to VG Multiplexer, per minute of use (O)
2. Access Tandem Switching (O)
   - Dedicated Tandem Trunk Port Service (O)
     - Per DSO/VG trunk port required (O)
     - Per DS1 trunk port required (O)
   - DS1 to VG Channelization (O)

All BellSouth marks contained herein and as set forth in the trademarks and servicemarks section of this Tariff are owned by BellSouth Intellectual Property Corporation.

E126. OBSOLETE SERVICE OFFERING - BELLSOUTH SWA CONTRACT TARIFFS (N)

E126.1 BellSouth SWA Contract Tariff No. SC2002-01 (Cont'd) (O)(T)

E126.1.2 Subscription Conditions (Cont'd) (O)(T)

G. (Cont'd) (O)

3. Local Switching (O)

Local Switching 1 (O)

Local Switching 2 (O)

Local Switching 3 (O)

Local Switching 4 (O)

Common Trunk Port Service (O)

Per each Common Transport trunk termination, per minute of use (O)

Dedicated End Office Trunk Port Service (O)

Per DSO/VG trunk port required (O)

Per DS1 trunk port required (O)

H. A customer may not combine its local switching minutes of use with another customer, whether an individual, partnership, association or corporation, for the purpose of meeting the established minimum local switching usage, as set forth in ***E126.1.5.B***. following. (O)(T)

I. Cancellation of BellSouth SWA Contract Tariff No. SC2002-01 (O)

1. During the term period of BellSouth SWA Contract Tariff No. SC2002-01, a customer may cancel BellSouth Contract Tariff No. SC2002-01 and subsequently subscribe to another BellSouth SWA Contract Tariff only one time. (O)

2. Cancellation of BellSouth SWA Contract Tariff No. SC2002-01 and subscription to another BellSouth SWA Contract Tariff is allowed only on the anniversary date of BellSouth SWA Contract Tariff No. SC2002-01 and upon meeting one of the following conditions: (O)

a. During the first year of BellSouth SWA Contract Tariff No. SC2002-01, the local switching usage achieved is 10 percent below the minimum usage; (O)

b. During the remaining years of BellSouth SWA Contract Tariff No. SC2002-01, the local switching usage is below the minimum usage. (O)

c. Local switching usage exceeds the discount usage cap. (O)

d. Customer adds CIC codes that are desired to become part of the volume discount contract tariff. (O)

J. Rates and charges for the BellSouth SWA services included in BellSouth SWA Contract Tariff No. SC2002-01 are as set forth in Section E6. of this Tariff. General regulations and ordering options for the BellSouth SWA services are as set forth in Sections E2. and E5. of this Tariff. (O)

E126.1.3 Mergers and Acquisitions and Transfer of Service (O)(T)

A. In the event the customer merges with another company or is acquired by another company; the following regulations will apply: (O)

1. The customer may elect to terminate subscription to BellSouth SWA Contract Tariff No. SC2002-01. (O)

2. The customer may not combine revenues with the merged or acquired company's revenues for the purpose of obtaining volume discounts provided under BellSouth SWA Contract Tariff No. SC2002-01. (O)

3. The customer may continue subscribing to BellSouth SWA Contract Tariff No. SC2002-01 for the duration of the contract term provided that the customer continues the subscription as if it were the same entity that existed prior to the merger or acquisition. (O)

B. If customer requests a transfer of service, pursuant to Transfer of Service regulations in Sections E2. and E6. of this Tariff, the customer's subscription to BellSouth SWA Contract Tariff No. SC2002-01 shall be terminated. (O)

All BellSouth marks contained herein and as set forth in the trademarks and servicemarks section of this Tariff are owned by BellSouth Intellectual Property Corporation.

E126. OBSOLETE SERVICE OFFERING - BELLSOUTH SWA CONTRACT TARIFFS (N)

E126.1 BellSouth SWA Contract Tariff No. SC2002-01 (Cont'd) (O)(T)

E126.1.4 BellSouth SWA Revenue Volume Discounts (O)(T)

A. Each year of BellSouth SWA Contract Tariff No. SC2002-01 is defined as twelve (12) consecutive bill periods. For purposes of calculating the BellSouth SWA volume discounts, month 1 is the bill period after the beginning date of BellSouth SWA Contract Tariff No. SC2002-01. For example, if the beginning date of BellSouth SWA Contract Tariff No. SC2002-01 is June 6, 2002 bill period, then month 1 for purposes of calculating the BellSouth SWA volume discounts will be the July 6, 2002 bill period. (O)

B. The BellSouth SWA volume discounts provided herein will be determined during the first month after the end of each year of the BellSouth SWA Contract Tariff No. SC2002-01. During the second month following the end of each year of the BellSouth SWA Contract Tariff No. SC2002-01, the BellSouth SWA volume discounts will be applied via a credit to the customer's bill. (O)

C. True-up provisions will be made during the first quarter after the termination date of BellSouth SWA Contract No. SC2002-01. (O)

D. The BellSouth SWA volume discounts are applicable to the usage sensitive and recurring revenues of the BellSouth SWA services as set forth in ***E126.1.2.G***. preceding. (O)(T)

E. The BellSouth SWA volume discounts specified in BellSouth SWA Contract Tariff No. SC2002-01 will not be applied to taxes and nonrecurring BellSouth SWA revenues. (O)

F. The BellSouth SWA services to which the volume discounts provided under BellSouth SWA Contract Tariff No. SC2002-01 apply shall only be subject to service assurance warranty regulations specified in E2.4.4 of this Tariff. (O)

E126.1.5 BellSouth SWA Contract Tariff No. SC2002-01 Volume Discount Plan (O)(T)

A. BellSouth SWA Contract Tariff No. SC2002-01 provides for annual volume discounts based upon annual local switching minutes of use (MOU) above a stated minimum usage. Annual volume discounts will be determined by the local switching usage volume and the year of the contract in which the local switching usage volume is achieved. (O)

B. The minimum usage and the achievable volume discounts associated with the BellSouth SWA services are shown in the table below. Volume discounts are not applicable to any usage levels outside of the MOU usage ranges stated in table below: (O)

Minimum Usage (MOU)	Usage Ranges (MOU)	Volume Discount Percentages					(O)
		Year 1	Year 2	Year 3	Year 4	Year 5	(O)
200,443,406	200,443,406 – 204,452,275	7%	-	-	-	-	(O)
	>204,452,275 – 220,487,747	10%	15%	20%	-	-	(O)
	>220,487,747 – 260,576,428	15%	20%	25%	30%	35%	(O)

C. The annual local switching usage included in BellSouth SWA Contract Tariff No. SC2002-01 eligible for volume discount is determined by subtracting the minimum usage from the achieved local switching usage for each year. (O)

D. Dividing the annual local switching usage eligible for volume discount for a given year of BellSouth SWA Contract Tariff No. SC2002-01 by the minimum local switching usage will develop the usage factor. (O)

E. A usage factor (greater than zero) will be applied to the eligible BellSouth SWA revenue generated by the BellSouth SWA services identified in ***E126.1.2.G.*** preceding. This calculation produces the annual revenue eligible for discount. (O)(T)

F. The discount percent achieved, as set forth in B. preceding, is based upon the minimum usage required, the usage factor achieved and the term year. (O)

G. The volume discount received for a given year under BellSouth SWA Contract Tariff No. SC2002-01 is determined by multiplying the eligible BellSouth SWA revenue times the discount factor achieved. (O)

All BellSouth marks contained herein and as set forth in the trademarks and servicemarks section of this Tariff are owned by BellSouth Intellectual Property Corporation.

E126. OBSOLETE SERVICE OFFERING - BELLSOUTH SWA CONTRACT TARIFFS (N)

E126.1 BellSouth SWA Contract Tariff No. SC2002-01 (Cont'd) (O)(T)

E126.1.5 BellSouth SWA Contract Tariff No. SC2002-01 Volume Discount Plan (Cont'd) (O)(T)

H. Following is an example of how the annual BellSouth SWA volume discount will be determined. (O)

BellSouth SWA Contract Tariff Volume Discount Calculation (O)

Customer Information (O)

Customer subscribed to a five year BellSouth SWA Contract Tariff and is in the 4th year of the contract term. The customer's local switching minimum usage is 5,000,000,000 minutes of use. The annual local switching usage for year 4 is 5,750,000,000 minutes of use and the eligible BellSouth SWA revenues for year 4 is $25,000,000. (O)

Year 4 Usage Eligible for Discount = Year 4 Usage - Minimum Usage (O)

= 5.75B MOU - 5B MOU (O)

= 750M MOU (O)

$$\text{Year 4 Usage Factor} = \frac{\text{Year 4 Annual Usage}}{\text{Minimum Usage}}$$ (O)

$$= \frac{\text{750M MOU}}{\text{5B MOU}}$$ (O)

= .15 (O)

Year 4 Revenue Eligible for Discount = Year 4 Usage Factor X Year 4 eligible BellSouth SWA Revenue (O)

= .15 X $25,000,000 (O)

= $3,750,000 (O)

Year 4 Volume Discount = Year 4 Revenue Eligible for Discount X Discount Factor (O)

= $3,750,000 X .30 (O)

= $1,125,000 (O)

All BellSouth marks contained herein and as set forth in the trademarks and servicemarks section of this Tariff are owned by BellSouth Intellectual Property Corporation.