COMPETITIVE ACCESS SERVICES TARIFF

within the operating territory of

Qwest Communications Company, LLC d/b/a CenturyLink QCC

whether offered under that name, or the trade or brand name CenturyLink

in the State of

SOUTH CAROLINA

This tariff contains regulations and rates for Competitive Access Services furnished within the state of South Carolina

Effective April 1, 2011, Qwest Communications Company, LLC registered the fictitious name CenturyLink QCC. Effective August 8, 2011, Qwest Communications Company, LLC began operating under the name CenturyLink QCC. As such, Qwest Communications Company, LLC d/b/a CenturyLink QCC hereby adopts, ratifies, and makes its own, in every respect as if the same had been originally filed by it, all schedules, rules, notices, concurrences, schedule agreements, divisions, authorities or other instruments whatsoever, filed with the South Carolina Public Service Commission, State of South Carolina, by or adopted by Qwest Communications Company, LLC as of August 8, 2011.

By this notice, Qwest Communications Company, LLC d/b/a CenturyLink QCC also adopts and ratifies all supplements or amendments to any of the above schedules, etc., which Qwest Communications Company, LLC has heretofore filed with said Commission.

CHECK SHEET

Pages of this tariff listed below are effective as of the date shown at the bottom of the respective Page(s). Original and revised pages as named below comprise all changes from the original tariff and are currently in effect as of the date on the bottom of this page.

PAGE	NUMBER OF REVISION EXCEPT AS INDICATED	PAGE	NUMBER OF REVISION EXCEPT AS INDICATED	PAGE	NUMBER OF REVISION EXCEPT AS INDICATED
Title	Original *	Section 2		Section 2	
		Index 1	Original *	25	Original *
Check Sheets		Index 2	Original *	26	Original *
1	Original *	1	Original *	27	Original *
2	Original *	2	Original *	28	Original *
		3	Original *	29	Original *
Section 1		4	Original *	30	Original *
Index 1	Original *	5	Original *	31	Original *
1	Original *	6	Original *	32	Original *
2	Original *	7	Original *	33	Original *
3	Original *	8	Original *	34	Original *
4	Original *	9	Original *	35	Original *
5	Original *	10	Original *	36	Original *
6	Original *	11	Original *	37	Original *
7	Original *	12	Original *	38	Original *
8	Original *	13	Original *	39	Original *
9	Original *	14	Original *	40	Original *
10	Original *	15	Original *	41	Original *
11	Original *	16	Original *	42	Original *
12	Original *	17	Original *	43	Original *
		18	Original *	44	Original *
		19	Original *	45	Original *
		20	Original *	46	Original *
		21	Original *	47	Original *
		22	Original *	48	Original *
		23	Original *	49	Original *
		24	Original *		

*INDICATES A REVISION EFFECTIVE AS OF THE EFFECTIVE DATE OF THIS PAGE.

CHECK SHEET (Cont'd)

PAGE	NUMBER OF REVISION EXCEPT AS INDICATED	PAGE	NUMBER OF REVISION EXCEPT AS INDICATED	PAGE	NUMBER OF REVISION EXCEPT AS INDICATED
Section 3		Section 6		Section 6	
Index 1	Original *	Index 1	Original *	16	Original *
1	Original *	Index 2	Original *	17	Original *
2	Original *	1	Original *	18	Original *
3	Original *	2	Original *	19	Original *
		3	Original *	20	Original *
Section 4		4	Original *	21	Original *
Index 1	Original *	5	Original *	22	Original *
1	Original *	6	Original *	23	Original *
		7	Original *	24	Original *
Section 5		8	Original *	25	Original *
Index 1	Original *	9	Original *	26	Original *
1	Original *	10	Original *	27	Original *
2	Original *	11	Original *	28	Original *
3	Original *	12	Original *	29	Original *
		13	Original *	30	Original *
		14	Original *		
		15	Original *		

*INDICATES A REVISION EFFECTIVE AS OF THE EFFECTIVE DATE OF THIS PAGE.

COMPETITIVE ACCESS SERVICES TARIFF

1. APPLICATION AND REFERENCE

SUBJECT	PAGE
Application of Tariff	1
Explanation of Abbreviations	11
Explanation of Change Symbols	10
Table of Contents	2
Tariff Format	8

COMPETITIVE ACCESS SERVICES TARIFF

1. APPLICATION AND REFERENCE

1.1 APPLICATION OF TARIFF

This Tariff contains regulations, terms, conditions, rates and charges applicable to the provision of Switched Access Services, hereinafter referred to collectively as service(s), provided by CenturyLink, hereinafter referred to as the Company. The Company's services are furnished subject to the availability of facilities and connectivity between the Company and Customer and subject to the terms and conditions of this tariff. A Carrier Identification Code (CIC) must be obtained before customers can purchase Switched Access Service for resale.

The tariffed and regulated services offered herein by Qwest Communications Corporation d/b/a CenturyLink , whether under that name or the trade or brand name CenturyLink, are subject to the terms and conditions of this Tariff. The provision of such services by the Company as set forth in this Tariff does not constitute a joint undertaking with the customer for the furnishing of any service.

1. APPLICATION AND REFERENCE

1.2 TABLE OF CONTENTS

PAGE

SECTION 1. APPLICATION AND REFERENCE

1.1	APPLICATION OF TARIFF	1
1.2	TABLE OF CONTENTS	2
1.3	TARIFF FORMAT	8
1.3.1	LOCATION OF MATERIAL	8
1.3.2	OUTLINE STRUCTURE	8
1.3.3	RATE TABLES	9
1.4	EXPLANATION OF CHANGE SYMBOLS	10
1.5	EXPLANATION OF ABBREVIATIONS	11

SECTION 2. GENERAL REGULATIONS

2.1	UNDERTAKING OF THE COMPANY	1
2.1.1	SCOPE	1
2.1.2	LIMITATIONS	2
2.1.3	LIABILITY	3
2.1.4	PROVISION OF SERVICES	5
2.1.5	INSTALLATION AND TERMINATION OF SERVICES	5
2.1.6	MAINTAINING SERVICES	5
2.1.7	CHANGES AND SUBSTITUTIONS	6
2.1.8	REFUSAL AND DISCONTINUANCE OF SERVICE	6
2.1.9	NOTIFICATION OF SERVICE-AFFECTING ACTIVITIES	6
2.1.10	COORDINATION WITH RESPECT TO NETWORK CONTINGENCIES	7
2.1.11	PROVISION AND OWNERSHIP OF TELEPHONE NUMBERS	7
2.1.12	SPECIAL TAXES, FEES, CHARGES	7
2.2	USE	8
2.2.1	INTERFERENCE OR IMPAIRMENT AND UNLAWFUL USE	8

1. APPLICATION AND REFERENCE

1.2 TABLE OF CONTENTS (Cont'd)

		PAGE
2.3	OBLIGATIONS OF THE CUSTOMER	9
2.3.1	DAMAGES	9
2.3.2	OWNERSHIP OF FACILITIES AND THEFT	9
2.3.3	EQUIPMENT SPACE AND POWER	9
2.3.4	AVAILABILITY FOR TESTING	10
2.3.5	DESIGN OF CUSTOMER SERVICES	10
2.3.6	REFERENCES TO THE COMPANY	10
2.3.7	CLAIMS AND DEMANDS FOR DAMAGES	11
2.3.8	COORDINATION WITH RESPECT TO NETWORK CONTINGENCIES	11
2.3.9	JURISDICTIONAL REPORT REQUIREMENTS	12
2.3.10	DETERMINATION OF INTRASTATE CHARGES FOR MIXED INTERSTATE AND INTRASTATE ACCESS SERVICE	20
2.4	PAYMENT ARRANGEMENTS AND CREDIT ALLOWANCES	22
2.4.1	PAYMENT OF RATES, CHARGES AND DEPOSITS	22
2.4.2	MINIMUM PERIODS	29
2.4.3	CANCELLATION OF AN ORDER FOR SERVICE	29
2.4.4	CANCELLATION FOR CAUSE	29
2.4.5	CREDIT ALLOWANCE FOR SERVICE INTERRUPTIONS	30
2.4.6	REESTABLISHMENT OF SERVICE FOLLOWING FIRE, FLOOD OR OTHER OCCURRENCE	32
2.4.7	TITLE OR OWNERSHIP RIGHTS	33
2.4.8	ORDERING, RATING AND BILLING OF ACCESS SERVICES WHERE MORE THAN ONE COMPANY IS INVOLVED	34
2.5	CONNECTIONS	39
2.5.1	GENERAL	39
2.6	DEFINITIONS	40

1. APPLICATION AND REFERENCE

1.2 TABLE OF CONTENTS (Cont'd)

PAGE

SECTION 3. CARRIER COMMON LINE ACCESS SERVICE

3.1 GENERAL DESCRIPTION 1

3.2 LIMITATIONS 1

3.2.1 EXCLUSIONS 1
3.2.2 ACCESS GROUPS 1

3.3 UNDERTAKING OF THE COMPANY 1

3.3.1 PROVISION OF SERVICE 1
3.3.2 INTERSTATE AND INTRASTATE USAGE 1

3.4 OBLIGATIONS OF THE CUSTOMER 2

3.4.1 SWITCHED ACCESS SERVICE REQUIREMENT 2
3.4.2 SUPERVISION 2

3.5 DETERMINATION OF USAGE SUBJECT TO CARRIER COMMON LINE ACCESS RATES 2

3.5.1 DETERMINATION OF JURISDICTION 2
3.5.2 SWITCHED ACCESS SERVICE PROVIDED IN CONJUNCTION WITH A COMMERCIAL MOBILE RADIO SERVICE PROVIDER 2

3.6 RATE REGULATIONS 3

3.6.1 BILLING OF RATES 3
3.6.2 PERCENT INTERSTATE USE (PIU) 3
3.6.3 DETERMINATION OF RATES 3

3.7 RATES AND CHARGES 3

3.7.1 CARRIER COMMON LINE 3

1. APPLICATION AND REFERENCE

1.2 TABLE OF CONTENTS (Cont'd)

PAGE

SECTION 4. INDIVIDUAL CASE BASIS ARRANGEMENTS

4.1 INDIVIDUAL CASE BASIS (ICB) ARRANGEMENTS 1

SECTION 5. ORDERING OPTIONS FOR ACCESS SERVICE

5.1 GENERAL 1

5.1.1 ORDERING CONDITIONS 1

5.2 ACCESS ORDER 1

5.2.1 ACCESS ORDER SERVICE DATE INTERVALS 1
5.2.2 CANCELLATION OF AN ACCESS ORDER 2
5.2.3 MINIMUM PERIOD 3
5.2.4 DISCONTINUANCE OF SERVICE 3

1. APPLICATION AND REFERENCE

1.2 TABLE OF CONTENTS (Cont'd)

PAGE

SECTION 6. SWITCHED ACCESS SERVICE

6.1 GENERAL 1

6.1.1 SWITCHED ACCESS SERVICE ARRANGEMENTS AND MANNER OF PROVISION 2
6.1.2 RATE CATEGORIES 3
6.1.3 ACCEPTANCE TESTING 10
6.1.4 ORDERING OPTIONS AND CONDITIONS 10

6.2 PROVISION AND DESCRIPTION OF SWITCHED ACCESS SERVICE 11

6.2.1 PROVISION OF SWITCHED ACCESS SERVICE 11
6.2.2 DESCRIPTION OF FEATURE GROUP D (FGD) 12

6.3 COMMON SWITCHING OPTIONAL FEATURES 13

6.3.1 AUTOMATIC NUMBER IDENTIFICATION (ANI) 13
6.3.2 SERVICE CLASS ROUTING 14

6.4 TRANSMISSION SPECIFICATIONS 14

6.5 OBLIGATIONS OF THE COMPANY 15

6.5.1 NETWORK MANAGEMENT 15
6.5.2 DESIGN AND TRAFFIC ROUTING OF SWITCHED ACCESS SERVICE 15
6.5.3 PROVISION OF SERVICE PERFORMANCE DATA 16
6.5.4 TRUNK GROUP MEASUREMENT REPORTS 16
6.5.5 DESIGN BLOCKING PROBABILITY 17

1. APPLICATION AND REFERENCE

1.2 TABLE OF CONTENTS (Cont'd)

		PAGE
6.6	OBLIGATIONS OF THE CUSTOMER	18
6.6.1	ORDERING REQUIREMENTS	18
6.6.2	REPORT REQUIREMENTS	18
6.6.3	TRUNK GROUP MEASUREMENT REPORTS	19
6.6.4	DESIGN OF SWITCHED ACCESS SERVICES	19
6.7	RATE TERMS AND CONDITIONS	19
6.7.1	DESCRIPTION AND APPLICATION OF RATES AND CHARGES	19
6.7.2	MINIMUM PERIODS	25
6.7.3	MINIMUM MONTHLY CHARGE	25
6.7.4	MOVES	26
6.7.5	MEASURING ACCESS MINUTES	26
6.7.6	FEATURE GROUP D USAGE MEASUREMENT	27
6.7.7	MILEAGE MEASUREMENT	28
6.8	RATES AND CHARGES	29
6.8.1	SWITCHED RECURRING RATES	29
6.8.2	NONRECURRING RATES	30

1. APPLICATION AND REFERENCE

1.3 TARIFF FORMAT

1.3.1 LOCATION OF MATERIAL

A. Section 1 provides the following for all of the sections in this Tariff:

Table of Contents - A numerical listing to find the desired section and Page.

B. Where appropriate each individual section in the Tariff provides a Subject Index for the material located within that section.

C. Obsolete Service Offerings

Obsolete service offerings are identified in the Tariff by adding 100 to the current section number, i.e., obsolete items from Section 6, Switched Access Service, would be found in Section 106, Obsolete Switched Access Service. This section is then filed behind Section 6.

1.3.2 OUTLINE STRUCTURE

This document uses nine levels of indentations referred to as Tariff Information Management (TIM) Codes, as outlined below:

LEVEL	APPLICATION	EXAMPLE
1	Section Heading	**1. APPLICATION AND REFERENCE**
2	Sub Heading	**1.3 TARIFF FORMAT**
3	Sub Heading	**1.3.1 LOCATION OF MATERIAL**
4	Sub Heading/Text	A. Text
5	Sub Heading/Text	1. Text
6	Sub Heading/Text	a. Text
7	Sub Heading/Text	(1) Text
8	Sub Heading/Text	(a) Text
9	Footnotes	[1] Text

1. APPLICATION AND REFERENCE

1.3 TARIFF FORMAT (Cont'd)

1.3.3 RATE TABLES

Within rate tables, four types of entries are allowed:

- Rate Amount

  The rate amount indicates the dollar value associated with the service.

- A dash "–"

  The dash indicates that there is no rate for the service or that a rate amount is not applicable under the specific column header.

- A footnote designator "[1]"

  The footnote designator indicates that further information is contained in a footnote.

- ICB

  The acronym "ICB" indicates that the product/service is rated on an individual case basis.

1. APPLICATION AND REFERENCE

1.4 EXPLANATION OF CHANGE SYMBOLS

The following symbols will be used to for the purposes indicated below:

SYMBOL	EXPLANATION
(C)	To signify changed regulation,
(D)	To signify discontinued rate or regulation,
(I)	To signify increased rate,
(M)	To signify matter relocated from one Page to another without change,
(N)	To signify new rate, regulation, or text,
(R)	To signify reduced rate,
(S)	To signify reissued matter,
(T)	To signify a change in text but no change in rate or regulation.

1. APPLICATION AND REFERENCE

1.5 EXPLANATION OF ABBREVIATIONS

ac	-	Alternating Current
ANI	-	Automatic Number Identification
AT	-	Access Tandem
ATTP	-	Access Tandem Trunk Port
BP	-	Billing Percentage
CCS	-	One hundred call seconds
CFA	-	Circuit Facility Assignment
CIC	-	Carrier Identification Code
CL	-	Common Line
CMRS	-	Commercial Mobile Radio Service
CN	-	Charge Number
Cont'd	-	Continued
CPN	-	Calling Party Number
dc	-	Direct current
DTT	-	Direct-Trunked Transport
EAS	-	Extended Area Service
EF	-	Entrance Facility
e.g.	-	For example
EO	-	End Office
EOSP	-	End Office Shared Port
etc.	-	Etcetera
EU	-	End User
EXM	-	Exit Message
f	-	Frequency
F.C.C.	-	Federal Communications Commission
H	-	Horizontal
IC	-	Interexchange Carrier
ICB	-	Individual Case Basis
i.e.	-	That is

1. APPLICATION AND REFERENCE

1.5 EXPLANATION OF ABBREVIATIONS (Cont'd)

LATA	-	Local Access and Transport Area
LEC	-	Local Exchange Carrier
LS	-	Local Switching
Mbps	-	Megabits per second
MOU	-	Minutes of Use
MRC	-	Monthly Recurring Charge
MUX	-	Multiplexing
NA	-	Not Applicable
NANP	-	North American Numbering Plan
No.	-	Number
NPA	-	Numbering Plan Area
NRC	-	Nonrecurring Charge
NXX	-	Three-Digit Central Office Code
PIU	-	Percent Interstate Use
POT	-	Point of Termination
QCC	-	Qwest Communications Corporation d/b/a CenturyLink
SS7	-	Signaling System 7
SWC	-	Serving Wire Center
TIM	-	Tariff Information Management
TST	-	Tandem-Switched Transport
TT	-	Tandem Transmission
V	-	Vertical
VG	-	Voice Grade
V & H	-	Vertical & Horizontal
VoIP	-	Voice over Internet Protocol

2. GENERAL REGULATIONS

SUBJECT	PAGE
Availability for Testing	10
Cancellation for Cause	29
Cancellation of an Order for Service	29
Changes and Substitutions	6
Claims and Demands for Damages	11
Connections	39
Coordination With Respect to Network Contingencies	
Undertaking of the Company	7
Obligations of the Customer	11
Credit Allowance for Service Interruptions	30
Damages	9
Definitions	40
Design of Customer Services	10
Determination of Intrastate Charges for Mixed Interstate and Intrastate Access Service	20
Equipment Space and Power	9
Installation and Termination of Services	5
Interference or Impairment and Unlawful Use	8
Jurisdictional Report Requirements	12
Liability	3
Limitations	2
Maintaining Services	5
Minimum Periods	29
Notification of Service-Affecting Activities	6

COMPETITIVE ACCESS SERVICES TARIFF

2. GENERAL REGULATIONS

SUBJECT	PAGE
Obligations of the Customer	9
Ordering, Rating and Billing of Access Services Where More Than One Company is Involved	34
Ownership of Facilities and Theft	9
Payment Arrangements and Credit Allowances	22
Payment of Rates, Charges and Deposits	22
Provision and Ownership of Telephone Numbers	7
Provision of Services	5
Reestablishment of Service Following Fire, Flood or Other Occurrence	32
References to the Company	10
Refusal and Discontinuance of Service	6
Scope	1
Special Taxes, Fees, Charges	7
Title or Ownership Rights	33
Undertaking of the Company	1
Unlawful Use	8
Use	8

2. GENERAL REGULATIONS

2.1 UNDERTAKING OF THE COMPANY

2.1.1 SCOPE

A. The Company does not undertake to transmit messages under this Tariff.

B. The Company shall be responsible only for the installation, operation and maintenance of the services which it provides.

C. The Company will, for maintenance purposes, test its services only to the extent necessary to detect and/or clear troubles.

D. Services are provided 24 hours daily, seven days per week, except as set forth in other applicable sections of this Tariff.

E. The Company does not warrant that its facilities and services meet standards other than those set forth in this Tariff and associated Technical Publications.

2. GENERAL REGULATIONS

2.1 UNDERTAKING OF THE COMPANY (Cont'd)

2.1.2 LIMITATIONS

A. The customer may not assign or transfer the use of services provided under this Tariff; however, where there is no interruption of use or relocation of the services, such assignment or transfer may be made to:

1. Another customer, whether an individual, partnership, association or corporation, provided the assignee or transferee assumes all outstanding indebtedness for such services, and the unexpired portion of the minimum period and the termination liability applicable to such services, if any; or

2. A court-appointed receiver, trustee or other person acting pursuant to law in bankruptcy, receivership, reorganization, insolvency, liquidation or other similar proceedings, provided the assignee or transferee assumes the unexpired portion of the minimum period and the termination liability applicable to such services, if any.

B. In all cases of assignment or transfer, the written acknowledgment of the Company is required prior to such assignment or transfer which acknowledgment shall be made within 15 days from the receipt of notification. All regulations and conditions contained in this Tariff shall apply to such assignee or transferee.

C. The assignment or transfer of services does not relieve or discharge the assignor or transferor from remaining jointly or severally liable with the assignee or transferee for any obligations existing at the time of the assignment or transfer.

D. The assignor or transferor and the assignee or transferee will be required to sign a Transfer of Use Agreement assuming all outstanding indebtedness as set forth in A.1., preceding. In all cases where there is no interruption of use or relocation of the services (i.e., change in Carrier Identification Code (CIC) or any other technical and/or physical change to the service), administrative changes will be made without charge(s).

2. GENERAL REGULATIONS

2.1 UNDERTAKING OF THE COMPANY (Cont'd)

2.1.3 LIABILITY

A. The Company's liability, if any, for its willful misconduct is not limited by this Tariff. With respect to any other claim or suit, by a customer or by any others, for damages associated with the installation, provision, preemption, termination, maintenance, repair or restoration of service, and subject to the provisions of B. through G., following, the Company's liability, if any, shall not exceed an amount equal to the proportionate charge for the service for the period during which the service was affected. This liability for damages shall be in addition to any amounts that may otherwise be due the customer under this Tariff as a Credit Allowance for a Service Interruption.

B. The Company shall not be liable for any act or omission of any customer providing a portion of a service, nor shall the Company for its own act or omission hold liable any customer providing a portion of a service.

C. The Company is not liable for damages to the customer premises resulting from the furnishing of a service, including the installation and removal of equipment and associated wiring, unless the damage is caused by the Company's negligence.

D. The Company shall be indemnified, defended and held harmless by the customer against any claim, loss or damage arising from the customer's use of services offered under this Tariff, involving:

1. Claims for libel, slander, invasion of privacy, or infringement of copyright arising from the customer's own communications;

2. Claims for patent infringement arising from the customer's acts combining or using the service furnished by the Company in connection with facilities or equipment furnished by the customer or;

3. All other claims arising out of any act or omission of the customer in the course of using services provided pursuant to this Tariff.

4. Entering any Company-owned facility housing (e.g., above ground cabinets, underground utility vaults, utility hole, hand hole, etc.) for any purpose.

2. GENERAL REGULATIONS

2.1 UNDERTAKING OF THE COMPANY
2.1.3 LIABILITY (Cont'd)

E. The Company does not guarantee or make any warranty with respect to its services when used in an explosive atmosphere. The Company shall be indemnified, defended and held harmless by the customer from any and all claims by any person relating to such customer's use of services so provided.

F. No license under patents (other than the limited license to use) is granted by the Company or shall be implied or arise by estoppel, with respect to any service offered under this Tariff. The Company will defend the customer against claims of patent infringement arising solely from the use by the customer of services offered under this Tariff and will indemnify such customer for any damages awarded based solely on such claims.

G. The Company's failure to provide or maintain services under this Tariff shall be excused by labor difficulties, governmental orders, civil commotions, criminal actions taken against the Company, acts of God and other circumstances beyond the Company's reasonable control, subject to the Credit Allowance for Service Interruptions as set forth in 2.4.5, following.

2. GENERAL REGULATIONS

2.1 UNDERTAKING OF THE COMPANY (Cont'd)

2.1.4 PROVISION OF SERVICES

The Company, to the extent that such services are or can be made available with reasonable effort, and after provision has been made for the Company's telephone exchange services, will provide to the customer upon reasonable notice services offered in other applicable sections of this Tariff at rates and charges specified therein.

2.1.5 INSTALLATION AND TERMINATION OF SERVICES

The services offered under this Tariff (a) will include the provision of any entrance cable or drop wiring to a location suitable for the termination of the Company's outside distribution network facilities at the customer-designated premises and (b) will be installed by the Company to such Point of Termination (POT). Access Service has only one POT per customer premises. Any additional terminations beyond such POT are the sole responsibility of the customer.

2.1.6 MAINTAINING SERVICES

The services provided under this Tariff shall be maintained by the Company. The customer or others may not rearrange, move, disconnect, remove or attempt to repair any facilities provided by the Company or contained in a Company-owned facility housing (e.g., above ground cabinets, underground utility vaults, utility hole, hand hole, etc.), except with prior written consent and presence of a Company-designated inspector.

2. GENERAL REGULATIONS

2.1 UNDERTAKING OF THE COMPANY (Cont'd)

2.1.7 CHANGES AND SUBSTITUTIONS

A. Except as provided for equipment and systems subject to F.C.C.'s Part 68 Regulations at 47 C.F.R. Section 68.110(b), the Company may, where such action is reasonably required in the operation of its business, (A) substitute, change or rearrange any facilities used in providing service under this Tariff, including but not limited to, (1) substitution of different metallic facilities, (2) substitution of carrier or derived facilities for metallic facilities used to provide other than metallic facilities and (3) substitution of metallic facilities for carrier or derived facilities used to provide other than metallic facilities, (B) change minimum protection criteria, (C) change operating or maintenance characteristics of facilities or (D) change operations or procedures of the Company.

B. In case of any such substitution, change or rearrangement, the transmission parameters will be within the range as set forth in this Tariff and associated Technical Publications. The Company shall not be responsible if any such substitution, change or rearrangement renders any customer furnished services obsolete or requires modification or alteration thereof or otherwise affects their use or performance. If such substitution, change or rearrangement materially affects the operating characteristics of the facility, the Company will provide reasonable notification to the customer. Reasonable time will be allowed for any redesign and implementation required by the change in operating characteristics. The Company will work cooperatively with the customer to determine the reasonable notification requirements.

2.1.8 REFUSAL AND DISCONTINUANCE OF SERVICE

Provisions for the refusal and discontinuance of service are set forth in 2.4.4, following.

2.1.9 NOTIFICATION OF SERVICE-AFFECTING ACTIVITIES

The Company will provide the customer reasonable notification of service-affecting activities that may occur in normal operation of its business. Such activities may include, but are not limited to, equipment or facilities additions, removals or rearrangements, routine preventative maintenance and major switching machine change-out. Generally, such activities are not individual customer service specific, they affect many customer services. No specific advance notification period is applicable to all service activities. The Company will work cooperatively with the customer to determine the reasonable notification requirements.

2. GENERAL REGULATIONS

2.1 UNDERTAKING OF THE COMPANY (Cont'd)

2.1.10 COORDINATION WITH RESPECT TO NETWORK CONTINGENCIES

The Company intends to work cooperatively with the customer to develop network contingency plans in order to maintain maximum network capability following natural or man-made disasters which affect telecommunications services.

2.1.11 PROVISION AND OWNERSHIP OF TELEPHONE NUMBERS

The Company reserves the reasonable right to assign, designate or change telephone numbers, any other call number designations associated with Access Services, or the Company serving central office prefixes associated with such numbers, when necessary in the conduct of its business. Should it become necessary to make a change in such number(s), the Company will furnish to the customer reasonable notice of the effective date and an explanation of the reason(s) and extent for such change(s).

2.1.12 SPECIAL TAXES, FEES, CHARGES

Insofar as practicable, any sales, use, privilege, excise, franchise or occupation tax, costs of furnishing service without charge or similar taxes or impositions now or hereafter levied by the Federal, State, or Local government or any political subdivision or taxing authority thereof may be billed by the Company to its customers on a pro rata basis in the areas wherein such taxes, impositions or other charges shall be levied against the Company.

2. GENERAL REGULATIONS

2.2 USE

2.2.1 INTERFERENCE OR IMPAIRMENT AND UNLAWFUL USE

A. The characteristics and methods of operation of any circuits, facilities or equipment provided by other than the Company and associated with the facilities utilized to provide services under this Tariff shall not interfere with or impair service over any facilities of the Company, its affiliated companies, or its connecting and concurring carriers involved in its services, cause damage to their plant, impair the privacy of any communications carried over their facilities or create hazards to the employees of any of them or the public.

B. Except as provided for equipment or systems subject to the F.C.C.'s Part 68 Rules in 47 C.F.R. Section 68.108, if such characteristics or methods of operation are not in accordance with A., preceding, the Company will, where practicable, notify the customer that temporary discontinuance of the use of a service may be required; however, where prior notice is not practicable, nothing contained herein shall be deemed to preclude the Company's right to temporarily discontinue forthwith the use of a service if such action is reasonable under the circumstances. In case of such temporary discontinuance, the customer will be promptly notified and afforded the opportunity to correct the condition which gave rise to the temporary discontinuance. During such period of temporary discontinuance, Credit Allowance for Service Interruptions as set forth in 2.4.5, following, is not applicable.

C. The services provided under this Tariff shall not be used for any unlawful purpose.

2. GENERAL REGULATIONS

2.3 OBLIGATIONS OF THE CUSTOMER

2.3.1 DAMAGES

The customer shall reimburse the Company for damages to Company facilities for all services utilized to provide services under this Tariff caused by the negligence or willful act of the customer, or resulting from the customer's improper use of the Company facilities, or due to malfunction of any facilities or equipment provided by other than the Company. Nothing in the foregoing provision shall be interpreted to hold one customer liable for another customer's actions. The Company will, upon reimbursement for damages, cooperate with the customer in prosecuting a claim against the person causing such damage and the customer shall be subrogated to the right of recovery by the Company for the damages to the extent of such payment.

2.3.2 OWNERSHIP OF FACILITIES AND THEFT

Facilities utilized by the Company to provide service under the provisions of this Tariff shall remain the property of the Company. Such facilities shall be returned to the Company by the customer, whenever requested, within a reasonable period following the request in as good condition as reasonable wear will permit.

2.3.3 EQUIPMENT SPACE AND POWER

The customer shall furnish or arrange to have furnished to the Company, at no charge, equipment space and electrical power required by the Company to provide services under this Tariff at the POT of such services. The selection of ac or dc power shall be mutually agreed to by the customer and the Company. The customer shall also make necessary arrangements in order that the Company will have access to such spaces at reasonable times for installing, testing, inspecting, repairing or removing Company services.

2. GENERAL REGULATIONS

2.3 OBLIGATIONS OF THE CUSTOMER (Cont'd)

2.3.4 AVAILABILITY FOR TESTING

The services provided under this Tariff shall be available to the Company at times mutually agreed upon in order to permit the Company to make tests and adjustments appropriate for maintaining the services in satisfactory operating condition. Such tests and adjustments shall be completed within a reasonable time. No credit will be allowed for any interruptions involved during such tests and adjustments.

2.3.5 DESIGN OF CUSTOMER SERVICES

Subject to the provisions of 2.1.7, preceding, the customer shall be solely responsible, at its own expense, for the overall design of its services and for any redesigning or rearrangement of its services which may be required because of changes in facilities, operations or procedures of the Company, minimum protection criteria or operating or maintenance characteristics of the facilities.

2.3.6 REFERENCES TO THE COMPANY

The customer may advise end users that certain services are provided by the Company in connection with the service the customer furnishes to end users; however, the customer shall not represent that the Company jointly participates in the customer's services.

2. GENERAL REGULATIONS

2.3 OBLIGATIONS OF THE CUSTOMER (Cont'd)

2.3.7 CLAIMS AND DEMANDS FOR DAMAGES

A. With respect to claims of patent infringement made by third persons, the customer shall defend, indemnify, protect and save harmless the Company from and against all claims arising out of the combining with, or use in connection with, the services provided under this Tariff, any circuit, apparatus, system or method provided by the customer.

B. The customer shall defend, indemnify and save harmless the Company from and against any suits, claims, losses or damages including punitive damages, attorney fees and court costs by third persons arising out of the construction, installation, operation, maintenance, or removal of the customer's circuits, facilities, or equipment connected to the Company's services provided under this Tariff. Included, without limitation, are Workmen's Compensation claims, actions for infringement of copyright and/or unauthorized use of program material. Also included without limitation are libel and slander actions based on the content of communications transmitted over the customer's circuits, facilities or equipment. In addition, proceedings to recover taxes, fines, or penalties for failure of the customer to obtain or maintain in effect any necessary certificates, permits, licenses, or other authority to acquire or operate the services provided under this Tariff shall be included in the indemnification. However, the foregoing indemnification shall not apply to suits, claims, and demands to recover damages for damage to property, death, or personal injury unless such suits, claims or demands are based on the tortuous conduct of the customer, its officers, agents or employees.

C. The customer shall defend, indemnify and save harmless the Company from and against any suits, claims, losses or damages, including punitive damages, attorney fees and court costs by the customer or third parties arising out of any act or omission of the customer in the course of using services provided under this Tariff.

2.3.8 COORDINATION WITH RESPECT TO NETWORK CONTINGENCIES

The customer shall, in cooperation with the Company, coordinate in planning the actions to be taken to maintain maximum network capability following natural or man-made disasters which affect telecommunications services.

2. GENERAL REGULATIONS

2.3 OBLIGATIONS OF THE CUSTOMER (Cont'd)

2.3.9 JURISDICTIONAL REPORT REQUIREMENTS

A. Jurisdictional Determinant

Pursuant to Federal Communications Commission order F.C.C. 85-145 adopted April 16, 1985, interstate usage is to be developed as though every call that enters a customer network at a point within the same state as that in which the called station (as designated by the called station number) is situated is an intrastate communication and every call for which the point of entry is in a state other than that where the called station (as designated by the called station number) is situated is an interstate communication.

To determine the jurisdiction of a call, the Company compares the originating number information with the terminating number information. Traffic without sufficient call detail shall be that traffic for which the originating number information lacks a valid Charge Party Number or Calling Party Number.

When mixed interstate and intrastate Access Service is provided on the same Access Service transmission path, all charges between interstate and intrastate are prorated as set forth in 2.3.10, following.

2. GENERAL REGULATIONS

2.3 OBLIGATIONS OF THE CUSTOMER
2.3.9 JURISDICTIONAL REPORT REQUIREMENTS (Cont'd)

B. Jurisdictional Requirements

The customer must indicate a projected Percent of Interstate Use (PIU) factor in a whole number (i.e., a number 0 - 100) when ordering Switched Access Service in a LATA.

1. Feature Group D (FGD) - Originating Service

When a customer orders FGD Switched Access Service, where the jurisdiction is determined from the call detail, the Company will develop the projected PIU factor according to such jurisdiction. The projected interstate percentage is developed on a monthly basis, by end office, when the originating FGD access minutes are measured, by dividing the measured interstate originating access minutes by the total originating access minutes.

2. Feature Group D (FGD) - Terminating Service

When a customer orders terminating FGD, if the Company has sufficient call details to determine the jurisdiction for the call, the Company will bill the call minutes of use according to that jurisdiction.

When terminating call details are insufficient to determine the jurisdiction for the call, the customer may supply the projected PIU factor by LATA[1]. The projected PIU factor will be used to apportion the terminating call minutes for which call details were insufficient to determine jurisdiction between the interstate and intrastate jurisdictions.

When terminating call details are insufficient to determine the jurisdiction, and the customer does not supply a projected PIU factor by LATA, calls will be billed using a PIU of 50 (50% interstate – 50% intrastate).

[1] When the customer reports a LATA-level PIU factor, the specified percentage applies to all end offices within the LATA.

2. GENERAL REGULATIONS

2.3 OBLIGATIONS OF THE CUSTOMER
2.3.9 JURISDICTIONAL REPORT REQUIREMENTS (Cont'd)

C. Jurisdictional Reports

1. Percent Interstate Use (PIU) Factor

Except where Company measured access minutes are used as set forth in B., preceding, the customer-provided PIU factor will be used until the customer reports a different projected PIU factor based on the following guidelines.

a. The customer may update the PIU factor via jurisdictional report on a quarterly basis. The customer shall report the PIU factor by traffic and service type for each LATA. The customer shall forward to the Company a revised report, to be received no later than fourteen (14) days after the first of January, April, July and October. The revised report shall show the PIU factor for the most current data available, for each service arranged for interstate use. This data shall consist of at least three (3) and no more than twelve (12) consecutive months' of data, ending no more than seventy-five (75) days earlier than the date the report is due (e.g., for the report due January 15th, the last month of data should be no earlier than October 31st). The updated PIU factor shall be based on call detail records. The PIU factor can be based on a statistically valid sample. The PIU factor reported in January, April, July and October will be effective on the bill date of each such month and will serve as the basis for subsequent monthly billing pending the receipt of a revised PIU report.

b. No prorating or back billing will be done based on the jurisdictional report. However, usage will be billed utilizing the interstate percentage that was in effect at the time the usage was generated.

c. The customer shall maintain and retain the work papers that show how the interstate percentage was determined and a summary derived from the actual call detail records for a minimum twelve (12) month period which statistically substantiates each interstate percentage provided to the Company. This summary at a minimum shall include month, year, state, traffic type (e.g., originating, terminating, 8XX, etc.) and service type. The Company may request the work papers and summary in support of the customer's projected PIU factor.

2. GENERAL REGULATIONS

2.3 OBLIGATIONS OF THE CUSTOMER
2.3.9 JURISDICTIONAL REPORT REQUIREMENTS

C.1. (Cont'd)

d. The Company may request the actual call detail records or a statistically valid sample of such records, on a prospective basis, not to exceed a consecutive three-month period. The actual call detail records will be used to statistically substantiate the interstate percentage provided to the Company and the process by which it is developed. Such call detail records shall consist of call information, including call terminating address (i.e., called number), call duration, the trunk group number(s), or access line number(s) over which the call is routed and the point at which the call enters the customer's network. The Company will not request such data more than once a year.

e. If quarterly reports are not supplied by the customer, the following steps will be taken by the Company:

(1) If the customer does not supply the reports, the Company will assume the PIU factors to be the same as those provided in the last quarterly report. For those cases in which a quarterly report has never been received from the customer, the Company will assume the PIU factors to be the same as those provided in the order for service as set forth in B., preceding. In any case, the Company reserves the right to request actual call detail supporting the customer's reported PIU, as specified preceding.

(2) If a quarterly report has never been received from the customer, and the customer failed to report a PIU in the order for service, the Company will designate a fifty percent (50%) interstate percentage beginning with the next billing period. This interstate percentage will be applied until a quarterly PIU report is submitted.

2. GENERAL REGULATIONS

2.3 OBLIGATIONS OF THE CUSTOMER
2.3.9 JURISDICTIONAL REPORT REQUIREMENTS (Cont'd)

D. Jurisdictional Report Dispute and Auditing Procedures

If a billing dispute arises concerning the projected interstate percentage, the Company will ask the customer to provide the data the customer uses to determine the projected interstate percentage as described in 1., following.

1. Switched Access Services

a. If the Company questions the information provided by the customer in C., preceding, the Company will send a letter to the customer (by certified U.S. Mail, return receipt requested) requesting that the customer contact the Company to discuss and explain their report within thirty (30) days of the Company's request.

b. If no response is received from the customer, the Company will send a letter to the customer (by certified U.S. Mail, return receipt requested) requesting the work papers and summary as described in C., preceding, used by the customer to substantiate the most recent interstate percentage. The requested information must be submitted by the customer to the Company within thirty (30) days after receipt of the certified letter.

c. If the customer submits the work papers and summary as requested in b., preceding, the Company will review this information within thirty (30) days after receipt of the customer's information.

d. If after review of the documentation, the Company and the customer establish a revised interstate percentage, the Company will begin using that percentage with the next billing period.

2. GENERAL REGULATIONS

2.3 OBLIGATIONS OF THE CUSTOMER
2.3.9 JURISDICTIONAL REPORT REQUIREMENTS

D.1. (Cont'd)

e. If the Company and the customer do not establish a revised interstate percentage, the Company will begin the procedures as set forth in g., following.

f. If no response is received from the customer, the Company will begin the auditing procedures as set forth in g., following, and notify the Commission.

g. When jurisdictional reports are not provided by the customer or a billing dispute arises, the Company may request an audit. The audit procedures and responsible party(ies) for payment of audit expenses will be determined as follows:

- If the Company and the customer mutually agree upon an independent auditing firm and the party(ies) agree to equally share in the payment of audit expenses, both the Company and the customer will be bound by such agreement; or

- The customer may select an independent auditing firm and pay all audit expenses.

- If the audit is not conducted as set forth preceding, the Company may select an independent auditing firm and pay all expenses.

h. The Company will adjust the customer's PIU based upon the audit results. The PIU resulting from the audit shall be applied to the usage for the quarter the audit is completed, the usage for the quarter prior to completion of the audit and the usage for the two (2) quarters following the completion of the audit. After that time, the customer may report a revised PIU pursuant to C., preceding. The Company will implement the revised interstate percentage to the next billing period or quarterly report date, whichever is first.

2. Jurisdictional Report Proprietary Information

The data the customer provides to the Company to support their interstate percentage is considered proprietary to the customer. The Company agrees to use and protect such information by exercising the same degree of care normally used to protect its own proprietary information.

2. GENERAL REGULATIONS

2.3 OBLIGATIONS OF THE CUSTOMER
2.3.9 JURISDICTIONAL REPORT REQUIREMENTS

D. Jurisdictional Report Dispute and Auditing Procedures (Cont'd)

3. Contested Audits

a. When a jurisdictional audit is conducted by the Company or an independent auditing firm selected by the Company, the audit results will be furnished to the customer by certified U.S. Mail (return receipt requested). The customer may contest the audit results by providing written notification (by certified U.S. Mail, return receipt requested), to the Company within fifteen (15) calendar days from the date the audit report is furnished to the customer by certified U.S. Mail (return receipt requested). When a jurisdictional audit is conducted by an independent auditing firm selected by the customer, the audit results will be furnished to the Company by certified U.S. Mail (return receipt requested). The Company may contest the audit results by providing written notification (by certified U.S. Mail, return receipt requested), to the customer within fifteen (15) calendar days from the date the audit report is furnished to the Company by certified U.S. Mail (return receipt requested).

b. Contested audits will be resolved by the Company and the customer within thirty (30) days of written notification. If the dispute cannot be resolved by the customer and the Company, either party reserves the right to refer the matter to the Commission for resolution or use a mutually agreed upon neutral arbitrator as described in c. through e., following. The Commission retains jurisdiction over the matter of this dispute. During the initial thirty (30) day resolution period, the Company and the customer will review the audit process and the data used to calculate the PIU factor in an attempt to resolve the dispute. Should the Company and the customer resolve the dispute on the PIU factor, a neutral arbitrator would not be warranted.

2. GENERAL REGULATIONS

2.3 OBLIGATIONS OF THE CUSTOMER
2.3.9 JURISDICTIONAL REPORT REQUIREMENTS

D.3. (Cont'd)

c. Contested audits will be resolved by a neutral arbitrator mutually agreed upon by the Company and the customer. The arbitration hearing will be conducted in Denver, Colorado or a site that is mutually agreed upon by both parties. The arbitration proceeding, including the decision rendered, shall be governed by the law (both statutory and case) of the state in which the arbitration hearing is held, including but not limited to the Uniform Arbitration Act as adopted in that state.

d. Prior to the arbitration hearing, each party shall notify the arbitrator of the PIU factor which that party believes to be correct. The arbitrator, in deciding, may adopt the PIU factor of either party or may adopt a PIU factor different from those proposed by the parties.

e. If the arbitrator adopts a PIU factor proposed by one of the parties, the other party (whose PIU factor was not adopted) shall pay all costs of the arbitration. If the arbitrator adopts a PIU factor higher than the PIU factors proposed by both parties, then the party proposing the lower PIU factors shall pay all costs of the arbitration. If the arbitrator adopts a PIU factor lower than the PIU factor proposed by both parties, then the party proposing the higher PIU factor shall pay all costs of the arbitration. If the arbitrator adopts a PIU factor which falls between the two factors proposed by the parties, then the parties shall each pay one-half of the arbitration costs.

f. Absent written notification, within the time frame as set forth preceding, audit results cannot be contested and the Company will adjust the customer's PIU factor based upon the audit results as set forth in C., preceding.

E. Application of PIU

When the Access Service is not available in the interstate jurisdiction, the PIU factor must be zero percent (0%).

2. GENERAL REGULATIONS

2.3 OBLIGATIONS OF THE CUSTOMER (Cont'd)

2.3.10 DETERMINATION OF INTRASTATE CHARGES FOR MIXED INTERSTATE AND INTRASTATE ACCESS SERVICE

A. PIU

When mixed interstate and intrastate Access Service is provided, all charges (i.e., nonrecurring, monthly and/or usage) including optional features charges, will be prorated between interstate and intrastate. The PIU factor provided in the jurisdictional reports as set forth in 2.3.9, preceding, will serve as the basis for prorating the charges. The percentage of an Access Service to be charged as intrastate is applied in the following manner:

1. For monthly and nonrecurring chargeable rate elements, multiply the percent intrastate use times the quantity of chargeable elements times the stated tariff rate per element. In the event that the customer has provided a separate percent interstate use for terminating access for FGD, the projected PIU factor for originating access minutes of use will be used to determine the apportionment of charges.

2. For usage sensitive (i.e., access minutes and calls) chargeable rate elements, multiply the percent intrastate use times actual use (i.e., measured or Company assumed average use) times the stated tariff rate.

The PIU factor will change as revised usage reports are submitted as set forth in 2.3.9, preceding.

2. GENERAL REGULATIONS

2.3 OBLIGATIONS OF THE CUSTOMER

2.3.10 DETERMINATION OF INTRASTATE CHARGES FOR MIXED INTERSTATE AND INTRASTATE ACCESS SERVICE (Cont'd)

B. Identification and Rating of VoIP-PSTN Traffic

VoIP-PSTN Traffic is defined as traffic exchanged between a Company end user and the customer in Time Division Multiplexing (TDM) format that originates and/or terminates in Internet Protocol (IP) format. This section governs the identification of VoIP-PSTN Traffic that is required to be compensated at interstate access rates unless the parties have agreed otherwise by the F.C.C. in its Report and Order in WC Dockets Nos. 10-90, etc., F.C.C. Release No. 11-161 (November 18, 2011) (F.C.C. Order).

The Company affirms that all of its South Carolina traffic either originates from or terminates to a VoIP end user and is therefore, VoIP PSTN. VoIP-PSTN Traffic identified in accordance with this tariff section will be billed at rates equal to the Company's applicable tariffed interstate switched access rates as set forth in Qwest Communications Corporation d/b/a CenturyLink Tariff F.C.C. No. 1 Tariff. These rates are contained in Sections 3.7.1 and 6.8.1, following.

2. GENERAL REGULATIONS

2.4 PAYMENT ARRANGEMENTS AND CREDIT ALLOWANCES

2.4.1 PAYMENT OF RATES, CHARGES AND DEPOSITS

A. Deposits

1. The Company may, in order to safeguard its interests, require an applicant to make a suitable deposit to be held by the Company as a guarantee of the payment of charges.

2. For Access Service, a deposit will be required under the following conditions:

   a. Applicant has had no previous Access Service; or

   b. Applicant does not have verifiable credit with any CenturyLink anywhere within the region in the same or similar business; or

   c. Applicant has had previous verifiable Access Service with the Company but has an outstanding and unpaid bill for Access Service; or has not established satisfactory credit. Satisfactory credit for an Access Service customer is defined as twelve consecutive months of service without a suspension of service for nonpayment or with no more than one notification of intent to suspend service for nonpayment.

   d. Applicant for nonresidential service will be given credit for previous nonresidential service only if the applicant is same business entity to which such service was previously accorded.

2. GENERAL REGULATIONS

2.4 PAYMENT ARRANGEMENTS AND CREDIT ALLOWANCES

2.4.1 PAYMENT OF RATES, CHARGES AND DEPOSITS

A. Deposits (Cont'd)

3. An initial deposit or an additional deposit will be required of an existing customer when high risk is indicated and existing security is insufficient. Such requirement will be imposed when payment history includes a suspension of service for nonpayment, or includes more than one notification of intention to suspend service for nonpayment during the previous twelve month period.

4. The Company reserves the right to provide for installment payment of the deposit if the circumstances warrant.

5. Any deposit required of an existing customer is due and payable within ten days after the requirement is imposed. This requirement shall be in writing and the payment date shall be on or after the due and payable date for the current bill. If said deposit or installment thereof, as appropriate, is not paid within the aforementioned time frame, the Company may suspend service of the customer without further notice. The following are exceptions to this provision:

   a. In the event service is suspended for a customer for nonpayment, an initial or additional deposit shall be required prior to the restoration of service if existing security is insufficient.

   b. In the event prior indebtedness or prior unsatisfactory credit has been determined subsequent to the initial establishment of service due to misrepresentation of the facts by the customer, a deposit shall be due and payable within five days upon verbal notification and written confirmation or within ten days when notification can only be provided in writing. The ten day period shall be measured from the mailed date of the written notice. If said deposit is not paid within the aforementioned time frame, the Company may suspend service to the customer without further notice.

2. GENERAL REGULATIONS

2.4 PAYMENT ARRANGEMENTS AND CREDIT ALLOWANCES

2.4.1 PAYMENT OF RATES, CHARGES AND DEPOSITS

A. Deposits (Cont'd)

6. The amount of the deposit shall be the estimated charges for the Access Service which will accrue for a 2-month period. All applicants and existing customers shall be treated uniformly for the determination and application of deposits.

7. When it is determined that a deposit is required under the conditions specified above, the applicant or customer may, in lieu of or in addition to making the deposit, arrange for an acceptable third party to guarantee payment of his charges by executing on his behalf a Guarantee of Payment Agreement with the Company. An acceptable third party guarantor for Access Service is a current nonresidential customer with at least two years' continuous service, whose payment history for the most recent twelve month period is satisfactory.

8. The fact that a deposit has been made in no way relieves the customer from complying with the Company's regulations as to advance payments as set forth in B., following, or the prompt payment of bills on presentation.

9. The deposit will bear interest as required by state law or regulations.

10. When the customer is a candidate for political office or is a person or organization acting on behalf of a candidate for political office the deposit requirement will be adjusted monthly to reflect twice the current month's actual billing. Under these circumstances, a security, i.e., surety bond or bank letter of credit equal to the Company's deposit requirement will be the only acceptable substitutes for a cash deposit.

11. When the service is terminated, the amount of the initial or additional deposit, with any interest due, will be credited to the customer's account and any credit balance which may remain will be refunded. After an existing customer has established satisfactory credit, the amount of the deposit, with any interest due, will be either credited to the account or at the option of the customer, refunded. Satisfactory credit for an Access Service customer is defined as twelve consecutive months of Access Service without a suspension for nonpayment and with no more than one notification of intent to suspend service for nonpayment.

2. GENERAL REGULATIONS

2.4 PAYMENT ARRANGEMENTS AND CREDIT ALLOWANCES
2.4.1 PAYMENT OF RATES, CHARGES AND DEPOSITS (Cont'd)

B. Advance Payments

1. In accordance with the Company's practice of requiring that all regularly recurring charges for services be paid monthly in advance, an applicant for service may be required to pay in advance at the time application for service is made, the nonrecurring charges applicable, together with at least one month's charges for the services applied for, and where necessary, in the opinion of the Company, the estimated amount of construction charges.

2. The amount of the advance payment will be credited to the customer's account and applied to any indebtedness under the contract for service furnished, and for nonrecurring charges.

C. The Company shall bill on a current basis all charges incurred by and credits due to the customer under this Tariff attributable to services established or discontinued during the preceding billing period. In addition, the Company shall bill in advance charges for all services to be provided during the ensuing billing period except for charges associated with service usage and for the Federal Government which will be billed in arrears. The bill day (i.e., the billing date of a bill for a customer for Access Service under this Tariff), the period of service each bill covers and the payment date will be as follows:

1. The Company will establish a bill day each month for each customer account. The bill will cover nonusage sensitive service charges for the ensuing billing period and any known unbilled nonusage sensitive charges. Any known unbilled usage charges for prior periods and any known unbilled adjustments will be applied to this bill. Payment for such bills is due as set forth in 2., following. If payment is not received by the payment due date, as set forth in 2., following, in immediately available funds, a late payment penalty will apply as set forth in 2., following.

2. GENERAL REGULATIONS

2.4 PAYMENT ARRANGEMENTS AND CREDIT ALLOWANCES

2.4.1 PAYMENT OF RATES, CHARGES AND DEPOSITS

C. (Cont'd)

2. All bills dated as set forth in 1., preceding, for service, provided to the customer by the Company are due (payment due date) by the next bill date (i.e., same date in the following month as the bill date), except as provided herein, and are payable in immediately available funds. If such payment due date would cause payment to be due on a Saturday, Sunday or holiday (i.e., New Year's Day, Independence Day, Labor Day, Thanksgiving Day, Christmas Day, Veteran's Day and a day when Washington's Birthday, Memorial Day or Columbus Day is legally observed), payment for such bills will be due from the customer as follows:

a. If such payment due date falls on a Sunday or on a holiday which is observed on a Monday, the payment due date shall be the first non-holiday day following such Sunday or holiday. If such payment due date falls on a Saturday or on a holiday which is observed on Tuesday, Wednesday, Thursday or Friday, the payment due date shall be the last non-holiday day preceding such Saturday or holiday.

b. Further, if any portion of the payment is received by the Company after the payment due date as set forth above, or if any portion of the payment is received by the Company in funds which are not immediately available to the Company, then a late payment penalty shall be due to the Company. The late payment penalty shall be the portion of the payment not received by the payment due date times a late factor. The late factor shall be the lesser of:

(1) The highest interest rate (in decimal value) which may be levied by law for commercial transactions, compounded daily for the number of days from the payment due date to and including the date that the customer actually makes the payment to the Company, or

(2) 0.000407 per day, compounded daily for the number of days from the payment due date to and including the date that the customer actually makes the payment to the Company.

2. GENERAL REGULATIONS

2.4 PAYMENT ARRANGEMENTS AND CREDIT ALLOWANCES
2.4.1 PAYMENT OF RATES, CHARGES AND DEPOSITS

C.2. (Cont'd)

c. In the event of a billing dispute, the customer must submit a documented claim for the disputed amount. If the claim is submitted within 90 days of the payment due date, any interest credits due the customer upon resolution of the dispute shall be calculated from the bill payment date. If the customer submits a claim for the disputed amount more than 90 days from the payment due date, any interest credits due the customer upon resolution of the dispute shall be calculated from the later of the date the claim was submitted, or the bill payment date. Any undisputed amounts withheld by the customer in conjunction with disputed amounts withheld, shall be subject to the late payment penalty, as set forth in a., preceding. The Company will resolve the dispute and assess interest credits or penalties to the customer as follows:

(1) If the dispute is resolved in favor of the Company and the customer has paid the disputed amount on or before the payment due date, no interest credits or penalties will apply.

(2) If the dispute is resolved in favor of the Company and the customer has withheld the disputed amount, any payments withheld pending settlement of the dispute shall be subject to the late payment penalty as set forth in b., preceding.

(3) If the dispute is resolved in favor of the customer and the customer has withheld the disputed amount, no interest credits or penalties will apply.

2. GENERAL REGULATIONS

2.4 PAYMENT ARRANGEMENTS AND CREDIT ALLOWANCES
2.4.1 PAYMENT OF RATES, CHARGES AND DEPOSITS

C.2.c. (Cont'd)

(4) If the dispute is resolved in favor of the customer and the customer has paid the disputed amount, the customer will receive an interest credit from the Company for the disputed amount times a late factor. The late factor shall be the lesser of:

(a) The highest interest rate (in decimal value) which may be levied by law for commercial transactions, compounded daily for the number of days from the date when payment was made or credit claimed in accordance with b., preceding, to and including the payment due date (as set forth in 2., preceding) of the bill that reflects the credit for the disputed amount. In the event that the Company agrees to refund a credit by check or wire transfer, interest will be applied up to and including the date of issuance for either the check or wire transfer.

(b) 0.000407 per day, compounded daily for the number of days from the date when payment was made or credit claimed in accordance with b., preceding, to and including the payment due date (as set forth in 2., preceding) of the bill that reflects the credit for the disputed amount. In the event that the Company agrees to refund a credit by check or wire transfer, interest will be applied up to and including the date of issuance for either the check or wire transfer.

D. Adjustments for the quantities of services established or discontinued in any billing period beyond the minimum period set forth for services in other sections of this Tariff will be prorated to the number of days or major fraction of days based on a 30 day month. The Company will, upon request and if available, furnish such detailed information as may reasonably be required for verification of any bill.

E. When a rate as set forth in this Tariff is shown to have more than two decimal places, the charges will be determined using the rate shown. The resulting amount will then be rounded to the nearest penny (i.e., rounded to two decimal places).

2. GENERAL REGULATIONS

2.4 PAYMENT ARRANGEMENTS AND CREDIT ALLOWANCES(Cont'd)

2.4.2 MINIMUM PERIODS

A. The minimum period for which services are provided and for which rates and charges are applicable is one month unless otherwise specified.

B. When a service is discontinued prior to the expiration of the minimum period, charges are applicable, whether the service is used or not, as follows:

1. When a service with a one month minimum period is discontinued prior to the expiration of the minimum period, a one month charge will apply at the rate level in effect at the time service is discontinued.

2. When a service with a minimum period greater than one month is discontinued prior to the expiration of the minimum period, the applicable charge will be the lesser of (1) the Company's total non-recoverable costs less the net salvage value for the discontinued service or (2) the total monthly charges, at the rate level in effect at the time service is discontinued, for the remainder of the minimum period.

2.4.3 CANCELLATION OF AN ORDER FOR SERVICE

Provisions for the cancellation of an order for service are set forth in Section 5, following.

2.4.4 CANCELLATION FOR CAUSE

The Company, by written notice to the customer, may immediately discontinue the furnishing of Access Service without incurring any liability upon:

A. Nonpayment of any sum due the Company, or

B. A violation of any condition governing the furnishing of service.

2. GENERAL REGULATIONS

2.4 PAYMENT ARRANGEMENTS AND CREDIT ALLOWANCES (Cont'd)

2.4.5 CREDIT ALLOWANCE FOR SERVICE INTERRUPTIONS

A. General

A service is interrupted when it becomes unusable to the customer because of a failure of a facility component used to furnish service under this Tariff or in the event that the protective controls applied by the Company result in the complete loss of service by the customer as set forth in 6.5.1, following. An interruption period starts when an inoperative service is reported to the Company, and ends when the service is operative.

Reports of an inoperative service will be taken only from the customer of record for that particular service.

B. When a Credit Allowance Applies

In case of an interruption to any service, allowance for the period of interruption, if not due to the negligence of the customer, shall be as follows:

1. For Switched Access Service, other than Entrance Facilities and Direct-Trunked Transport Facilities, no credit shall be allowed for an interruption of less than 24 hours. The customer shall be credited for an interruption of 24 hours or more at the rate of 1/30 of (a) any applicable monthly rates or (b) the assumed minutes of use charge for each period of 24 hours or major fraction thereof that the interruption continues.

2. For Switched Access Entrance Facilities, Direct-Trunked Transport Facilities and any optional multiplexing arrangements associated with such facilities, no credit shall be allowed for an interruption of less than 30 minutes. The customer shall be credited for an interruption of 30 minutes or more at the rate of 1/1440 of the monthly charges for each period of 30 minutes or major fraction thereof that the interruption continues. The monthly charge shall be the total of all the monthly rate element charges associated with that portion of the service (i.e., Entrance Facility, Direct-Trunked Transport Facility and Multiplexer) that is inoperative.

3. The credit allowance(s) for an interruption or for a series of interruptions shall not exceed (a) any applicable monthly rates or (b) the assumed minutes of use charge for the service interrupted in any one monthly billing period.

2. GENERAL REGULATIONS

2.4 PAYMENT ARRANGEMENTS AND CREDIT ALLOWANCES
2.4.5 CREDIT ALLOWANCE FOR SERVICE INTERRUPTIONS (Cont'd)

C. When A Credit Allowance Does Not Apply

No credit allowance will be made for:

1. Interruptions caused by the negligence of the customer.

2. Interruptions of a service due to the failure of equipment or systems provided by the customer or others.

3. Interruptions of a service during any period in which the Company is not afforded access to the premises where the service is terminated.

4. Interruptions of a service when the customer has released that service to the Company for maintenance purposes, to make rearrangements, or for the implementation of an order for a change in the service during the time that was negotiated with the customer prior to the release of that service. Thereafter, a credit allowance as set forth in B., preceding, applies.

5. Periods when the customer elects not to release the service for testing and/or repair and continues to use it on an impaired basis.

6. Periods of temporary discontinuance as set forth in 2.2.1.B., preceding.

7. An interruption or a group of interruptions, resulting from a common cause that would amount to an adjustment of less than one dollar.

2. GENERAL REGULATIONS

2.4 PAYMENT ARRANGEMENTS AND CREDIT ALLOWANCES
2.4.5 CREDIT ALLOWANCE FOR SERVICE INTERRUPTIONS (Cont'd)

D. Use of an Alternative Service Provided by the Company

Should the customer elect to use an alternative service provided by the Company during the period that a service is interrupted, the customer must pay the tariffed rates and charges for the alternative service used.

E. Temporary Surrender of a Service

In certain instances, the customer may be requested by the Company to surrender a service for purposes other than maintenance, testing or activity relating to a service order. If the customer consents, a credit allowance will be granted. The credit allowance will be 1/1440 of the monthly rate for each period of 30 minutes or fraction thereof that the service is surrendered. In no case will the credit allowance exceed the monthly rate for the service surrendered in any one monthly billing period.

2.4.6 REESTABLISHMENT OF SERVICE FOLLOWING FIRE, FLOOD OR OTHER OCCURRENCE

A. Nonrecurring Charges Do Not Apply

Charges do not apply for the reestablishment of service following a fire, flood or other occurrence attributed to an Act of God provided that:

1. The service is of the same type as was provided prior to the fire, flood or other occurrence.

2. The service is for the same customer.

3. The service is at the same location on the same premises.

4. The reestablishment of service begins within 60 days after Company service is available. (The 60 day period may be extended a reasonable period if the renovation of the original location on the premises affected is not practical within the allotted time period).

2. GENERAL REGULATIONS

2.4 PAYMENT ARRANGEMENTS AND CREDIT ALLOWANCES

2.4.6 REESTABLISHMENT OF SERVICE FOLLOWING FIRE, FLOOD OR OTHER OCCURRENCE (Cont'd)

B. Nonrecurring Charges Apply

Nonrecurring charges apply for establishing service at a different location on the same premises or at a different premises pending reestablishment of service at the original location.

2.4.7 TITLE OR OWNERSHIP RIGHTS

The payment of rates and charges by customers for the services offered under the provisions of this Tariff does not assign, confer or transfer title or ownership rights to proposals or facilities developed or utilized, respectively, by the Company in the provision of such services.

2. GENERAL REGULATIONS

2.4 PAYMENT ARRANGEMENTS AND CREDIT ALLOWANCES (Cont'd)

2.4.8 ORDERING, RATING AND BILLING OF ACCESS SERVICES WHERE MORE THAN ONE COMPANY IS INVOLVED

All information necessary for billing, ordering and design coordination will be provided based on the standards in the Multiple Exchange Carriers Access Billing Guidelines (MECAB) and the Multiple Exchange Carriers Ordering and Design Guidelines (MECOD) to ensure that jointly provided Access Services are installed, tested and turned up in a timely manner.

Company and Third Party Carrier will render separate bills as follows:

- Each company involved will accept the order from the customer.
- Each company will provide it's portion of the Transport element and will bill the charges in accordance with its Access Service Tariff or contract, if appropriate. All other appropriate charges in each company's tariff are applicable.
- Each company will render bills for nonrecurring charges as they are incurred. Bills for recurring rates will not be rendered until the service ordered can be provided by all of the companies involved.
- Each company will determine the appropriate Transport by computing the airline mileage between the two ends of the Transport element using the V & H methods as set forth in 6.7.7, following.
- Each company will determine the rate for the airline mileage as set forth above, using it's Tariff. Multiply such rate by the company's billing percentage factor and divide by 100 to obtain the Transport element charges.

The billing percentages will be agreed upon by the companies involved.

2. GENERAL REGULATIONS

2.4 PAYMENT ARRANGEMENTS AND CREDIT ALLOWANCES
2.4.8 ORDERING, RATING AND BILLING OF ACCESS SERVICES WHERE MORE THAN ONE COMPANY IS INVOLVED (Cont'd)

A. When jointly provisioned Access Service is provided between the Company and a LEC Tandem, the appropriate Tandem Transmission and End Office rate elements will be applied.

For Switched Access Service, the recurring rates will be applied as follows: 1) multiply the Tandem Transmission fixed rate by the minutes of use (MOU) by the billing percentage (BP), 2) multiply the Tandem Transmission per-mile rate by the number of miles, by the MOU, by the BP, and 3) all other appropriate Switched Access recurring rate elements at 100 percent, if applicable.

The tandem owner (LEC) will assess the Tandem Switching rate.

B. When jointly provisioned Access Service is provided between the Company and a Third Party Carrier, the appropriate nonrecurring charges shall apply, however the BP is not applied to nonrecurring charges.

2. GENERAL REGULATIONS

2.4 PAYMENT ARRANGEMENTS AND CREDIT ALLOWANCES
2.4.8 ORDERING, RATING AND BILLING OF ACCESS SERVICES WHERE MORE THAN ONE COMPANY IS INVOLVED (Cont'd)

C. Example 1 - Switched Access provisioned by LEC Tandem Routing

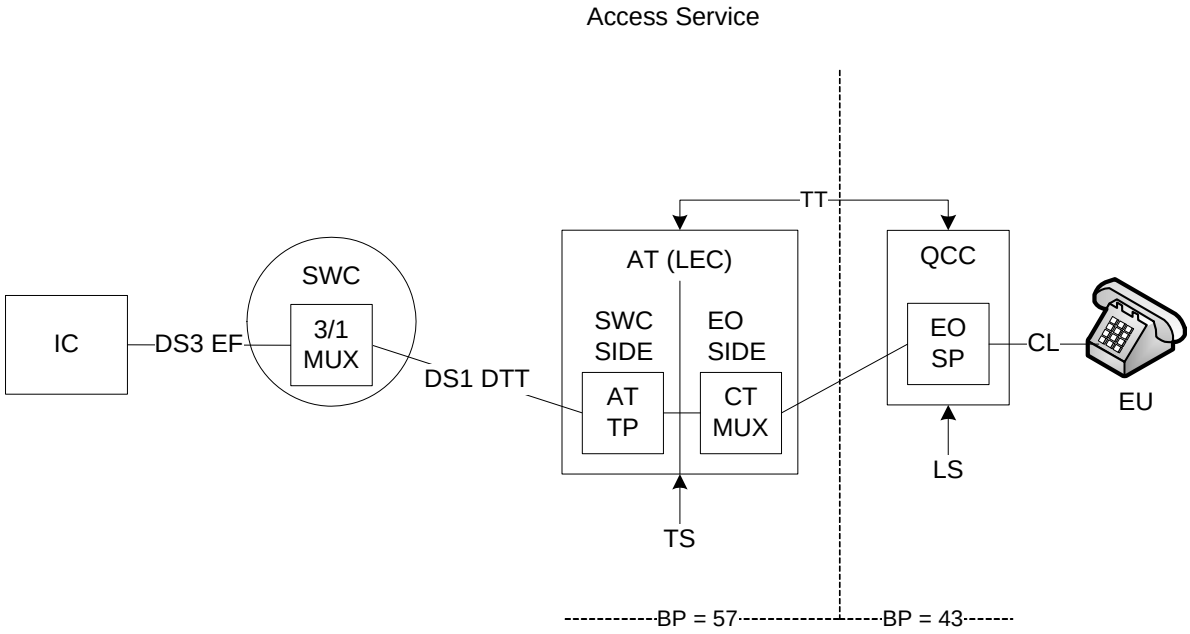

AT – Access Tandem
ATTP – Access Tandem Trunk Port
BP – Billing Percentage
CL – Common Line
CT MUX – Common Transport Multiplexer
DTT – Direct Trunked Transport
EF – Entrance Facility
EO SP – End Office Shared Port
EU – End User
IC – Interexchange Carrier
LEC – Local Exchange Carrier
MUX – Multiplexer
SWC – Serving Wire Center
TS – Tandem Switching
TT – Tandem Transmission

2. GENERAL REGULATIONS

2.4 PAYMENT ARRANGEMENTS AND CREDIT ALLOWANCES

2.4.8 ORDERING, RATING AND BILLING OF ACCESS SERVICES WHERE MORE THAN ONE COMPANY IS INVOLVED

C. Example 1 - Switched Access provisioned by LEC Tandem Routing (Cont'd)

1. Layout

a. Feature Group D Switched Access is ordered to a Company end office via LEC Tandem Routing.

b. The premises of the ordering customer and the serving wire center (SWC) of that premises, and the access tandem are associated with the LEC.

c. The customer orders a DS3 Entrance Facility from the customer's premises to the SWC with a 3/1 MUX in the SWC.

d. The customer orders a DS1 DTT to the AT.

e. The BP for Tandem Transmission is 57 for the LEC.

f. The end office is associated with the Company.

g. The BP for Tandem Transmission is 43 for the Company.

2. GENERAL REGULATIONS

2.4 PAYMENT ARRANGEMENTS AND CREDIT ALLOWANCES

2.4.8 ORDERING, RATING AND BILLING OF ACCESS SERVICES WHERE MORE THAN ONE COMPANY IS INVOLVED

C. Example 1 - Switched Access provisioned by LEC Tandem Routing (Cont'd)

2. Rate elements assessed per telephone company

a. LEC

• Entrance Facility	-100% of DS3 monthly Entrance Facility rate
• MUX	-100% of monthly 3/1 MUX rate
• DS1 DTT	-100% of DS1 monthly DTT rate
• ATTP	-100% of ATTP monthly rate
• Tandem Switching	-MOU rate X MOU
• Common Transport MUX	-MOU rate X MOU
• Tandem Transmission	-Fixed rate X MOU X 0.57
• Tandem Transmission	-Per-mile rate X number of miles X MOU X 0.57

b. Company

• Tandem Transmission	-Fixed rate X MOU X 0.43
• Tandem Transmission	-Per-mile rate X number of miles X MOU X 0.43
• Local Switching	-MOU rate X MOU
• End Office Shared Port	-MOU rate X MOU
• Common Line	-MOU rate X MOU

2. GENERAL REGULATIONS

2.5 CONNECTIONS

2.5.1 GENERAL

Equipment and Systems (i.e., terminal equipment, multiline terminating systems and communications systems) may be connected with Switched Access Service furnished by the Company where such connection is made in accordance with Industry Standards.

2. GENERAL REGULATIONS

2.6 DEFINITIONS

Certain terms used herein are defined as follows:

Access Minutes

Denotes that usage of exchange facilities in intrastate service for the purpose of calculating chargeable usage. On the originating end of an intrastate call, usage is measured from the time the originating end user's call is delivered by the Company to and acknowledged as received by the customer's facilities connected with the originating exchange. On the terminating end of an intrastate call, usage is measured from the time the call is received by the end user in the terminating exchange. Timing of usage at both originating and terminating ends of an intrastate call shall terminate when the calling or called party disconnects, whichever event is recognized first in the originating and terminating exchanges, as applicable.

Access Tandem

Denotes a switching system that provides a concentration and distribution function for originating or terminating traffic between end offices and a customer's POT.

Bit

Denotes the smallest unit of information in the binary system of notation.

Business Day (BD)

Denotes the times of day that a company is open for business. Generally, in the business community, these are 8:00 a.m. to 5:00 p.m., with an hour for lunch, Monday through Friday, resulting in a standard forty (40) hour work week. However, Business Day hours for the Company may vary based on Company policy, union contract and location.

2. GENERAL REGULATIONS

2.6 DEFINITIONS (Cont'd)

Call

Denotes a customer attempt for which the complete address code (e.g., 0-, 911, or 10 digits) is provided to the serving dial tone office.

Calling Party Number (CPN)

Denotes the SS7 Out of Band Signaling parameter which automatically transmits the calling party's ten digit telephone number to the customer's premises for calls originating in the LATA.

Carrier or Common Carrier

See "Interexchange Carrier", “Local Exchange Carrier”, “Commercial Mobile Radio Service Provider”, “Third Party Carrier”.

CCS

Denotes a hundred call seconds, which is a standard unit of traffic load that is equal to 100 seconds of usage or capacity of a group of servers (e.g., trunks).

Channel(s)

Denotes an electrical or photonic, in the case of fiber optic-based transmission systems, communications path between two or more POTs.

Charge Number (CN)

Denotes the SS7 Out of Band Signaling parameter which is equivalent to the ten digit ANI telephone number.

2. GENERAL REGULATIONS

2.6 DEFINITIONS (Cont'd)

Commercial Mobile Radio Service (CMRS) Provider

Denotes a common carrier as defined by the Federal Communications Commission subject to the Rules set forth in Section 332 of the Communications Act.

Communications System

Denotes channels and other facilities which are capable of communications between terminal equipment provided by other than the Company.

Contract

Denotes the service agreement between a customer and the Company under which facilities for communication between specified locations, for designated periods, and for the use of the customer and the authorized users specifically named in the contract are furnished in accordance with the provisions of this Tariff.

Customer(s)

Denotes any individual, partnership, association, joint-stock company, trust, corporation, governmental entity or any other entity which subscribes to the services offered under this Tariff based on the Application of Tariff as set forth in 1.1, preceding.

Demarcation Point

See "Point of Termination (POT)".

Direct-Trunked Transport (DTT)

Denotes the transport between the SWC of the customer's premises and a tandem.

2. GENERAL REGULATIONS

2.6 DEFINITIONS (Cont'd)

End Office Switch

Denotes a local Company switching system where Telephone Exchange Service customer station loops are terminated for purposes of interconnection to trunks.

End User (EU)

Denotes any customer of an intrastate telecommunications service that is not a carrier shall be deemed to be an “end user” when such carrier (other than the Company) uses a telecommunications service for administrative purposes. A person or entity other than an IC that offers telecommunications services exclusively as a reseller shall be deemed to be an “end user” if all resale transmissions offered by such reseller originate or terminate on the premises of such reseller.

Entrance Facility (EF)

Denotes the dedicated transport facility from the customer’s premises or point of demarcation to the SWC for Switched Access Service.

Entry Switch

See "First Point of Switching".

Exchange

Denotes a unit generally smaller than a Local Access and Transport Area, established for the administration of communications service in a specified area which usually embraces a city, town, or village and its environs. It consists of one or more central offices together with the associated facilities used in furnishing communications service within that area. The exchange may include any Extended Area Service (EAS) area that is an enlargement of a Company's exchange area to include nearby exchanges. One or more designated exchanges comprise a given Local Access and Transport Area.

2. GENERAL REGULATIONS

2.6 DEFINITIONS (Cont'd)

First Point of Switching

Denotes the first Company location at which switching occurs on the terminating path of a call proceeding from the customer's premises to the terminating end office and, at the same time, the last Company location at which switching occurs on the originating path of a call proceeding from the originating end office to the customer's premises.

Immediately Available Funds

Denotes a corporate or personal check drawn on a bank account and funds which are available for use by the receiving party on the same day on which they are received and include U.S. Federal Reserve bank wire transfers, U.S. Federal Reserve notes (paper cash), U.S. coins, U.S. Postal Money Orders and New York Certificates of Deposit.

Individual Case Basis (ICB)

Denotes a condition in which the terms and conditions, if applicable, rates and charges for an offering are developed based on the circumstances in each case.

Interexchange Carrier (IC) or Interexchange Common Carrier

Denotes any individual, partnership, association, joint-stock company, trust, governmental entity or corporation engaged for hire in intrastate communication by wire or radio between two or more exchanges.

Interstate Communications

Denotes both interstate and foreign communications.

Intrastate Communications

Denotes any communications within a state subject to oversight by a state regulatory commission as provided by the laws of the state involved.

2. GENERAL REGULATIONS

2.6 DEFINITIONS (Cont'd)

Local Access and Transport Area (LATA)

Denotes a geographic area established for the provision and administration of communications service. It encompasses one or more designated exchanges, which are grouped to serve common social, economic and other purposes.

Local Exchange Carrier (LEC)

Local Exchange Carrier (LEC) means any carrier that is engaged in the provision of telephone Exchange Service or Exchange Access. Such term does not include a carrier insofar as such carrier is engaged in the provision of a commercial mobile service under Section 332(c) of the Act, except to the extent that the FCC finds that such service should be included in the definition of such term.

Major Fraction Thereof

Denotes any period of time in excess of 1/2 of the stated amount of time. As an example, in considering a period of 24 hours, a major fraction thereof would be any period of time in excess of 12 hours exactly. Therefore, if a given service is interrupted for a period of thirty six hours and fifteen minutes, the customer would be given a credit allowance for two twenty four hour periods for a total of forty eight hours.

Message

Denotes a "call" as defined preceding.

Milliwatt (102 Type) Test Line

Denotes an arrangement in an end office which provides a 1004 Hz tone at 0 dBm0 for one-way transmission measurements towards the customer's premises from the Company end office.

2. GENERAL REGULATIONS

2.6 DEFINITIONS (Cont'd)

Multiplexing (MUX)

Denotes a method of concentrating information via signal processing techniques (i.e., frequency division, multiplexing, time division multiplexing, etc.)

Nonrecurring Charge

Denotes those charges which are one time charges to the customer, i.e., not monthly charges.

North American Numbering Plan (NANP)

Denotes a numbering scheme which includes a three-digit (Numbering Plan Area) code and a seven-digit telephone number which consists of a three-digit central office code plus a four-digit station number.

Office Replacement

Denotes a situation where the hardware and software in a Company switching office is replaced with different hardware and software for the establishment and maintenance of a given switching office.

Originating Direction

Denotes the use of Access Service for the origination of calls from an end user's premises to a customer's premises.

Percent Interstate Use (PIU)

The term “Percent Interstate Use” (PIU) refers to traffic that originates in one state and terminates in a different state.

2. GENERAL REGULATIONS

2.6 DEFINITIONS (Cont'd)

Point of Termination (POT)

Denotes a point at or near a customer-designated premises at which the Company's responsibility for the provision of Access Service ends.

Premises

Denotes a building, or a portion of a building in a multitenant building, or buildings on continuous property (except railroad rights-of-way, etc.) not separated by a public highway. It may also denote a customer-owned enclosure or utility vault located above ground or underground on private property or on customer acquired right-of-way. This term is not to be limited to one building, but applies as well to a complex, or campus-type configuration of buildings.

Query

Denotes the inquiry to a Company data base to obtain information, processing instructions or service data.

Release Message

Denotes a SS7 message sent in either direction to indicate the release of a specific circuit.

Serving Wire Center (SWC)

Denotes the local office from which dial tone for local exchange service would normally be provided to the customer's premises.

2. GENERAL REGULATIONS

2.6 DEFINITIONS (Cont'd)

Signaling

Denotes the process of passing information, identifying the called subscriber or addressee and for supervising and controlling the connection once it has been established.

Signaling System 7 (SS7)

Denotes the signaling protocol.

Switching System

Denotes the hardware and/or software utilized by the Company for the establishment and maintenance of a given wire center.

Tandem-Switched Transport (TST)

Denotes the transport between an access tandem and Company end office that subtends the access tandem that utilizes tandem switching functions. Tandem-Switched Transport consists of circuits used in common by multiple customers from the tandem to an end office.

Terminating Direction

Denotes the use of Access Service for the completion of calls from a customer's premises to an end user's premises.

Third Party Carrier

A Local Exchange Carrier or CMRS provider other than the Company.

Toll VoIP-PSTN Traffic

The term Toll VoIP-PSTN Traffic denotes a customer’s interexchange voice traffic exchanged with the Telephone Company in Time Division Multiplexing format over PSTN facilities, which originates and/or terminates in Internet Protocol (IP) format. Toll VoIP-PSTN Traffic originates and /or terminates in IP format when it originates from and/or terminates to an end user customer of a service that requires IP-compatible customer premises equipment.

2. GENERAL REGULATIONS

2.6 DEFINITIONS (Cont'd)

Traffic Type

Denotes Switched Access capacity types.

Transmission Path

Denotes an electrical path capable of transmitting signals within the range of the service offering, e.g., a voice grade transmission path is capable of transmitting voice frequencies within the approximate range of 300 to 3000 Hz. A transmission path comprises physical or derived channels consisting of any form or configuration of facilities typically used in the telecommunications industry.

Trunk

Denotes a communications path connecting two switching systems in a network, used in the establishment of an end-to-end connection.

Trunk Group

Denotes a set of trunks which are traffic engineered as a unit for the establishment of connections between switching systems in which all of the communications paths are interchangeable.

Trunkside Connection

Denotes the connection of a transmission path to the trunk side of a local exchange switching system.

V and H Coordinates Method

Denotes a method of computing airline miles between two points by utilizing an established formula which is based on the vertical (V) and horizontal (H) coordinates of the two points.

Wire Center

Denotes a building in which one or more central offices, used for the provision of Telephone Exchange Services, are located.

3. CARRIER COMMON LINE ACCESS SERVICE

Alphabetical By SUBJECT PAGE

Access Groups 1

Billing of Rates 3

Carrier Common Line 3

Determination of Jurisdiction 2
Determination of Rates 3
Determination of Usage Subject to Carrier Common Line Access Rates .. 2

Exclusions 1

General Description 1

Interstate and Intrastate Use 1

Limitations 1

Obligations of the Customer 2

Percent Interstate Use (PIU) 3
Provision of Service 1

Rate Regulations 3
Rates and Charges 3

Supervision 2
Switched Access Service Provided in Conjunction with a Commercial Mobile Radio Service Provider 2
Switched Access Service Requirement 2

Undertaking of the Company 1

3. CARRIER COMMON LINE ACCESS SERVICE

3.1 GENERAL DESCRIPTION

Carrier Common Line Access Service provides for the use of Company common lines by customers for access to end users to furnish intrastate telecommunications service.

The Company will provide Carrier Common Line Access Service (Carrier Common Line Access) to customers in conjunction with Switched Access Service provided in Section 6 of this Tariff.

3.2 LIMITATIONS

3.2.1 EXCLUSIONS

Neither a telephone number nor detail billing are provided with Carrier Common Line Access. Additionally, directory listings and intercept arrangements are not included in the rates for Carrier Common Line Access.

3.2.2 ACCESS GROUPS

All line side connections provided in the same access group will be limited to the same features and operating characteristics.

3.3 UNDERTAKING OF THE COMPANY

3.3.1 PROVISION OF SERVICE

Where the customer is provided Switched Access Service under other sections of this Tariff, the Company will provide the use of Company common lines by a customer for access to end users at rates as set forth in 3.7, following.

3.3.2 INTERSTATE AND INTRASTATE USE

The Switched Access Service provided by the Company includes the Switched Access Service provided for both interstate and intrastate communications. The Carrier Common Line Access rates as set forth in 3.7, following, apply to interstate Switched Access Service access minutes in accordance with the rate regulations as set forth in 3.6, following, Percent Interstate Use-(PIU).

3. CARRIER COMMON LINE ACCESS SERVICE

3.4 OBLIGATIONS OF THE CUSTOMER

3.4.1 SWITCHED ACCESS SERVICE REQUIREMENT

The Switched Access Service associated with Carrier Common Line Access shall be ordered by the customer under other sections of this Tariff.

3.4.2 SUPERVISION

The customer facilities at the premises of the ordering customer shall provide the necessary on-hook and off-hook supervision.

3.5 DETERMINATION OF USAGE SUBJECT TO CARRIER COMMON LINE ACCESS RATES

Except as set forth herein, all Switched Access Service provided to the customer will be subject to Carrier Common Line Access rates.

3.5.1 DETERMINATION OF JURISDICTION

When the customer reports interstate and intrastate use of Switched Access Service, the associated Carrier Common Line Access used by the customer for interstate will be determined as set forth in 3.6.2, following, Percent Interstate Use-(PIU).

3.5.2 SWITCHED ACCESS SERVICE PROVIDED IN CONJUNCTION WITH A COMMERCIAL MOBILE RADIO SERVICE PROVIDER

For Switched Access Service provided in conjunction with a Commercial Mobile Radio Service provider, Carrier Common Line Access rates do not apply.

3. CARRIER COMMON LINE ACCESS SERVICE

3.6 RATE REGULATIONS

3.6.1 BILLING OF RATES

Carrier Common Line Access rates will be billed to each Switched Access Service provided under this Tariff in accordance with the regulations as set forth in 3.6.2, following, Percent Interstate Use (PIU).

3.6.2 PERCENT INTERSTATE USE (PIU)

When the customer reports interstate and intrastate use of in-service Switched Access Service, Carrier Common Line Access rates will be billed only to intrastate Switched Access Service access minutes based on the data reported by the customer as set forth in 2.3.9, preceding, except where the Company is billing according to actuals by jurisdiction.

3.6.3 DETERMINATION OF RATES

After the adjustments as set forth 3.6.2 (PIU), preceding, have been applied, when necessary, to Switched Access Service access minutes, rates for the involvement customer account will be determined as follows:

The terminating access per minute rate applies to all terminating access minutes of use. The originating access per minute rate applies to all originating access minutes of use.

3.7 RATES AND CHARGES

3.7.1 CARRIER COMMON LINE

	RATE PER ACCESS MINUTE
• Originating,	$0.000000
• Terminating,	0.000000

COMPETITIVE ACCESS SERVICES TARIFF

4. INDIVIDUAL CASE BASIS ARRANGEMENTS

SUBJECT **PAGE**

Individual Case Basis (ICB) Arrangements..... 1

4. INDIVIDUAL CASE BASIS ARRANGEMENTS

4.1 INDIVIDUAL CASE BASIS (ICB) ARRANGEMENTS

Competitive pricing arrangements at negotiated rates or other terms may be furnished on an Individual Case Basis (ICB) in response to request by customers to the Company, for alternate terms, for proposals or for competitive bids. Service offered under this Tariff provision will be provided to the customer pursuant to contract. Unless otherwise specified, the regulations for such arrangements are in addition to the applicable regulations and prices in other sections of this Tariff. Specialized rates or charges will be made available to similarly situated customers on a non-discriminatory basis.

COMPETITIVE ACCESS SERVICES TARIFF

5. ORDERING OPTIONS FOR ACCESS SERVICE

SUBJECT	PAGE
Access Order	1
Access Order Service Date Intervals	1
Cancellation of an Access Order	2
Discontinuance of Service	3
General	1
Minimum Period	3
Negotiated Interval	2
Ordering Conditions	1
Standard Interval	1

5. ORDERING OPTIONS FOR ACCESS SERVICE

5.1 GENERAL

This section sets forth the terms, conditions and order related charges for Access Services. These charges are in addition to other applicable charges as set forth in other sections of this Tariff.

An Access Order is an order to provide the customer with any service designated in this Tariff.

5.1.1 ORDERING CONDITIONS

The customer shall provide all information necessary for the Company to provide and bill for the requested service including:

- Customer name and premises address(es).
- Billing name and address (when different from customer name and address).
- Customer contact name(s) and telephone number(s).

5.2 ACCESS ORDER

5.2.1 ACCESS ORDER SERVICE DATE INTERVALS

Access Service is provided with one of the following Service Date Intervals:

- Standard Interval
- Negotiated Interval

To the extent the service can be made available with reasonable effort, the Company will provide the service in accordance with the Customer's requested interval, subject to the following conditions:

A. Standard Interval:

- The Standard Interval for Switched Access Service will be 45 days.
- Access Services provided under the Standard Interval will be installed during Company business hours.

5. ORDERING OPTIONS FOR ACCESS SERVICE

5.2 ACCESS ORDER
5.2.1 ACCESS ORDER SERVICE DATE INTERVALS (Cont'd)

B. Negotiated Interval:

The Company will negotiate a service date interval with the Customer on an Individual Case Basis (ICB) when:

- There is no standard interval for the service,
- The Customer requests a service date before or beyond the applicable Standard Interval Service Date,
- The Company determines that the service cannot be installed within the Standard Interval.

The Company will offer a Service Date based on the type and quantity of Access Services the Customer has required. All services for which rates are applied on an Individual Case Basis are provided with a Negotiated Interval.

5.2.2 CANCELLATION OF AN ACCESS ORDER

A customer may cancel an Access Order upon written notice at least five business days prior to the estimated availability date. The Company may invoice the customer for costs incurred, not to exceed the nonrecurring charges associated with the order.

5. ORDERING OPTIONS FOR ACCESS SERVICE

5.2 ACCESS ORDER (Cont'd)

5.2.3 MINIMUM PERIOD

A. The minimum period for which service is provided and for which charges are applicable is one month.

B. When Access Service is disconnected prior to the expiration of the minimum period, charges are applicable for the balance of the minimum period. The Minimum Period Charge for monthly billed services will be determined as follows:

- The charge for a month or fraction thereof is the applicable minimum monthly charge for the capacity made available to the Customer.

- All applicable Non-Recurring Charges for the service will be billed in addition to the Minimum Period Charge.

5.2.4 DISCONTINUANCE OF SERVICE

A customer may discontinue an Access Service at any time. The Company requires two business days notice to discontinue an Access Service. The notice can be written or verbal; however, a verbal notice must be followed by a written confirmation within ten days. The notice period will begin at the time of a verbal notice. If there is no verbal notice, the notice period begins at the time the written request is received.

6. SWITCHED ACCESS SERVICE

SUBJECT	PAGE
Acceptance Testing	10
Automatic Number Identification (ANI)	13
Common Switching Optional Features	13
Description and Application of Rates and Charges	19
Description of Feature Group D (FGD)	12
Design and Traffic Routing of Switched Access Service	15
Design Blocking Probability	17
Design of Switched Access Services	19
Feature Group D Usage Measurement	27
General	1
Local Switching	8
Measuring Access Minutes	26
Mileage Measurement	28
Minimum Monthly Charge	25
Minimum Periods	25
Moves	26
Network Management	15
Obligations of the Company	15
Obligations of the Customer	18
Ordering Options and Conditions	10
Ordering Requirements	18

6. SWITCHED ACCESS SERVICE

SUBJECT	PAGE
Provision and Description of Switched Access Service	11
Provision of Service Performance Data	16
Provision of Switched Access Service	11
Rate Categories	3
Diagram	5
Rate Terms and Conditions	19
Rates and Charges	29
Switched Recurring Rates	29
Nonrecurring Rates	30
Report Requirements	18
Service Class Routing	14
Switched Access Service Arrangements and Manner of Provision	2
Switched Transport	6
Transmission Specifications	14
Trunk Group Measurement Reports	
Company	16
Customer	19

6. SWITCHED ACCESS SERVICE

6.1 GENERAL

Feature Group D (FGD) Switched Access Service, which is available to customers for their use in furnishing their services to end users, provides a two-point electrical communications path between a customer's premises and an end user's premises via a LEC tandem. It provides for the use of terminating, switching, transport facilities and common subscriber plant of the Company.

Switched Access Service provides for the ability to originate calls from an end user's premises to a customer's premises, and to terminate calls from a customer's premises to an end user's premises in the LATA where it is provided.

Rates and charges for Switched Access Service are set forth in Section 6.8, following. The application of rates for Switched Access Service is described in 6.7, following.

6. SWITCHED ACCESS SERVICE

6.1 GENERAL (Cont'd)

6.1.1 SWITCHED ACCESS SERVICE ARRANGEMENTS AND MANNER OF PROVISION

A. FGD is furnished on a per trunk basis.

B. Trunks are differentiated by type and directionality of traffic carried over a Switched Access Service arrangement. Differentiation among traffic types is necessary for the Company to design Switched Access Service properly to meet the traffic carrying capacity requirement of the customer.

C. There are two major traffic types:

1. Originating traffic type represents access capacity within a LATA for carrying traffic from the Company's end user to the customer.

2. Terminating traffic type represents access capacity within a LATA for carrying traffic from the customer to the Company's end user.

When ordering capacity for Trunkside Switched Access, the customer must, at a minimum, specify such access capacity in terms of Originating and/or Terminating traffic type.

6. SWITCHED ACCESS SERVICE

6.1 GENERAL (Cont'd)

6.1.2 RATE CATEGORIES

The three rate categories which apply to the Company's Switched Access Service:

- Switched Transport (described in 6.1.2.A., following).
- Local Switching (described in 6.1.2.B., following).
- Common Line (described in Section 3, preceding).

6. SWITCHED ACCESS SERVICE

6.1 GENERAL
6.1.2 RATE CATEGORIES (Cont'd)

The following diagram, in combination with the billing described in Section 2.4.8, depict a possible serving arrangement and components of Switched Access Service and the manner in which the components are combined to provide a complete access service. LEC Tandem Routing is used when the customer is indirectly connected to the Company's end office via a LEC tandem. The following diagram is not intended to depict all serving arrangements available.

6. SWITCHED ACCESS SERVICE

6.1 GENERAL
6.1.2 RATE CATEGORIES (Cont'd)

EXAMPLE 1

Switched Access Service Ordered with LEC Tandem Routing

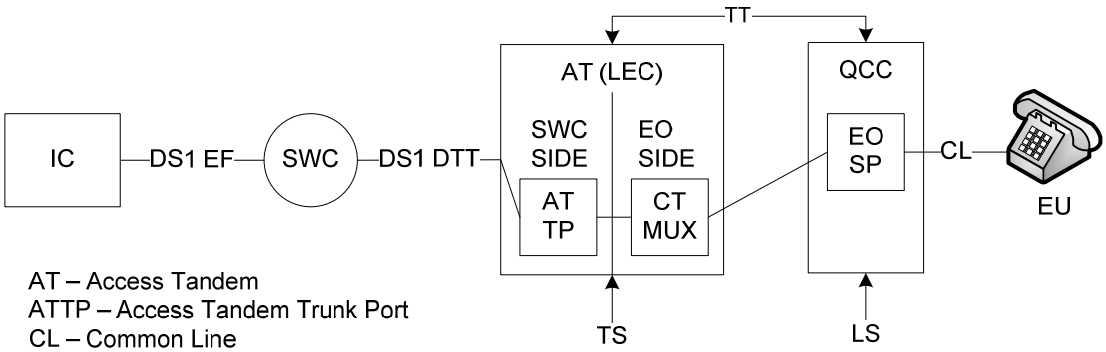

AT – Access Tandem
ATTP – Access Tandem Trunk Port
CL – Common Line
CT MUX – Common Transport Multiplexer
DTT – Direct Trunked Transport
EF – Entrance Facility
EO – End Office
EO SP – End Office Shared Port
EU – End User
IC – Interexchange Carrier
LEC – Local Exchange Carrier
LS – Local Switching
MUX – Multiplexer
SWC – Serving Wire Center
TS – Tandem Switching
TT – Tandem Transmission

6. SWITCHED ACCESS SERVICE

6.1 GENERAL
6.1.2 RATE CATEGORIES (Cont'd)

A. Switched Transport

1. General Description

The Switched Transport rate category provides the transmission facilities between the customer's premises and the end office switch(s) where the customer's traffic is switched to originate or terminate its communications. The Switched Transport rate category provides the transmission facilities between the customer's premises and a LEC tandem.

Switched Transport is a two-way voice-frequency transmission path composed of an Entrance Facility (EF) and a Direct-Trunked Transport (DTT) facility to the tandem and Tandem-Switched Transport (TST) from the tandem to the subtending end offices. The transmission path permits the transport of calls in the originating direction (from the end user's end office switch to the customer's premises) and in the terminating direction (from the customer's premises to the end office switch), but not simultaneously. The voice-frequency transmission path may be comprised of any form or configuration of plant capable of and typically used in the telecommunications industry for the transmission of voice and associated telephone signals within the frequency bandwidth of approximately 300 to 3000 Hz.

When LEC tandem routing is utilized, the Company will provide Tandem Switched Transport and work cooperatively with the customer in determining the directionality of the service.

Switched Transport is provided at the rates and charges set forth in Section 6.8, following. The application of these rates with respect to the different types of service is as set forth in 6.7.1, following.

Switched Access is ordered under the access order provisions as set forth in Section 5, preceding. Design and traffic routing of Switched Access Service is described in 6.5.2, following.

6. SWITCHED ACCESS SERVICE

6.1 GENERAL

6.1.2 RATE CATEGORIES

A. Switched Transport (Cont'd)

2. Switched Transport TST Rate Category

TST provides the transmission facilities between a LEC tandem and the Company's end offices subtending that tandem. For TST, the Company will determine the type of facilities to the end office(s) based on the customer's order for service on a per-trunk basis.

The TST rate category is composed of the Tandem Transmission rate element, a fixed per-MOU rate and per-mile/per-MOU rate. The fixed rate provides for the circuit equipment at the end of the interoffice transmission paths. The per-mile rate provides for the transmission facilities, including intermediate transmission circuit equipment between the end points of the interoffice circuit. For purposes of determining the per-mile rate, mileage will be measured as airline mileage using the V & H coordinates method. Mileage measurement rules are set forth in 6.7.7, and rates and charges are set forth in Section 6.8, following.

6. SWITCHED ACCESS SERVICE

6.1 GENERAL
6.1.2 RATE CATEGORIES (Cont'd)

B. Local Switching

The Local Switching rate category provides the local end office switching, end user line termination and intercept functions necessary to complete the transmission of Switched Access Communications to and from the end users served by the local end office. The Local Switching rate categories are described following. Local Switching rates are set forth in Section 6.8. The application of these rates with respect to the different types of service are set forth in 6.7.1, following.

1. Local End Office Switching Functions

a. Common Switching

Common Switching provides the local end office switching functions. Included as part of Common Switching are optional features which the customer can order. These optional features are described in 6.3.1, following.

b. Transport Termination

Transport Termination provides for the trunkside arrangements which terminate the Switched Transport facilities.

6. SWITCHED ACCESS SERVICE

6.1 GENERAL

6.1.2 RATE CATEGORIES

B. Local Switching (Cont'd)

2. Local Switching Rate Categories

a. Local Switching per MOU rate elements applies to originating and terminating minutes.

b. End Office Shared Port

The End Office Shared Port rate provides for the termination of Tandem Transmission trunks in the shared end office ports. The End Office Shared Port is assessed on a per MOU basis to all trunkside originating and terminating access minutes utilizing tandem routing to an end office.

6. SWITCHED ACCESS SERVICE

6.1 GENERAL (Cont'd)

6.1.3 ACCEPTANCE TESTING

At no additional charge, the Company will perform acceptance testing at the time of installation. Acceptance tests will be performed to insure that the service is operational and meets applicable technical parameters. The Company will, at the customer's request, schedule a mutually agreeable time to perform acceptance testing in cooperation with the customer. If the customer is unable to participate in the acceptance testing, or if the customer requests that service installation be completed, without their presence, the service is assumed to be accepted (i.e., blind acceptance) by the customer.

6.1.4 ORDERING OPTIONS AND CONDITIONS

Switched Access Service is ordered under the Access Order provisions set forth in Section 5, preceding.

6. SWITCHED ACCESS SERVICE

6.2 PROVISION AND DESCRIPTION OF SWITCHED ACCESS SERVICE

6.2.1 PROVISION OF SWITCHED ACCESS SERVICE

A. Switched Access Service is provided in different serving arrangements. The provision of each type of Switched Access Service requires Switched Transport facilities.

B. Serving arrangements are arranged for either originating, terminating or two-way calling, based on the capacity the customer ordered. Originating calling permits the delivery of calls from the Company's Telephone Exchange Service locations to the customer's premises. Terminating calling permits the delivery of calls from the customer's premises to the Company's Telephone Exchange Service locations. Two-way calling permits the delivery of calls in both directions, but not simultaneously. The Company will determine the type of calling to be provided unless the customer requests that a different type of directional calling is to be provided. In such cases, the Company will work cooperatively with the customer to determine the directionality.

C. Following are detailed descriptions of each of the available Switched Access Services. Each service is described in terms of its specific physical characteristics and calling patterns, the transport provisioning, the transmission specifications with which it is provided, the optional features available for use with it and the standard testing capabilities.

D. Availability and wire center information are as set forth in the National Exchange Carrier Association (N.E.C.A.) Tariff F.C.C No. 4.

6. SWITCHED ACCESS SERVICE

6.2 PROVISION AND DESCRIPTION OF SWITCHED ACCESS SERVICE (Cont'd)

6.2.2 DESCRIPTION OF FEATURE GROUP D (FGD)

A. FGD is provided at Company designated end office switches or at tandem switches.

B. FGD provides a trunkside termination through the use of tandem switch trunk equipment.

C. When Feature Group D is switched through a LEC tandem, the Company's Switched Transport configuration is composed of TST from the tandem to the end offices subtending the tandem.

D. The number dialed by the customer's end user shall be a seven or ten digit number for calls in the North American Numbering Plan (NANP). The form of the numbers dialed by the end user is 1 + NPA + NXX-XXXX.

E. FGD is provided with Transmission Type A1 parameters that are delineated in industry standards and Technical Publications.

F. FGD is provided, in the terminating direction where equipment is available, with ten digit access to milliwatt (102 type) test line.

6. SWITCHED ACCESS SERVICE

6.3 COMMON SWITCHING OPTIONAL FEATURES

Following are descriptions of the various optional features that are available in lieu of, or in addition to, the standard features provided with the Switched Access Services. They are provided as Common Switching options.

6.3.1 AUTOMATIC NUMBER IDENTIFICATION (ANI)

A. This option provides the automatic transmission of a three or ten digit number and information digits to the customer's premises for calls originating in the LATA, to identify the calling station. The three or ten digit numbers will contain the following information: three digit, NPA only and ten digit, NPA+NXX-XXXX. The ANI feature is an end office software function which is associated on a call-by-call basis with trunk groups between a customer's premises routed through an access tandem.

B. Where ANI cannot be provided, information digits will be provided to the customer.

6. SWITCHED ACCESS SERVICE

6.3 COMMON SWITCHING OPTIONAL FEATURES
6.3.1 AUTOMATIC NUMBER IDENTIFICATION (ANI) (Cont'd)

C. ANI information and Charge Number information are provided based on the following requirements:

1. The telephone number and billing information may be used for billing and collection, routing, screening, and completion of the originating subscriber's call or transaction, or for services directly related to the originating subscriber's call or transaction;

2. The ANI information shall not be reused or resold without first (A) notifying the originating subscriber and (B) obtaining the affirmative consent of such subscriber for such reuse or resale; and

3. ANI information shall not be disclosed, except as permitted by (1) and (2), above, for any purpose other than (i) performing the services or transactions that are the subject of the originating subscriber's call, (ii) ensuring network performance security, and the effectiveness of call delivery, (iii) compiling, using and disclosing aggregate information, and (iv) complying with applicable law or legal process.

6.3.2 SERVICE CLASS ROUTING

This option provides the capability of directing originating traffic from an end office to a tandem trunk group to a customer designated premises, based on service access code (e.g., 8XX). It is provided in suitably equipped tandem switches based on technical limitations.

6.4 TRANSMISSION SPECIFICATIONS

Each Switched Access Service transmission path is provided with standard transmission parameter limits for service routed to a tandem.

6. SWITCHED ACCESS SERVICE

6.5 OBLIGATIONS OF THE COMPANY

In addition to the obligations of the Company set forth in Section 2, preceding, the Company has certain other obligations pertaining only to the provision of Switched Access Service. These obligations are as follows:

6.5.1 NETWORK MANAGEMENT

The Company will administer its network to ensure the provision of acceptable service levels to all telecommunications users of the Company's network services.

Generally, service levels are considered acceptable only when Company end users and customers are able to establish connections with little or no delay encountered within the Company network. The Company maintains the right to apply protective controls, i.e., those actions, such as call gapping, which selectively cancel the completion of traffic, over any traffic carried over its network, including that associated with a customer's Switched Access Service. Generally, such protective measures would only be taken as a result of occurrences such as failure or overload of Company or customer facilities, natural disasters, mass calling or national security demands. In the event that the protective controls applied by the Company result in the complete loss of service by the customer, the customer will be granted a Credit Allowance for Service Interruption as set forth in 2.4.5.B., preceding.

6.5.2 DESIGN AND TRAFFIC ROUTING OF SWITCHED ACCESS SERVICE

When ordering Switched Access Service, the customer shall specify on the order for service the number of trunks and the desired directionality (i.e., one-way, two-way). When the customer orders facilities, routing, directionality or optional features different from that determined to be available by the Company, the Company will work cooperatively with the customer in determining an acceptable configuration based on available facilities, equipment and the Company routing plans. Rates and charges for Switched Transport, as set forth in Section 6.8, following, will be applied based on the transport provisioned at the time the order is completed.

6. SWITCHED ACCESS SERVICE

6.5 OBLIGATIONS OF THE COMPANY (Cont'd)

6.5.3 PROVISION OF SERVICE PERFORMANCE DATA

Subject to availability, end-to-end service performance data available to the Company through its own service evaluation routines, may also be made available to the customer based on previously arranged intervals and format. These data provide information on overall end-to-end call completion and non-completion performance, e.g., customer equipment blockage, failure results and transmission performance. These data do not include service performance data which are provided under other Tariff sections, e.g., testing service results. If data are to be provided in other than paper format, the charges for such exchange will be determined on an individual case basis.

6.5.4 TRUNK GROUP MEASUREMENT REPORTS

Subject to availability, the Company will make available trunk group data in the form of usage in CCS, peg count and overflow, to the customer based on previously agreed to intervals.

6. SWITCHED ACCESS SERVICE

6.5 OBLIGATIONS OF THE COMPANY (Cont'd)

6.5.5 DESIGN BLOCKING PROBABILITY

The Company will perform routine measurement functions for the trunks ordered in accordance with Company design blocking criteria to assure that an adequate number of trunks are in service. The Company will recommend that additional trunks be ordered by the customer when additional trunks are required to reduce the measured blocking to the designed blocking level. Where design blocking criteria apply, the design blocking objective is assumed to have been met if the routine measurements show that the measured blocking does not exceed the thresholds listed in the following table.

For transmission paths carrying first-routed traffic between an end office and a customer's premises via a tandem, the measured blocking thresholds are as follows:

NUMBER OF TRANSMISSION PATHS PER TRUNK GROUP	MEASURED BLOCKING THRESHOLDS IN THE TIME CONSISTENT BUSY HOUR FOR THE NUMBER OF MEASUREMENTS PER TRUNK GROUP			
	15-20 MEASURE-MENTS	11-14 MEASURE-MENTS	7-10 MEASURE-MENTS	3-6 MEASURE-MENTS
2	.045	.055	.060	.095
3	.035	.040	.045	.060
4	.035	.040	.045	.055
5-6	.025	.035	.040	.045
7 or more	.020	.025	.030	.040

6. SWITCHED ACCESS SERVICE

6.6 OBLIGATIONS OF THE CUSTOMER

In addition to the obligations of the customer set forth in Section 2, preceding, the customer has certain specific obligations pertaining to the use of Switched Access Service. These obligations are as follows:

6.6.1 ORDERING REQUIREMENTS

When ordering Switched Access Service, the customer shall specify on the order for service, the desired interoffice transport, the number of trunks to be provisioned at the tandem and the desired directionality.

6.6.2 REPORT REQUIREMENTS

Customers are responsible for providing the following reports to the Company, when applicable.

A. Jurisdictional Reports

When a customer orders Switched Access Service for both interstate and intrastate use, the customer is responsible for providing reports as set forth in 2.3.9, preceding. Charges will be apportioned in accordance with those reports. The method to be used for determining the intrastate charges is set forth in 2.3.10, preceding.

B. Code Screening Reports

When a customer orders Service Class Routing, it must report the number of trunks and/or the appropriate codes to be instituted in each tandem switch, for each of the arrangements ordered.

6. SWITCHED ACCESS SERVICE

6.6 OBLIGATIONS OF THE CUSTOMER (Cont'd)

6.6.3 TRUNK GROUP MEASUREMENT REPORTS

With the agreement of the customer, trunk group data in the form of usage in one hundred call seconds (CCS), peg count and overflow for its end of all access trunk groups, where technologically feasible, will be made available to the Company. These data will be used to monitor trunk group utilization and service performance and will be based on previously arranged intervals and format.

6.6.4 DESIGN OF SWITCHED ACCESS SERVICES

When a customer orders Switched Access Service on a per-facility and/or per-trunk basis, it is the customer's responsibility to assure that sufficient access services have been ordered to handle its traffic.

6.7 RATE TERMS AND CONDITIONS

This section contains the specific terms and conditions governing the rates and charges that apply for Switched Access Service.

6.7.1 DESCRIPTION AND APPLICATION OF RATES AND CHARGES

There are two types of rates and charges that apply to Switched Access Service with LEC Tandem Routing. These are usage rates and nonrecurring charges. These rates and charges are applied differently to the various rate elements as set forth, following. Rates are set forth in Section 6.8, Rates and Charges.

A. Usage Rates

Usage rates are rates that apply only when a specific rate element is used. These are applied on a per access minute, a per call or per query basis. Usage rates are accumulated over a monthly period.

6. SWITCHED ACCESS SERVICE

6.7 RATE TERMS AND CONDITIONS
6.7.1 DESCRIPTION AND APPLICATION OF RATES AND CHARGES (Cont'd)

B. Nonrecurring Charges

Nonrecurring charges are one-time charges that apply for a specific work activity (i.e., installation or change to an existing service). The types of nonrecurring charges that apply for Switched Access Service are: installation of service, installation of optional features and service rearrangements. These charges are set forth in Section 6.8, following.

1. Installation of Service

Nonrecurring charges apply for the installation of the individual Feature Group trunk.

a. Switched Access Service is ordered on a trunk basis, the nonrecurring charge is applied per trunk. If a customer orders multiple trunks on the same Access Order, the first trunk is assessed the "first" installation charge and each additional trunk is assessed the "each additional" installation charge per Access Order.

b. Nonrecurring charges for FGD Switched Access Service include one Carrier Identification Code (CIC) on an initial Access Order. The CIC is a uniform numeric code that identifies the customer associated with the Switched Access Service. The customer of the initial CIC is the customer of record for the Switched Access Service. When a customer requests two or more CICs on an initial Access Order, each additional CIC (i.e., two or more) is considered to be a service rearrangement as set forth in 3., following.

6. SWITCHED ACCESS SERVICE

6.7 RATE TERMS AND CONDITIONS

6.7.1 DESCRIPTION AND APPLICATION OF RATES AND CHARGES

B. Nonrecurring Charges (Cont'd)

2. Installation of Optional Features

   Nonrecurring charges may apply for the installation of some of the optional features available with Switched Access Service. The charge applies whether the feature is installed coincident with the initial installation of service or at any time subsequent to the initial installation of service.

3. Service Rearrangements

   Service rearrangements are changes to existing services installed which do not result in either a change in the minimum period requirements as set forth in 5.2.3, preceding, or a change in the physical location of the POT at a customer's premises or a customer's end user's premises. Changes which result in the establishment of new minimum period obligations are treated as disconnects and starts. Changes in the physical location of the POT are treated as moves and are described and charged for as set forth in 6.7.4, following.

   The charge to the customer for the service rearrangement is dependent on whether the change is administrative only in nature or involves an actual technical and/or physical change to the service.

6. SWITCHED ACCESS SERVICE

6.7 RATE TERMS AND CONDITIONS

6.7.1 DESCRIPTION AND APPLICATION OF RATES AND CHARGES

B. Nonrecurring Charges

3. Service Rearrangements (Cont'd)

a. Administrative changes will be made without charge(s) to the customer. Administrative changes are as follows:

- Change of customer name, (i.e., the customer of record does not change, but rather the customer of record changes its name, e.g., XYZ Company to XYZ Communications),
- Change of customer name as the result of a transfer of use of service as set forth in 2.1.2, preceding,
- Change of customer or customer's end user's premises address when the change of address is not a result of a physical relocation of equipment,
- Change in billing data (name, address or contact name or telephone number),
- Change of agency authorization,
- Change of customer circuit identification,
- Change of billing account number,
- Change of customer test line number,
- Change of customer or customer's end user's contact name or telephone number, and
- Change of jurisdiction.

6. SWITCHED ACCESS SERVICE

6.7 RATE TERMS AND CONDITIONS

6.7.1 DESCRIPTION AND APPLICATION OF RATES AND CHARGES

B. Nonrecurring Charges

3. Service Rearrangements (Cont'd)

b. All other service rearrangements will be charged for as follows:

- If the change involves the addition of or a modification to an optional feature which has a separate nonrecurring charge, that nonrecurring charge will apply.

- If, due to an office replacement, a customer requests conversion from one-way to two-way trunks, and the request is made six months in advance of the office replacement due date, the nonrecurring charges will not apply.

- For all other changes, including the addition of, or modifications to optional features without separate nonrecurring charges, a charge equal to one-half the Switched Transport per trunk nonrecurring (i.e., installation) charge will apply. This one-half nonrecurring charge is assessed the "first" installation charge for the first trunk and each additional trunk is assessed the "each additional" installation charge, per Access Order. If two or more optional features and changes are ordered on the same Access Order, the optional feature or change requiring the lowest level of work activity will apply. A maximum one-half nonrecurring charge will apply per Access Order for service rearrangements.

- If a feature is not required on each trunk, but rather for an entire hunt or trunk group, only one such charge will apply (i.e., it will not apply per trunk). This one-half nonrecurring charge is assessed the "first" installation charge for the first hunt group, trunk group or end office. Each additional hunt group, trunk group or end office is assessed the "each additional" installation charge, per Access Order. Nonrecurring charges for service rearrangements are specified in Section 6.8, following.

6. SWITCHED ACCESS SERVICE

6.7 RATE TERMS AND CONDITIONS

6.7.1 DESCRIPTION AND APPLICATION OF RATES AND CHARGES

B. Nonrecurring Charges

3. Service Rearrangements

b. All other service rearrangements will be charged for as follows: (Cont'd)

- Nonrecurring charges for additional (i.e., two or more) CICs are determined based on whether the FGD trunk(s) or trunk group(s) are new or existing, and the level of work activity (i.e., trunk, trunk group, and/or tandem).

  - When the trunk or trunk group is new, one CIC is included in the nonrecurring charges for the initial Access Order. Each additional CIC requested on the same Access Order is assessed one-half the "each additional" installation charge assessed. In addition, the charge is based on the lowest level of work, per Access Order, per LATA. The additional (i.e., two or more) CIC service rearrangement charge is in addition to Installation Charge(s) for the trunk(s).

  - When the FGD trunk group is existing service and the customer is requesting additional CICs on an existing tandem-routed trunk group, the customer is charged one-half the "first" installation charge. Each "additional" CIC after the "first additional" CIC on the same Access Order is charged one-half the "each additional" installation charge, per LATA.

C. Application of Rates

Tandem Switched Transport and Local Switching usage rates are applied per access minute. The terminating Local Switching rate applies to all terminating access minutes of use. The originating Local Switching rate applies to all originating access minutes of use.

6. SWITCHED ACCESS SERVICE

6.7 RATE TERMS AND CONDITIONS
6.7.1 DESCRIPTION AND APPLICATION OF RATES AND CHARGES (Cont'd)

D. Tandem-Switched Transport

The TST rate category is composed of Tandem Transmission. Mileage measurement is described in 6.7.7., following. Rates and charges are set forth in Section 6.8, following.

1. Tandem Transmission

The Tandem Transmission rates are assessed on a per-MOU basis when tandem routing is provided for trunkside services. A fixed rate and a rate per mile, per minute apply.

6.7.2 MINIMUM PERIODS

Minimum periods for Switched Access Service are described in 5.2.3, preceding.

6.7.3 MINIMUM MONTHLY CHARGE

Switched Access Service is subject to a minimum monthly charge. The minimum charge applies for the total capacity provided. The minimum monthly charge for usage rated elements is the sum of the charges set forth in Section 6.8, following, for the measured or assumed usage for the month.

6. SWITCHED ACCESS SERVICE

6.7 RATE TERMS AND CONDITIONS (Cont'd)

6.7.4 MOVES

The charges for a move or reconfiguration are dependent on whether the move or reconfiguration is within the same SWC. New minimum period requirements will be established for moved or reconfigured services. Any changes to the existing Switched Access facilities, trunks and optional features as they exist at the current location, excluding a change in Circuit Facility Assignment (CFA), made in conjunction with a move or reconfiguration, will be treated as a discontinuance and a start of new service and all associated nonrecurring installation charges will apply. The addition of lines and trunks made in conjunction with a move or reconfiguration will be treated as a start of new service and all associated nonrecurring installation charges and new minimum period requirements will apply. The customer will also remain responsible for satisfying all outstanding minimum period charges for any disconnected service as the result of a move or reconfiguration.

6.7.5 MEASURING ACCESS MINUTES

Customer traffic to or from Company end office switches will be measured (i.e., recorded) by the Company at end office switches. The measured minutes are the chargeable access minutes.

6. SWITCHED ACCESS SERVICE

6.7 RATE TERMS AND CONDITIONS (Cont'd)

6.7.6 FEATURE GROUP D USAGE MEASUREMENT

FGD access minutes or fractions thereof, the exact value of the fraction being a function of the switch technology where the measurement is made, are accumulated over the billing period for each tandem, and are then rounded up to the nearest access minute for each tandem.

The following assumed minutes are used in the computation of Switched Access Service charges.

A. Originating Usage Measurement

Out of Band SS7 Signaling

- For originating calls over FGD, usage measurement begins when the FGD entry switch receives an Exit Message (EXM).
- The measurement of originating call usage over FGD with SS7 out of band signaling ends when a Release Message is sent or received by the originating end user's end office, whichever occurs first.

B. Terminating Usage Measurement

- For terminating calls over FGD, the measurement of access minutes begins when the terminating FGD entry switch receives answer supervision from the Company end office, indicating the terminating end user has answered.
- The measurement of terminating call usage over FGD ends when the terminating FGD entry switch receives disconnect supervision from the Company end office, indicating the terminating end user has disconnected, or the customer's POT, whichever is recognized first by the entry switch.

6. SWITCHED ACCESS SERVICE

6.7 RATE TERMS AND CONDITIONS (Cont'd)

6.7.7 MILEAGE MEASUREMENT

The mileage to be used to determine the Switched Transport rate for traffic is calculated on the airline distance between the end office switch, where the call originates or terminates and the access tandem. The V&H coordinates method is used to determine mileage. This method is set forth in the National Exchange Carrier Association, Inc. Tariff F.C.C. No. 4 for Wire Center Information (V & H coordinates).

Mileage rates are shown in Section 6.8, following. If the V & H calculation results in a fraction of a mile, always round up to the next whole mile for rate application.

6. SWITCHED ACCESS SERVICE

6.8 RATES AND CHARGES[1]

6.8.1 SWITCHED RECURRING RATES

A. Tandem-Switched Transport Usage Rates

	RATE PER ACCESS MINUTE FIXED	PER MILE
• Tandem Transmission:		
Facility Termination		
- Originating	$0.000168	$0.000020
- Termination	$0.000168	$0.000020

B. Local Switching

	RATE PER ACCESS MINUTE
• Local End Office Switching:	
- Originating	$0.002126
- Termination	$0.002126
• End Office Shared Port	
- Originating	$0.000800
- Termination	$0.000800

[1] The rates and charges set forth in this Tariff do not exceed the incumbent (BellSouth Telecommunications F.C.C. No. 1) rates pursuant to FCC rules.

6. SWITCHED ACCESS SERVICE

6.8 RATES AND CHARGES[1] (Cont'd)

6.8.2 NONRECURRING RATES

A. Trunk Installation

	NONRECURRING CHARGE
• First trunk	$101.52
• Each additional trunk	51.27

B. Moves within the Same Serving Wire Center

Switched Access Service, per trunk

• First trunk	101.52
• Each additional trunk	51.27

[1] The rates and charges set forth in this Tariff do not exceed the incumbent (BellSouth Telecommunications F.C.C. No. 1) rates pursuant to FCC rules.