Windstream South Carolina, Inc.

Title Page
1st Revised Title Page 1
Cancels Original Title Page 1

ISSUED: December 6, 2007

EFFECTIVE: December 6, 2007

BY: Vice President

Regulations, Rates and Charges
applying to the provision of Access Services
for Intrastate Customers within
the operating territory of

Windstream South Carolina, LLC (C)

in the State of South Carolina
as provided herein.

Any Questions concerning tariff references,
should be directed to this tariffs
issuing individual at the address
indicated below:

Mr. Chris Cranford, Manager - Tariffs
Windstream Corporation
4001 Rodney Parham Rd.
Little Rock, Arkansas 72212

Whenever in this Tariff the name Windstream South Carolina, Inc., Windstream South (N)
Carolina or the term Telephone Company appears, that reference shall be deemed to (N)
refer to Windstream South Carolina LLC. (N)

APPROVED FOR FILING - THE PUBLIC SERVICE COMMISSION OF SOUTH CAROLINA - JULY 15, 2014

Table of Contents

	Page No
TABLE OF CONTENTS	1
ISSUING CARRIERS	3
CONCURRING CARRIERS	3
CONNECTING CARRIERS	3
OTHER PARTICIPATING CARRIERS	3
REGISTERED SERVICE MARKS	3
REGISTERED TRADEMARKS	3
EXPLANATION OF SYMBOLS	4
EXPLANATION OF ABBREVIATIONS	4
REFERENCE TO OTHER TARIFFS	6
REFERENCE TO TECHNICAL PUBLICATIONS	6

APPROVED FOR FILING - THE PUBLIC SERVICE COMMISSION OF SOUTH CAROLINA - JULY 15, 2014

Table of Contents

		Page No
1.	APPLICATION OF TARIFF	Section 1
2.	GENERAL REGULATIONS	Section 2
3.	CARRIER COMMON LINE ACCESS SERVICE	Section 3
4.	RESERVED FOR FUTURE USE	Section 4
5.	ACCESS ORDERING	Section 5
6.	SWITCHED ACCESS SERVICE	Section 6
7.	SPECIAL ACCESS SERVICE	Section 7
8.	RESERVED FOR FUTURE USE	Section 8
9.	DIRECTORY ASSISTANCE SERVICE	Section 9
10.	RESERVED FOR FUTURE USE	Section 10
11.	SPECIAL FACILITIES ROUTING OF ACCESS SERVICES	Section 11
12.	SPECIALIZED SERVICE OR ARRANGEMENTS	Section 12
13.	ADDITIONAL ENGINEERING, ADDITIONAL LABOR AND MISCELLANEOUS SERVICES	Section 13
14.	EXCEPTIONS TO ACCESS SERVICE OFFERINGS	Section 14
15.	ACCESS SERVICE INTERFACES AND TRANSMISSION SPECIFICATIONS	Section 15
16.	RESERVED FOR FUTURE USE	Section 16
17.	RATES AND CHARGES	Section 17

APPROVED FOR FILING - THE PUBLIC SERVICE COMMISSION OF SOUTH CAROLINA - JULY 15, 2014

Table of Contents

ISSUING CARRIERS

Windstream South Carolina, Inc.
106 North Church Street
P.O. Box 1048
Lexington, South Carolina 29072

CONCURRING CARRIERS

NO CONCURRING CARRIERS

CONNECTING CARRIERS

NO CONNECTING CARRIERS

OTHER PARTICIPATING CARRIERS

NO OTHER PARTICIPATING CARRIERS

REGISTERED SERVICE MARKS	REGISTERED TRADEMARKS
NONE	NONE

APPROVED FOR FILING - THE PUBLIC SERVICE COMMISSION OF SOUTH CAROLINA - JULY 15, 2014

Table of Contents

EXPLANATION OF SYMBOLS

(D) - To signify discontinued rate or deleted regulation
(I) - To signify increase in a rate
(M) - To signify move from another Tariff page without change
(N) - To signify new rate or regulation
(R) - To signify reduction to a rate or charge
(T) - To signify a change in text but no change in rate or regulation

EXPLANATION OF ABBREVIATIONS

ADA - Abbreviated Dialing Arrangement
AML - Actual Measured Loss
ANI - Automatic Number Identification
AP - Program Audio
AT&T - American Telephone and Telegraph Company
BHMC - Busy Hour Minutes of Capacity
CCS - Common Channel Signaling
CDP - Customer Designated Premises
CI - Channel Interface
CNP - Charge Number Parameter
CO - Central Office
Cont'd - Continued
CPE - Customer Provided Equipment
CPN - Calling Party Number
CSP - Carrier Selection Parameter

DA - Directory Assistance
dB - decibel
dBrnC - Decibel Reference Noise C-Message Weighting
dBrnCO - Decibel Reference Noise C-Message Weighted O
dc - direct current
DDD - Direct Distance Dialing
EAS - Extended Area Service
EDD - Envelope Delay Distortion
EML - Expected Measured Loss
EPL - Echo Path Loss
ERL - Echo Return Loss
ESS - Electronic Switching System
ESSX - Electronic Switching System Exchange
f - frequency
FCC - Federal Communications Commission

APPROVED FOR FILING - THE PUBLIC SERVICE COMMISSION OF SOUTH CAROLINA - JULY 15, 2014

Table of Contents

EXPLANATION OF ABBREVIATIONS (Cont'd)

HC	-	High Capacity
Hz	-	Hertz
IC	-	Interexchange Carrier
ICB	-	Individual Case Basis
ICL	-	Inserted Connection Loss
kbps	-	kilobits per second
kHz	-	kilohertz
LATA	-	Local Access and Transport Area
ma	-	milliamperes
Mbps	-	Megabits per second
mcs	-	Microsecond
MHz	-	Megahertz
MRC	-	Monthly Recurring Charge
MT	-	Metallic
MTS	-	Message Telecommunications Service(s)
NPA	-	Numbering Plan Area
NRC	-	Nonrecurring Charge
NXX	-	Three-Digit Central Office Prefix
PBX	-	Private Branch Exchange
PIC	-	Presubscribed Interexchange Carrier
POT	-	Point of Termination
SAC	-	Service Access Code
SNAL	-	Signaling Network Access Line
SP	-	Signaling Point
SPOI	-	Signaling Point of Interface
SRL	-	Singing Return Loss
SSP	-	Service Switching Point
SS7	-	Signaling System 7
STP	-	Signal Transfer Point
SWC	-	Serving Wire Center
TG	-	Telegraph Grade
TLP	-	Transmission Level Point
TV	-	Television
VG	-	Voice Grade
V & H	-	Vertical & Horizontal
WATS	-	Wide Area Telecommunications Service(s)
WSC	-	Wireless Switching Center
WSO	-	WATS Serving Office

APPROVED FOR FILING - THE PUBLIC SERVICE COMMISSION OF SOUTH CAROLINA - JULY 15, 2014

Table of Contents

REFERENCE TO OTHER TARIFFS

Whenever reference is made to the FCC the PSC should be substituted. This tariff has been filed as an intrastate version of an interstate tariff. Should there be discrepancies or minor irregularities, the intent of the tariff shall apply.

Whenever reference is made in this tariff to other tariffs of the Telephone Company, the reference is to the tariffs in force as of the effective date of this tariff, and to amendments thereto and successive issues thereof.

The following tariff is referenced in this tariff and may be obtained from the Federal Communications Commission's commercial contractor.

National Exchange Carrier
Association, Inc.
Special Construction
Tariff F.C.C. No. 3

National Exchange Carrier
Association, Inc.
Wire Center Information
Tariff F.C.C. No. 4

REFERENCE TO TECHNICAL PUBLICATIONS

The following technical publications are referenced in this tariff and may be obtained from Bell Communications Research, Inc., Customer Services, 60 New England Ave., Piscataway, NJ 08854-4196.

Technical Reference:

Multiple Exchange Carrier Access Billing (MECAB) Guidelines
Issued: August 30994

Multiple Exchange Carrier Ordering and Design (MECOD) Guidelines
Issued: May 1994

PUB 41004 Data Communications Using Voiceband Private Line Channels
Issued: October, 1973

PUB 62310 (MDP-326-726) Digital Data System Channel Interface Specification
Issued: September, 1983

PUB 62411 High Capacity Digital Service Channel Interface
Issued: September, 1983, Addendum October 1984

TR-NPL-000258 Compatibility Information for Feature Group D Switched Access Service
Issued: October 1985

TR-NWT-000334 Issue 2 Voice Grade Switched Access Service - Transmission Parameter Limits and Interface Combinations

Issued: September, 1990

APPROVED FOR FILING - THE PUBLIC SERVICE COMMISSION OF SOUTH CAROLINA - JULY 15, 2014

Table of Contents

REFERENCE TO TECHNICAL PUBLICATIONS (Cont'd)

TR-TSY-000335, Issue 2 Voice Grade Special Access - Transmission Parameter Limits and Interface Combinations
Issued: May, 1990

TR-NPL-000336 Metallic and Telegraph Grade Special Access Services Transmission Parameter Limits and interface combinations
Issued: October, 1987

TR-NPL-000337 Program Audio Special Access Service and Local Channel Services
Issued: October, 1987

TR-NPL-000338 Television Special Access and Local Channel Services Transmission Parameter Limits and Interface Combinations
Issued: December, 1986

TR-NWT-000341 Digital Data Special Access Service - Transmission Parameter Limits and Interface Combinations
Issued: Issue 2, February, 1993

TR-INS-000342 High Capacity Digital Special Access Service
Issued: February, 1991

SR-STS-000307 Issue 5 NC/NCI Code Dictionary
Issued: May, 1994

TR-TSY-000506 LATA Switching Systems Generic Requirements (LSSGR)
Section 6
Issued: October 1987, Revised December 1988, Revised August 30990

TR-NPL-000054 High Capacity Digital Service (1.544 Mbs) Interface Generic Requirements for End Users
Issued: April 1989
Available: April 1989

TR-TSV-000905 Common Channel Signaling Network Interface Specification
Supplement 1
Available: August 30989

The following technical publication is referenced in this tariff and may be obtained from the Bell Communications Technical Education Center, Room B02, 6200 Route 53, Lisle, IL. 60532.

Telecommunications Transmission Engineering
Volume 3 - Networks and Services (Chapters 6 and 7)
Second Edition, 1980
Issued: August, 1980
Filed under authority of Special Permission No. 92-810 of the Federal Communications Commission.

APPROVED FOR FILING - THE PUBLIC SERVICE COMMISSION OF SOUTH CAROLINA - JULY 15, 2014

Table of Contents

REFERENCE TO TECHNICAL PUBLICATIONS (Cont'd)

The following technical publication is referenced in this tariff and may be obtained from the National Exchange Carrier Association, Inc., Director - Access Tariff, 100 So. Jefferson Road, Whippany, NJ 07981 and the Federal Communications Commission's commercial contractor.

PUB AS No. 1, Issue II Access Service
Issued: May 1984
Addendum: March 1987

The following publications are referenced in this tariff and may be obtained from the Government Printing Office, Superintendent of Documents, Document Control Branch, 941 N. Capital St., N.E., Washington, D.C. 20401.

Telecommunications Service Priority (TSP) System for National Security Emergency Preparedness (NSEP) Service Vendor Handbook, National Communications System (NCSH 3-1-2).

Issued: October 1990
Available: August 30990

Telecommunication Service Priority (TSP) System for National Security Emergency Preparedness (NSEP) Service User Manual, National Communications System (NCSM 3-1-1).

Issued: October 1990
Available: August 30990

The following publication is referenced in this tariff and may be obtained from Director-Sales Operations, Integrated Network Corporation, P.O. Box 6875, Bridgewater, N.J. 08807

Integrated Network Corporation
Document CB-INC-100
Available: August 30990

The following publication is referenced in this tariff and may be obtained from AT&T, 26 Parsippany Road, Whippany, N.J. 07981

AT&T PUB 62310
(and its Addendum 2 and Addendum 3)
Available: October 1989

APPROVED FOR FILING - THE PUBLIC SERVICE COMMISSION OF SOUTH CAROLINA - JULY 15, 2014

Application of Tariff

CONTENTS

Page No.

1. APPLICATION OF TARIFF 1

APPROVED FOR FILING - THE PUBLIC SERVICE COMMISSION OF SOUTH CAROLINA - JULY 15, 2014

Application of Tariff

1.1 This tariff contains regulations, rates and charges applicable to the provision of Carrier Common Line, Switched Access, Special Access and other miscellaneous services, hereinafter referred to collectively as service(s). These services are provided to customers by the Issuing Carriers of this tariff, hereinafter the Telephone Company. This tariff also contains Access Ordering regulations and changes that are applicable when these services are ordered or modified by the customer.

1.2 The provision of such services by the Telephone Company as set forth in this tariff does not constitute a joint undertaking with the customer for the furnishing of any service.

1.3 Reserved For Future Use

APPROVED FOR FILING - THE PUBLIC SERVICE COMMISSION OF SOUTH CAROLINA - JULY 15, 2014

General Regulations

CONTENTS

			Page No.
2.1	Undertaking of the Telephone Company		1
	2.1.1	Scope	1
	2.1.2	Limitations	1
	2.1.3	Liability	3
	2.1.4	Provision of Services	7
	2.1.5	Facility Terminations	7
	2.1.6	Service Maintenance	7
	2.1.7	Changes and Substitutions	8
	2.1.8	Refusal and Discontinuance of Service	9
	2.1.9	Notification of Service-Affecting Activities	12
	2.1.10	Coordination with Respect to Network	12
	2.1.11	Provision and Ownership of Telephone Numbers	12
2.2	Use		13
	2.2.1	Interference or Impairment	13
	2.2.2	Unlawful and Abusive Use	13
2.3	Obligations of the Customer		14
	2.3.1	Damages	14
	2.3.2	Ownership of Facilities and Theft	14
	2.3.3	Equipment Space and Power	15
	2.3.4	Availability for Testing	15
	2.3.5	Limitation of Use of Metallic Facilities	15
	2.3.6	Balance	16
	2.3.7	Design of Customer Services	16
	2.3.8	References to the Telephone Company	16
	2.3.9	Claims and Demands for Damages	17
	2.3.10	Coordination with Respect to Network Contingencies	18
	2.3.11	Jurisdictional Report and Certification Requirements	18
	2.3.12	Determination of Intrastate Charges for Mixed Interstate and Intrastate Switched Access Service	27
	2.3.13	Proof of Certification	28
2.4	Payment Arrangements and Credit Allowances		29
	2.4.1	Payment of Rates, Charges and Deposits	29
	2.4.2	Minimum Periods	36
	2.4.3	Cancellation of an Order for Service	37
	2.4.4	Credit Allowance for Service Interruptions	37
	2.4.5	Re-establishment of Service Following Fire, Flood or Other Occurrence	44
	2.4.6	Title or Ownership Rights	45
	2.4.7	Access Service Provided By More Than One Telephone Company	45
2.5	Connections		61
2.6	Definitions		62

APPROVED FOR FILING - THE PUBLIC SERVICE COMMISSION OF SOUTH CAROLINA - JULY 15, 2014

General Regulations

2.1 Undertaking of the Telephone Company

2.1.1 Scope

(A) The Telephone Company does not undertake to transmit messages under this tariff.

(B) The Telephone Company shall be responsible only for the installation, operation and maintenance of the services it provides.

(C) The Telephone Company will, for maintenance purposes, test its services only to the extent necessary to detect and/or clear troubles.

(D) Services are provided 24 hours daily, seven days per week, except as set forth in other applicable sections of this tariff.

(E) The Telephone Company does not warrant that its facilities and services meet standards other than those set forth in this tariff.

2.1.2 Limitations

(A) Assignment or Transfer of Services

The customer may assign or transfer the use of services provided under this tariff only where there is no interruption of use or relocation of the services. Such assignment or transfer may be made to:

(1) another customer, whether an individual, partnership, association or corporation, provided the assignee or transferee assumes all outstanding indebtedness for such services, and the unexpired portion of the minimum period and the termination liability applicable to such services, if any; or

APPROVED FOR FILING - THE PUBLIC SERVICE COMMISSION OF SOUTH CAROLINA - JULY 15, 2014

General Regulations

2.1 Undertaking of the Telephone Company (Cont'd)

2.1.2 Limitations (Cont'd)

(A) Assignment or Transfer of Services (Cont'd)

(2) a court-appointed receiver, trustee or other person acting pursuant to law in bankruptcy, receivership, reorganization, insolvency, liquidation or other similar proceedings, provided the assignee or transferee assumes the unexpired portion of the minimum period and the termination liability applicable to such services, if any.

In all cases of assignment or transfer, the written acknowledgment of the Telephone Company is required prior to such assignment or transfer. This acknowledgment shall be made within 15 days from the receipt of notification. All regulations and conditions contained in this tariff shall apply to such assignee or transferee.

The assignment or transfer of services does not relieve or discharge the assignor or transferor from remaining jointly or severally liable with the assignee or transferee for any obligations existing at the time of the assignment or transfer.

(B) Use and Restoration of Services

The use and restoration of services shall be in accordance with Part 64, Subpart D, Appendix A, of the Federal Communications Commission's Rules and Regulations, which specifies the priority system for such activities.

APPROVED FOR FILING - THE PUBLIC SERVICE COMMISSION OF SOUTH CAROLINA - JULY 15, 2014

General Regulations

2.1 Undertaking of the Telephone Company (Cont'd)

2.1.2 Limitations (Cont'd)

(C) Sequence of Provisioning (Cont'd)

Subject to compliance with the rules mentioned in (B) preceding, the services offered herein will be provided to customers on a first-come, first-served basis.

The first-come, first-served sequence shall be based upon the received time and date officially recorded, by stamp or other notation, by the Telephone Company on customer access orders. These orders must contain all the information as required for each respective service as delineated in other sections of this tariff. Customer orders shall not be deemed to have been received until such information is provided. Should questions arise which preclude order issuance due to missing information or the need for clarification, the Telephone Company will attempt to seek such missing information or clarification on a verbal basis.

2.1.3 Liability

(A) Limits of Liability

The Telephone Company's liability, if any, for its willful misconduct is not limited by this tariff. With respect to any other claim or suit, by a customer or by any others, for damages associated with the installation, provision, termination, maintenance, repair or restoration of service, and subject to the provisions of (B) through (G) following, the Telephone Company's liability if any, shall not exceed an amount equal to the proportionate charge for the service for the period during which the service was affected. This liability for damages shall be in addition to any amounts that may otherwise be due the customer under this tariff as a Credit Allowance for a Service Interruption.

APPROVED FOR FILING - THE PUBLIC SERVICE COMMISSION OF SOUTH CAROLINA - JULY 15, 2014

General Regulations

2.1 Undertaking of the Telephone Company (Cont'd)

2.1.3 Liability (Cont'd)

(B) Acts or Omissions

The Telephone Company shall not be liable for any act or omission of any other carrier or customer providing a portion of a service, nor shall the Telephone Company for its own act or omission hold liable any other carrier or customer providing a portion of a service.

(C) Damages to Customer Premises

The Telephone Company is not liable for damages to the customer premises resulting from the furnishing of a service, including the installation and removal of equipment and associated wiring, unless the damage is caused by the Telephone Company's negligence.

(D) Indemnification of Telephone Company

(1) By the End User

The Telephone Company shall be indemnified, defended and held harmless by the end user against any claim, loss or damage arising from the end user's use of services offered under this tariff, involving:

(A) Claims for libel, slander, invasion of privacy, or infringement of copyright arising from the end user's own communications;

APPROVED FOR FILING - THE PUBLIC SERVICE COMMISSION OF SOUTH CAROLINA - JULY 15, 2014

General Regulations

2.1 Undertaking of the Telephone Company (Cont'd)

2.1.3 Liability (Cont'd)

(D) Indemnification of Telephone Company (Cont'd)

(1) By the End User (Cont'd)

(B) Claims for patent infringement arising from the end user's acts combining or using the service furnished by the Telephone Company in connection with facilities or equipment furnished by the end users or customer or;

(C) All other claims arising out of any act or omission of the end user in the course of using services provided pursuant to this tariff.

(2) By the Customer

The Telephone Company shall be indemnified, defended and held harmless by the customer against any claim, loss or damage arising from the customer's use of services offered under this tariff, involving:

(A) Claims for libel, slander, invasion of privacy, or infringement of copyright arising from the customer's own communications;

(B) Claims for patent infringement arising from the customer's acts combining or using the service furnished by the Telephone Company in connection with facilities or equipment furnished by the end user or customer or;

(C) All other claims arising out of any act or omission of the customer in the course of using services provided pursuant to this tariff.

APPROVED FOR FILING - THE PUBLIC SERVICE COMMISSION OF SOUTH CAROLINA - JULY 15, 2014

General Regulations

2.1 Undertaking of the Telephone Company (Cont'd)

2.1.3 Liability (Cont'd)

(E) Explosive Atmospheres

The Telephone Company does not guarantee or make any warranty with respect to its services when used in an explosive atmosphere. The Telephone Company shall be indemnified, defended and held harmless by the customer from any and all claims by any person relating to such customer's use of services so provided.

(F) No License Granted

No license under patents (other than the limited license to use) is granted by the Telephone Company or shall be implied or arise by estoppel, with respect to any service offered under this tariff. The Telephone Company will defend the customer against claims of patent infringement arising solely from the use by the customer of services offered under this tariff and will indemnify such customer for any damages awarded based solely on such claims.

(G) Circumstances Beyond the Telephone Company's Control

The Telephone Company's failure to provide or maintain services under this tariff shall be excused by labor difficulties, governmental orders, civil commotions, criminal actions taken against the Telephone Company, acts of God and other circumstances beyond the Telephone Company's reasonable control, subject to the Credit Allowance for a Service Interruption as set forth in 2.4.4 following.

APPROVED FOR FILING - THE PUBLIC SERVICE COMMISSION OF SOUTH CAROLINA - JULY 15, 2014

General Regulations

2.1 Undertaking of the Telephone Company (Cont'd)

2.1.4 Provision of Services

The Telephone Company will provide to the customer, upon reasonable notice, services offered in other applicable sections of this tariff at rates and charges specified therein. Services will be made available to the extent that such services are or can be made available with reasonable effort, and after provision has been made for the Telephone Company's telephone exchange services.

2.1.5 Facility Terminations

The services provided under this tariff will include any entrance cable or drop wiring and wire or intrabuilding cable to that point where provision is made for termination of the Telephone Company's outside distribution network facilities at a suitable location inside a customer-designated premises. Such wiring or cable will be installed by the Telephone Company to the Point of Termination. Moves of the Point of Termination at the customer designated premises will be as set forth in 6.4.4 and 7.2.3 following.

2.1.6 Service Maintenance

The services provided under this tariff shall be maintained by the Telephone Company. The customer or others may not rearrange, move, disconnect, remove or attempt to repair any facilities provided by the Telephone Company, other than by connection or disconnection to any interface means used, except with the written consent of the Telephone Company.

APPROVED FOR FILING - THE PUBLIC SERVICE COMMISSION OF SOUTH CAROLINA - JULY 15, 2014

General Regulations

2.1 Undertaking of the Telephone Company (Cont'd)

2.1.7 Changes and Substitutions

Except as provided for equipment and systems subject to FCC Part 68 Regulations at 47 C.F.R. Section 68.110(b), the Telephone Company may, where such action is reasonably required in the operation of its business, substitute, change or rearrange any facilities used in providing service under this tariff. Such actions may include, without limitation:

- substitution of different metallic facilities,
- substitution of carrier or derived facilities for metallic facilities used to provide other than metallic facilities
- substitution of metallic facilities for carrier or derived facilities used to provide other than metallic facilities,
- substitution of fiber or optical facilities,
- change of minimum protection criteria,
- change of operating or maintenance characteristics of facilities, or
- change of operations or procedures of the Telephone Company.

In case of any such substitution, change or rearrangement, the transmission parameters will be within the range as set forth in Section 15. following. The Telephone Company shall not be responsible if any such substitution, change or rearrangement renders any customer furnished services obsolete or requires modification or alteration thereof or otherwise affects their use or performance. If such substitution, change or rearrangement materially affects the operating characteristics of the facility, the Telephone Company will provide reasonable notification to the customer in writing. Reasonable time will be allowed for any redesign and implementation required by the change in operating characteristics. The Telephone Company will work cooperatively with the customer to determine reasonable notification procedures.

APPROVED FOR FILING - THE PUBLIC SERVICE COMMISSION OF SOUTH CAROLINA - JULY 15, 2014

General Regulations

2.1 Undertaking of the Telephone Company (Cont'd)

2.1.8 Refusal and Discontinuance of Service

(A) If a customer fails to comply with 2.1.6 preceding (Service Maintenance) or 2.3.1, 2.3.4, 2.3.6, 2.3.11(D), 2.4 1 or 2.5 following (respectively, Damages, Availability for Testing, Balance, Jurisdictional Reports and Certification Requirements, Payment Arrangements, Connection) including any customers failure to make payments on the date and times therein specified, the Telephone Company may, on (30) days written notice to the customer by Certified U.S. Mail, take the following actions:

- refuse additional applications for service and/or refuse to complete any pending orders for service, and/or

- discontinue the provision of service to the customer.

In the case of discontinuance all applicable charges, including termination charges, shall become due.

(B) If a customer fails to comply with 2.2.2 following (Unlawful and Abusive Use), the Telephone Company may, upon written request from a customer, or another exchange carrier, terminate service to any subscriber or customer identified as having utilized service provided under this tariff in the completion of abusive or unlawful telephone calls. Service shall be terminated by the Telephone Company as provided for in its general and/or local exchange service tariffs.

In such instances when termination occurs the Telephone Company shall be indemnified, defended and held harmless by any customer or Exchange Carrier requesting termination of service against any claim, loss or damage arising from the Telephone Company's actions in terminating such service, unless caused by the Telephone Company's negligence.

APPROVED FOR FILING - THE PUBLIC SERVICE COMMISSION OF SOUTH CAROLINA - JULY 15, 2014

General Regulations

2.1 Undertaking of the Telephone Company (Cont'd)

2.1.8 Refusal and Discontinuance of Service (Cont'd)

(C) Except as provided for equipment or systems subject to the FCC Part 68 Rules in 47 C.F.R. Section 68.108, if the customer fails to comply with 2.2.1 following (Interference or Impairment), the Telephone Company will, where practicable, notify the customer that temporary discontinuance of the use of a service may be required; however, where prior notice is not practicable, the Telephone Company may temporarily discontinue service forthwith if such action is reasonable in the circumstances. In case of such temporary discontinuance, the customer will be notified promptly and afforded the opportunity to correct the condition which gave rise to the temporary discontinuance. During such period of temporary discontinuance, credit allowance for service interruptions as set forth in 2.4.4 following is not applicable.

(D) When access service is provided by more than one Telephone Company, the companies involved in providing the joint service may individually or collectively deny service to a customer for nonpayment. Where the Telephone Company(s) affected by the nonpayment is incapable of effecting discontinuance of service without cooperation from the other joint providers of Switched Access Service, such other Telephone Company(s) will, if technically feasible, assist in denying the joint service to the customer. Service denial for such joint service will only include calls originating or terminating within, or transiting, the operating territory of the Telephone Companies initiating the service denial for nonpayment. When more than one of the joint providers must deny service to effectuate termination for nonpayment, in cases where a conflict exists in the applicable tariff provisions, the tariff regulations of the end office Telephone Company shall apply for joint service discontinuance.

APPROVED FOR FILING - THE PUBLIC SERVICE COMMISSION OF SOUTH CAROLINA - JULY 15, 2014

General Regulations

2.1 Undertaking of the Telephone Company (Cont'd)

2.1.8 Refusal and Discontinuance of Service (Cont'd)

(E) If the Telephone Company does not refuse additional applications for service and/or does not discontinue the provision of the services as specified for herein, and the customer's noncompliance continues, nothing contained herein shall preclude the Telephone Company's right to refuse additional applications for service and/or to discontinue the provision of the services to the non-complying customer without further notice.

(F) Reserved For Future Use

APPROVED FOR FILING - THE PUBLIC SERVICE COMMISSION OF SOUTH CAROLINA - JULY 15, 2014

General Regulations

2.1 Undertaking of the Telephone Company (Cont'd)

2.1.9 Notification of Service-Affecting Activities

The Telephone Company will provide the customer reasonable notification of service-affecting activities that may occur in normal operation of its business. Such activities may include, but are not limited to the following:

- equipment or facilities additions,
- removals or rearrangements,
- routine preventative maintenance and
- major switching machine change-out.

Generally, such activities are not individual customer service specific, but may affect many customer services. No specific advance notification period is applicable to all service activities. The Telephone Company will work cooperatively with the customer to determine the reasonable notification requirements.

2.1.10 Coordination with Respect to Network Contingencies

The Telephone Company intends to work cooperatively with the customer to develop network contingency plans in order to maintain maximum network capability following natural or man-made disasters which affect telecommunications services.

2.1.11 Provision and Ownership of Telephone Numbers

The Telephone Company reserves the reasonable right to assign, designate or change telephone numbers, any other call number designations associated with Access Services, or the Telephone Company serving central office prefixes associated with such numbers, when necessary in the conduct of its business. Should it become necessary to make a change in such number(s), the Telephone Company will furnish to the customer 6 months notice, by Certified U.S. Mail, of the effective date and an explanation of the reason(s) for such change(s).

APPROVED FOR FILING - THE PUBLIC SERVICE COMMISSION OF SOUTH CAROLINA - JULY 15, 2014

General Regulations

2.2 Use

2.2.1 Interference or Impairment

The characteristics and methods of operation of any circuits, facilities or equipment provided by other than the Telephone Company and associated with the facilities utilized to provide services under this tariff shall not:

- interfere with or impair service over any facilities of the Telephone Company, its affiliated companies, or its connecting and concurring carriers involved in its services,
- cause damage to their plant
- impair the privacy of any communications carried over their facilities, or
- create hazards to the employees of any of them or the public.

2.2.2 Unlawful and Abusive Use

(A) The service provided under this tariff shall not be used for an unlawful purpose or used in an abusive manner.

Abusive use includes:

(1) The use of the service of the Telephone Company for a call or calls, anonymous or otherwise, in a manner reasonably expected to frighten, abuse, torment, or harass another;

(2) The use of the service in such a manner as to interfere unreasonably with the use of the service by one or more other customers.

APPROVED FOR FILING - THE PUBLIC SERVICE COMMISSION OF SOUTH CAROLINA - JULY 15, 2014

General Regulations

2.3 Obligations of the Customer

2.3.1 Damages

The customer shall reimburse the Telephone Company for damages to Telephone Company facilities utilized to provide services under this tariff caused by the negligence or willful act of the customer or resulting from the customer's improper use of the Telephone Company facilities, or due to malfunction of any facilities or equipment provided by other than the Telephone Company. Nothing in the foregoing provision shall be interpreted to hold one customer liable for another customer's actions. The Telephone Company will, upon reimbursement for damages, cooperate with the customer in prosecuting a claim against the person causing such damage and the customer shall be subrogated to the right of recovery by the Telephone Company for the damages to the extent of such payment.

2.3.2 Ownership of Facilities and Theft

Facilities utilized by the Telephone Company to provide service under the provisions of this tariff shall remain the property of the Telephone Company. Such facilities shall be returned to the Telephone Company by the customer, whenever requested, within a reasonable period. The equipment shall be returned in as good condition as reasonable wear will permit.

APPROVED FOR FILING - THE PUBLIC SERVICE COMMISSION OF SOUTH CAROLINA - JULY 15, 2014

General Regulations

2.3 Obligations of the Customer (Cont'd)

2.3.3 Equipment Space and Power

The customer shall furnish or arrange to have furnished to the Telephone Company, at no charge, equipment space and electrical power required by the Telephone Company to provide services under this tariff at the points of termination of such services. The selection of ac or dc power shall be mutually agreed to by the customer and the Telephone Company. The customer shall also make necessary arrangements in order that the Telephone Company will have access to such spaces at reasonable times for installing, testing, repairing or removing Telephone Company facilities used to provide services.

2.3.4 Availability for Testing

Access to facilities used to provide services under this tariff shall be available to the Telephone Company at times mutually agreed upon in order to permit the Telephone Company to make tests and adjustments appropriate for maintaining the services in satisfactory operating condition. Such tests and adjustments shall be completed within a reasonable time. As set forth in 2.4.4(C)4 following no credit will be allowed for any interruptions involved during such tests and adjustments.

2.3.5 Limitation of Use of Metallic Facilities

Signals applied to a metallic facility shall conform to the limitations set forth in Technical Reference Publication AS No. 1. In the case of application of dc telegraph signaling systems, the customer shall be responsible, at its expense, for the provision of current limiting devices to protect the Telephone Company facilities from excessive current due to abnormal conditions and for the provision of noise mitigation networks when required to reduce excessive noise.

APPROVED FOR FILING - THE PUBLIC SERVICE COMMISSION OF SOUTH CAROLINA - JULY 15, 2014

General Regulations

2.3 Obligations of the Customer (Cont'd)

2.3.6 Balance

All signals for transmission over the facilities used to provide services under this tariff shall be delivered by the customer balanced to ground except for ground start, duplex (DX) and McCulloch-Loop (Alarm System) type signaling and dc telegraph transmission at speeds of 75 baud or less.

2.3.7 Design of Customer Services

Subject to the provisions of 2.1.7 preceding (Changes and Substitutions), the customer shall be solely responsible, at its own expense, for the overall design of its services and for any redesigning or rearrangement of its services which may be required because of changes in facilities, operations or procedures of the Telephone Company, minimum protection criteria or operating or maintenance characteristics of the facilities.

2.3.8 References to the Telephone Company

The customer may advise end users that certain services are provided by the Telephone Company in connection with the service the customer furnishes to end users; however, the customer shall not represent that the Telephone Company jointly participates in the customer's services.

APPROVED FOR FILING - THE PUBLIC SERVICE COMMISSION OF SOUTH CAROLINA - JULY 15, 2014

General Regulations

2.3 Obligations of the Customer (Cont'd)

2.3.9 Claims and Demands for Damages

(A) With respect to claims of patent infringement made by third persons, the customer shall defend, indemnify, protect and save harmless the Telephone Company from and against all claims arising out of the combining with, or use in connection with, the services provided under this tariff, any circuit, apparatus, system or method provided by the customer.

(B) The customer shall defend, indemnify and save harmless the Telephone Company from and against any suits, claims, losses or damages, including punitive damages, attorney fees and court costs by third persons arising out of the construction, installation, operation, maintenance, or removal of the customer's circuits, facilities, or equipment connected to the Telephone Company's services provided under this tariff including, without limitation, Workmen's Compensation claims, actions for infringement of copyright and/or unauthorized use of program material, libel and slander actions based on the content of communications transmitted over the customer's circuits, facilities or equipment, and proceedings to recover taxes, fines, or penalties for failure of the customer to obtain or maintain in effect any necessary certificates, permits, licenses, or other authority to acquire or operate the services provided under this tariff; provided, however, the foregoing indemnification shall not apply to suits, claims, and demands to recover damages for damage to property, death, or personal injury unless such suits, claims or demands are based on the tortuous conduct of the customer, its officers, agents or employees.

(C) The customer shall defend, indemnify and save harmless the Telephone Company from and against any suits, claims, losses or damages, including punitive damages, attorney fees and court costs by the customer or third parties arising out of any act or omission of the customer in the course of using services provided under this tariff.

APPROVED FOR FILING - THE PUBLIC SERVICE COMMISSION OF SOUTH CAROLINA - JULY 15, 2014

General Regulations

2.3 Obligations of the Customer (Cont'd)

2.3.10 Coordination with Respect to Network Contingencies

The customer shall, in cooperation with the Telephone Company, coordinate in planning the actions to be taken to maintain maximum network capability following natural or man-made disasters which affect telecommunications services.

2.3.11 Jurisdictional Report and Certification Requirements

(A) Certification Requirements - Special Access

When the customer orders Special Access Service, and the customer certifies to the Telephone Company in writing that ten percent or less of the traffic is intrastate, the service is considered to be intrastate and is provided under this Tariff.

Following initial certification, should the jurisdictional nature of the customer's Special Access Service change, the customer should inform the Telephone Company in writing of the change. The effective date of the change will be the date the Telephone Company receives the customer's notice of change. No charge applies for the jurisdictional change.

APPROVED FOR FILING - THE PUBLIC SERVICE COMMISSION OF SOUTH CAROLINA - JULY 15, 2014

General Regulations

2.3 Obligations of the Customer (Cont'd)

2.3.11 Jurisdictional Report and Certification Requirements (Cont'd)

(B) Disputes Involving Jurisdictional Certification - Special Access

If a dispute arises concerning the certification of projected interstate traffic as described above, the Telephone Company will ask the customer to provide the data the customer used to determine that more than 10% of the traffic is interstate. The customer shall supply the data within thirty (30) days of the Telephone Company request. If the reply results in a jurisdictional change of a Special Access Service, the effective date of the change will be the date the Telephone Company receives the customer's reply. There is no charge when the customer's reply results in a jurisdictional change in the Special Access Service. No changes will be made to existing intrastate percentages until the requested detail has been provided to warrant such change.

(C) Jurisdictional Reports - Switched Access

For Switched Access Service, the Telephone Company cannot in all cases determine the jurisdictional nature of customer traffic and its related access minutes. In such cases the customer may be called upon to provide a projected estimate of its traffic, split between the interstate and intrastate jurisdictions. The following regulations govern such estimates, their reporting by the customer and cases where the Telephone Company will develop jurisdictional percentages.

(1) General

When a customer initially orders Switched Access Service, the customer shall state in its order the Percent Interstate Usage (PIU) an Percent Intralata Usage (PLU) on a state wide, LATA or billing account number level (at the option of the customer) on a local exchange company specific basis, separately for each of the following:

- Feature Group A (FGA)
- Feature Group B (FGB)
- Feature Group D (FGD)
- 500 Service Access
- 700 Service Access
- 800/888/877 Service Access
- 900 Service Access
- Switched Entrance Facilities
- Direct Trunk Transport
- Carrier Identification Parameter (CIP)
- Switched Transport Multiplexing Equipment

The PIU factor provided for each of the foregoing facilities categories (Switched Entrance Facilities, Switched Direct Trunk Transport, CIP and Switched Transport Multiplexing Equipment) shall reflect the combination of all traffic types which traverse such facility category.

APPROVED FOR FILING - THE PUBLIC SERVICE COMMISSION OF SOUTH CAROLINA - JULY 15, 2014

General Regulations

2.3 Obligations of the Customer (Cont'd)

2.3.11 Jurisdictional Report Requirements (Cont'd)

(C) Jurisdictional Reports - Switched Access (Cont'd)

(1) General (Cont'd)

Additionally, upon employing the 700 Service Access Code over Feature Group D Switched Access Services, the customer must provide the Company the PIU for the 700 calls. A PIU of less than one-hundred percent is not allowed in those LATAs where the service is not available as an intrastate access service. The customer shall report the PIU on a statewide, LATA or billing account number level (at the option of the customer) on a local exchange company specific basis.

The customer shall furnish to the Company annually a report of the actual PIU on a statewide, LATA or billing account number level (at the option of the customer) on a local exchange company specific basis, separately for each of the services listed previously in 2.3.11.(C)(1). The customer, at its own option, may report revised PIU's more frequently if a change warrants an update before the annual period. These updates should be made to the Telephone Company on the first day of the next available quarter (January, July or October). The annual report of revised PIU's should be received by the first of March of each year. The report should show revised interstate percentages of use representing interstate usage for the past calendar year period, for each interstate service. The revised percentage will be implemented July 1, and will serve as the interstate percentage for the next twelve months billing. If the customer does not supply the report, the Telephone Company will assume the percentages to be the same as those provided in the last report. For those cases in which a report has never been received from the customer, the Telephone Company will assume the percentages to be the same as those provided in the order for service as set forth in (2) following.

The customer shall compute the PIU using the following formula (rounded to a whole percentage).

$$\frac{\text{Interstate Minutes}}{\text{Total Minutes}} = \text{Percent Intrastate Usage Factor}$$

1.0 minus Interstate factor equals Intrastate factor.

APPROVED FOR FILING - THE PUBLIC SERVICE COMMISSION OF SOUTH CAROLINA - JULY 15, 2014

General Regulations

2.3 Obligations of the Customer (Cont'd)

2.3.11 Jurisdictional Report Requirements (Cont'd)

(C) Jurisdictional Reports - Switched Access (Cont'd)

(1) General (Cont'd)

When Special Access service is provided on a Switched Access facility, e.g., Special access DS1 on a Switched Access DS3, the facility will be apportioned between Switched Access and Special Access. The jurisdiction of the Special access service shall reflect the composite of the jurisdiction of the lower capacity services, if any, of which it is comprised.

The PIUs described in (2) through (3) following are applied to associated usage rated elements and services, e.g., Information Surcharge, Local Switching, Tandem Switched Transport, Tandem Switching and Transport Interconnection charges. The PIUs are also used to develop the carrier charges. Separate PIUs are required for flat rated Entrance Facilities, Direct Trunked Transport and Mulitplexers. (N)

(a) There may be some portion of terminating minutes where it is not possible to know and therefore to send, the needed originating number information. A "floor" of 7.00 percent (%) will be set for terminating minutes lacking originating numbers for all switched access customers.

(1) When the percentage of terminating traffic without sufficient call detail to determine jurisdiction does not exceed the sum of the floor plus a 2.00 percent (%) grace threshold or 9.00 percent (%), the Telephone Company will apply the PIU factor, either provided by the customer or as set forth in section (C)(1).

(2) When the percentage is greater than 9.00 percent (%), the Telephone Company will assess rates from this tariff on all minutes exceeding the floor. For example, if 30 percent (%) of a customer's terminating minutes sent to the Telephone Company do not contain sufficient originating information to allow the Telephone Company to determine the originating location, then the Telephone Company would apply the provisions of this tariff to those minutes exceeding the floor, or 23 percent (%) in this example.

In the event that the Telephone Company applies rates to terminating calls without originating number information as provided in this tariff, customers will have the opportunity to request backup documentation of the Telephone Company's basis for such application, and further request that the Telephone Company change the application of the intrastate access rate upon a showing by the customer of why the intrastate rate should not be applied. (N)

APPROVED FOR FILING - THE PUBLIC SERVICE COMMISSION OF SOUTH CAROLINA - JULY 15, 2014

General Regulations

2.3 Obligations of the Customer (Cont'd)

2.3.11 Jurisdictional Report Requirements (Cont'd)

(C) Jurisdictional Reports - Switched Access (Cont'd)

(2) Feature Groups A and B

(a) When a customer orders Feature Group A and/or Feature Group B Switched Access Service the customer shall, in its order, state the projected intrastate percentage for intrastate usage for each Feature Group A and/or Feature Group B Switched Access Service group ordered. The term group shall be construed to mean single lines or trunks as well. If the customer adds or discontinues some but not all of the Feature Group A and/or Feature Group B Switched Access Services in a group, it shall provide a revised projected intrastate and intrastate intraLATA percentage for the overall services provided. The revised reports will serve as the basis for future billing and will be effective on the next bill date.

APPROVED FOR FILING - THE PUBLIC SERVICE COMMISSION OF SOUTH CAROLINA - JULY 15, 2014

General Regulations

2.3 Obligations of the Customer (Cont'd)

2.3.11 Jurisdictional Report Requirements (Cont'd)

(C) Jurisdictional Reports - Switched Access (Cont'd)

(2) Feature Groups A and B (Cont'd)

(b) For multiline hunt group or trunk group arrangements where either the interstate or the intrastate charges are based on measured usage, the intrastate and intrastate intraLATA Feature Group A and/or Feature Group B Switched Access Service(s) information reported as set forth in (a) and (b) preceding will be used to determine the charges.

For all groups the number of access minutes (either measured or assumed) for a group will be multiplied by the projected intrastate percentage to develop the intrastate access minutes. The number of access minutes for the group minus the developed intrastate access minutes for the group will be the developed interstate access minutes.

APPROVED FOR FILING - THE PUBLIC SERVICE COMMISSION OF SOUTH CAROLINA - JULY 15, 2014

General Regulations

2.3 Obligations of the Customer (Cont'd)

2.3.11 Jurisdictional Report Requirements (Cont'd)

(C) Jurisdictional Reports - Switched Access (Cont'd)

(3) Feature Groups C and D

When a customer orders Feature Group C or Feature Group D Switched Access Service(s) the customer may provide the projected intrastate usage for each end office in its order. The Telephone Company, where the jurisdiction can be determined from the call detail, will determine the projected intrastate percentage as follows:

APPROVED FOR FILING - THE PUBLIC SERVICE COMMISSION OF SOUTH CAROLINA - JULY 15, 2014

General Regulations

2.3 Obligations of the Customer (Cont'd)

2.3.11 Jurisdictional Report Requirements (Cont'd)

(C) Jurisdictional Reports - Switched Access (Cont'd)

(3) Feature Group C and D (Cont'd)

- For originating access minutes, the projected intrastate percentage will be developed on a monthly basis by end office for Feature Group C or Feature Group D Switched Access Service by dividing the measured intrastate originating access minutes by the total originating access minutes, when the call detail is adequate to determine the appropriate jurisdiction.

The Telephone Company, where the jurisdiction can not be determined from the call detail, will determine the projected interstate percentage as follows:

- When originating call details are insufficient to determine the jurisdiction for the call (e.g. 800/888/877 Access Service), the customer must supply the projected intrastate percentage. (C)

- For terminating access minutes, the customer may supply the interstate percentage or the customer may allow the originating access minute percentage as listed above to be used to develop the projected interstate percentage for such terminating access minutes. Customers choosing not to supply a PIU for terminating Feature Group C or D switched access service may continue to allow the Company to develop this PIU based upon the percentage for originating access minutes. This percentage shall be used by the Company as the interstate percentage for such call detail.

- For Switched Entrance Facilities, Switched Direct Trunk Transport, CIP and Switched Transport Multiplexing, the customer may allow the originating access minute percentage as listed above to be used to develop the projected interstate percentage for such dedicated switched transport service.

- When a customer employs the use of 700 or 900 Service Access Codes over Feature Group D switched access, the customer must provide the Company with the projected percentage of interstate use for the 700 or 900 calls made. The remaining percentage will be assumed intrastate percentage.

APPROVED FOR FILING - THE PUBLIC SERVICE COMMISSION OF SOUTH CAROLINA - JULY 15, 2014

General Regulations

2.3 Obligations of the Customer (Cont'd)

2.3.11 Jurisdictional Report Requirements (Cont'd)

(D) Billing Disputes Involving Jurisdictional Reports - Switched Access

For Switched Access, if a billing dispute arises or the South Carolina Public Service Commission questions the projected intrastate and/or intraLATA percentages, the Telephone Company will ask the customer to provide the data the customer used to determine the projected intrastate and intraLATA percentages. The customer shall supply the data within 30 days of the Telephone Company request. The customer shall keep, for a minimum of 12 months, records of call detail from which the percentages of intrastate and intraLATA use can be ascertained and upon request of the Telephone Company make the records available for inspection as reasonably necessary for purposes of verification of the percentage. At a minimum for annual PIU revisions, the information used by the Customer to support the revised PIU must reflect usage (either actual or a representative sample) for each quarter of the prior calendar year. No change will be made to existing intrastate percentages until the detail has been provided to warrant such change.

APPROVED FOR FILING - THE PUBLIC SERVICE COMMISSION OF SOUTH CAROLINA - JULY 15, 2014

General Regulations

2.3 Obligations of the Customer (Cont'd)

2.3.12 Determination of Intrastate Charges for Mixed Interstate and Intrastate Switched Access Service

When mixed interstate and intrastate Switched Access Service is provided, all charges (i.e., nonrecurring, monthly and/or usage) including optional features charges, will be prorated between interstate and intrastate. The percentage determined as set forth in 2.3.11 (C) preceding will serve as the basis for prorating the charges unless the Telephone Company is billing according to actuals by jurisdiction. The percentage of an Access Service to be charged as intrastate is applied in the following manner:

(A) Monthly and Nonrecurring Charges

For monthly and nonrecurring chargeable rate elements, multiply the percent intrastate use times the quantity of chargeable elements times the stated tariff rate per element.

(B) Usage Sensitive Charges

For usage sensitive (i.e., access minutes and calls) chargeable rate elements, multiply the percent intrastate use times actual use (i.e., measured or Telephone Company assumed average use) times the stated tariff rate.

The intrastate percentage may change as revised usage reports are submitted as set forth in 2.3.11 preceding.

APPROVED FOR FILING - THE PUBLIC SERVICE COMMISSION OF SOUTH CAROLINA - JULY 15, 2014

General Regulations

2.3 Obligations of the Customer (Cont'd)

2.3.13 Proof of Certification

A. When a customer places an order with the Company for switched access services provided in this tariff, the customer shall be responsible for furnishing to the Company at the time the service is requested, proof that the customer has obtained a certificate of public convenience and necessity from the South Carolina Public Service Commission. Unless this proof is presented to the Company, the customers request for service will not be processed.

APPROVED FOR FILING - THE PUBLIC SERVICE COMMISSION OF SOUTH CAROLINA - JULY 15, 2014

General Regulations

2.4 Payment Arrangements and Credit Allowances

2.4.1 Payment of Rates, Charges and Deposits

(A) Deposits

The Telephone Company will only require a customer which has a proven history of late payments to the Telephone Company or does not have established credit, to make a deposit prior to or at any time after the provision of a service to the customer. No such deposit will be required of a customer which is a successor of a company which has established credit and has no history of late payments to the Telephone Company. Such deposit will not exceed the actual or estimated rates and charges for the service for a two month period. The fact that a deposit has been made in no way relieves the customer from complying with the Telephone Company's regulations as to the prompt payment of bills. At such time as the provision of the service to the customer is terminated, the amount of the deposit will be credited to the customer's account and any credit balance which may remain will be refunded.

Such a deposit will be refunded or credited to the account when the customer has established credit or, in any event, after the customer has established a one-year prompt payment record at any time prior to the termination of the provision of the service to the customer. In case of a cash deposit, for the period the deposit is held by the Telephone Company, the customer will receive interest at the same percentage rate as that set forth in (C)(2)(a) or in (C)(2)(b) following, whichever is lower.

The rate will be compounded daily for the number of days from the date the customer deposit is received by the Telephone Company to and including the date such deposit is credited to the customer's account or the date the deposit is refunded by the Telephone Company. Should a deposit be credited to the customer's account, as indicated above, no interest will accrue on the deposit from the date such deposit is credited to the customer's account.

APPROVED FOR FILING - THE PUBLIC SERVICE COMMISSION OF SOUTH CAROLINA - JULY 15, 2014

General Regulations

2.4 Payment Arrangements and Credit Allowances (Cont'd)

2.4.1 Payment of Rates, Charges and Deposits (Cont'd)

(B) Bill Dates

The Telephone Company shall bill on a current basis all charges incurred by and credits due to the customer under this tariff attributable to services established or discontinued during the preceding billing period. In addition, the Telephone Company shall bill in advance charges for all services to be provided during the ensuing billing period except for charges associated with service usage and for the Federal Government which will be billed in arrears. The bill day (i.e., the billing date of a bill for a customer for Access Service under this tariff), the period of service each bill covers and the payment date will be as follows:

(1) End User Access Service and Presubscription

For End User Access Service and Presubscription Service, the Telephone Company will establish a bill day each month for each end user account or advise the customer in writing of an alternate billing schedule. Alternate billing schedules shall not be established on less than 60 days notice or initiated by the Telephone Company more than twice in any consecutive 12 month period. The bill will cover End User Access Service charges for the ensuing billing period except for End User Access Service for the Federal Government which will be billed in arrears. Any applicable Presubscription Charges, any known unbilled charges for prior periods and any known unbilled adjustments for prior periods for End User Access Service and Presubscription Service will be applied to this bill. Such bills are due when rendered.

APPROVED FOR FILING - THE PUBLIC SERVICE COMMISSION OF SOUTH CAROLINA - JULY 15, 2014

General Regulations

2.4 Payment Arrangements and Credit Allowances (Cont'd)

2.4.1 Payment of Rates, Charges and Deposits (Cont'd)

(B) Bill Dates (Cont'd)

(2) Access Services Other than End User and Presubscription

For Service other than End User Access Service and Presubscription Service, the Telephone Company will establish a bill day each month for each customer account or advise the customer in writing of an alternate billing schedule. Alternate billing schedules shall not be established on less than 60 days notice or initiated by the Telephone Company more than twice in any consecutive 12 month period.

The bill will cover nonusage sensitive service charges for the ensuing billing period for which the bill is rendered, any known unbilled nonusage sensitive charges for prior periods and unbilled usage charges for the period after the last bill day through the current bill day. Any known unbilled usage charges for prior periods and any known unbilled adjustments will be applied to this bill. Payment for such bills is due in immediately available funds by the payment date, as set forth in (C) following. If payment is not received by the payment date, a late payment penalty will apply as set forth in (C) following.

APPROVED FOR FILING - THE PUBLIC SERVICE COMMISSION OF SOUTH CAROLINA - JULY 15, 2014

General Regulations

2.4 Payment Arrangements and Credit Allowances (Cont'd)

2.4.1 Payment of Rates, Charges and Deposits (Cont'd)

(C) Payment Dates and Late Payment Penalties

(1) All bills dated as set forth in (B)(2) preceding for service, other than End User Service and Presubscription Service, provided to the customer by the Telephone Company are due 31 days (payment date) after the bill day or by the next bill date (i.e., same date in the following month as the bill date), whichever is the shortest interval, except as provided herein, and are payable in immediately available funds. If the customer does not receive a bill at least 20 days prior to the 31 day payment due date, then the bill shall be considered delayed. When the bill has been delayed, upon request of the customer the due date will be extended by the number of days the bill was delayed. Such request of the customer must be accompanied with proof of late bill receipt.

APPROVED FOR FILING - THE PUBLIC SERVICE COMMISSION OF SOUTH CAROLINA - JULY 15, 2014

General Regulations

2.4 Payment Arrangements and Credit Allowances (Cont'd)

2.4.1 Payment of Rates, Charges and Deposits (Cont'd)

(C) Payment Dates and Late Payment Penalties

(1) (Cont'd)

If such payment date would cause payment to be due on a Saturday, Sunday or Legal Holiday, payment for such bills will be due from the customer as follows:

If the payment date falls on a Sunday or on a Legal Holiday which is observed on a Monday, the payment date shall be the first non-Holiday day following such Sunday or Legal Holiday.

If the payment date falls on a Saturday or on a Legal Holiday which is observed on Tuesday, Wednesday, Thursday or Friday, the payment date shall be the last non-Holiday day preceding such Saturday or Legal Holiday.

APPROVED FOR FILING - THE PUBLIC SERVICE COMMISSION OF SOUTH CAROLINA - JULY 15, 2014

General Regulations

2.4 Payment Arrangements and Credit Allowances (Cont'd)

2.4.1 Payment of Rates, Charges and Deposits (Cont'd)

(C) Payment Dates and Late Payment Penalties (Cont'd)

(2) Further, if no payment is received by the payment date or if a payment or any portion of a payment is received by the Telephone Company after the payment date as set forth in (1) preceding, or if a payment or any portion of a payment is received by the Telephone Company in funds which are not immediately available to the Telephone Company, then a late payment penalty shall be due to the Telephone Company. The late payment penalty shall be the payment or the portion of the payment not received by the payment date times a late factor. The late factor shall be the lesser of:

(a) the highest interest rate (in decimal value) which may be levied by law for commercial transactions, compounded daily for the number of days from the payment date to and including the date that the customer actually makes the payment to the Telephone Company, or

(b) 0.000292 per day, compounded daily for the number of days from the payment date to and including the date that the customer actually makes the payment to the Telephone Company.

(D) Valid Billing Dispute

A valid billing dispute consists of written documentation specifically listing the total dollar amount of the dispute, specific rate elements being disputed and their dollar amounts. The dispute must be received in writing within 30 days after the due date of the bill. At least one of the seven following reasons must be given for the dispute to be considered valid.

1. Incorrect rate
2. Error in quantity (i.e., minutes or quantity of circuits incorrect.)
3. Service no longer exists.
4. Invalid factors
5. Incorrect customer being billed.
6. Invalid Purchase Order Number (PON)
7. Backbilling

Refusal to pay an entire bill or any portion thereof without written supporting documentation, will not be considered a valid dispute and will be handled as a non payment in accordance with Section 2.4.1(C) above.

APPROVED FOR FILING - THE PUBLIC SERVICE COMMISSION OF SOUTH CAROLINA - JULY 15, 2014

General Regulations

2.4 Payment Arrangements and Credit Allowances (Cont'd)

2.4.1 Payment of Rates, Charges and Deposits (Cont'd)

(E) Billing Disputes Resolved in Favor of the Telephone Company

Late payment charges will apply to amounts withheld pending settlement of the dispute. Late payment charges are calculated as set forth in (C)(2) preceding except that when the customer disputes the bill on or before the payment date and pays the undisputed amount on or before the payment date, the penalty interest period shall not begin until 10 days following the payment date.

(F) Billing Disputes Resolved in Favor of the Customer

If the customer pays the total billed amount and disputes all or part of the amount, the Telephone Company will refund the overpayment. In addition, the Telephone Company will pay to the customer penalty interest on the overpayment. When a claim is filed within 90 days of the due date, the penalty interest period shall begin on the payment date. When a claim is filed more than 90 days after the due date, the penalty interest period shall begin from the date of the claim or the date of overpayment, whichever is later.

The penalty interest period shall end on the date that the Telephone Company actually refunds the overpayment to the customer. The penalty interest rate shall be the lesser of:

(1) the highest interest rate (in decimal value) which may be levied by law for commercial transactions, compounded daily for the number of days from the first date to and including the last date of the period involved, or

(2) 0.000292 per day, compounded daily for the number of days from the first date to and including the last date of the period involved.

(D)

(D)

APPROVED FOR FILING - THE PUBLIC SERVICE COMMISSION OF SOUTH CAROLINA - JULY 15, 2014

General Regulations

2.4 Payment Arrangements and Credit Allowances (Cont'd)

2.4.1 Payment of Rates, Charges and Deposits (Cont'd)

(G) Rounding of Charges (T)

When a rate as set forth in this tariff is shown to more than two decimal places, the charges will be determined using the rate shown. The resulting amount will then be rounded to the nearest penny (i.e., rounded to two decimal places).

2.4.2 Minimum Periods

The minimum period for which services are provided and for which rates and charges are applicable is one month except for those usage rated services set forth in Section 6. (Switched Access Service) and 9. (Directory Assistance Service) and those services set forth in 6.1.3 (Switched Access High Capacity DS3 Entrance Facility and High Capacity DS3 Direct Trunked Transport), 7.2.4, (Part-time Video and Program Audio), and 7.2.8 (High Capacity DS1 and DS3 Service), or as otherwise specified.

The minimum period for which service is provided and for which rates and charges are applicable for a Specialized Service or Arrangement provided on an individual case basis as set forth in Section 12. following, is one month unless a different minimum period is established with the individual case filing.

When a service is discontinued prior to the expiration of the minimum period, charges are applicable, whether the service is used or not, as follows:

(A) When a service with a one month minimum period is discontinued prior to the expiration of the minimum period, a one month charge will apply at the rate level in effect at the time service is discontinued.

(B) When a service with a minimum period greater than one month is discontinued prior to the expiration of the minimum period, except for DS3 monthly service and DS1 and DS3 Optional Payment Plans as provided for in Sec. 5.5.1 and 7.2.8 following, the applicable charge will be the lesser of (1) the Telephone Company's total nonrecoverable costs less the net salvage value for the discontinued service or (2) the total monthly charges, at the rate level in effect at the time service is discontinued, for the remainder of the minimum period.

APPROVED FOR FILING - THE PUBLIC SERVICE COMMISSION OF SOUTH CAROLINA - JULY 15, 2014

General Regulations

2.4 Payment Arrangements and Credit Allowances (Cont'd)

2.4.3 Cancellation of an Order for Service

Provisions for the cancellation of an order for service are set forth in other applicable sections of this tariff.

2.4.4 Credit Allowance for Service Interruptions

(A) General

A service is interrupted when it becomes unusable to the customer because of a failure of a facility component used to furnish service under this tariff or in the event that the protective controls applied by the Telephone Company result in the complete loss of service by the customer as set forth in 6.2.1 following. An interruption period starts when an inoperative service is reported to the Telephone Company, and ends when the service is operative.

(B) When a Credit Allowance Applies

In case of an interruption to any service, allowance for the period of interruption, if not due to the negligence of the customer, shall be provided.

For Digital Data Access, SD Codes D1 through D4 and High Capacity, HC1, Special Access Services, any period during which the error performance is below that specified for the service will be considered as an interruption.

Service interruptions for Specialized Service or Arrangements provided under Section 12. following shall be administered in the same manner as those set forth in this section (2.4.4) unless other regulations are specified with the individual case filing.

APPROVED FOR FILING - THE PUBLIC SERVICE COMMISSION OF SOUTH CAROLINA - JULY 15, 2014

General Regulations

2.4 Payment Arrangements and Credit Allowances (Cont'd)

2.4.4 Credit Allowance for Service Interruptions (Cont'd)

(B) When a Credit Allowance Applies (Cont'd)

Credit allowances are computed as follows:

(1) Special Access Service other than Program Audio and Video and flat rated Switched Access Service rate elements

For Special Access Services other than Program Audio and Video Services and for flat rated Switched Access Service rate elements (i.e., Entrance Facility, Direct Trunked Transport and Multiplexing), no credit shall be allowed for an interruption of less than 30 minutes. The customer shall be credited for an interruption of 30 minutes or more at the rate of 1/1440 of the monthly charges for the facility or service for each period of 30 minutes or major fraction thereof that the interruption continues.

The monthly charges used to determine the credit shall be as follows:

(a) Two-point Services

For two-point services, the monthly charge shall be the total of all the monthly rate element charges associated with the service (i.e., two channel terminations, channel mileage and optional features and functions).

(b) Multipoint Services

For multipoint services, the monthly charge shall be only the total of all the monthly rate element charges associated with that portion of the service that is inoperative (i.e., a channel termination per customer premises, channel mileage and optional features and functions).

APPROVED FOR FILING - THE PUBLIC SERVICE COMMISSION OF SOUTH CAROLINA - JULY 15, 2014

General Regulations

2.4 Payment Arrangements and Credit Allowances (Cont'd)

2.4.4 Credit Allowance for Service Interruptions (Cont'd)

(B) When a Credit Allowance Applies (Cont'd)

(1) Special Access Service other than Program Audio and Video and flat rated Switched Access Service rate elements, (Cont'd)

(c) Multiplexed Services

For multiplexed services, the monthly charge shall be the total of all the monthly rate element charges associated with that portion of the service that is inoperative. When the facility which is multiplexed or the multiplexer itself is inoperative, the monthly charge shall be the total of all the monthly rate element charges associated with the service (i.e., the channel termination, channel mileage, Entrance Facility, Direct Trunked Transport, and optional features and functions, including the multiplexer on the facility to the hub, and the channel terminations, channel mileages and optional features and functions on the individual services from the hub). When the service which rides a channel of the multiplexed facility is inoperative, the monthly charge shall be the total of all the monthly rate element charges associated with that portion of the service from the hub to a customer premises (i.e., channel termination, channel mileage, Direct Trunked Transport, and optional features and functions).

(d) Flat rated Switched Access rate elements

For flat rated Switched Access Service rate elements, the monthly charge shall be the total of all the monthly rate element charges associated with the service (i.e., Entrance Facility, Direct Trunked Transport and Multiplexing).

APPROVED FOR FILING - THE PUBLIC SERVICE COMMISSION OF SOUTH CAROLINA - JULY 15, 2014

General Regulations

2.4 Payment Arrangements and Credit Allowances (Cont'd)

2.4.4 Credit Allowance for Service Interruptions (Cont'd)

(B) When a Credit Allowance Applies (Cont'd)

(2) Program Audio and Video Special Access Services

For Program Audio and Video Special Access Services, no credit shall be allowed for an interruption of less than 30 seconds. The customer shall be credited for an interruption of 30 seconds or more as follows:

(a) For two-point services, when monthly rates are applicable, the credit shall be at the rate of 1/8640 of the monthly charges for the service for each period of 5 minutes or major fraction thereof that the interruption continues.

(b) For two-point services, when daily rates are applicable, the credit shall be at the rate of 1/288 of the daily charges for the service for each period of 5 minutes or major fraction thereof that the interruption continues.

(c) For multipoint services, when monthly rates are applicable, the credit shall be at the rate of 1/8640 of the monthly charges for each channel termination, channel mileage and optional features and functions that are inoperative for each period of 5 minutes or major fraction thereof that the interruption continues.

APPROVED FOR FILING - THE PUBLIC SERVICE COMMISSION OF SOUTH CAROLINA - JULY 15, 2014

General Regulations

2.4 Payment Arrangements and Credit Allowances (Cont'd)

2.4.4 Credit Allowance for Service Interruptions (Cont'd)

(B) When a Credit Allowance Applies (Cont'd)

(2) Program Audio and Video Special Access Services (Cont'd)

(d) For multipoint services, when daily rates are applicable, the credit shall be at the daily rate of 1/288 of the daily charges for channel termination, channel mileage and optional features and functions that are inoperative for each period of 5 minutes or major fraction thereof that the interruption continues.

(e) For multipoint services, the credit for the monthly or daily charges includes the charges for the distribution amplifier only when the distribution amplifier is inoperative.

(f) When two or more interruptions occur during a period of 5 consecutive minutes, such multiple interruptions shall be considered as one interruption.

(3) Switched Access and Directory Assistance Service Usage Rated Elements

For Switched Access Service and Directory Assistance Service usage rated elements, no credit shall be allowed for an interruption of less than 24 hours. The customer shall be credited for an interruption of 24 hours or more at the rate of 1/30 of any applicable monthly rate or assumed minutes of use charge for each period of 24 hours or major fraction thereof that the interruption continues.

APPROVED FOR FILING - THE PUBLIC SERVICE COMMISSION OF SOUTH CAROLINA - JULY 15, 2014

General Regulations

2.4 Payment Arrangements and Credit Allowances (Cont'd)

2.4.4 Credit Allowance for Service Interruptions (Cont'd)

(B) When a Credit Allowance Applies (Cont'd)

(4) Credit Allowances Cannot Exceed Monthly Rate

The credit allowance(s) for an interruption or for a series of interruptions shall not exceed any monthly rate for the service interrupted in any one monthly billing period.

(C) When a Credit Allowance Does Not Apply

No credit allowance will be made for:

(1) Interruptions caused by the negligence of the customer.

(2) Interruptions of a service due to the failure of equipment or systems provided by the customer or others.

(3) Interruptions of a service during any period in which the Telephone Company is not afforded access to the premises where the service is terminated.

(4) Interruptions of a service when the customer has released that service to the Telephone Company for maintenance purposes, to make rearrangements, or for the implementation of an order for a change in the service during the time that was negotiated with the customer prior to the release of that service. Thereafter, a credit allowance as set forth in (B) preceding applies.

APPROVED FOR FILING - THE PUBLIC SERVICE COMMISSION OF SOUTH CAROLINA - JULY 15, 2014

General Regulations

2.4 Payment Arrangements and Credit Allowances (Cont'd)

2.4.4 Credit Allowance for Service Interruptions (Cont'd)

(C) When a Credit Allowance Does Not Apply (Cont'd)

(5) Interruptions of a service which continue because of the failure of the customer to authorize replacement of any element of special construction, as set forth in NATIONAL EXCHANGE CARRIER ASSOCIATION TARIFF F.C.C. NO. 3 for SPECIAL CONSTRUCTION. The period for which no credit allowance is made begins on the seventh day after the customer receives the Telephone Company's written notification of the need for such replacement and ends on the day after receipt by the Telephone Company of the customer's written authorization for such replacement.

(6) Periods when the customer elects not to release the service for testing and/or repair and continues to use it on an impaired basis.

(7) An interruption or a group of interruptions, resulting from a common cause, that would result in credit in an amount less than one dollar.

(D) Use of an Alternative Service Provided by the Telephone Company

Should the customer elect to use an alternative service provided by the Telephone Company during the period that a service is interrupted, the customer must pay the tariffed rates and charges for the alternative service used.

APPROVED FOR FILING - THE PUBLIC SERVICE COMMISSION OF SOUTH CAROLINA - JULY 15, 2014

General Regulations

2.4 Payment Arrangements and Credit Allowances (Cont'd)

2.4.4 Credit Allowance for Service Interruptions (Cont'd)

(E) Temporary Surrender of a Service (Cont'd)

In certain instances, the customer may be requested by the Telephone Company to surrender a service for purposes other than maintenance, testing or activity relating to a service order. If the customer consents, a credit allowance will be granted. The credit allowance will be 1/1440 of the monthly rate for each period of 30 minutes or fraction thereof that the service is surrendered. In no case will the credit allowance exceed the monthly rate for the service surrendered in any one monthly billing period.

2.4.5 Re-establishment of Service Following Fire, Flood or Other Occurrence

(A) Nonrecurring Charges Do Not Apply

Charges do not apply for the re-establishment of service following a fire, flood or other occurrence attributed to an Act of God provided that:

(1) The service is of the same type as was provided prior to the fire, flood or other occurrence.

(2) The service is for the same customer.

(3) The service is at the same location on the same premises.

(4) The re-establishment of service begins within 60 days after Telephone Company service is available. (The 60 day period may be extended a reasonable period if the renovation of the original location on the premises affected is not practical within the allotted time period).

APPROVED FOR FILING - THE PUBLIC SERVICE COMMISSION OF SOUTH CAROLINA - JULY 15, 2014

General Regulations

2.4 Payment Arrangements and Credit Allowances (Cont'd)

2.4.5 Re-establishment of Service Following Fire, Flood or Other Occurrence (Cont'd)

(B) Nonrecurring Charges Apply

Nonrecurring Charges apply for establishing service at a different location on the same premises or at a different premises pending re-establishment of service at the original location.

2.4.6 Title or Ownership Rights

The payment of rates and charges by customers for the services offered under the provisions of this tariff does not assign, confer or transfer title or ownership rights to proposals or facilities developed or utilized, respectively, by the Telephone Company in the provision of such services.

2.4.7 Access Services Provided By More Than One Telephone Company

When an Access Service is provided by more than one Telephone Company, the Telephone Companies involved will mutually agree upon one of the billing methods as set forth in (B)(1) and (2) following based on the service being provided. The Telephone Company will notify the customer in writing of the billing method being used. The customer will place the order for the service as set forth in 5.3 following dependent upon the billing method.

(A) Non Meet Point Billing/Feature Group A

Non Meet Point Billing under a Revenue Sharing Agreement is the generally accepted billing method for Feature Group A Switched Access Service. At the agreement of the participating Telephone Companies, Meet Point Billing may apply to jointly provided Feature Group A services as set forth in (B) following.

APPROVED FOR FILING - THE PUBLIC SERVICE COMMISSION OF SOUTH CAROLINA - JULY 15, 2014

General Regulations

2.4 Payment Arrangements and Credit Allowances (Cont'd)

2.4.7 Access Services Provided By More Than One Telephone Company (Cont'd)

(A) Non Meet Point Billing/Feature Group A (Cont'd)

(1) Single Company Billing/Revenue Sharing

All Telephone Companies jointly providing Feature Group A service will receive an order or a copy of the order, from the customer, as specified in 5.3.1(A) following. The telephone company that provides the dial tone will arrange to provide the service, determine the applicable charges and bill the customer for the entire service in accordance with its ACCESS SERVICES TARIFF as provided for under a Feature Group A Revenue Sharing Agreement.

(B) Meet Point Billing

Meet Point Billing is required when an access service is provided by multiple Telephone Companies for Feature Group B, C, and D Switched Access Services, Directory Assistance and Special Access. It is optional for Feature Group A Switched Access Service.

Each Telephone Company jointly providing the access service will receive an order or copy of the order from the customer as specified in 5.3.2 following and arrange to provide the service.

For usage rated access services the access minutes of use will generally be determined by the recording company. Where the recording company is not the Bill Rendering Company, the recording company will provide detailed usage records to the Bill Rendering Company to develop the access minutes.

APPROVED FOR FILING - THE PUBLIC SERVICE COMMISSION OF SOUTH CAROLINA - JULY 15, 2014

General Regulations

2.4 Payment Arrangements and Credit Allowances (Cont'd)

2.4.7 Access Services Provided By More Than One Telephone Company (Cont'd)

(B) Meet Point Billing (Cont'd)

The Bill Rendering Company in a single bill arrangement for Feature Groups B, C, and D Switched Access Services, is normally the end user's end office, for WATS usage the Bill Rendering Company is normally the WATS Serving Office, for Directory Assistance, the Bill Rendering Company is normally the Directory Assistance Location. The name of the Bill Rendering Company will be included in the meet point billing notification provided to the customer by all the telephone companies on all meet point billed services.

The non Bill Rendering Company(s) is any Telephone Company(s) in whose territory a segment of the Local Transport or Channel Mileage is provided and/or where the customer's Point of Termination is located.

There are two Meet Point Billing Options, Single Bill and Multiple Bill. These billing options are explained in (1) and (2) following. The Single Bill option is the preferred method. However, when a single bill option can not be agreed to by all telephone companies providing service, the multiple bill option is the default.

Each telephone company must provide meet point billing notification to the customer, in writing, when new service is ordered or thirty days prior to changing an existing meet point arrangement. The notification should include the following:

APPROVED FOR FILING - THE PUBLIC SERVICE COMMISSION OF SOUTH CAROLINA - JULY 15, 2014

General Regulations

2.4 Payment Arrangements and Credit Allowances (Cont'd)

2.4.7 Access Services Provided By More Than One Telephone Company (Cont'd)

(B) Meet Point Billing (Cont'd)

- The Meet Point Billing Option that will be used,
- The Telephone Company(s) that will render the bill(s),
- The Telephone Company(s) to whom payment(s) should be remitted, and
- The Telephone Company(s) that will provide the bill inquiry function.

A Telephone Company that renders a meet point bill, the Bill Rendering Company, will render the bill in accordance with the industry standards as described in the Multiple Exchange Carrier Access Billing (MECAB) Guidelines and the Multiple Exchange Carrier Ordering and Design (MECOD) Guidelines. The bill will include cross reference(s) to the other telephone Company(s) providing service and common circuit identifiers. Should a billing dispute arise, the terms and conditions of the Bill Rendering company will apply.

(1) Single Bill Option

The single bill option allows the customer to receive one bill for access services that are provided by more than one company. The single bill option provides the following three billing alternatives:

- Single Bill/Multiple Tariff
- Single Bill/Pass Through Billing, and
- Single Bill/Single Tariff

These options are described following in (a), (b) and (c) respectively.

APPROVED FOR FILING - THE PUBLIC SERVICE COMMISSION OF SOUTH CAROLINA - JULY 15, 2014

General Regulations

2.4 Payment Arrangements and Credit Allowances (Cont'd)

2.4.7 Access Services Provided By More Than One Telephone Company (Cont'd)

(B) Meet Point Billing (Cont'd)

(1) Single Bill Option (Cont'd)

(a) Single Bill/Multiple Tariff

The single bill/multiple tariff bill is prepared by the Bill Rendering Company but reflects all rates and charges for each connecting company's part of the service based on each company's access tariff.

The Bill Rendering Company will:

- determine and include all recurring and nonrecurring rates and charges for each involved Telephone Company;

- identify each involved Telephone Company's rates and charges separately on the bill;

- forward the bill to the customer and provide a copy of the bill or other substantiation of the charges to the connecting Telephone Companies; and

- advise the customer how to remit the payment, either directly to each Telephone Company involved in the provision of this meet point billed service, or, as a single payment made to the Bill Rendering Company. If payments are to be sent directly to the Bill Rendering Company, the non Bill Rendering Company(s) will provide the customer with written authorization for the payment arrangement.

APPROVED FOR FILING - THE PUBLIC SERVICE COMMISSION OF SOUTH CAROLINA - JULY 15, 2014

General Regulations

2.4 Payment Arrangements and Credit Allowances (Cont'd)

2.4.7 Access Services Provided By More Than One Telephone Company (Cont'd)

(B) Meet Point Billing (Cont'd)

(1) Single Bill Option (Cont'd)

(b) Single Bill/Pass-Through Billing

The single bill/pass-through bill is compiled by the Bill Rendering Company. Each Telephone Company will prepare a bill for its portion of the access service and forward it to the Bill Rendering Company. Normally, these connecting telephone company bills are forwarded to the Bill Rendering Company without usage to eliminate possible delays.

Each non Bill Rendering Company will:

- prepare its own bill;
- determine its rates and charges for Local Transport, Directory Transport and/or Channel Mileage as set forth in (3) following;
- determine and include all applicable recurring and nonrecurring rates and charges of its access tariff; and
- forward the bill to the Bill Rendering Company for the meet point access service.

APPROVED FOR FILING - THE PUBLIC SERVICE COMMISSION OF SOUTH CAROLINA - JULY 15, 2014

General Regulations

2.4 Payment Arrangements and Credit Allowances (Cont'd)

2.4.7 Access Services Provided By More Than One Telephone Company (Cont'd)

(B) Meet Point Billing (Cont'd)

(1) Single Bill Option (Cont'd)

(b) Single Bill/Pass-Through Billing (Cont'd)

The Bill Rendering Company will:

- apply usage data, when needed, to the bills and calculate the charges;
- combine all the bills of the involved Telephone Companies providing the meet point access service;
- forward the bill to the customer; and
- advise the customer how to remit the payment, either directly to each Telephone Company involved in the provision of this meet point billed service; or, as a single payment made to the Bill Rendering Company. If payments are to be sent directly to the Bill Rendering Company, the non Bill Rendering Company(s) will provide the customer with written authorization for the payment arrangement.

APPROVED FOR FILING - THE PUBLIC SERVICE COMMISSION OF SOUTH CAROLINA - JULY 15, 2014

General Regulations

2.4 Payment Arrangements and Credit Allowances (Cont'd)

2.4.7 Access Services Provided By More Than One Telephone Company (Cont'd)

(B) Meet Point Billing (Cont'd)

(1) Single Bill Option (Cont'd)

(c) Single Bill/Single Tariff

The single bill/single tariff bill provides a meet point bill that is billed completely at the Billing Rendering Company's tariff rates and regulations.

The Bill Rendering Company will:

- determine and include on the access bill all usage data and all other recurring and nonrecurring rates and charges per its access tariff; and

- forward the bill to the customer

The customer will remit the payment to the Bill Rendering Company.

(2) Multiple Bill Option

Under the Multiple Bill Option each company providing the access service will render an access bill to the customer for its portion of the service based on its access tariff rates and regulations. For switched access Multiple bills, the end office company is generally the Initial Billing Company (IBC). The IBC is the company that calculates the access minutes to be billed to the customer and provides this data to each connecting company providing service, i.e., the Subsequent Billing Company(s). Each company will:

APPROVED FOR FILING - THE PUBLIC SERVICE COMMISSION OF SOUTH CAROLINA - JULY 15, 2014

General Regulations

2.4 Payment Arrangements and Credit Allowances (Cont'd)

2.4.7 Access Services Provided by More Than One Telephone Company (Cont'd)

(B) Meet Point Billing (Cont'd)

(2) Multiple Bill Option (Cont'd)

- prepare its own bill;
- determine its charge(s) for Local Transport, Directory Transport, and/or Channel Mileage as set forth in (3) following;
- determine and include all recurring and nonrecurring rates and charges of its access tariff;
- reflect its Billing Account Reference (BAR) and all connecting company's Billing Account Reference (BACR) code(s);
- forward its bill to the customer.

The customer will remit payment directly to each Bill Rendering Company.

(3) Determination of Meet Point Billed Local Transport, Directory Transport and Channel Mileage Charges

Each Telephone Company's portion of the Local Transport, Directory Transport and Channel Mileage will be developed as follows:

(a) Determine the appropriate Local Transport or Channel Mileage by computing the number of airline miles between the Telephone Company premises (end office, access tandem or serving wire centers for Switched Access or serving wire centers for Special Access) using the V&H method set forth respectively in 6.4.6 and 7.2.5 following.

APPROVED FOR FILING - THE PUBLIC SERVICE COMMISSION OF SOUTH CAROLINA - JULY 15, 2014

General Regulations

2.4 Payment Arrangements and Credit Allowances (Cont'd)

2.4.7 Access Services Provided By More Than One Telephone Company (Cont'd)

(B) Meet Point Billing (Cont'd)

(3) Determination of Meet Point Billed Local Transport, Directory Transport and Channel Mileage Charges (Cont'd)

(b) Determine the billing percentage (BP), as set forth in NATIONAL EXCHANGE CARRIER ASSOCIATION, INC. TARIFF F.C.C. NO. 4, which represents the portion of the service provided by each Telephone Company.

(c) For Feature Groups A, B, C and D Tandem Switched Transport

- Multiply the number of originating and terminating access minutes of use routed over the facility times the number of airline miles, as set forth in (a) preceding, times the BP for each Telephone Company, as set forth in (b) preceding, times the Tandem Switched Facility rate;

- Multiply the Tandem Switched Termination rate times the number of originating and terminating access minutes routed over the facility.

- When a tandem office is located within the operating territory of a Telephone Company participating in NECA's Traffic Sensitive Pool, multiply the Tandem Switching rate times the number of originating and terminating access minutes that are switched at the tandem.

The Tandem Switched Termination rate is applied as set forth in 6.1.3(A) following. The Switched Access Nonrecurring Charges are applied as set forth in 6.4.1(B) following. (Note: The BP is not applied to the Switched Access Tandem Switched Termination rate or any Nonrecurring Charge.)

APPROVED FOR FILING - THE PUBLIC SERVICE COMMISSION OF SOUTH CAROLINA - JULY 15, 2014

General Regulations

2.4 Payment Arrangements and Credit Allowances (Cont'd)

2.4.7 Access Services Provided by More Than One Telephone Company (Cont'd)

(B) Meet Point Billing (Cont'd)

(3) Determination of Meet Point Billed Local Transport, Directory Transport and Channel Mileage Charges (Cont'd)

(d) For Feature Groups A, B, C, and D Direct Trunked Transport:

- multiply the number of airline miles, as set forth in (a) preceding, times the BP for each Telephone Company, as set forth in (b) preceding, times the Direct Trunked Facility rate.

- The Direct Trunked Termination rate is applied as set forth in 6.1.3(A) following. The Switched Access Nonrecurring Charges are applied as set forth in 6.4.1(B) following. (Note: The BP is not applied to either the Switched Access Direct Trunked Termination rate or any Nonrecurring Charge.)

APPROVED FOR FILING - THE PUBLIC SERVICE COMMISSION OF SOUTH CAROLINA - JULY 15, 2014

General Regulations

2.4 Payment Arrangements and Credit Allowances (Cont'd)

2.4.7 Access Services Provided by More Than One Telephone Company (Cont'd)

(B) Meet Point Billing (Cont'd)

(3) Determination of Meet Point Billed Local Transport, Directory Transport and Channel Mileage Charges, (Cont'd)

(e) For Feature Groups A, B, C, and D.

- When the end office (which may be a Remote Switching Module or WATS Serving Office) is located within the operating territory of a Windstream Company, multiply the Residual Interconnection Charge rate times the number of originating and terminating access minutes that are switched at the end office.

- When the Entrance Facility and/or Multiplexing equipment is located within the operating territory of a Windstream Company, the Entrance Facility and/or Multiplexing charge will apply.

- The Billing Percentage (BP) is not applicable to the Residual Interconnection charge, Entrance Facility or Multiplexer.

(f) For Special Access, multiply the number of airline miles, as set forth in (a) preceding, times the BP for each Telephone Company, as set forth in (b) preceding, times the Channel Mileage Facility rate and add 100% of the Channel Mileage Termination rate.

APPROVED FOR FILING - THE PUBLIC SERVICE COMMISSION OF SOUTH CAROLINA - JULY 15, 2014

General Regulations

2.4 Payment Arrangements and Credit Allowances (Cont'd)

2.4.7 Access Services Provided by More Than One Telephone Company (Cont'd)

(B) Meet Point Billing (Cont'd)

(3) Determination of Meet Point Billed Local Transport, Directory Transport and Channel Mileage Charges (Cont'd)

(f) (Cont'd)
The Special Access Channel Mileage Termination rate and nonrecurring charges are applied as set forth in 7.2.1(B)(2) and 7.2.2(C) following. (Note: The BP is not applied to either the Channel Mileage Termination Recurring Rate or any Nonrecurring Charge.)

(g) For Directory Assistance Service, multiply the Directory Transport rate times the number of directory assistance calls times the BP for each Telephone Company, as set forth in (b) preceding.

The Directory Assistance Nonrecurring charge is applied as set forth in 9.4.1(B) following. (Note: The BP is not applied to any Nonrecurring Charge.)

(h) When three or more Telephone Companies are involved in providing an Access Service, the intermediate Telephone Company(s) will determine the appropriate charges as set forth in (c) through (g) preceding. Additionally, when a segment of the Tandem Switched Facility, Direct Trunked Facility or Channel Mileage Facility is measured to the intermediate office(s), the Tandem Switched Termination, Direct Trunked Termination or Channel Mileage Termination rates are also applied at the intermediate Telephone Company(s) office(s).

APPROVED FOR FILING - THE PUBLIC SERVICE COMMISSION OF SOUTH CAROLINA - JULY 15, 2014

General Regulations

2.4 Payment Arrangements and Credit Allowances (Cont'd)

2.4.7 Access Services Provided by More Than One Telephone Company (Cont'd)

(B) Meet Point Billing (Cont'd)

(3) Determination of Meet Point Billed Local Transport, Directory Transport and Channel Mileage Charges (Cont'd)

(i) Example - Switched Access

Layout

- Feature Group D Switched Access is ordered to End Office A.

- End Office A is in operating territory of Windstream.

- Customer designated premises is not in an operating territory of Windstream.

Windstream Company A (TCA) Operating Territory	Telephone Company B (TCB) (Non-NECA) Operating Territory

APPROVED FOR FILING - THE PUBLIC SERVICE COMMISSION OF SOUTH CAROLINA - JULY 15, 2014

General Regulations

2.4 Payment Arrangements and Credit Allowances (Cont'd)

2.4.7 Access Services Provided by More Than One Telephone Company (Cont'd)

(B) Meet Point Billing (Cont'd)

(3) Determination of Meet Point Billed Local Transport, Directory Transport and Channel Mileage Charges (Cont'd)

(i) Example - Switched Access (Cont'd)

The following example reflects the rate calculations for a Windstream End Office. Rates for a Non-Windstream company would appear in that company's access tariff.

- Assume:

Airline miles (ALM) TC A premises to TC B Serving Wire Center = 22.1, rounded = 23.

Billing Percentage (BP)
TC A = 80%
TC B = 20%

Access Minutes (AM) = 9000

Tandem Switched Facility Rates = TSF

Tandem Switched Termination Rate = TST

Tandem Switching Rate = TS

Residual Interconnection Charge = RIC

Carrier Common Line Charge = CCL

End Office Charges = EO

APPROVED FOR FILING - THE PUBLIC SERVICE COMMISSION OF SOUTH CAROLINA - JULY 15, 2014

General Regulations

2.4 Payment Arrangements and Credit Allowances (Cont'd)

2.4.7 Access Services Provided by More Than One Telephone Company (Cont'd)

(B) Meet Point Billing (Cont'd)

(3) Determination of Meet Point Billed Local Transport, Directory Transport and Channel Mileage Charges (Cont'd)

(i) Example - Switched Access (Cont'd)

- Windstream Company A charges are:

Tandem Switched Facility charge
= 9,000 min. x 23 mi. x 80% x TSF rate

Tandem Switched Termination charge
= 9,000 min. x TST rate

Tandem Switching charge
= 9,000 min. x TS rate

Residual Interconnection Charge
= 9,000 min. x RIC rate

Carrier Common Line charge
= 9,000 min. x CCL rate

End Office Charges
= 9,000 min. x EO rates

APPROVED FOR FILING - THE PUBLIC SERVICE COMMISSION OF SOUTH CAROLINA - JULY 15, 2014

General Regulations

2.4 Payment Arrangements and Credit Allowances (Cont'd)

2.4.8 Provision for Gross Receipts Tax

Any customer failing to furnish to the Company the appropriate certificate, issued by the State of South Carolina or its appropriate agency, indicating the customer's exemption from the South Carolina gross receipts tax imposed by South Carolina Rule 12B-6.04, shall pay to the Company an amount equal to the gross receipts tax on the customer's purchase of access services from the Company.

Until the aforementioned certificate is received by the Company, the Company shall calculate the amount of tax owed by the customer and shall bill this amount to the customer. Payment of these charges by the customer shall be subject to the payment arrangements as specified in Section 2.4.1 preceding.

2.5 Connections

Equipment and Systems (i.e., terminal equipment, multiline terminating systems and communications systems) may be connected with Switched and Special Access Service furnished by the Telephone Company where such connection is made in accordance with the provisions specified in Technical Reference Publication AS No.1 and in 2.1 preceding.

APPROVED FOR FILING - THE PUBLIC SERVICE COMMISSION OF SOUTH CAROLINA - JULY 15, 2014

General Regulations

2.6 Definitions

Certain terms used herein are defined as follows:

Access Code

The term "Access Code", with the exception of Feature Group B (FGB) with an Abbreviated Dial Arrangement (ADA), denotes a uniform access code assigned by the Telephone Company to an individual customer in the form 101XXXX, and the 950-XXXX. Access codes for FGB with an ADA are explained in 6.9.2 following.

Access Minutes

For the purpose of calculating chargeable usage, the term "Access Minutes" denotes customer usage of exchange facilities in intrastate or foreign service. On the originating end of an intrastate or foreign call, usage is measured from the time the originating end user's call is delivered by the Telephone Company to and acknowledged as received by the customer's facilities connected with the originating exchange. On the terminating end of an intrastate or foreign call, usage is measured from the time the call is received by the end user in the terminating exchange. Timing of usage at both originating and terminating ends of an intrastate or foreign call shall terminate when the calling or called party disconnects, whichever event is recognized first in the originating and terminating and exchanges, as applicable.

Access Tandem

The term "Access Tandem" denotes a Telephone Company or centralized equal access provider switching system that provides a concentration and distribution function for originating or terminating traffic between end offices and a customer's designated premises.

APPROVED FOR FILING - THE PUBLIC SERVICE COMMISSION OF SOUTH CAROLINA - JULY 15, 2014

General Regulations

2.6 Definitions (Cont'd)

Answer/Disconnect Supervision

The term "Answer/Disconnect Supervision" denotes the transmission of the switch trunk equipment supervisory signal (off-hook or on-hook) to the customer's point of termination as an indication that the called party has answered or disconnected.

Attenuation Distortion

The term "Attenuation Distortion" denotes the difference in loss at specified frequencies relative to the loss at 1004 Hz, unless otherwise specified.

Balance (100 Type) Test Line

The term "Balance (100 Type) Test Line" denotes an arrangement in an end office which provides for balance and noise testing.

Bit

The term "Bit" denotes the smallest unit of information in the binary system of notation.

Business Day

The term "Business Day" denotes the times of day that a company is open for business. Generally, in the business community, these are 8:00 or 9:00 A.M. to 5:00 or 6:00 P.M., respectively, with an hour for lunch, Monday through Friday, resulting in a standard forty (40) hour work week. However, Business Day hours for the Telephone Company may vary based on company policy, union contract and location. To determine such hours for an individual company, or company location, that company should be contacted at the address shown under the Issuing Carrier's name listed on Title Page 2.

APPROVED FOR FILING - THE PUBLIC SERVICE COMMISSION OF SOUTH CAROLINA - JULY 15, 2014

General Regulations

2.6 Definitions (Cont'd)

Busy Hour Minutes of Capacity (BHMC)

The term "Busy Hour Minutes of Capacity (BHMC)" denotes the customer specified maximum amount of Switched Access Service and/or Directory Assistance Service access minutes the customer expects to be handled in an end office switch during any hour in an 8:00 A.M. to 11:00 P.M. period for the Feature Group and/or Directory Assistance Service ordered. This customer specified BHMC quantity is the input data the Telephone Company uses to determine the number of transmission paths for the Feature Group and/or Directory Assistance Service ordered.

Call

The term "Call" denotes a customer attempt for which the complete address information (e.g., 0-, 911, or 10 digits) is provided to the serving dial tone office.

Carrier or Common Carrier

See Interexchange Carrier.

CCS

The term "CCS" denotes a hundred call seconds, which is a standard unit of traffic load that is equal to 100 seconds of usage or capacity of a group of servers (e.g., trunks).

Central Office

See End Office.

APPROVED FOR FILING - THE PUBLIC SERVICE COMMISSION OF SOUTH CAROLINA - JULY 15, 2014

General Regulations

2.6 Definitions (Cont'd)

Central Office Maintenance Technician

The term "Central Office Maintenance Technician" denotes a Telephone Company employee who performs installation and/or repair work, including testing and trouble isolation, within the Telephone Company Central Office.

Central Office Prefix

The term "Central Office Prefix" denotes the first three digits (NXX) of the seven digit telephone number assigned to a customer's Telephone Exchange Service when dialed on a local basis.

Channel(s)

The term "Channel(s)" denotes an electrical or photonic, in the case of fiber optic-based transmission systems, communications path between two or more points of termination.

Channel Service Unit

The term "Channel Service Unit" denotes equipment which performs one or more of the following functions: termination of a digital facility, regeneration of digital signals, detection and/or correction of signal format error, and remote loop back.

Channelize

The term "Channelize" denotes the process of multiplexing-demultiplexing wider bandwidth or higher speed channels into narrower bandwidth or lower speed channels.

Clear Channel Capability

The term "Clear Channel Capability" denotes the ability to transport twenty-four 64 Kbps over a DS1 Mbps High Capacity service via a B8ZS line code format.

C-Message Noise

The term "C-Message Noise" denotes the frequency weighted average noise within an idle voice channel. The frequency weighting, called C-message, is used to simulate the frequency characteristic of the 500-type telephone set and the hearing of the average subscriber.

APPROVED FOR FILING - THE PUBLIC SERVICE COMMISSION OF SOUTH CAROLINA - JULY 15, 2014

General Regulations

2.6 Definitions (Cont'd)

C-Notched Noise

The term "C-Notched Noise" denotes the C-message frequency weighted noise on a voice channel with a holding tone, which is removed at the measuring end through a notch (very narrow band) filter.

Coin Station

See Pay Telephone

Common Channel Signaling

The term "Common Channel Signaling" (CCS) denotes a high speed packet switched communications network which is separate (out of band) from the public packet switched and message networks. Its purpose is to carry addressed signaling messages for individual trunk circuits and/or database related services between Signaling Points in the CCS network.

Common Line

The term "Common Line" denotes a line, trunk, pay telephone line or other facility provided under the general and/or local exchange service tariffs of the Telephone Company, terminated on a central office switch. A common line-residence is a line or trunk provided under the residence regulations of the general and/or local exchange service tariffs. A common line-business is a line provided under the business regulations of the general and/or local exchange service tariffs.

Communications System

The term "Communications System" denotes channels and other facilities which are capable of communications between terminal equipment provided by other than the Telephone Company.

Customer(s)

The term "Customer(s)" denotes any individual, partnership, association, joint-stock company, trust, corporation, or governmental entity or other entity which subscribes to the services offered under this tariff, including both Interexchange Carriers (ICs) and End Users.

APPROVED FOR FILING - THE PUBLIC SERVICE COMMISSION OF SOUTH CAROLINA - JULY 15, 2014

General Regulations

2.6 Definitions (Cont'd)

Customer Designated Premises

The term "Customer Designated Premises" denotes the premises specified by the customer for the provision of Access Service.

Data Transmission (107 Type) Test Line

The term "Data Transmission (107 Type) Test Line" denotes an arrangement which provides for a connection to a signal source which provides test signals for one-way testing of data and voice transmission parameters.

Decibel

The term "Decibel" denotes a unit used to express relative difference in power, usually between acoustic or electric signals, equal to ten (10) times the common logarithm of the ratio of two signal powers.

Decibel Reference Noise C-Message Weighting

The term "Decibel Reference Noise C-Message Weighting" denotes noise power measurements with C-Message Weighting in decibels relative to a reference 1000 Hz tone of 90 dB below 1 milliwatt.

Decibel Reference Noise C-Message Referenced to O

The term "Decibel Reference Noise C-Message Referenced to O" denotes noise power in "Decibel Reference Noise C-Message Weighting" referred to or measured at a zero transmission level point.

Detail Billing

The term "Detail Billing" denotes the listing of each message and/or rate element for which charges to a customer are due on a bill prepared by the Telephone Company.

Digital Switched 56 Service

A switched access optional feature available with Feature Group C and Feature Group D Access, which provides for data transmission at up to 56 kilobits per second.

Directory Assistance

The term "Directory Assistance" denotes the provision of telephone numbers by a Telephone Company operator when the operator location is accessed by a customer by dialing NPA + 555-1212 or 555-1212.

APPROVED FOR FILING - THE PUBLIC SERVICE COMMISSION OF SOUTH CAROLINA - JULY 15, 2014

General Regulations

2.6 Definitions (Cont'd)

Direct-Trunked Transport

The term "Direct-Trunked Transport" denotes transport from the serving wire center to the end office or from the serving wire center to the access tandem on circuits dedicated to the use of a single customer.

Directory Assistance Location

The term "Directory Assistance Location" denotes a Telephone Company office where telephone company equipment first receives the Directory Assistance call from the customer's end user and selects the first operator position to respond to the Directory Assistance call.

Dual Tone Multifrequency Address Signaling

The term "Dual Tone Multifrequency Address Signaling" denotes a type of signaling that is an optional feature of Switched Access Feature Group A. It may be utilized when Feature Group A is being used in the terminating direction (from the point of termination with the customer to the local exchange end office). An office arranged for Dual Tone Multifrequency Signaling would expect to receive address signals from the customer in the form of Dual Tone Multifrequency signals.

Echo Control

The term "Echo Control" denotes the control of reflected signals in a telephone transmission path.

Echo Path Loss

The term "Echo Path Loss" denotes the measure of reflected signal at a 4-wire point of interface without regard to the send and receive Transmission Level Point.

Echo Return Loss

The term "Echo Return Loss" denotes a frequency weighted measure of return loss over the middle of the voiceband (approximately 500 to 2500 Hz), where talker echo is most annoying.

APPROVED FOR FILING - THE PUBLIC SERVICE COMMISSION OF SOUTH CAROLINA - JULY 15, 2014

General Regulations

2.6 Definitions (Cont'd)

Effective Wire

The term "Effective Wire" denotes a condition which permits the simultaneous transmission in both directions over a channel, but it is not possible to insure independent information transmission in both directions. Effective wire channels may be terminated with wire or 4-wire interfaces.

Effective 4-Wire

The term "Effective 4-Wire" denotes a condition which permits the simultaneous independent transmission of information in both directions over a channel. The method of implementing effective 4-wire transmission is at the discretion of the Telephone Company (physical, time domain, frequency-domain separation or echo cancellation techniques). Effective 4-wire channels may be terminated with a wire interface at the customer's premises. However, when terminated wire, simultaneous independent transmission cannot be supported because the two wire interface combines the transmission paths into a single path.

End Office

The term "End Office" denotes a local Telephone Company switching system where Telephone Exchange Service customer station loops are terminated for purposes of interconnection to each other and to trunks. This term includes Remote Switching Modules/Systems served by a Host Central Office in a different wire center.

End User

The term "End User" means any customer of an intrastate or foreign telecommunications service that is not a carrier, except that a carrier other than a telephone company shall be deemed to be an "end user" when such carrier uses a telecommunications service for administrative purposes, and a person or entity that offers telecommunications service exclusively as a reseller shall be deemed to be an "end user" if all resale transmissions offered by such reseller originate on the premises of such reseller.

APPROVED FOR FILING - THE PUBLIC SERVICE COMMISSION OF SOUTH CAROLINA - JULY 15, 2014

General Regulations

2.6 Definitions (Cont'd)

Enhanced Service

The term "Enhanced Service," as defined in Part 64 of the F.C.C.'s Rules and Regulations, are services," offered over common carrier transmission facilities used in interstate communications, which employ computer processing applications that act on the format, content, code, protocol or similar aspects of the subscriber's transmitted information; provide the subscriber additional, different, or restructured information; or involve subscriber interaction with stored information."

Entrance Facility

The term "Entrance Facility" denotes a Switched Access Service dedicated Local Transport facility between the customer's serving wire center and the customer designated premises.

Entry Switch

See First Point of Switching

Envelope Delay Distortion

The term "Envelope Delay Distortion" denotes a measure of the linearity of the phase versus frequency of a channel.

Equal Level Echo Path Loss

The term "Equal Level Echo Path Loss" (ELEPL) denotes the measure of Echo Path Loss (EPL) at a 4-wire interface which is corrected by the difference between the send and receive Transmission Level Point (TLP). [ELEPL = EPL - TLP (send) + TLP (receive)].

APPROVED FOR FILING - THE PUBLIC SERVICE COMMISSION OF SOUTH CAROLINA - JULY 15, 2014

General Regulations

2.6 Definitions (Cont'd)

Exchange

The term "Exchange" denotes a unit generally smaller than a local access and transport area, established by the Telephone Company for the administration of communications service in a specified area which usually embraces a city, town or village and its environs. It consists of one or more central offices together with the associated facilities used in furnishing communications service within that area. The exchange includes any Extended Area Service area that is an enlargement of a Telephone Company's exchange area to include nearby exchanges. One or more designated exchanges comprise a given local access and transport area.

Exit Message

The term "Exit Message" denotes an SS7 message sent to an end office by the Telephone Company's tandem switch to mark the Carrier Connect Time when the Telephone Company's tandem switch sends an Initial Address Message to an interexchange customer.

APPROVED FOR FILING - THE PUBLIC SERVICE COMMISSION OF SOUTH CAROLINA - JULY 15, 2014

General Regulations

2.6 Definitions (Cont'd)

Expected Measured Loss

The term "Expected Measured Loss" denotes a calculated loss which specifies the end-to-end 1004-Hz loss on a terminated test connection between two readily accessible manual or remote test points. It is the sum of the inserted connection loss and test access loss including any test pads.

Extended Area Service See Exchange.

First Point of Switching

The term "First Point of Switching" denotes the first Telephone Company or centralized equal access provider location at which switching occurs on the terminating path of a call proceeding from the customer designated premises to the terminating end office and, at the same time, the last Telephone Company or centralized equal access provider location at which switching occurs on the originating path of a call proceeding from the originating end office to the customer designated premises.

Frequency Shift

The term "Frequency Shift" denotes the change in the frequency of a tone as it is transmitted over a channel.

Grandfathered

The term "Grandfathered" denotes Terminal Equipment, Multiline Terminating Systems and Protective Circuitry directly connected to the facilities utilized to provide services under the provisions of this tariff, and which are considered grandfathered under Part 68 of the F.C.C.'s Rules and Regulations.

Host Central Office

The term "Host Central Office" denotes an electronic local Telephone Company End Office where Telephone Exchange Service customer station loops are terminated for purposes of interconnection to each other and to trunks. Additionally, this type of End Office contains the central call processing functions which service itself and its Remote Switching Modules/Systems.

Hub

The term “Hub” denotes a wire center at which bridging or multiplexing functions are performed for customers served out of any wire center.

APPROVED FOR FILING - THE PUBLIC SERVICE COMMISSION OF SOUTH CAROLINA - JULY 15, 2014

General Regulations

2.6 Definitions (Cont'd)

Immediately Available Funds

The term "Immediately Available Funds" denotes a corporate or personal check drawn on a bank account and funds which are available for use by the receiving party on the same day on which they are received and include U.S. Federal Reserve bank wire transfers, U.S. Federal Reserve notes (paper cash), U.S. coins, U.S. Postal Money Orders and New York Certificates of Deposit.

Impedance Balance

The term "Impedance Balance" denotes the method of expressing Echo Return Loss and Singing Return Loss at a 4-wire interface whereby the gains and/or loss of the 4-wire portion of the transmission path, including the hybrid, are not included in the specification.

Impulse Noise

The term "Impulse Noise" denotes any momentary occurrence of the noise on a channel over a specified level threshold. It is evaluated by counting the number of occurrences which exceed the threshold.

Individual Case Basis

The term "Individual Case Basis" denotes a condition in which the regulations, if applicable, rates and charges for an offering under the provisions of this tariff are developed based on the circumstances in each case.

Initial Address Message

The term "Initial Address Message" denotes an SS7 message sent in the forward direction to initiate trunk set up, reserve an outgoing trunk and process the information about that trunk along with other data relating to the routing and handling of the call to the next switch.

Inserted Connection Loss

The term "Inserted Connection Loss" denotes the 1004 Hz power difference (in dB) between the maximum power available at the originating end and the actual power reaching the terminating end through the inserted connection.

APPROVED FOR FILING - THE PUBLIC SERVICE COMMISSION OF SOUTH CAROLINA - JULY 15, 2014

General Regulations

2.6 Definitions (Cont'd)

Installation and Repair Technician

The term "Installation and Repair Technician" denotes a Telephone Company employee who performs installation and/or repair work, including testing and trouble isolation, outside of the Telephone Company Central Office and generally at the customer's designated premises.

Interexchange Carrier (IC) or Interexchange Common Carrier

The terms "Interexchange Carrier" (IC) or "Interexchange Common Carrier" denotes any individual, partnership, association, joint-stock company, trust, governmental entity or corporation engaged for hire in interstate or foreign communication by wire or radio, between two or more exchanges.

Intermediate Hub

The term " Intermediate Hub" denotes a wire center at which bridging or multiplexing functions are performed only for customers served by that wire center and wire centers that subtend the hub, as specified in National Exchange Carrier Association, Inc. Tariff F.C.C. No. 4.

Intermodulation Distortion

The term "Intermodulation Distortion" denotes a measure of the nonlinearity of a channel. It is measured using four tones, and evaluating the ratios (in dB) of the transmitted composite four-tone signal power to the second-order products of the tones (R2), and the third-order products of the tones (R3).

Interstate Communications

The term "Interstate Communications" denotes both interstate and foreign communications.

Intrastate Communications

The term "Intrastate Communications" denotes any communications within a state subject to oversight by a state regulatory commission as provided by the laws of the state involved.

APPROVED FOR FILING - THE PUBLIC SERVICE COMMISSION OF SOUTH CAROLINA - JULY 15, 2014

General Regulations

2.6 Definitions (Cont'd)

Legal Holiday

The term "Legal Holiday" denotes days other than Saturday or Sunday for which the Telephone Company is normally closed. These include New Year's Day, Independence Day, Thanksgiving Day, Christmas Day and a day when Washington's Birthday, Memorial Day or Columbus Day is legally observed and other locally observed holidays when the Telephone Company is closed.

Line Side Connection

The term "Line Side Connection" denotes a connection of a transmission path to the line side of a local exchange switching system.

Local Access and Transport Area (LATA)

The term "Local Access and Transport Area" denotes a geographic area established for the provision and administration of communications service. It encompasses one or more designated exchanges, which are grouped to serve common social, economic and other purposes.

Loss Deviation

The term "Loss Deviation" denotes the variation of the actual loss from the designed value.

Major Fraction Thereof

The term "Major Fraction Thereof" denotes any period of time in excess of 1/2 of the stated amount of time. As an example, in considering a period of 24 hours, a major fraction thereof would be any period of time in excess of 12 hours exactly. Therefore, if a given service is interrupted for a period of thirty-six hours and fifteen minutes, the customer would be given a credit allowance for two twenty-four hour periods for a total of forty-eight hours.

Message

The term "Message" denotes a "call" as defined preceding.

APPROVED FOR FILING - THE PUBLIC SERVICE COMMISSION OF SOUTH CAROLINA - JULY 15, 2014

General Regulations

2.6 Definitions (Cont'd)

Milliwatt (102 Type) Test Line

The term "Milliwatt (102 Type) Test Line" denotes an arrangement in an end office which provides a 1004 Hz tone at 0 dBm0 for one-way transmission measurements towards the customer's premises from the Telephone Company end office.

Network Control Signaling

The term "Network Control Signaling" denotes the transmission of signals used in the telecommunications system which perform functions such as supervision (control, status, and charge signals), address signaling (e.g., dialing), calling and called number identifications, rate of flow, service selection error control and audible tone signals (call progress signals indicating re-order or busy conditions, alerting, coin denominations, coin collect and coin return tones) to control the operation of the telecommunications system.

Nonsynchronous Test Line

The term "Nonsynchronous Test Line" denotes an arrangement in step-by-step end offices which provides operational tests which are not as complete as those provided by the synchronous test lines, but can be made more rapidly.

North American Numbering Plan

The term "North American Numbering Plan" denotes a three-digit area code (Numbering Plan Area - NPA) and a seven-digit telephone number made up of a three-digit Central Office prefix plus a four-digit station number.

Off-hook

The term "Off-hook" denotes the active condition of Switched Access or a Telephone Exchange Service line.

APPROVED FOR FILING - THE PUBLIC SERVICE COMMISSION OF SOUTH CAROLINA - JULY 15, 2014

General Regulations

2.6 Definitions (Cont'd)

On-hook

The term "On-hook" denotes the idle condition of Switched Access or a Telephone Exchange Service line.

Open Circuit Test Line

The term "Open Circuit Test Line" denotes an arrangement in an end office which provides an ac open circuit termination of a trunk or line by means of an inductor of several Henries.

Originating Direction

The term "Originating Direction" denotes the use of access service for the origination of calls from an End User Premises to an IC Premises.

Pay Telephone

The term "Pay Telephone" denotes a coin or coinless instrument provided in a public or semipublic place where Payphone Service Provider customers can originate telephonic communications and pay the applicable charges by (1) inserting coins into the equipment, or (2) using a credit card, or (3) third party billing the call or (4) calling collect.

Phase Jitter

The term "Phase Jitter" denotes the unwanted phase variations of a signal.

Point of Termination

The term "Point of Termination" denotes the point of demarcation within a customer-designated premises at which the Telephone Company's responsibility for the provision of Access Service ends.

Premises

The term "Premises" denotes a building or buildings on continuous property (except Railroad Right-of-Way, etc.) not separated by a public highway.

Payphone Service Provider

The term “Payphone Service Provider” denotes an entity that provides pay telephone service, which is the provision of public, semi-public, or inmate pay telephone service.

APPROVED FOR FILING - THE PUBLIC SERVICE COMMISSION OF SOUTH CAROLINA - JULY 15, 2014

General Regulations

2.6 Definitions (Cont'd)

Release Message

The term "Release Message" denotes an SS7 message sent in either direction to indicate that a specific circuit is being released.

Remote Switching Modules/Systems

The term "Remote Switching Modules/Systems" denotes small, remotely controlled electronic end office switches which obtain their call processing capability from an electronic Host Central Office. The Remote Switching Modules/Systems cannot accommodate direct trunks to an IC.

Return Loss

The term "Return Loss" denotes a measure of the similarity between the two impedances at the junction of two transmission paths. The higher the return loss, the higher the similarity.

Registered Equipment

The term "Registered Equipment" denotes the customer's premises equipment which complies with and has been approved within the Registration Provisions of Part 68 of the F.C.C.'s Rules and Regulations.

APPROVED FOR FILING - THE PUBLIC SERVICE COMMISSION OF SOUTH CAROLINA - JULY 15, 2014

General Regulations

2.6 Definitions (Cont'd)

Service Access Code

The term "Service Access Code" denotes a 3 digit code in the NPA format which is used as the first three digits of a 10 digit address and which is assigned for special network uses. Whereas NPA codes are normally used for identifying specific geographical areas, certain Service Access Codes have been allocated in the North American Numbering Plan to identify generic services or to provide access capability. Examples of Service Access Codes include the 800, 888, 877 (C)
and 900 codes.

Service Switching Point (SSP)

The term “Service Switching Point” denotes an end office or tandem which, in addition to having SS7 and SP capabilities, is also equipped to query centralized data bases.

Serving Wire Center

The term "Serving Wire Center" denotes the wire center from which the customer designated premises would normally obtain dial tone from the Telephone Company.

Seven Digit Manual Test Line

The term "Seven Digit Manual Test Line" denotes an arrangement which allows the Customer to select balance, milliwatt and synchronous test lines by manually dialing a seven digit number over the associated access connection.

Shortage of Facilities or Equipment

The term "Shortage of Facilities or Equipment" denotes a condition which occurs when the Telephone Company does not have appropriate cable, switching capacity, bridging or, multiplexing equipment, etc., necessary to provide the Access Service requested by the customer.

APPROVED FOR FILING - THE PUBLIC SERVICE COMMISSION OF SOUTH CAROLINA - JULY 15, 2014

General Regulations

2.6 Definitions (Cont'd)

Short Circuit Test Line

The term "Short Circuit Test Line" denotes an arrangement in an end office which provides for an ac short circuit termination of a trunk or line by means of a capacitor of at least four microfarads.

Signal-to-C-Notched Noise Ratio

The term "Signal-to-C-Notched Noise Ratio" denotes the ratio in dB of a test signal to the corresponding C-Notched Noise.

Signaling Point (SP)

The term "Signaling Point (SP)" denotes an SS7 network interface element capable of originating and terminating SS7 trunk signaling messages.

Signaling Point of Interface (SPOI)

The term “Signaling Point of Interface (SPOI)” denotes the customer designated location where the SS7 signaling information is exchanged between the Telephone Company and the customer.

Signaling Return Loss

The term "Signaling Return Loss" denotes the frequency weighted measure of return loss at the edges of the voiceband (200 to 500 Hz and 2500 to 3200 Hz), where singing (instability) problems are most likely to occur.

Signaling System 7 (SS7)

The term "Signaling System 7 (SS7)" denotes the layered protocol used for standardized common channel signaling in the United States and Puerto Rico.

Signal Transfer Point (STP)

The term "Signal Transfer Point (STP)" denotes a packet switch which provides access to the Telephone Company's SS7 network and performs SS7 message signal routing and screening.

Signal Transfer Point (STP) Port

The term "Signal Transfer Point (STP) Port" denotes the point of termination and interconnection to the STP.

APPROVED FOR FILING - THE PUBLIC SERVICE COMMISSION OF SOUTH CAROLINA - JULY 15, 2014

General Regulations

2.6 Definitions (Cont'd)

Special Order

The term "Special Order" denotes an order for a Directory Assistance Service.

Subtending End Office of an Access Tandem

The term "Subtending End Office of an Access Tandem" denotes an end office that has final trunk group routing through that tandem.

Super Intermediate Hub

The term " Super Intermediate Hub" denotes a wire center at which bridging or multiplexing functions are performed for Customers served by all wire centers in the LATA. A Super Intermediate Hub can be restricted to one or more designated NPAs within a LATA and/or to wire centers that are owned by the same telephone company as the hub. Super Intermediate Hubs and the wire centers they serve are identified in National Exchange Carrier Association, Inc. Tariff F.C.C. No. 4.

Synchronous Test Line

The term "Synchronous Test Line" denotes an arrangement in an end office which performs marginal operational tests of supervisory and ring-tripping functions.

Tandem Switched Transport

The term "Tandem Switched Transport" denotes transport from the serving wire center to the end office, or from the tandem to the end office, that is switched at a tandem.

Terminating Direction

The term " Terminating Direction" denotes the use of Access Service for the completion of calls from an IC premises to an End User Premises.

Terminus Hub

The term "Terminus Hub" denotes a wire center at which bridging or multiplexing functions are performed only for Customers served directly by the same wire center.

APPROVED FOR FILING - THE PUBLIC SERVICE COMMISSION OF SOUTH CAROLINA - JULY 15, 2014

2.6 Definitions (Cont'd)

Throughput

The term “Throughput” denotes the number of data bits successfully transferred in one direction per unit of time.

Transmission Measuring (105 Type) Test Line/Responder

The term “Transmission Measuring (105 Type) Test Line/Responder” denotes an arrangement in an end office which provides far-end access to a responder and permits two-way loss and noise measurements to be made on trunks from a near end office.

Transmission Path

The term "Transmission Path" denotes an electrical path capable of transmitting signals within the range of the service offering, e.g., a voice grade transmission path is capable of transmitting voice frequencies within the approximate range of 300 to 3000 Hz. A transmission path is comprised of physical or derived facilities consisting of any form or configuration of plant typically used in the telecommunications industry.

APPROVED FOR FILING - THE PUBLIC SERVICE COMMISSION OF SOUTH CAROLINA - JULY 15, 2014

General Regulations

2.6 Definitions (Cont'd)

Trunk

The term "Trunk" denotes a communications path connecting two switching systems in a network, used in the establishment of an end-to-end connection.

Trunk Group

The term "Trunk Group" denotes a set of trunks which are traffic engineered as a unit for the establishment of connections between switching systems in which all of the communications paths are interchangeable.

Trunk Side Connection

The term "Trunk Side Connection" denotes the connection of a transmission path to the trunk side of a local exchange switching system.

Two-Wire to Four-Wire Conversion

The term "Two-Wire to Four-Wire Conversion" denotes an arrangement which converts a four-wire transmission path to a two-wire transmission path to allow a four-wire facility to terminate in a two-wire entity (e.g., a central office switch).

V and H Coordinates Method

The term "V and H Coordinates Method" denotes a method of computing airline miles between two points by utilizing an established formula which is based on the vertical and horizontal coordinates of the two points.

WATS Serving Office

The term "WATS Serving Office" denotes a Telephone Company designated serving wire center where switching, screening and/or recording functions are performed in connection with the closed-end of WATS or WATS-type services.

Wireless Switching Center

The term “Wireless Switching Center” (WSC) denotes a Wireless Service Provider (WSP) switching system that is used to terminate wireless stations for purposes of interconnection to each other and to trunks interfacing with the public switched network.

APPROVED FOR FILING - THE PUBLIC SERVICE COMMISSION OF SOUTH CAROLINA - JULY 15, 2014

General Regulations

2.6 Definitions (Cont'd)

Wire Center

The term "Wire Center" denotes a building in which one or more central offices, used for the provision of Telephone Exchange Services, are located.

APPROVED FOR FILING - THE PUBLIC SERVICE COMMISSION OF SOUTH CAROLINA - JULY 15, 2014

Carrier Common Line Access Service

CONTENTS

		Page No.
3.1	General Description	1
3.2	Limitations	2
3.2.1	Exclusions	2
3.2.2	Access Groups	2
3.2.3	WATS Access Lines	2
3.3	Undertaking of the Telephone Company	3
3.3.1	Provision of Service	3
3.3.2	Interstate and Intrastate Use	3
3.4	Obligations of the Customer	3
3.4.1	Switched Access Service Requirement	3
3.4.2	Supervision	3
3.5	Determination of Usage Subject to Carrier Common Line Access Charges	4
3.5.1	Determination of Jurisdiction	4
3.5.2	Cases Involving Usage Recording By the Customer	4
3.5.3	Local Exchange Access and the Enhanced Services Exemption	5
3.6	Resold Services	6
3.6.1	Scope	6
3.6.2	Customer Obligations Concerning the Resale of MTS and MTS-type Services	7
3.6.3	Resale Documentation Provided by the Customer	8
3.6.4	Rate Regulations Concerning the Resale of MTS and MTS-type Services	9
3.7	Reserved for Future Use	18
3.8	Rate Regulations	19
3.8.1	Billing of Charges	19
3.8.2	Measuring and Recording of Call Detail	19
3.8.3	Unmeasured Feature Group A and B Usage	20
3.8.4	Percent Intrastate Use (PIU)	20
3.8.5	Determination of Premium and Non-Premium Charges	21

APPROVED FOR FILING - THE PUBLIC SERVICE COMMISSION OF SOUTH CAROLINA - JULY 15, 2014

Carrier Common Line Access Service

The Telephone Company will provide Carrier Common Line Access Service (Carrier Common Line Access) to customers in conjunction with Switched Access Service provided in Section 6. of this tariff.

3.1 General Description

Carrier Common Line Access provides for the use of end users' Telephone Company provided common lines by customers for access to such end users to furnish Intrastate Communications.

Premium Access is (1) Switched Access Service provided to customers under this tariff which furnish Intrastate MTS/WATS, and (2) Switched Access Service in an end office converted to equal access.

Non Premium Access is Switched Access Service provided in an end office not yet converted to equal access to customers that do not furnish Intrastate MTS/WATS.

A Special Access Surcharge, as set forth in 17.3.1 following, will apply to Intrastate special access service provided by the Telephone Company to a customer, in accordance with regulations as set forth in 7.3 following.

APPROVED FOR FILING - THE PUBLIC SERVICE COMMISSION OF SOUTH CAROLINA - JULY 15, 2014

Carrier Common Line Access Service

3.2 Limitations

3.2.1 Exclusions

Neither a telephone number nor detail billing are provided with Carrier Common Line Access. Additionally, directory listings and intercept arrangements are not included in the rates and charges for Carrier Common Line Access.

3.2.2 Access Groups

All line side connections provided in the same access group will be limited to the same features and operating characteristics.

All trunk side connections provided in the same access group will be limited to the same features and operating characteristics.

3.2.3 WATS Access Lines

Where Switched Access Services are connected with Special Access Services at Telephone Company Designated WATS Serving Offices for the provision of WATS or WATS-type Services, Switched Access Service minutes which are carrier on that end of the service (i.e., originating minutes for outward WATS and WATS-type services and terminating minutes for inward WATS and WATS-type services) shall not be assessed Carrier Common Line Access per minute charges with the following exception. Carrier Common Line Access per minute charges shall apply when Feature Group A or Feature Group B switched access is ordered from a non-equal access telephone company office that does not have measurement capabilities and the assumed average access minutes, as set forth in the exchange carrier's access tariff are used.

APPROVED FOR FILING - THE PUBLIC SERVICE COMMISSION OF SOUTH CAROLINA - JULY 15, 2014

Carrier Common Line Access Service

3.3 Undertaking of the Telephone Company

3.3.1 Provision of Service

Where the Customer is provided Switched Access Service under other sections of this or other Access Service tariffs, the Telephone Company will provide the use of Telephone Company common lines by a customer for access to end users at rates and charges as set forth in 17.1.1 following.

3.3.2 Interstate and Intrastate Use

The Switched Access Service provided by the Telephone Company includes the Switched Access Service provided for both interstate and intrastate communications. The Carrier Common Line Access rates and charges as set forth in 17.1.1 following apply to Intrastate Switched Access Service access minutes in accordance with the rate regulations as set forth in 3.8.4 following (Percent Intrastate Use - PIU).

3.4 Obligations of the Customer

3.4.1 Switched Access Service Requirement

The Switched Access Service associated with Carrier Common Line Access shall be ordered by the Customer under other sections of this tariff.

3.4.2 Supervision

The Customer facilities at the premises of the ordering customer shall provide the necessary on-hook and off-hook supervision.

APPROVED FOR FILING - THE PUBLIC SERVICE COMMISSION OF SOUTH CAROLINA - JULY 15, 2014

Carrier Common Line Access Service

3.5 Determination of Usage Subject to Carrier Common Line Access Charges

Except as set forth herein, all Switched Access Service provided to the Customer will be subject to Carrier Common Line Access charges.

3.5.1 Determination of Jurisdiction

When the Customer reports Interstate and intrastate use of Switched Access Service, the associated Carrier Common Line Access used by the Customer for Intrastate will be determined as set forth in 3.8.4 following (PIU).

3.5.2 Cases Involving Usage Recording by the Customer

Where Feature Group C (FGC) end office switching is provided without Telephone Company recording and the Customer records minutes of use used to determine Carrier Common Line Access charges (i.e., FGC operator and calls such as pay telephone sent-paid, operator-DDD, operator-person, collect, credit-card, third number and/or other like calls), the Customer shall furnish such minutes of use detail to the Telephone Company in a timely manner. If the Customer does not furnish the data, the Customer shall identify all Switched Access Services which could carry such calls in order for the Telephone Company to accumulate the minutes of use through the use of special Telephone Company measuring and recording equipment.

APPROVED FOR FILING - THE PUBLIC SERVICE COMMISSION OF SOUTH CAROLINA - JULY 15, 2014

Carrier Common Line Access Service

3.5 Determination of Usage Subject to Carrier Common Line Access Charges (Cont'd)

3.5.3 Local Exchange Access and Enhanced Services Exemption

When access to the local exchange is required to provide a customer service (e.g., MTS/WATS-type, telex, Data, etc.) that uses a resold Special Access service, Switched Access Service Rates and Regulations, as set forth in Section 6. following will apply, except when such access to the local exchange is required for the provision of an enhanced service. Carrier Common Line Access rates and charges as set forth in 17.1.1 following apply in accordance with the resale rate regulations as set forth in 3.6.4 following.

APPROVED FOR FILING - THE PUBLIC SERVICE COMMISSION OF SOUTH CAROLINA - JULY 15, 2014

Carrier Common Line Access Service

3.6 Resold Services

3.6.1 Scope

Where the Customer is reselling MTS and/or MTS-type service(s) on which the Carrier Common Line and Switched Access charges have been assessed, the Customer may, at the option of the Customer, obtain Feature Group A, Feature Group B or Feature Group D Switched Access Service under this tariff as set forth in Section 6. following for originating and/or terminating access in the local exchange. Such access group arrangements whether single lines or trunks or multiline hunt groups or trunk groups will have Carrier Common Line Access charges applied as set forth in 17.1.1 following in accordance with the resale rate regulations set forth in 3.6.4 following. For purposes of administering this provision:

Resold Intrastate terminating MTS and MTS-type service(s) shall include collect calls, third number calls and credit card calls where the reseller pays the underlying carrier's service charges; and shall not include intrastate minutes of use.

Resold Intrastate originating MTS and MTS-type service(s) shall not include collect, third number, credit card or intrastate minutes of use.

APPROVED FOR FILING - THE PUBLIC SERVICE COMMISSION OF SOUTH CAROLINA - JULY 15, 2014

Carrier Common Line Access Service

3.6 Resold Services (Cont'd)

3.6.2 Customer Obligations Concerning the Resale of MTS and MTS-type Services

When the Customer is reselling MTS and/or MTS-type service as set forth in 3.6.1 preceding, the Customer will be charged Carrier Common Line Access charges in accordance with the resale rate regulations as set forth in 3.6.4 following if the Customer or the provider of the MTS service furnishes documentation of the MTS-type usage. Such documentation supplied by the Customer shall be supplied each month and shall identify the involved resold MTS and/or MTS-type services.

The monthly period used to determine the minutes of use for resold MTS and/or MTS-type service(s) shall be the most recent monthly period for which the Customer has received a bill for such resold service(s). This information shall be delivered to the Telephone Company, at a location specified by the Telephone Company, no later than 15 days after the bill date shown on the resold MTS and/or MTS-type service bill. If the required information is not received by the Telephone Company, the previously reported information, as described preceding, will be used for the next two months. For any subsequent month, no allocation or credit will be made until the required documentation is delivered to the Telephone Company by the Customer.

APPROVED FOR FILING - THE PUBLIC SERVICE COMMISSION OF SOUTH CAROLINA - JULY 15, 2014

3.6 Resold Services (Cont'd)

3.6.3 Resale Documentation Provided By the Customer

When the Customer utilizes Switched Access Service as set forth in 3.6.2 preceding, the Telephone Company may request a certified copy of the Customer's resold MTS or MTS-type usage billing from either the Customer or the provider of the MTS or MTS-type service. Requests for billing will relate back no more than 12 months prior to the current billing period.

APPROVED FOR FILING - THE PUBLIC SERVICE COMMISSION OF SOUTH CAROLINA - JULY 15, 2014

3.6 Resold Services (Cont'd)

3.6.4 Rate Regulations Concerning the Resale of MTS and MTS-type Services

When the Customer is provided an access group to be used in conjunction with the resale of MTS and/or MTS-type services as set forth in 3.6.1 preceding, subject to the limitations as set forth in 3.2 preceding, and the billing entity receives the usage information required as set forth in 3.6.2 preceding, to calculate the adjustment of Carrier Common Line Access charges, the Customer will be billed as set forth in (D), (E) or (F) following, depending upon, respectively, whether the usage is from non-equal access offices, equal access offices or a combination of the two.

(A) Apportionment and Adjustment of Resold Minutes of Use

When the Customer is provided with more than one access group in a LATA in association with the resale of MTS and/or MTS-type services, the resold minutes of use will be apportioned as follows:

(1) Originating Services

The Telephone Company will apportion the resold originating MTS and/or MTS-type services and originating minutes of use for which the resale credit adjustment applies, among the access groups. Such apportionment will be based on the relationship of the originating usage for each access group to the total originating usage for all access groups in the LATA. For purposes of administering this provision:

APPROVED FOR FILING - THE PUBLIC SERVICE COMMISSION OF SOUTH CAROLINA - JULY 15, 2014

Carrier Common Line Access Service

3.6 Resold Services (Cont'd)

3.6.4 Rate Regulations Concerning the Resale of MTS and MTS-type Services (Cont'd)

(A) Apportionment and Adjustment of Resold Minutes of Use (Cont'd)

(1) Originating Services (Cont'd)

Resold originating MTS and/or MTS-type services minutes shall be only those attributable to Intrastate originating MTS and/or MTS-type minutes and shall not include collect, third number, credit card or intrastate minutes of use.

The resale credit adjustment shall apply for resold originating MTS and MTS-type services and minutes of use, provided Carrier Common Line and Switched Access Charges have been assessed on such services.

(2) Terminating Services

The Telephone Company will apportion the resold terminating MTS and/or MTS-type services and terminating minutes of use for which the resale credit adjustment applies, among the access groups. Such apportionment will be based on the relationship of the terminating usage for each access group to the total terminating usage for all access groups in the LATA. For purposes of administering this provision:

APPROVED FOR FILING - THE PUBLIC SERVICE COMMISSION OF SOUTH CAROLINA - JULY 15, 2014

Carrier Common Line Access Service

3.6 Resold Services (Cont'd)

3.6.4 Rate Regulations Concerning the Resale of MTS and MTS-type Services (Cont'd)

(A) Apportionment and Adjustment of Resold Minutes of Use (Cont'd)

(2) Terminating Services

Resold terminating MTS and/or MTS-type services minutes shall be only those attributable to Intrastate terminating MTS/MTS-type (i.e., collect calls, third number calls, and credit card calls) and shall not include intrastate minutes of use or MTS/MTS-type minutes of use paid for by another party.

The resale credit adjustment shall apply for resold terminating MTS and MTS-type services and minutes of use, provided Carrier Common Line and Switched Access Charges have been assessed on such services.

(B) Same State/Telephone Company/Exchange Limitation

In order for the rate regulations to apply as set forth in (D), (E) or (F) following, the access groups and the resold MTS and/or MTS-type services must be provided in the same state (except when the same extended area service arrangement is provided in two different states by the same telephone company) in the same exchange, provided by the same Telephone Company and connected directly or indirectly. For those exchanges that encompass more than one state, the Customer shall report the information by state within the exchange.

APPROVED FOR FILING - THE PUBLIC SERVICE COMMISSION OF SOUTH CAROLINA - JULY 15, 2014

Carrier Common Line Access Service

3.6 Resold Services (Cont'd)

3.6.4 Rate Regulations Concerning the Resale of MTS and MTS-type Services (Cont'd)

(C) Direct and Indirect Connections

Each of the access group arrangements used by the Customer in association with the resold MTS and/or MTS-type services must be connected either directly or indirectly to the Customer designated premises at which the resold MTS and/or MTS-type services are terminated. Direct connections are those arrangements where the access groups and resold MTS and/or MTS-type services are terminated at the same customer designated premises.

Indirect originating connections are those arrangements where the access groups and the resold originating MTS and/or MTS-type services are physically located at different customer designated premises in the same exchange. Such different customer designated premises are connected by facilities that permit a call to flow from access groups to resold MTS and/or MTS-type services.

Indirect terminating connections are those arrangements where the access groups and resold terminating MTS and/or MTS-type services are physically located at different customer designated premises in the same exchange. Such different customer designated premises are connected by facilities that permit a call to flow from resold terminating MTS and/or MTS-type services to access groups.

APPROVED FOR FILING - THE PUBLIC SERVICE COMMISSION OF SOUTH CAROLINA - JULY 15, 2014

Carrier Common Line Access Service

3.6 Resold Services (Cont'd)

3.6.4 Rate Regulations Concerning the Resale of MTS and MTS-type Services (Cont'd)

(D) Access Groups - Non-Equal Access Offices Only

The adjustments as set forth here and in (E) and (F) following will be computed separately for each access group.

When all the usage on an access group originates from and/or terminates at end offices that have not been converted to equal access the Non Premium Access Charge per minute as set forth in 17.1.1 following will apply. The Access Minutes which will be subject to Carrier Common Line Access charges will be the adjusted originating Intrastate access minutes plus the adjusted terminating Intrastate access minutes for such access groups.

The adjusted originating access minutes will be the originating Intrastate access minutes less the reported resold originating MTS and/or MTS-type service minutes of use as set forth (A)(1) preceding; but not less than zero. The adjusted terminating access minutes will be the terminating Intrastate access minutes less the reported resold terminating MTS and/or MTS-type service minutes of use as set forth in (A)(2) preceding; but not less than zero.

APPROVED FOR FILING - THE PUBLIC SERVICE COMMISSION OF SOUTH CAROLINA - JULY 15, 2014

3.6 Resold Services (Cont'd)

3.6.4 Rate Regulations Concerning the Resale of MTS and MTS-type Services (Cont'd)

(E) Access Groups - Equal Access Offices Only

When all the usage on an access group originates from and/or terminates at end offices that have been converted to equal access the Premium Access Charge per minute as set forth in 17.1.1 following will apply. The minutes billed Carrier Common Line Access Service charges will be the adjusted originating Intrastate access minutes and the adjusted terminating Intrastate access minutes for such access groups.

The adjusted originating access minutes will be the originating Intrastate access minutes less the reported resold originating MTS and/or MTS-type service minutes of use as set forth in (A)(1) preceding; but not less than zero. The adjusted terminating access minutes will be the terminating Intrastate access minutes less the reported resold terminating MTS and/or MTS-type service minutes of use as set forth in (A)(2) preceding; but not less than zero.

APPROVED FOR FILING - THE PUBLIC SERVICE COMMISSION OF SOUTH CAROLINA - JULY 15, 2014

3.6 Resold Services (Cont'd)

3.6.4 Rate Regulations Concerning the Resale of MTS and MTS-type Services (Cont'd)

(F) Access Groups - Non-Equal Access and Equal Access Offices

When an access group has usage that originates from and/or terminates at both end offices that have been converted to equal access and end offices that have not been converted, both premium and non-premium per minute charges as set forth in 17.1.1 following will apply respectively. The minutes billed Carrier Common Line Access Service charges will be the adjusted originating Intrastate access minutes plus the adjusted terminating Intrastate access minutes for such access groups.

The adjusted originating access minutes will be the originating Intrastate access minutes less the reported resold originating MTS and/or MTS-type service minutes of use as set forth in (A)(1) preceding; but not less than zero. The adjusted terminating access minutes will be the terminating Intrastate access minutes less the reported resold terminating MTS and/or MTS-type service minutes of use as set forth in (A)(2) preceding; but not less than zero.

The adjusted originating access minutes and the adjusted terminating access minutes will be apportioned between premium and non-premium access minutes using end-office specific usage data when available, or when usage data are not available, the premium and non-premium ratios developed as set forth in 6.4.1(C)(4) following. The Premium and Non Premium per minute charges set forth in 17.1.1 following will apply to the respective premium and non-premium access minutes determined in this manner.

APPROVED FOR FILING - THE PUBLIC SERVICE COMMISSION OF SOUTH CAROLINA - JULY 15, 2014

3.6 Resold Services (Cont'd)

3.6.4 Rate Regulations Concerning the Resale of MTS and MTS-type Services (Cont'd)

(F) Access Groups - Non-Equal Access and Equal Access Offices (Cont'd)

The adjusted originating access minutes and the adjusted terminating access minutes will be apportioned between premium and non-premium access minutes using end-office specific usage data when available, or when usage data are not available, the premium and non-premium ratios developed as set forth in 6.4.1(C)(4) following. The Premium and Non Premium per minute charges set forth in 17.1.1 following will apply to the respective premium and non-premium access minutes determined in this manner.

(G) When the Adjustment Will Be Applied to Customer Bills

The adjustment as set forth in (D), (E) and (F) preceding will be made to the involved customer account no later than either the next bill date, or the one subsequent to that, depending on when the usage report is obtained.

(H) Conversion of Billed Usage to Minutes

When the MTS and/or MTS-type usage is shown in hours, the number of hours shall be multiplied by 60 to develop the associated MTS and/or MTS-type minutes of use. If the MTS and/or MTS-type usage is shown in a unit that does not show hours or minutes, the Customer shall provide a factor to convert the shown units to minutes.

APPROVED FOR FILING - THE PUBLIC SERVICE COMMISSION OF SOUTH CAROLINA - JULY 15, 2014

3.6 Resold Services (Cont'd)

3.6.4 Rate Regulations Concerning the Resale of MTS and MTS-type Services (Cont'd)

(I) Percent Intrastate Use (PIU)

The adjustment as set forth in (D), (E) and (F) preceding will be made to the involved customer account after making the adjustments to the Customer account as set forth in 3.8.4 following (PIU).

APPROVED FOR FILING - THE PUBLIC SERVICE COMMISSION OF SOUTH CAROLINA - JULY 15, 2014

Carrier Common Line Access Service

3.7 Reserved for Future Use

APPROVED FOR FILING - THE PUBLIC SERVICE COMMISSION OF SOUTH CAROLINA - JULY 15, 2014

Carrier Common Line Access Service

3.8 Rate Regulations

3.8.1 Billing of Charges

Carrier Common Line charges will be billed to each Switched Access Service provided under this tariff in accordance with the regulations as set forth in 3.8.5 following (Determination of Premium and Non-Premium Charges) except as set forth in 3.6.4 preceding (Resale) and 3.8.4 following (PIU).

3.8.2 Measuring and Recording of Call Detail

When access minutes are used to determine Carrier Common Line charges, they will be accumulated using call detail recorded by Telephone Company equipment except as set forth in 3.8.3 following (Unmeasured FGA and FGB Usage) and Feature Group C operator and automated operator services systems call detail such as pay telephone sent-paid, operator-DDD, operator-person, collect, credit-card, third number and/or other like calls recorded by the Customer. The Telephone Company measuring and recording equipment, except as set forth in 3.8.3 following (Unmeasured FGA and FGB Usage), will be associated with end office or local tandem switching equipment and will record each originating and terminating access minute where answer supervision is received. The accumulated access minutes will be summed on a line by line basis, by line group or by end office, whichever type of account is used by the Telephone Company, for each customer and then rounded to the nearest minute.

APPROVED FOR FILING - THE PUBLIC SERVICE COMMISSION OF SOUTH CAROLINA - JULY 15, 2014

Carrier Common Line Access Service

3.8 Rate Regulations (Cont'd)

3.8.3 Unmeasured Feature Group A and B Usage

When Carrier Common Line Access is provided in association with Feature Group A or Feature Group B Switched Access Service in Telephone Company offices that are not equipped for measurement capabilities, an assumed average Intrastate access minutes will be used to determine Carrier Common Line Access charges. These assumed access minutes are as set forth in the exchange carriers' access tariffs.

3.8.4 Percent Intrastate Use (PIU)

When the Customer reports Interstate and intrastate use of in-service Switched Access Service, Carrier Common Line charges will be billed only to Intrastate Switched Access Service access minutes based on the data reported by the Customer as set forth in 2.3.11 preceding (Jurisdictional Reports), except where the Telephone Company is billing according to actuals by jurisdiction. Intrastate Switched Access Service access minutes will, after adjustment as set forth in 3.6.4 preceding (Resale), when necessary, be used to determine Carrier Common Line Charges as set forth in 3.8.5 following.

APPROVED FOR FILING - THE PUBLIC SERVICE COMMISSION OF SOUTH CAROLINA - JULY 15, 2014

Carrier Common Line Access Service

3.8 Rate Regulations (Cont'd)

3.8.5 Determination of Premium and Non-Premium Charges

After the adjustments as set forth in 3.6.4 and 3.8.4 preceding have been applied, when necessary, to Switched Access Service access minutes, charges for the involved customer account will be determined as follows:

(A) Access Minutes for all premium rated Switched Access Service subject to Carrier Common Line charges will be multiplied by the Premium Access per minute rate as set forth in 17.1.1 following.

(B) Access minutes for all non-premium rated Switched Access Service subject to Carrier Common Line charges will be multiplied by the Non-Premium Access per minute rate as set forth in 17.1.1 following.

(C) Carrier Common Line charges shall not be reduced as set forth in 3.6.1 preceding unless Switched Access Charges, as set forth in Section 6. following, are applied to the Customer's Switched Access Services.

APPROVED FOR FILING - THE PUBLIC SERVICE COMMISSION OF SOUTH CAROLINA - JULY 15, 2014

Carrier Common Line Access Service

3.8 Rate Regulations (Cont'd)

3.8.5 Determination of Premium and Non-Premium Charges (Cont'd)

(D) Terminating Premium Access or Non-Premium Access, per minute charge(s) apply to:

- all terminating access minutes of use;

  -- less those terminating access minutes of use associated with Mobile Telephone Switching Offices (MTSOs).

- all originating access minutes of use associated with FGA Access Services where the off-hook supervisory signaling is forwarded by the Customer's equipment when the called party answers;

- all originating access minutes of use associated with calls placed to 500, 700, 800, 888, and 900 numbers

  -- less those originating access minutes of use associated with calls placed to 500, 700, 800, 888, and 900 numbers that terminate on a Switched Access Service that is assessed terminating Carrier Common Line charges.

  This usage is determined using information supplied by the Customer. The Customer's report to the Telephone Company shall include either the number of calls or minutes placed to 500, 700, 800, 888, and 900 numbers that terminate on a Switched Access Service that is assessed terminating Carrier Common Line charges. The Customer shall update this information at least semi-annually.

APPROVED FOR FILING - THE PUBLIC SERVICE COMMISSION OF SOUTH CAROLINA - JULY 15, 2014

Carrier Common Line Access Service

3.8 Rate Regulations (Cont'd)

3.8.5 Determination of Premium and Non-Premium Charges (Cont'd)

(D) (Cont'd)

When the Customer makes this report available to the Telephone Company in advance of billing, these minutes of use will be charged on the current bill as originating minutes of use as set forth in (E) following. If a billing dispute arises concerning the Customer provided report, the Telephone Company will request the Customer to provide the data the Customer used to develop the report. The Telephone Company will not request such data more than once a year. The Customer shall supply the data within 30 days of the Telephone Company request.

When this report is not available to the Telephone Company until after billing, it shall be used by the Telephone Company to calculate and post a credit to the Customer's account. The credit shall be posted to the Customer's account within 30 days of the receipt of the report. The credit shall be calculated by multiplying the number of access minutes of use, for which a credit is determined to be applicable, times the difference between the terminating and originating Carrier Common Line charges in effect when the calls were completed.

APPROVED FOR FILING - THE PUBLIC SERVICE COMMISSION OF SOUTH CAROLINA - JULY 15, 2014

Carrier Common Line Access Service

3.8 Rate Regulations (Cont'd)

3.8.5 Determination of Premium and Non-Premium Charges (Cont'd)

(E) The originating Premium Access or Non-Premium Access, per minute charge(s) apply to:

- all originating access minutes of use;

-- less those originating access minutes of use associated with FGA Access Services where the off-hook supervisory signaling is forwarded by the Customer's equipment when the called party answers;

-- less those originating access minutes of use associated with Mobile Telephone Switching Offices (MTSOs).

-- less those originating minutes of use associated with calls placed to 500, 700, 800, 888, and 900 numbers;

-- plus all originating access minutes of use associated with calls placed to 500, 700, 800, 888, and 900 numbers for which the Customer furnishes for each month a report of either the number of calls or minutes or a report of the percent of calls or minutes that terminate in a Switched Access Service that is assessed Carrier Common Line charges, and for which a corresponding reduction in the number of terminating access minutes of use has been made as set forth in (D) preceding.

APPROVED FOR FILING - THE PUBLIC SERVICE COMMISSION OF SOUTH CAROLINA - JULY 15, 2014

Reserved For Future Use

CONTENTS

Page No.

APPROVED FOR FILING - THE PUBLIC SERVICE COMMISSION OF SOUTH CAROLINA - JULY 15, 2014

Reserved For Future Use

APPROVED FOR FILING - THE PUBLIC SERVICE COMMISSION OF SOUTH CAROLINA - JULY 15, 2014

Access Ordering

CONTENTS

			Page No
5.1	General		1
	5.1.1	Service Installation	2
	5.1.2	Expedited Orders	3
	5.1.3	Selection of Facilities for Access Orders	4
5.2	Ordering Requirements		5
	5.2.1	Switched Access Service	5
	5.2.2	Special Access Service	12
	5.2.3	WATS or WATS-type Service	14
	5.2.4	Mixed Use Facilities - Switched and Special Access	14
	5.2.5	Miscellaneous Services	15
5.3	Access Orders for Services Provided by More Than One Telephone Company		16
	5.3.1	Non Meet Point Billing Ordering	16
	5.3.2	Meet Point Billing Ordering	17
5.4	Charges Associated with Access Ordering		19
	5.4.1	Access Order Charge	19
	5.4.2	Miscellaneous Service Order Charge	21
	5.4.3	Access Order Change Charges	22
5.5	Minimum Periods and Cancellations		25
	5.5.1	Minimum Periods	25
	5.5.2	Development of Minimum Period Charges	25
	5.5.3	Cancellation of an Access Order	26
	5.5.4	Partial Cancellation Charge	28

APPROVED FOR FILING - THE PUBLIC SERVICE COMMISSION OF SOUTH CAROLINA - JULY 15, 2014

Access Ordering

5.1 General

This section sets forth the regulations and order related charges for services set forth in other sections of this tariff. Order related charges are in addition to other applicable charges for the services provided.

An Access Order is an order to provide the customer with Switched and Special Access or Access Related Service or to provide changes to existing services.

The regulations, rates and charges for special construction are set forth in NATIONAL EXCHANGE CARRIER ASSOCIATION, INC. TARIFF F.C.C. NO. 3 and are in addition to the regulations, rates and charges specified in this section.

A customer may order any number of services of the same type and between the same premises on a single Access Order. All details for services for a particular order must be identical except for those for multipoint service.

The customer shall provide to the Telephone Company the order information required in 5.2 following, and in addition the customer must also provide:

- Customer name and premises address(es).
- Billing name and address (when different from customer name and address).
- Customer contact name(s) and telephone number(s) for the following provisioning activities: order negotiation, order confirmation, interactive design, installation and billing.

APPROVED FOR FILING - THE PUBLIC SERVICE COMMISSION OF SOUTH CAROLINA - JULY 15, 2014

Access Ordering

5.1 General (Cont'd)

5.1.1 Service Installation

The Telephone Company will provide the Access Service in accordance with the Customer's requested service date, subject to the constraints established by the Telephone Company schedule of applicable service dates.

The Telephone Company shall make available to all customers, upon request, a schedule of applicable service intervals for Switched and Special Access Services. The schedule shall specify the applicable service interval for services and the quantities of services that can be provided by a requested service date. Any associated material will be provided upon request and within a reasonable period of time.

The Telephone Company will not accept orders for service dates which exceed the applicable service date by more than six months.

Access Services will be installed during Telephone Company business days. If a customer requests that installation be done outside of scheduled work hours, and the Telephone Company agrees to this request, the customer will be subject to applicable Additional Labor Charges as set forth in 17.4.3(A) following.

When the Telephone Company has identified in NECA Tariff F.C.C. No. 4, Wire Center Information that it has not received a bona fide request for Direct Trunked Transport and a customer subsequently orders Direct Trunked Transport, the Telephone Company will work cooperatively with the customer to provide Direct Trunked Transport within 90 days of receipt of an order.

APPROVED FOR FILING - THE PUBLIC SERVICE COMMISSION OF SOUTH CAROLINA - JULY 15, 2014

Access Ordering

5.1 General (Cont'd)

5.1.2 Expedited Orders

When placing an Access Order, a customer may request a service date that is prior to the applicable service date. Additionally, a customer may also request an earlier service date on a pending Access Order. In this case, an Access Order modification as set forth in 5.4 following would be required. If the Telephone Company determines that the service can be provided on the requested date and that additional labor cost or extraordinary costs are required to meet the requested service date, the customer will be notified and will be provided with an estimate of the additional charges involved. Charges will be billed at actual cost, not to exceed 10 percent over estimated charges. Such additional charges will be determined and billed to the customer as explained following.

To calculate the additional labor charges, the Telephone Company will, upon authorization from the customer to incur the additional labor charges, keep track of the additional labor hours used to meet the request of the customer and will bill the customer at the applicable Additional Labor charges as set forth in 17.4.3(A) following.

To develop, determine and bill the customer the extraordinary costs which may be involved, the Special Construction terms and conditions as set forth in NATIONAL EXCHANGE CARRIER ASSOCIATION, INC. TARIFF F.C.C. NO. 3 will be used by the Telephone Company. Authorization to incur the costs and to bill the customer will be in accordance with the terms and conditions of NATIONAL EXCHANGE CARRIER ASSOCIATION, INC. TARIFF F.C.C. NO. 3.

When the request for expediting occurs subsequent to the issuance of the Access Order, a Service Date Change Charge as set forth in 17.4.1(B) following also applies.

APPROVED FOR FILING - THE PUBLIC SERVICE COMMISSION OF SOUTH CAROLINA - JULY 15, 2014

Access Ordering

5.1 General (Cont'd)

5.1.3 Selection of Facilities for Access Orders

The option to request a specific transmission path or channel is only provided for High Capacity Facilities Special Access, or as provided for under Special Facilities Routing as set forth in Section 11. following.

When there are High Capacity facilities to a hub on order or in service for the customer's use, the customer may request a specific channel or transmission path be used to provide the Switched or Special Access Service requested in an Access Order. The Telephone Company will make a reasonable effort to accommodate the customer request.

APPROVED FOR FILING - THE PUBLIC SERVICE COMMISSION OF SOUTH CAROLINA - JULY 15, 2014

Access Ordering

5.2 Ordering Requirements

5.2.1 Switched Access Service

When ordering Switched Access service, the customer must specify whether the service is to be provided as (1) Direct Trunked Transport to the end office, (2) Direct Trunked Transport to a tandem which connects with Tandem Switched Transport from the tandem to the end office or (3) Tandem Switched Transport to the end office. When all or a portion of service is ordered as Direct Trunked Transport, the customer must specify the type and quantity of Direct Trunked Transport facility (e.g., Voice Grade or High Capacity DS1 or DS3).

The Customer must also specify the type of Entrance Facility to be used for Switched Access (e.g., Voice grade or High Capacity). For High Capacity Entrance Facilities, the customer must specify the facility assignment and the channel assignment for each trunk.

Direct Trunked Transport is available at all tandems and at all end offices except those end offices identified in NATIONAL EXCHANGE CARRIER ASSOCIATION, INC. TARIFF F.C.C. NO. 4 as not having the capability to provide Direct Trunked Transport. Direct Trunked Transport is not available: (1) from end offices that provide equal access through a Centralized Equal Access arrangement, or (2) from end offices that lack recording or measurement capability.

Normally, Direct Trunked Transport of originating 800/888 calls from an end office is available only from Service Switching Point (SSP) equipped end offices. However, certain non-SSP equipped end offices can accommodate direct trunking of originating 800/888 calls. These end offices are also identified in NATIONAL EXCHANGE CARRIER ASSOCIATION, INC., TARIFF F.C.C. NO. 4.

When the customer has both Tandem Switched Transport and Direct Trunked Transport at the same end office, the customer will be provided Alternate Traffic Routing as set forth in 6.4.6 following.

A customer's Local Transport may be connected to the Entrance Facility of another customer, provided the other customer submits a Letter of Authorization for this connection and assumes full responsibility for the cost of the Entrance Facility.

APPROVED FOR FILING - THE PUBLIC SERVICE COMMISSION OF SOUTH CAROLINA - JULY 15, 2014

Access Ordering

5.2 Ordering Requirements

5.2.1 Switched Access Service (Cont'd)

(A) Feature Group A

Orders for Feature Group A Switched Access Service shall be in lines.

When placing an order for Feature Group A Switched Access Service, the customer shall provide the following information in addition to that set forth in 5.1 preceding:

- The number of lines and the first point of switching (i.e., Dial Tone Office)
- Optional Features
- Whether the Off-hook Supervisory Signaling is provided by the customer's equipment before the called party answers, or is forwarded by the customer's equipment when the called party answers
- Lines to be provided as single lines
- Lines to be arranged in multiline hunt group arrangements
- Directionality (1-way, 2-way, etc.)
- A projected Percentage of Intrastate Use as set forth in 2.3.11 preceding
- The Interexchange Carrier to which the service is connected or, in the alternative, specify the means by which the FGA access communications are transported to another LATA.
- Written authorization to provide access service in South Carolina per the South Carolina Public Service Commission

APPROVED FOR FILING - THE PUBLIC SERVICE COMMISSION OF SOUTH CAROLINA - JULY 15, 2014

Access Ordering

5.2 Ordering Requirements (Cont'd)

5.2.1 Switched Access Service (Cont'd)

(B) Feature Group B

Orders for Feature Group B Switched Access Service shall be in trunks.

When placing an order for Feature Group B Service, the customer shall provide, the following information in addition to that set forth in 5.1 preceding:

- The number of trunks
- The end office, except when FGB is provided through a centralized equal access arrangement, when direct routing is desired
- The access tandem office when tandem routing is desired
- Optional Features
- Trunks to be provided as single trunks
- Trunks to be arranged in trunk group arrangements
- Directionality (1-way, 2-way, etc.)
- A projected percentage of intrastate use as set forth in 2.3.11 preceding
- The Interexchange Carrier to which the service is connected or, in the alternative, specify the means by which the FGB access communications are transported to another state.
- The access code dialing arrangement (i.e., a uniform access code of 950-XXXX or an Abbreviated Dialing Arrangement (ADA) access code of N or NX).
- For Feature Group B switched access service to a Wireless Switching Center (WSC) directly interconnected to a Telephone Company access tandem office, the customer shall provide information to the Telephone Company indicating the NXX code(s) to be accessed.

APPROVED FOR FILING - THE PUBLIC SERVICE COMMISSION OF SOUTH CAROLINA - JULY 15, 2014

Access Ordering

5.2 Ordering Requirements (Cont'd)

5.2.1 Switched Access Service (Cont'd)

(C) Feature Group C, Feature Group D and Interim NXX Translation and Operator Transfer Service and SS7 Signaling

When placing an order for Feature Group C and D Switched Access Service, the customer shall provide:

- the number of BHMC from the customer designated premises to the end office or Operator Transfer Service Location by Feature Group and by type of BHMC, or
- The number of trunks desired between customer designated premises and an entry switch, or Operator Transfer Service location.
- The number of BHMC or trunks required for or to be converted to an SS7 Signaling capability.
- Optional Features
- Interim NXX Translation options.
- Operator Transfer Service Option
- A projected Percentage of Intrastate Use as set forth in 2.3.11 preceding.
- For Feature Group D switched access service to a Wireless Switching Center (WSC) directly interconnected to a Telephone Company access tandem office, the customer shall provide information to the Telephone Company indicating the NXX code(s) to be accessed.

When BHMC information is provided it is used to determine the number of transmission paths as set forth in 6.2.5 following.

The BHMC may be determined by the customer in the following manner. For each day (8 am to 11 pm, Monday through Friday, excluding national holidays), the customer shall determine the highest number of minutes of use for a single hour (e.g., 55 minutes in the 10-11 a.m., hour). The customer shall, for the same hour period (i.e., busy hour) for each of twenty consecutive business days, pick the twenty consecutive business days in a calendar year which add up to the largest number of minutes of use. Both originating and terminating minutes shall be included. The customer shall then determine the average busy hour minutes of capacity (i.e., BHMC) by dividing the largest number of minutes of

APPROVED FOR FILING - THE PUBLIC SERVICE COMMISSION OF SOUTH CAROLINA - JULY 15, 2014

Access Ordering

5.2 Ordering Requirements (Cont'd)

5.2.1 Switched Access Service (Cont'd)

(C) Feature Group C, Feature Group D and Interim NXX Translation and Operator Transfer Service and SS7 Signaling (Cont'd)

use figure for the same hour period for the consecutive twenty business day period by 20. This computation shall be performed for each end office the customer wishes to serve. These determinations thus establish the forecasted BHMC for each end office.

Customers may, at their option, order FGD by specifying the number of trunks desired between customer designated premises and an end office, access tandem, or operator services location. When ordering by trunk quantities rather than BHMC quantities to an access tandem, the customer must also provide the Telephone Company an estimate of the amount of traffic it will generate to and/or from each end office subtending the access tandem to assist the Telephone Company in its own efforts to project further facility requirements.

When Feature Group C or D is ordered with the Interim NXX Translation optional feature, the customer shall specify the Service Access Code(s) (e.g., 900) and their associated NXX code(s) to be translated within the entire LATA or Market Area. The initial and subsequent orders to add, change, or delete Interim NXX Translation codes shall be placed separately or in combination with orders to change Feature Group C or D Switched Access BHMC or trunks. Customer assigned NXX codes which have not been ordered will be blocked.

Orders for the Interim NXX Translation optional feature shall not be required until such time as a customer other than an MTS/WATS provider requests Interim NXX Translation of Service Access Codes. Upon receipt of such order, the Telephone Company shall notify the MTS/WATS provider of the activation of the Interim NXX Translation Service for the Service Access Code. Following such initial activation, all customers are required to place orders for Interim NXX Translation of the Service Access Code and the Interim NXX Translation charge for the Service Access Code shall apply as set forth in 17.2.1(C) following.

APPROVED FOR FILING - THE PUBLIC SERVICE COMMISSION OF SOUTH CAROLINA - JULY 15, 2014

Access Ordering

5.2 Ordering Requirements (Cont'd)

5.2.1 Switched Access Service (Cont'd)

(C) Feature Group C, Feature Group D, Interim NXX Translation Operator Transfer Service and SS7 Signaling (Cont'd)

For the Operator Transfer Service Option ordered in conjunction with Feature Group C or Feature Group D Switched Access Service as set forth in 6.7.1 and 6.8.1 following, the customer must specify the number of trunks or BHMCs desired between its premises and the Telephone Company operator services location.

Operator Transfer Service is provided at operator services locations as set forth in National Exchange Carrier Association, Inc. Tariff F.C.C. No. 4.

(D) Directory Assistance

Orders for Directory Assistance service shall be in BHMCs.

When placing an order for Directory Assistance service, the customer shall provide the following information:

- The number of BHMCs from the customer designated premises to the Directory Assistance location
- If Switched Access is required on the terminating end of the DA call, as set forth in Section 9. following, the Feature Group B, C or D Switched Access Service Trunk Group to be associated with the DA service.
- Directory Transport options.

The BHMC information is used to determine the number of transmission paths as set forth in 9.2.6 following.

(E) SS7 Optional Feature

When Feature Group C or D is ordered with the SS7 optional feature, in addition to information listed in 5.2.1(C) preceding, the customer shall specify a reference to existing signaling connections or reference a related SS7 signaling connection order. When ordering SS7 signaling, the customer shall provide the Signaling Transfer Point codes, location identifier codes and circuit identifier codes. In addition, the customer shall work cooperatively with the Telephone Company to determine the number of SS7 signaling connections required to handle its signaling traffic.

APPROVED FOR FILING - THE PUBLIC SERVICE COMMISSION OF SOUTH CAROLINA - JULY 15, 2014

Access Ordering

5.2 Ordering Requirements (Cont'd)

5.2.1 Switched Access Service (Cont'd)

(E) SS7 Optional Feature (Cont'd)

For 800/888 Data Base Access Service, as described in 6.1.3(A) & (C) following, the customer must order FGC or FGD to those access tandems or end offices designated as Service Switching Points (SSP) for 800/888 Data base service or to those non-SSP equipped end offices that can accommodate direct trunking of originating 800/888 calls. SSP equipped end offices that can accommodate direct trunking of originating 800/888 calls are designated in NATIONAL EXCHANGE CARRIER ASSOCIATION, INC. TARIFF FCC NO. 4, WIRE CENTER INFORMATION. All traffic originating from end offices not equipped to provide SS7 signaling and routing or not able to accommodate direct trunking of originating 800/888 calls require routing via an access tandem where SSP functionality is available.

(F) For the Flexible Automatic Number Identification (Flex ANI) optional feature the customer shall place one order for each Carrier Identification Code (CIC) per end office, for all end offices equipped to provide Flex ANI. See section 6.10.3 for a description of Flex ANI and service availability.

APPROVED FOR FILING - THE PUBLIC SERVICE COMMISSION OF SOUTH CAROLINA - JULY 15, 2014

Access Ordering

5.2 Ordering Requirements (Cont'd)

5.2.2 Special Access Service

When placing an order for Special Access Service the customer must specify:

- the customer designated premises or hubs involved
- type of service (e.g., Voice Grade, High Capacity, etc.)
- the channel interface(s)
- technical specification package
- options desired
- for multipoint services, the channel interface at each customer designated premises may, at the request of the customer, be different but all such interfaces shall be compatible.
- that the traffic consists of less than ten percent interstate traffic.

All part-time Video and Program Audio services are subject to a service inquiry. A service inquiry is a request to the Telephone Company to determine if facilities exist to provide the service ordered and to determine the service date on which service can be provided to the customer.

Where the Special Access Service is exempt from the Special Access Surcharge, as set forth in 7.3 following the customer shall furnish written certification to that effect as set forth in 7.3.3 following.

When ordering bridging and/or multiplexing, the Customer must specify the telephone company hub(s) from which they desire service. The Customer must specify only those hubs that provide the type of service ordered and interconnect with the wire center(s) from which the customer requires service. The Wire Center section of National Exchange Carrier Association, Inc. Tariff F.C.C. No. 4 identifies hub types (e.g., Digital Data, High Capacity Multiplexing, etc.) and hub levels (i.e., Hub, Terminus Hub, Intermediate Hub and Super-Intermediate Hub). Additionally, the Subtending section of Tariff F.C.C. No. 4 identifies wire centers and the Intermediate and/or Super-Intermediate Hubs with which they interconnect.

APPROVED FOR FILING - THE PUBLIC SERVICE COMMISSION OF SOUTH CAROLINA - JULY 15, 2014

Access Ordering

5.2 Ordering Requirements (Cont'd)

5.2.2 Special Access Service (Cont'd)

When ordering High Capacity Optional Rate plans or upgrades to the plans, discontinuance charges, as specified in 7.2.8 following, will not apply if the conditions set forth in 7.2.8 following are met and the customer provides the following ordering information:

The High Capacity Optional Rate Plans are only available from those Telephone Companies listed in 17.3.10 following.

Term Discounts-Upgrades in Capacity (DS1 to DS3)

- The customer's order for the disconnect of the existing DS1 Service and the installation of the new DS3 Service are received at the same time and specifically reference the application of upgrade in capacity.

- The customer's disconnect order for the existing DS1 Service must reference the DS3 Service installation order.

Customer orders to install and disconnect DS1 or DS3 services provided under a Term Discount plan where the number of DS1s or DS3s remains constant and the customer wishes to maintain the existing Term Discount period and minimum service period must:

- Be received at the same time.

- Reference continuation of the existing Term Discount period and the minimum service period on both the installation and disconnect orders.

DS3 Capacity Discounts - Upgrades

- The customer's order for the disconnect of the current DS3 Capacity Interface and order for the installation of the upgraded DS3 Capacity Interface are received by the telephone company at the same time and specifically reference the application of upgrade in capacity.

  The customer's disconnect order for the existing DS3 Service must reference the installation order.

APPROVED FOR FILING - THE PUBLIC SERVICE COMMISSION OF SOUTH CAROLINA - JULY 15, 2014

Access Ordering

5.2 Ordering Requirements (Cont'd)

5.2.3 WATS or WATS-Type Services

Special Access Service may be ordered for connection with FGA, FGB, FGC or FGD Switched Access Service at Telephone Company designated WATS Serving Offices (WSOs) for the provision of WATS or WATS-type Services and may be ordered separately by a customer other than the customer which orders the FGA, FGB, FGC or FGD Switched Access Service. For the Special Access Service the customer shall specify:

- the customer designated premises at which the Special Access service terminates
- the type of line (i.e., two-wire or four-wire)
- the type of calling (i.e., originating, terminating or two-way)
- type of Supervisory Signaling.

When the optional screening, switching and/or recording functions are not provided at the customer serving wire center, Channel Mileage, as set forth in 7.2.1 following, must be ordered between that wire center and the nearest WSO where the screening, switching and/or recording functions can be provided.

5.2.4 Mixed Use Facilities - Switched and Special Access

Mixed use is the provision of both Switched and Special Access Services over the same High Capacity facilities. Mixed use facilities to a hub will be ordered and provided as Special Access Service. Where mixed use is employed, individual services utilizing these facilities must be ordered either as Switched Access Service or Special Access Service as further elaborated and set forth in 6.4.7 and 7.2.7 following. When placing the order for the individual service(s), the customer must specify a channel assignment for each service ordered.

APPROVED FOR FILING - THE PUBLIC SERVICE COMMISSION OF SOUTH CAROLINA - JULY 15, 2014

Access Ordering

5.2 Ordering Requirements (Cont'd)

5.2.5 Miscellaneous Services

Testing Service, Additional Labor, Telecommunications Service Priority and Special Facilities Routing shall be ordered with an Access Order may subsequently be added to a pending order at any time up to and including the service date for the access service. When miscellaneous services are added to a pending order a service date change may be required. When a service date change is required, the service date change charge as set forth in 17.4.1(A) following will apply. When miscellaneous services are added to a pending order, charges for a design change as set forth in 17.4.1(C) following will apply when an engineering review is required. If both a service date change and an engineering review are required, both the Service Date Change Charge and the Design Change Charge will apply as set forth in 5.4.3(B) following.

The rates and charges for these services, as set forth in Section 17 of this tariff, will apply in addition to the ordering charges set forth in Section 17 and the rates and charges for the Access Service with which they are associated.

Additional Engineering is not an ordering option, but will be applied to an Access Order when the Telephone Company determines that Additional Engineering is necessary to accommodate a customer request. Additional Engineering will only be required as set forth in 13.1 following. When it is required, the customer will be so notified and will be furnished with a written statement setting forth the justification for the Additional Engineering as well as an estimate of the charges. If the customer agrees to the Additional Engineering, a firm order will be established. If the customer does not want the service or facilities after being notified that Additional Engineering of Telephone Company facilities is required, the order will be withdrawn and no charges will apply. Once a firm order has been established, the total charge to the customer for the Additional Engineering may not exceed the estimated amount by more than 10%.

APPROVED FOR FILING - THE PUBLIC SERVICE COMMISSION OF SOUTH CAROLINA - JULY 15, 2014

Access Ordering

5.3 Access Orders For Services Provided By More Than One Telephone Company

Access Services provided by more than one Telephone Company are services where one end of the Local Transport, Directory Transport or Channel Mileage element is in the operating territory of one Telephone Company and the other end of the element is in the operating territory of a different Telephone Company or where the Interim NXX Translation Service and the end office are not provided by the same Telephone Company.

The ordering procedure for this service is dependent upon the billing arrangement, as set forth in 2.4.7 preceding, to be used by the Telephone Companies involved in providing the Access Service. The Telephone Company will notify the customer which of the ordering procedures will apply.

5.3.1 Non Meet Point Billing Ordering - FGA

(A) Single Company Billing Ordering

The Telephone Company receiving the order from the customer will arrange to provide the service and bill the customer as set forth in 2.4.7(A)(1). The customer will place the order with the Telephone Company as follows:

For FGA Switched Access Services the customer will place the order with the Telephone Company in whose territory the first point of switching is located. The first point of switching is the dial tone office.

When the first point of switching is not in the same Telephone Company's territory as the Interexchange Carrier premises, the customer must supply a copy of the order to the Telephone Company in whose territory the Interexchange Carrier premises is located and any other Telephone Company(s) involved in providing the service. When service is provided through a centralized equal access provider, the customer must supply a copy of the order to that provider.

APPROVED FOR FILING - THE PUBLIC SERVICE COMMISSION OF SOUTH CAROLINA - JULY 15, 2014

Access Ordering

5.3 Access Orders For Services Provided By More Than One Telephone Company (Cont'd)

5.3.2 Meet Point Billing Ordering

Each Telephone Company will provide its portion of the Access Service within its operating territory to an interconnection point(s) with the other Telephone Company(s). Billing Percentages will be determined by the Telephone Companies involved in providing the Access Service and listed in NATIONAL EXCHANGE CARRIER ASSOCIATION, INC. TARIFF F.C.C. NO. 4. Each Telephone Company will bill the customer for its portion of the service as set forth in 2.4.7. All other appropriate charges in each Telephone Company tariff are applicable.

For the service(s) ordered as set forth following, the customer must also supply a copy of the order to the Telephone Company in whose operating territory a customer designated premises is located and any other Telephone Company(s) involved in providing the service. Additionally, when service is provided through a centralized equal access provider, the customer must supply a copy of the order to that provider.

(A) For Feature Group A and B Switched Access Services, the customer must place an order with the Telephone Company in whose territory the first point of switching is located, (i.e., FGA - dial tone office, FGB - access tandem or end office). The Telephone Company will designate the first point(s) of switching for FGB Services where the Telephone Company elects to provide equal access through a centralized equal access arrangement. Those Telephone Company offices providing equal access through centralized arrangements are identified in NATIONAL EXCHANGE CARRIER ASSOCIATION, INC. TARIFF F.C.C. No. 4.

(B) For Feature Group C and D Switched Access Services, the customer must place an order with the Telephone Company in whose territory the end office is located. Customers may, at their option, order FGD to the access tandem. When ordered to the access tandem, and the access tandem and the end office are not in the same Telephone Company operating territory, the customer must also supply a copy of the order to each additional Telephone Company subtending the access tandem.

APPROVED FOR FILING - THE PUBLIC SERVICE COMMISSION OF SOUTH CAROLINA - JULY 15, 2014

Access Ordering

5.3 Access Orders For Services Provided By More Than One Telephone Company (Cont'd)

5.3.2 Meet Point Billing Ordering (Cont'd)

(C) Customers ordering Special Access Service to be interconnected with Switched Access Services at Telephone Company designated WATS Serving Offices for the provision of WATS or WATS-type Services must place an order with each Telephone Company in whose territory the end office and the WATS Serving Office are located, if they are not collocated.

(D) Except for Special Access Service as set forth in (C) above or as set forth in (E) below, the customer may place the order for a Special Access Service with either Exchange Telephone Company.

(E) For Special Access Service involving a hub(s) the customer must place the order with the Telephone Company in whose territory the hub(s) is located.

(F) For Directory Assistance Service, the customer must place an order with the Telephone Company in whose territory the Directory Assistance Location is located.

(G) For initiation, additions, changes or deletions to the Interim NXX translation code(s), the customer must place an order with the Telephone Company who provides the Interim NXX Translation. The customer must also provide a copy of the order to the Telephone Companies subtending the Interim NXX Translation office.

APPROVED FOR FILING - THE PUBLIC SERVICE COMMISSION OF SOUTH CAROLINA - JULY 15, 2014

Access Ordering

5.4 Charges Associated with Access Ordering

5.4.1 Access Order Charge

The Access Order Charge is applied to all customer requests for new Special and Switched Access Service and Directory Assistance Service. In addition, the Access Order Charge is applicable to customer requests for additions, changes or rearrangements to existing Special and Switched Access Service and Directory Assistance Service with the following exceptions:

The Access Order Charge does not apply:

- When a Service Date Change Charge is applicable.
- When a Design Change Charge is applicable.
- To administrative changes as set forth in 6.4.1(B)(3) and 7.2.2(C)(3) following.
- When a change to a pending order does not result in the cancellation of the pending order and the issuance of a new order.
- When Interim NXX Translation charge is applicable.
- When a Miscellaneous Service Order Charge is applicable.
- When a Presubscription Charge is applicable.
- When a Telephone Company initiated network reconfiguration requires a customer's existing access service to be reconfigured.
- When a service with an ICB rate is converted to a similar service with an non-ICB tariff rate prior to the expiration of the ICB.
- When a Billing Name and Address charge is applicable.
- When a 900 Blocking Service charge is applicable.
- When Payphone Service Providers (PSPs) obtain Coin Supervision Additive Service in conjunction with local exchange service lines for the provision of pay telephone service.

APPROVED FOR FILING - THE PUBLIC SERVICE COMMISSION OF SOUTH CAROLINA - JULY 15, 2014

Access Ordering

5.4 Charges Associated with Access Ordering (Cont'd)

5.4.1 Access Order Charge (Cont'd)

- When a customer requests a change of trunks from Tandem Switched Transport to Direct Trunked Transport or from Direct Trunked Transport to Tandem Switched Transport, or requests to rearrange Switched Access services between lower capacity and higher capacity facilities, (e.g., Voice Grade to/from DS1 or DS1 to/from DS3), providing:

  - the change is ordered anytime between October 1, 1994, and December 31, 1994 and the change is completed no later than March 31, 1995, and
  - the orders to disconnect existing trunks and to connect the new trunks are placed at the same time, and
  - the number of installed trunks does not exceed the number of trunks disconnected. If the number of installed trunks exceeds the number of trunks disconnected, the Access Order Charge will apply unless the customer provides justification based upon standard engineering methods to show that the additional capacity is required to maintain the same level of service.

The Access Order Charge will be applied on a per order basis to each order received by the Telephone Company or copy of an order received by the Telephone Company pursuant to 5.3.1(B), 5.3.2, 5.3.2(B) and 5.3.2(G) preceding, except by the Telephone Company applying the Interim NXX Translation charge, and is in addition to other applicable charges as set forth in this and other sections of this tariff.

The Access Order Charge will be applied on a per order basis for any change, rearrangement or addition to the delivery of signaling to an existing STP Port.

APPROVED FOR FILING - THE PUBLIC SERVICE COMMISSION OF SOUTH CAROLINA - JULY 15, 2014

Access Ordering

5.4 Charges Associated with Access Ordering (Cont'd)

5.4.2 Miscellaneous Service Order Charge

A Miscellaneous Service Order Charge, as set forth in 17.4.1(D) following, applies to any service, or combination of services, ordered simultaneously from Section 13. of the Tariff for which a service order is not already pending (with the exception of Presubscription (13.4), Billing Name and Address Service (13.9) and 900 Blocking Service (13.8) which does not have the charge applied). The Miscellaneous Service Order Charge is an administrative charge designed to compensate for the expenses associated with service order issuance.

The charge always applies to the following services since a pending service order would not exist:

- Overtime Repair (13.2.2),
- Standby Repair (13.2.3),
- Testing and Maintenance with Other Telephone Companies other than when in conjunction with Acceptance Testing (13.2.4),
- Other Labor (13.2.5),
- Maintenance of Service (13.3.2),
- Originating Line Screening (OLS) Service (13.11).

The Miscellaneous Service Order Charge will also apply to the following services if they are ordered subsequent to the initial installation of the associated access service, thereby necessitating the issuance of another service order:

- Telecommunications Service Priority (13.3.3),
- Controller Arrangement [13.3.4(A)].

APPROVED FOR FILING - THE PUBLIC SERVICE COMMISSION OF SOUTH CAROLINA - JULY 15, 2014

Access Ordering

5.4 Charges Associated with Access Ordering (Cont'd)

5.4.2 Miscellaneous Service Order Charge (Cont'd)

The charge does not apply to the following services since there would exist a pending service order:

- Additional Engineering (13.1),
- Overtime Installation (13.2.1),
- Standby Acceptance Testing (13.2.3),
- Testing and Maintenance with Other Telephone Companies when in conjunction with Acceptance Testing (13.2.4),
- Additional Cooperative Acceptance Testing [13.3.1(A)(1) and 13.3.1(B)(1)],
- Coin Supervision Additive Service (13.12).

5.4.3 Access Order Change Charges

Access Order changes involve service date changes and design changes. The customer may request a change of its Access Order prior to the service date. The Telephone Company will make every effort to accommodate a requested change when it is able to do so with the normal work force assigned to complete such an order within normal business hours. If the change cannot be made with the normal work force during normal business hours, the Telephone

APPROVED FOR FILING - THE PUBLIC SERVICE COMMISSION OF SOUTH CAROLINA - JULY 15, 2014

Access Ordering

5.4 Charges Associated with Access Ordering (Cont'd)

5.4.3 Access Order Change Charges (Cont'd)

Company will notify the customer. If the customer still desires the Access Order change, the Telephone Company will schedule a new service date as set forth in 5.1.2 preceding. All charges for Access Order change as set forth in 17.4.1(B) and (C) will apply on a per occurrence basis.

Any increase in the number of Special Access Service channels or Switched Access Service lines, trunks or busy hour minutes of capacity or CCS/SS7 Port Terminations will be treated as a new Access Order (for the increased amount only).

If order changes are necessary to satisfy the transmission performance for a Special Access Service ordered by a customer, these changes will be made without order change charges being incurred by the customer.

(A) Service Date Change

The customer may request a change of service date on a pending Access Order prior to the service date. A change of service date is a change of the scheduled service date by the customer to either an earlier date or a later date which does not exceed 30 calendar days from the original service date.

If the Telephone Company determines that the customer's request can be accommodated without delaying the service dates for orders of other customers, the service date will be changed and the Service Date Change Charge, as set forth in 17.4.1(B) following, will be applied to the order.

If the service date is changed to an earlier date, and the Telephone Company determines additional labor or extraordinary costs are necessary to meet the earlier service date requested by the customer, the customer will be notified by the Telephone Company that Expedited Order Charges as set forth in 5.1.2 preceding apply. Such charges will apply in addition to the Service Date Change Charge.

APPROVED FOR FILING - THE PUBLIC SERVICE COMMISSION OF SOUTH CAROLINA - JULY 15, 2014

Access Ordering

5.4 Charges Associated with Access Ordering (Cont'd)

5.4.3 Access Order Change Charges (Cont'd)

If the requested service date exceeds 30 calendar days following the original service date, and the Telephone Company determines that the customer's request can be accommodated, the Telephone Company will cancel the original order and apply the Cancellation Charges as set forth in 5.5.3 following. A new Access Order with a new service date will be issued. The Service Date Change Charge will not apply, however, the Access Order Charge will apply to the new order.

If the service date is changed due to a design change as set forth in (B) following, the Service Date Change Charge will apply.

(B) Design Change

The customer may request a design change to the service ordered prior to the requested service date. A design change is any change to an Access Order which requires engineering review. An engineering review is a review by Telephone Company personnel, of the service ordered and the requested changes to determine what changes in the design, if any, are necessary to meet the changes requested by the customer. Design changes include such things as the addition or deletion of optional features or functions or a change in the type of Transport Termination (Switched Access only), type of channel interface, type of Interface Group or technical specification package. Design changes do not include a change of customer designated premises, first point of switching, Feature Group type or Special Access Service channel type. Changes of this nature will require the issuance of a new order and the cancellation of the original order with appropriate cancellation charges applied.

The Telephone Company will review the requested change, notify the customer whether the change is a design change, if the change can be accommodated and if a new service date is required. If the customer authorizes the Telephone Company to proceed with the design change, a Design Change Charge as set forth in 17.4.1(C) following will apply in addition to the charge for Additional Engineering as set forth in 17.4.2 following. If a change of service date is required, the Service Date Change Charge as set forth in 17.4.1(B) following will also apply. The Access Order Charge as specified in 17.4.1 following does not apply.

APPROVED FOR FILING - THE PUBLIC SERVICE COMMISSION OF SOUTH CAROLINA - JULY 15, 2014

Access Ordering

5.5 Minimum Periods and Cancellations

5.5.1 Minimum Periods

The minimum period for part-time Video and Program Audio Special Access Services is one day even though the service will be provided only for the duration of the event specified on the order (e.g., one-half hour, two hours, five hours, etc.).

The minimum period for Switched Access High Capacity DS3 Entrance Facilities and Direct Trunked Transport is as set forth in 6.1.3 following. The minimum period for High Capacity DS1 and DS3 Special Access Services is as set forth in 7.2.8 following.

The minimum period for which Directory Assistance Service and the Directory Access Service is provided and for which charges apply is six months. A minimum period of six months applies for each additional period of service ordered or extended.

(D)

(D)

The minimum period for which all other Access Service is provided and for which charges are applicable is one month.

5.5.2 Development of Minimum Period Charges

When Access Service is disconnected after commencement of service but prior to the expiration of the minimum period, charges are applicable for the balance of the minimum period. A disconnect constitutes facilities being returned to available inventory.

The Minimum Period Charge for monthly billed services will be determined as follows:

(A) For Switched Access Service, the charge for a month or fraction thereof is equal to the applicable recurring charges plus any nonrecurring and/or special construction charge(s) that may be due.

(B) For Special Access Service and flat rated Switched Access Service, the charge for a month or fraction thereof is the applicable monthly rates for the appropriate channel type plus any optional features, nonrecurring and/or special construction charge(s) that may apply.

APPROVED FOR FILING - THE PUBLIC SERVICE COMMISSION OF SOUTH CAROLINA - JULY 15, 2014

Access Ordering

5.5 Minimum Periods and Cancellations (Cont'd)

5.5.2 Development of Minimum Period Charges (Cont'd)

The Minimum Period Charge for part-time Video and Program Audio Services is the applicable daily rate for the appropriate channel type as set forth in 7.2.4 following.

The Minimum Period Charge for Directory Access Service is developed as set forth in 9.4.4 following.

5.5.3 Cancellation of an Access Order

(A) A customer may cancel an Access Order for the installation of service on any date prior to the service date. The cancellation date is the date the Telephone Company receives written or verbal notice from the customer that the order is to be cancelled. The verbal notice must be followed by written confirmation within 10 days. If a customer or a customer's end user is unable to accept Access Service within 30 calendar days after the original service date, the customer has the choice of the following options:

- The Access Order shall be cancelled and charges set forth in (B) following will apply, or
- Billing for the service will commence.

In such instances, the cancellation date or the billing date, depending on which option is selected by the customer, shall be the 31st day beyond the original service date of the Access Order.

APPROVED FOR FILING - THE PUBLIC SERVICE COMMISSION OF SOUTH CAROLINA - JULY 15, 2014

Access Ordering

5.5 Minimum Periods and Cancellations (Cont'd)

5.5.3 Cancellation of an Access Order (Cont'd)

(B) When a customer cancels an Access Order for the installation of service, a Cancellation Charge will apply as follows:

(1) Installation of Switched or Special Access Service facilities is considered to have started when the Telephone Company incurs any cost in connection therewith or in preparation thereof which would not otherwise have been incurred.

(2) Where the customer cancels an Access Order prior to the start of installation of access facilities, no charges shall apply.

(3) Where installation of access facilities has been started prior to the cancellation, the charges specified in (a) or (b) following, whichever is lower, shall apply.

(a) A charge equal to the costs incurred in such installation, less estimated net salvage. Such costs include the nonrecoverable cost of equipment and material ordered, provided or used, plus the nonrecoverable cost of installation and removal including the costs of engineering, labor, supervision, transportation, rights-of-way and other associated costs.

(b) The minimum period charges for Switched or Special Access Service ordered by the customer, as set forth in 5.5.2 preceding.

(C) When a customer cancels an order for the discontinuance of service, no charges apply for the cancellation.

APPROVED FOR FILING - THE PUBLIC SERVICE COMMISSION OF SOUTH CAROLINA - JULY 15, 2014

Access Ordering

5.5 Minimum Periods and Cancellations (Cont'd)

5.5.3 Cancellation of an Access Order (Cont'd)

(D) If the Telephone Company misses a service date by more than 30 days and such delay is not requested or caused by the customer (excluding those circumstances where the date is missed due to acts of God, governmental requirements, work stoppages and civil commotions), the customer may cancel the Access Order without incurring cancellation charges.

5.5.4 Partial Cancellation Charge

Any decrease in the number of ordered Special Access Service channels or Switched Access Service lines, trunks or busy hour minutes of capacity or CCS/SS7 Port Terminations will be treated as a partial cancellation and charges will be determined as set forth in 5.5.3(B) preceding.

APPROVED FOR FILING - THE PUBLIC SERVICE COMMISSION OF SOUTH CAROLINA - JULY 15, 2014

Switched Access Services

CONTENTS

			Page No.
6.1	General		1
	6.1.1	Description and Provision of Switched Access Service Arrangements	2
	6.1.2	Ordering Options and Conditions	5
	6.1.3	Rate Categories	5
	6.1.4	Special Facilities Routing	28
	6.1.5	Design Layout Report	28
6.2	Undertaking of the Telephone Company		29
	6.2.1	Network Management	29
	6.2.2	Transmission Specifications	30
	6.2.3	Provision of Service Performance Data	31
	6.2.4	Testing	31
	6.2.5	Determination of Number of Transmission Paths	33
	6.2.6	Trunk Group Measurement Reports	34
6.3	Obligations of the Customer		35
	6.3.1	Report Requirements	35
	6.3.2	Trunk Group Measurement Reports	36
	6.3.3	Supervisory Signaling	36
	6.3.4	Short Duration Mass Calling Requirements	36
6.4	Rate Regulations		37
	6.4.1	Description and Application of Rates and Charges	37
	6.4.2	Minimum Monthly Charge	56
	6.4.3	Change of Switched Access Service Arrangements	57
	6.4.4	Moves	58
	6.4.5	Local Information Delivery Services	58
	6.4.6	Mileage Measurement	59
	6.4.7	Mixed Use	64
	6.4.8	Message Unit Credit for Feature Group A	64
	6.4.9	Application of Rates for Feature Group A Extension Service	65
6.5	Description and Provision of Feature Group A (FGA)		66
	6.5.1	Description	66
	6.5.2	Optional Features	70
	6.5.3	Optional Features Provided in Local Tariffs	72
	6.5.4	Measuring Access Minutes	72
	6.5.5	Testing Capabilities	76

APPROVED FOR FILING - THE PUBLIC SERVICE COMMISSION OF SOUTH CAROLINA - JULY 15, 2014

Switched Access Services

CONTENTS

Page No.

6.6 Description and Provision of Feature Group B (FGB) 77

6.6.1 Description 77
6.6.2 Optional Features 81
6.6.3 Design and Traffic Routing 83
6.6.4 Measuring Access Minutes 83
6.6.5 Testing Capabilities 88

6.7 Description and Provision of Feature Group C (FGC) 89
6.7.1 Description 89
6.7.2 Optional Features 94
6.7.3 Design and Traffic Routing 97
6.7.4 Measuring Access Minutes 98
6.7.5 Design Blocking Probability 102
6.7.6 Testing Capabilities 104

6.8 Description and Provision of Feature Group D (FGD) 105

6.8.1 Description 105
6.8.2 Optional Features 109
6.8.3 Design and Traffic Routing 111
6.8.4 Measuring Access Minutes 112
6.8.5 Design Blocking Probability 114
6.8.6 Network Blocking Charge 116
6.8.7 Testing Capabilities 117

6.9 Interim Access 118

6.9.1 Reserved for Future Use 118
6.9.2 Reserved for Future Use 118

6.10 Chargeable and Nonchargeable Optional Features 119

6.10.1 Common Switching Nonchargeable Optional Features 120
6.10.2 Transport Termination Nonchargeable Optional Features 137
6.10.3 Chargeable Optional Features 139

APPROVED FOR FILING - THE PUBLIC SERVICE COMMISSION OF SOUTH CAROLINA - JULY 15, 2014

Switched Access Service

6.1 General

Switched Access Service is available to all customers, who have obtained a Certificate of Convenience and Necessity from the South Carolina Public Service Commission, for their use in furnishing their services to end users. Switched Access Service provides a two-point communications path between a customer designated premises and an end user's premises. It provides for the use of common terminating, switching and trunking facilities, and for the use of common subscriber plant of the Telephone Company. Switched Access Service provides for the ability to originate calls from an end user's premises to a customer designated premises, and to terminate calls from a customer designated premises to an end user's premises in the LATA where it is provided. WATS access billing is considered to be Switched Access. Specific references to material describing the elements of Switched Access Service are provided in 6.1.3 and 6.5 through 6.9 following.

Rates and charges for Switched Access Service depend generally on the specific Feature Group ordered by the customer, e.g., for MTS or WATS services or MTS/WATS equivalent services, and whether it is provided in a Telephone Company end office that is equipped to provide equal or non-equal access. Rates and charges for Switched Access Service are set forth in 17.2 following. The application of rates for Switched Access Service is described in 6.4 following. Rates and charges for services other than Switched Access Service, e.g., a customer's interLATA toll message service, may also be applicable when Switched Access Service is used in conjunction with these other services. Descriptions of such applicability are provided in 6.4.5, 6.4.9, 6.5.1(H), 6.5.3, 6.6.1(G), 6.6.2(D), 6.7.1(F) and 6.8.1(E) following. Finally, a credit is applied against line side Switched Access Service charges as described in 6.4.8 following.

APPROVED FOR FILING - THE PUBLIC SERVICE COMMISSION OF SOUTH CAROLINA - JULY 15, 2014

Switched Access Service

6.1 General (Cont'd)

6.1.1 Description and Provision of Switched Access Service Arrangements

(A) Description

Switched Access Service is provided in four different Feature Group arrangements which are service categories of standard and optional features. These are differentiated by their technical characteristics, e.g., line side vs. trunk side connection at the Telephone Company first point of switching. They are also differentiated by optional feature availability and the manner in which the end user accesses them in originating calling, e.g., with or without access codes of various lengths and digits.

The provision of each Feature Group requires Local Transport facilities, including an Entrance Facility where required, and the appropriate End Office functions. In addition, Special Access Service may, at the option of the customer, be connected with Feature Groups A, B, C, or D at Telephone Company designated WATS Serving Offices.

There are three specific transmission specifications (i.e., Types A, B and C) that have been identified for the provision of Feature Groups. The technical specifications for the Entrance Facility and Direct Trunked Transport are the same as those set forth in Section 7. following for Voice Grade and High Capacity services. The specifications provided are dependent on the Interface Group and the routing of the service, i.e., whether the service is routed directly to the end office or via an access tandem. The parameters for the transmission specifications are set forth in 15.1.2 following.

APPROVED FOR FILING - THE PUBLIC SERVICE COMMISSION OF SOUTH CAROLINA - JULY 15, 2014

Switched Access Service

6.1 General (Cont'd)

6.1.1 Description and Provision of Switched Access Service Arrangements (Cont'd)

(A) Description (Cont'd)

Feature Groups are arranged for either originating, terminating or two-way calling, based on the customer end office switching capacity ordered. Originating calling permits the delivery of calls from Telephone Exchange Service locations to the customer designated premises. Terminating calling permits the delivery of calls from the customer designated premises to Telephone Exchange Service locations. Two-way calling permits the delivery of calls in both directions, but not simultaneously. The Telephone Company will determine the type of calling to be provided unless the customer requests that a different type of directional calling is to be provided. In such cases, the Telephone Company will work cooperatively with the customer to determine the directionality.

There are various optional features associated with Local Transport, Common Switching and Transport Termination available with the Feature Groups. In addition, the Interim NXX Translation and Operator Transfer Service optional feature is available with Feature Group C and Feature Group D.

Operator Transfer Services will be provided over FGC or FGD switched access service trunks from the operator service location to the customer's premises. Where required by technical limitations, a separate FGC or FGD trunk group will be established for Operator Transfer Service. The operator service location will provide trunk answer and disconnect supervisory signaling to the customer.

Detailed descriptions of each of the available Feature Groups are set forth in 6.5 through 6.9 following. Each Feature Group is described in terms of its specific physical characteristics and calling capabilities, the optional features available for use with it and the standard testing capabilities.

The Common Switching and Transport Termination optional features, which are described in 6.10 following, unless specifically stated otherwise, are available at all Telephone Company end office switches.

APPROVED FOR FILING - THE PUBLIC SERVICE COMMISSION OF SOUTH CAROLINA - JULY 15, 2014

Switched Access Service

6.1 General (Cont'd)

6.1.1 Description and Provision of Switched Access Service Arrangements (Cont'd)

(B) Manner of Provision

Switched Access is furnished in either quantities of lines or trunks, or in busy hour minutes of capacity (BHMCs). FGA Access and FGB Access are furnished on a per-line or per-trunk basis respectively. FGC Access and FGD Access are furnished on a BHMC basis and a per trunk basis as set forth in 5.2 preceding.

BHMCs are differentiated by type and directionality of traffic carried over a Switched Access Service arrangement. Differentiation of traffic among BHMC types is necessary for the Telephone Company to properly design Switched Access Service to meet the traffic carrying capacity requirement of the customer.

There are three major BHMC categories identified as: Originating, Terminating and Directory Assistance. Originating BHMCs represent access capacity within a LATA for carrying traffic from the end user to the customer; Terminating BHMCs represent access capacity within a LATA for carrying traffic from the customer to the end user; and, Directory Assistance BHMCs represent access capacity within a LATA for carrying Directory Assistance traffic from the customer to a Directory Assistance location. When ordering capacity for FGC Access or FGD Access in BHMCs the customer must at a minimum specify such access capacity in terms of Originating BHMCs and/or Terminating BHMCs.

APPROVED FOR FILING - THE PUBLIC SERVICE COMMISSION OF SOUTH CAROLINA - JULY 15, 2014

Switched Access Service

6.1 General (Cont'd)

6.1.1 Description and Provision of Switched Access Service Arrangements (Cont'd)

(B) Manner of Provision (Cont'd)

Because some customers will wish to further segregate their originating traffic into separate trunk groups or because segregation may be required by network considerations, originating BHMCs are further categorized into Domestic, 700, 800, 888, 877, 900, Operator, IDDD and Operator Transfer Services. Domestic BHMCs represent access capability for carrying only domestic traffic other than 700, 800, 888, 877, 900, Operator and Operator Transfer Services traffic; IDDD BHMCs represent access capacity for carrying only international traffic; and, 700, 800, 888, 877, 900, Operator and Operator Transfer Services BHMCs represent access capacity for carrying, respectively, only 700, 800, 888, 877, 900, Operator or Operator Transfer Services traffic. When ordering such types of access capacity, the customer must specify Domestic, 700, 800, 888, 877, 900, Operator, IDDD or Operator Transfer Services BHMCs.

6.1.2 Ordering Options and Conditions

Switched Access Service is ordered under the Access Order provisions set forth in 5.2 preceding. Also, included in that section are regulations concerning miscellaneous service order charges which may be associated with Switched Access Service ordering (e.g., Service Date Changes, Cancellations, etc.).

6.1.3 Rate Categories

There are four rate categories which apply to Switched Access Service:

- Local Transport (described in 6.1.3(A) following)
- End Office (described in 6.1.3(B) following)
- Chargeable Optional Features (described in 6.1.3(C) following)
- Common Line (described in Sections 3. preceding)

APPROVED FOR FILING - THE PUBLIC SERVICE COMMISSION OF SOUTH CAROLINA - JULY 15, 2014

Switched Access Service

6.1 General (Cont'd)

6.1.3 Rate Categories (Cont'd)

The following diagram depicts a generic view of the components of Switched Access Service and the manner in which the components are combined to provide a complete Access Service.

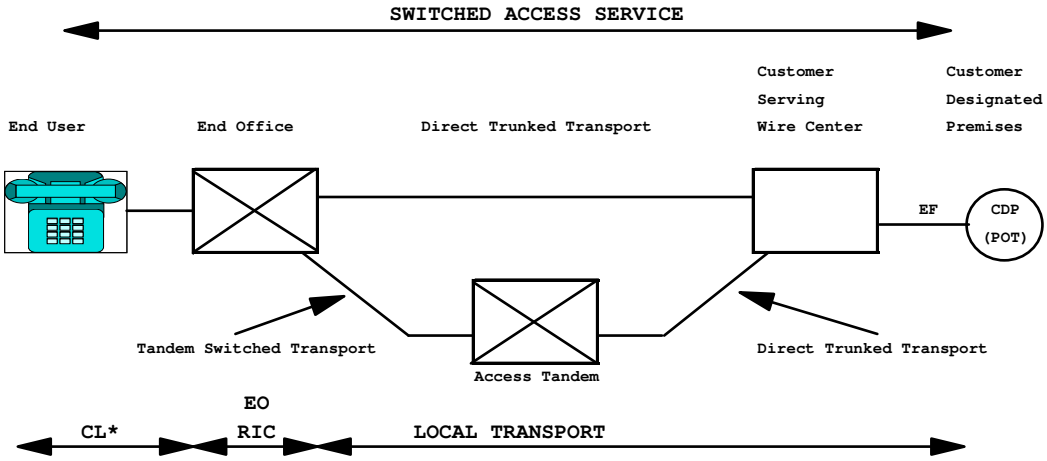

CL - Common Line
EO - End Office
EF - Entrance Facility
RIC - Residual Interconnection Charge

Direct Trunked Transport
- Direct Trunked Facility
- Direct Trunked Termination

Tandem Switched Transport
- Tandem Switched Facility
- Tandem Switched Termination
- Tandem Switching

* Common Line Access Service is provided under Section 3. Preceding

*Common Line Access Service is provided under Section 3. Preceding.

APPROVED FOR FILING - THE PUBLIC SERVICE COMMISSION OF SOUTH CAROLINA - JULY 15, 2014

Switched Access Service

6.1 General (Cont'd)

6.1.3 Rate Categories (Cont'd)

(A) Local Transport

The Local Transport rate category establishes the charges related to the transmission and tandem switching facilities between the customer designated premises and the end office switch(es), which may be a Remote Switching Module(s) or WATS Serving Office, where the customer's traffic is switched to originate or terminate the customer's communications. Mileage measurement rules are set forth in 6.4.6 following and in this section.

Local Transport is a two-way voice frequency transmission path composed of facilities determined by the Telephone Company. The two-way voice frequency transmission path permits the transport of calls in the originating direction (from the end user end office switch to the customer designated premises) and in the terminating direction (from the customer designated premises to the end office switch), but not simultaneously. The voice frequency transmission path may be comprised of any form or configuration of plant capable of and typically used in the telecommunications industry for the transmission of voice and associated telephone signals within the frequency bandwidth of approximately 300 to 3000 Hz. The customer must specify the choice of facilities (i.e., Voice Grade 2 or 4 wire or High Capacity DS1 or DS3) to be used in the provision of the Direct Trunked Transport or Entrance Facility. Direct Trunked Transport and Entrance Facility Services are only available in conjunction with facilities transporting originating Feature Group D usage.

The customer must specify when ordering (1) whether the service is to be directly routed to an end office switch or through an access tandem switch, (2) the type of Direct Trunked Transport and whether it will overflow to Tandem Switched Transport when service is directly routed to an end office, (3) the type of Entrance Facility, (4) the directionality of the service, and (5) when multiplexing is required, the hub(s) at which the multiplexing will be provided.

APPROVED FOR FILING - THE PUBLIC SERVICE COMMISSION OF SOUTH CAROLINA - JULY 15, 2014

Switched Access Service

6.1 General (Cont'd)

6.1.3 Rate Categories (Cont'd)

(A) Local Transport (Cont'd)

Additionally, when service is to be routed through a Windstream access tandem switch, the customer must order the facility between the serving wire center and the tandem as Direct Trunked Transport.

When the customer has both Tandem Switched Transport and Direct Trunked Transport at the same end office, the customer will be provided Alternate Traffic Routing as set forth in 6.4.6 following.

Direct Trunked Transport is available at all tandems and at all end offices except those end offices identified in NATIONAL EXCHANGE CARRIER ASSOCIATION, INC. TARIFF F.C.C. No. 4, as not having the capability to provide Direct Trunked Transport. Direct Trunked Transport is not available: (1) from end offices that provide equal access through a Centralized Equal Access arrangement, or (2) from end offices that lack recording or measurement capability.

Normally, Direct Trunked Transport of originating 800/888/877 calls from an end office is available only from Service Switching Point (SSP) equipped end offices. However, certain non-SSP equipped end offices can accommodate direct trunking of originating 800/888/877 calls. These end offices are also identified in NATIONAL EXCHANGE CARRIER ASSOCIATION, INC., TARIFF F.C.C. No. 4.

Unless otherwise ordered by the F.C.C., where the Telephone Company elects to provide equal access through a centralized equal access arrangement, the Telephone Company will designate the serving wire center. The designated SWC will normally be that wire center which provides dial tone to the telephone company centralized Equal Access tandem office identified in NATIONAL EXCHANGE CARRIER ASSOCIATION, INC. TARIFF F.C.C. NO. 4.

APPROVED FOR FILING - THE PUBLIC SERVICE COMMISSION OF SOUTH CAROLINA - JULY 15, 2014

Switched Access Service

6.1 General (Cont'd)

6.1.3 Rate Categories (Cont'd)

(A) Local Transport (Cont'd)

When service is provided in cooperation with a non telephone company provider of centralized Equal Access, the SWC will be that wire center which would normally provide dial tone to the telephone company point of interconnection with the non telephone company provider of Centralized Equal Access specified in the tariff of the Centralized Equal Access provider. Those Telephone Company offices providing equal access through centralized arrangements are identified in NATIONAL EXCHANGE CARRIER ASSOCIATION, INC. TARIFF F.C.C. NO. 4.

Local Transport is provided at the rates and charges set forth in 17.2.2 following. The application of these rates with respect to individual Feature Groups is as set forth in 6.4.1(C) following. When more than one Telephone Company is involved in providing the Switched Access Service, the Local Transport rates are applied as set forth in 2.4.7 preceding.

The Local Transport Rate Category includes five classifications of rate elements: (1) Entrance Facility, (2) Direct Trunked Transport, (3) Tandem Switched Transport, (4) Residual Interconnection Charge, and (5) Multiplexing.

(1) Entrance Facility

The Entrance Facility recovers a portion of the costs associated with a communications path between a customer designated premises and the serving wire center of that premises. Included as part of the Entrance Facility is a standard channel interface arrangement which defines the technical characteristics associated with the type of facilities to which the access service is to be connected at the customer designated premises and the type of signaling capability, if any.

APPROVED FOR FILING - THE PUBLIC SERVICE COMMISSION OF SOUTH CAROLINA - JULY 15, 2014

Switched Access Service

6.1 General (Cont'd)

6.1.3 Rate Categories (Cont'd)

(A) Local Transport (Cont'd)

(1) Entrance Facility (Cont'd)

Three types of Entrance Facility are available: (1) Voice Grade 2 or 4 wire (an analog channel with an approximate bandwidth of 300 to 3000 Hz), (2) High Capacity DS1 (an isochronous serial digital channel with a rate of 1.544 Mbps) and (3) High Capacity DS3 (an isochronous serial digital channel with a rate of 44.736 Mbps). The minimum period for which a DS3 Entrance Facility is provided is twelve months.

One charge applies for each Entrance Facility that is terminated at a customer designated premises. This charge specified in 17.2.2 following will apply even if the customer designated premises and the serving wire center are collocated in a Telephone Company building.

A customer's Local Transport may be connected to the Entrance Facility of another customer, providing the other customer submits a Letter of Authorization for this connection and assumes full responsibility for the cost of the Entrance Facility.

(2) Direct Trunked Transport

The Direct Trunked Transport rate elements recover a portion of the cost associated with a communications path between a serving wire center and an end office or serving wire center and a tandem on circuits dedicated to the use of a single customer.

Direct Trunked Transport is required at all tandems and is available to all end offices except those end offices identified in NATIONAL EXCHANGE CARRIER ASSOCIATION, INC. TARIFF F.C.C. NO. 4, WIRE CENTER INFORMATION as not having the capability to provide Direct Trunked Transport.

APPROVED FOR FILING - THE PUBLIC SERVICE COMMISSION OF SOUTH CAROLINA - JULY 15, 2014

Switched Access Service

6.1 General (Cont'd)

6.1.3 Rate Categories (Cont'd)

(A) Local Transport (Cont'd)

(2) Direct Trunked Transport (Cont'd)

Direct Trunked Transport is not available: (1) from end offices that provide equal access through a Centralized Equal Access arrangement, or (2) from end offices that lack recording or measurement capability.

Normally, Direct Trunked Transport of originating 800/888/877 calls from an end office is available only from Service Switching Point (SSP) equipped end offices. However, certain non-SSP equipped end offices can accommodate direct trunking of originating 800/888/877 calls. These end offices are also identified in NATIONAL EXCHANGE CARRIER ASSOCIATION, INC., TARIFF F.C.C. No. 4.

Three types of Direct Trunked Transport are available: (1) Voice Grade (an analog channel with an approximate bandwidth of 300 to 3000 Hz), (2) High Capacity DS1 (an isochronous serial digital channel with a rate of 1.544 Mbps), and (3) High Capacity DS3 (an isochronous serial digital channel with a rate of 44.736 Mbps). The minimum period for which a High Capacity DS3 Direct Trunked Transport is provided is twelve months.

High Capacity DS3 Direct Trunked Transport can not be terminated at end offices that are not identified as hub offices that provide DS3 to DS1 multiplexing. Additionally, DS1 Direct Trunked Transport can not be terminated at end offices that are not identified as hub offices that provide DS1 to Voice Grade multiplexing or are not electronic end offices. Offices that provide multiplexing are identified in NATIONAL EXCHANGE CARRIER ASSOCIATION, INC. TARIFF F.C.C. NO. 4, WIRE CENTER INFORMATION.

APPROVED FOR FILING - THE PUBLIC SERVICE COMMISSION OF SOUTH CAROLINA - JULY 15, 2014

Switched Access Service

6.1 General (Cont'd)

6.1.3 Rate Categories (Cont'd)

(A) Local Transport (Cont'd)

(2) Direct Trunked Transport (Cont'd)

Direct Trunked Transport rates consist of a Direct Trunked Facility rate specified in 17.2.2 following which is applied on a per mile basis and a Direct Trunked Termination rate which is applied at each end of each measured segment of the Direct Trunked Facility (e.g., at the end office, hub, tandem, and serving wire center). When the Direct Trunked Facility mileage is zero, neither the Direct Trunked Facility rate nor the Direct Trunked Termination rate will apply.

The Direct Trunked Facility rate recovers a portion of the costs of transmission facilities, including intermediate transmission circuit equipment, between the end points of the interoffice circuits.

The Direct Trunked Termination rate specified in 17.2.2 following recovers a portion of the costs of the circuit equipment that is necessary for the termination of each end of the Direct Trunked Facility.

(3) Tandem Switched Transport

The Tandem Switched Transport rate elements recover a portion of the costs associated with a communications path between a tandem and an end office on circuits that are switched at a tandem switch.

APPROVED FOR FILING - THE PUBLIC SERVICE COMMISSION OF SOUTH CAROLINA - JULY 15, 2014

Switched Access Service

6.1 General (Cont'd)

6.1.3 Rate Categories (Cont'd)

(A) Local Transport (Cont'd)

(3) Tandem Switched Transport (Cont'd)

Tandem Switched Transport rates consist of a Tandem Switching rate, a Tandem Switched Facility rate, and a Tandem Switched Termination rate. When the Telephone company has identified in NECA Tariff F.C.C. No. 4, Wire Center Information that it has not received a bona fide request for Direct Trunked Transport, Local Transport Facility and Local Transport Termination rates and charges will apply instead of Tandem Switched Facility, Tandem Switched Termination, and Tandem Switching rates and charges.

(a) The Tandem Switching rate recovers a portion of the costs of switching traffic through an access tandem. The Tandem Switching rate specified in 17.2.2 following is applied on a per access minute per tandem basis for all originating and all terminating minutes of use switched at the tandem. Tandem locations are identified in NATIONAL EXCHANGE CARRIER ASSOCIATION, INC. TARIFF F.C.C. NO. 4 WIRE CENTER INFORMATION.

(b) The Tandem Switched Facility rate recovers a portion of the costs of transmission facilities, including intermediate transmission circuit equipment, between the end points of interoffice circuits. The Tandem Switched Facility rate specified in 17.2.2 following is applied on a per access minute per mile basis for all originating and terminating minutes of use routed over the facility.

(c) The Tandem Switched Termination rate recovers a portion of the costs of circuit equipment necessary for the termination of each end of each measured segment of the Tandem Switched Facility. The Tandem Switched Termination rate specified in 17.2.2 following is applied on a per access minute basis (for all originating

APPROVED FOR FILING - THE PUBLIC SERVICE COMMISSION OF SOUTH CAROLINA - JULY 15, 2014

Switched Access Service

6.1 General (Cont'd)

6.1.3 Rate Categories (Cont'd)

(A) Local Transport (Cont'd)

(3) Tandem Switched Transport (Cont'd)

(c) (Cont'd)

and terminating minutes of use routed over the facility) at each end of each measured segment of Tandem Switched Facility (e.g., at the end office, Feature Group A dial tone office, host office, tandem, and serving wire center). When the Tandem Switched Facility mileage is zero, neither the Tandem Switched Facility rate nor the Tandem Switched Termination rate will apply.

(d) The Local Transport Facility rate recovers a portion of the cost related to the transmission and tandem switching facilities between the customer designated premises and the end office switch(es) when the customer's traffic is switched to originate or terminate the customer's communications. For purposes of determining Local Transport Facility measurement, distance will be measured from the wire center that normally serves the customer designated premises to the end office switch(es), which may be Remote Switching Module(s). Exceptions to the Local Transport Facility measurement rules are as set forth in 6.4.6 following. The Local Transport Facility rate specified in 17.2.2 following is applied on a per access minute per mile basis for all originating and terminating minutes of use routed over the facility.

APPROVED FOR FILING - THE PUBLIC SERVICE COMMISSION OF SOUTH CAROLINA - JULY 15, 2014

Switched Access Service

6.1 General (Cont'd)

6.1.3 Rate Categories (Cont'd)

(A) Local Transport (Cont'd)

(3) Tandem Switched Transport (Cont'd)

(a) The Local Transport Termination rate provides for the communications frequency transmission path at the Telephone Company switching office and includes a portion of Central Office Switching and Central Office Circuit equipment (e.g. signaling, transmission devices, padding, carrier channels, etc.). The Local Transport Termination rate specified in 17.2.2 following is applied on a per access minute basis (for all originating and terminating minutes of use routed over the facility) at the end of the Local Transport Facility that is most distant from the customer's designated premises (e.g. end office). The Local Transport Termination rate will also apply if the IC serving wire center and the end user serving wire center are collocated.

APPROVED FOR FILING - THE PUBLIC SERVICE COMMISSION OF SOUTH CAROLINA - JULY 15, 2014

Switched Access Service

6.1 General (Cont'd)

6.1.3 Rate Categories (Cont'd)

(A) Local Transport (Cont'd)

(4) Residual Interconnection Charge

The Residual Interconnection Charge recovers the costs associated with Local Transport that are not recovered by the Entrance Facility, Direct Trunked Transport, Tandem Switched Transport, Multiplexing, or dedicated signaling (i.e., SS7) rates. The Residual Interconnection Charge specified in 17.2.2 following applies to both Tandem Switched and Direct Trunked access minutes of use.

The Residual Interconnection Charge does not apply when the Telephone Company has identified in NECA Tariff F.C.C. No. 4, Wire Center Information that it has not received a bona fide request for Direct Trunked Transport and is therefore applying Local Transport Facility and Local Transport Termination rates and charges instead of Tandem Switched Facility, Tandem Switched Termination, and Tandem Switching rates and charges.

(5) Multiplexing

DS3 to DS1 Multiplexing charges specified in 17.2.2 following apply when a High Capacity DS3 Entrance Facility or High Capacity DS3 Direct Trunked Facility is connected with High Capacity DS1 Direct Trunked Transport. The DS3 to DS1 multiplexer will convert a 44.736 Mbps channel to 28 DS1 channels using digital time division multiplexing.

APPROVED FOR FILING - THE PUBLIC SERVICE COMMISSION OF SOUTH CAROLINA - JULY 15, 2014

Switched Access Service

6.1 General (Cont'd)

6.1.3 Rate Categories (Cont'd)

(A) Local Transport (Cont'd)

(5) Multiplexing (Cont'd)

DS1 to Voice Grade Multiplexing charges apply when a High Capacity DS1 Entrance Facility or High Capacity DS1 Direct Trunked Facility is connected with Voice Grade Direct Trunked Transport. However, a DS1 to Voice Grade Multiplexing charge does not apply when a High Capacity DS1 Entrance Facility or High Capacity DS1 Direct Trunked Transport is terminated at an electronic end office and only Switched Access Service is provided over the DS1 facility (i.e., Voice Grade Special Access channels are not derived). The DS1 to Voice Grade multiplexer will convert a 1.544 Mbps channel to 24 Voice Grade channels.

Multiplexing is only available at wire centers identified in NATIONAL EXCHANGE CARRIER ASSOCIATION, INC., TARIFF F.C.C. NO. 4, WIRE CENTER INFORMATION.

(6) Interface Groups

Ten Interface Groups are provided for terminating the Entrance Facility at the customer's designated premises. Technical specifications concerning the available interface groups are set forth in 15.1 following.

APPROVED FOR FILING - THE PUBLIC SERVICE COMMISSION OF SOUTH CAROLINA - JULY 15, 2014

Switched Access Service

6.1 General (Cont'd)

6.1.3 Rate Categories (Cont'd)

(A) Local Transport (Cont'd)

(7) Nonchargeable Optional Features

Where transmission facilities permit, the individual transmission path between the customer's designated premises and the first point of switching, may at the option of the customer, be provided with the following optional features as set forth and described in 15.1.1(E) following.

- Supervisory Signaling
- Customer Specified Entry Switch Receive Level
- Customer Specification of Local Transport Termination

When a customer subscribes to Common Channel Signaling (SS7) Network Connection Service (CCSNC Service), the following optional features are made available and are described in 6.10.1 following.

- Signaling System 7 (SS7) Signaling
- Calling Party Number
- Carrier Selection Parameter
- Charge Number Parameter

APPROVED FOR FILING - THE PUBLIC SERVICE COMMISSION OF SOUTH CAROLINA - JULY 15, 2014

Switched Access Service

6.1 General (Cont'd)

6.1.3 Rate Categories (Cont'd)

(A) Local Transport (Cont'd)

(3) Chargeable Optional Features

800/888/877 Data Base Access Service is provided to all customers in conjunction with FGC and FGD switched access service. A Basic or Vertical Feature Query charge, as set forth in 17.2.2 (B) following, is assessed for each completed query returned from the 800/888/877 data base whether or not the actual call is delivered to the customer. The query is considered completed when the appropriate call routing information is returned to the Service Switching Point (SSP) that launched the query. The Basic Query provides the identification of the customer to whom the call will be delivered and includes area of service routing which allows routing of 800/888/877 calls by telephone companies to different interexchange carriers based on the Local Access Transport Area (LATA) in which the call originates. The Vertical Feature Query provides this same customer identification function in addition to vertical features which may include: (1) call validation (ensuring that calls originate from subscribed service areas); (2) POTS translation of 800/888/877 numbers (which is generally necessary for the routing of 800/888/877 calls); (3) alternate POTS translation (which allows subscribers to vary the routing of 800/888/877 calls based on factors such as time of day, place of origination of the call, etc.); and (4) multiple carrier routing (which allows subscribers to route to different carriers based on factors similar to those in (3).

(B) End Office

The End Office rate category establishes the charges related to the local end office switching and end user termination functions necessary to complete the transmission of Switched Access communications to and from the end users served by the local end office. The End Office rate category includes the Local Switching and Information Surcharge rate elements. Directory Assistance Service is set forth in Section 9. following.

APPROVED FOR FILING - THE PUBLIC SERVICE COMMISSION OF SOUTH CAROLINA - JULY 15, 2014

Switched Access Service

6.1 General (Cont'd)

6.1.3 Rate Categories (Cont'd)

(B) End Office (Cont'd)

(1) Local Switching

The Local Switching rate element establishes the charges related to the use of end office switching equipment, the terminations in the end office of end user lines, and the terminations of calls at Telephone Company Intercept Operators or recordings. The premium charge is divided into two distinct categories, i.e., Local Switching 1 and Local Switching 2. The first category, Local Switching 1, is applicable to Feature Groups A and B. Local Switching 1 does not apply to:

- Feature Group A and B when utilized to provide MTS/WATS service, and

- Feature Groups A and B used for terminating inward WATS and WATS-type service at an equal access WATS Serving Office.

The second category, Local Switching 2, is applicable to:

- Feature Groups C and D, and

- FGA and FGB when utilized to provide MTS/WATS service.

- FGB when routed over FGD facilities at an end office or access tandem.

APPROVED FOR FILING - THE PUBLIC SERVICE COMMISSION OF SOUTH CAROLINA - JULY 15, 2014

Switched Access Service

6.1 General (Cont'd)

6.1.3 Rate Categories (Cont'd)

(B) End Office (Cont'd)

(1) Local Switching (Cont'd)

- Feature Groups A and B used for terminating inward WATS and WATS-type service at an equal access WATS Serving Office.

Local Switching does not apply to Feature Groups B and D Switched Access Services associated with Wireless Switching Center (WSCs) directly interconnected to a Telephone Company access tandem office.

Where end offices are appropriately equipped, international dialing may be provided as a capability associated with Local Switching 2 which provides local dial switching for Feature Groups C and D. International dialing provides the capability of switching international calls with service prefix and address codes having more digits than are capable of being switched through a standard FGC or FGD equipped end office.

Rates for Local Switching 1 and Local Switching 2 are set forth in 17.2.3 following. The application of these rates with respect to individual Feature Groups is as set forth in 6.4.1(C) following.

There are four types of functions included in the Local Switching rate element: Common Switching, Transport Termination, Line Termination and Intercept. These are described in (a) through (d) following.

APPROVED FOR FILING - THE PUBLIC SERVICE COMMISSION OF SOUTH CAROLINA - JULY 15, 2014

Switched Access Service

6.1 General (Cont'd)

6.1.3 Rate Categories (Cont'd)

(B) End Office (Cont'd)

(1) Local Switching (Cont'd)

(a) Common Switching

Common Switching provides the local end office switching functions associated with the various access (i.e., Feature Group) switching arrangements. The Common Switching arrangements provided for the various Feature Group arrangements are described in 6.5 through 6.9 following.

Included as part of Common Switching are various nonchargeable optional features which the customer can order to meet the customer's specific communications requirements. These optional features are described in 6.10.1 following.

(b) Transport Termination

Transport Termination functions provide for the line or trunk side arrangements which terminate the Local Transport facilities. Included as part of these functions are various nonchargeable optional termination arrangements. These optional terminating arrangements are described in 6.10.2 following.

The number of Transport Terminations provided will be determined by the Telephone Company as set forth in 6.2.5 following.

APPROVED FOR FILING - THE PUBLIC SERVICE COMMISSION OF SOUTH CAROLINA - JULY 15, 2014

Switched Access Service

6.1 General (Cont'd)

6.1.3 Rate Categories (Cont'd)

(B) End Office (Cont'd)

(1) Local Switching (Cont'd)

(c) Line Termination

Line Termination provides for the terminations of end user lines in the local end office. There are two types of Line Terminations, i.e., Common Line Terminations and Special Access Service Terminations utilized in the provision of WATS or WATS-type services at Telephone Company designated WATS Serving Offices.

The above Special Access Service Terminations are differentiated by line side vs. trunk side terminations. In addition, there are various types of originating and terminating line side terminations depending on the type of signaling associated with the Special Access Service. Line side terminations are available with either dial pulse or dual tone multifrequency address signaling.

APPROVED FOR FILING - THE PUBLIC SERVICE COMMISSION OF SOUTH CAROLINA - JULY 15, 2014

Switched Access Service

6.1 General (Cont'd)

6.1.3 Rate Categories (Cont'd)

(B) End Office (Cont'd)

(1) Local Switching (Cont'd)

(d) Intercept

The Intercept function provides for the termination of a call at a Telephone Company Intercept operator or recording. The operator or recording tells a caller why a call, as dialed, could not be completed, and if possible, provides the correct number.

(2) Information Surcharge

Information Surcharge rates are assessed to a customer based on the total number of access minutes. Information Surcharge rates are as set forth in 17.2.3(B) following. The application of these rates with respect to individual Feature Groups is as set forth in 6.4.1(C) following.

The Information Surcharge does not apply to Feature Groups B and D Switched Access Services associated with Wireless Switching Centers (WSCs) directly interconnected to a Telephone Company access tandem office.

The number of end office switching transmission paths will be determined as set forth in 6.2.5 following.

APPROVED FOR FILING - THE PUBLIC SERVICE COMMISSION OF SOUTH CAROLINA - JULY 15, 2014

Switched Access Service

6.1 General (Cont'd)

6.1.3 Rate Categories (Cont'd)

(C) Chargeable Optional Features

Where facilities permit, the Telephone Company will, at the option of the customer, provide the following chargeable optional features.

(1) Interim NXX Translation

The Interim NXX Translation rate element provides for customer identification of non-data base services when calls are directed by end users in the 1+SAC+NXX-XXXX (e.g., 1+900+NXX-XXX) format. The NXX codes are assigned to specific customers in conformance with the North American Numbering Plan (NANP). NXX code assignment(s) will be made by the Bellcore NANP Coordinator. The Telephone Company will use the NXX code to identify the customer to whose point of termination the traffic is to be delivered, (i.e., at appropriately equipped electronic end offices, access tandems or through contracted arrangements with other parties.) It is then the responsibility of the customer to do any further translation the customer deems necessary to route the call. Customer assigned NXX codes which have not been ordered will be blocked.

APPROVED FOR FILING - THE PUBLIC SERVICE COMMISSION OF SOUTH CAROLINA - JULY 15, 2014

Switched Access Service

6.1 General (Cont'd)

6.1.3 Rate Categories (Cont'd)

(C) Chargeable Optional Features (Cont'd)

(1) Interim NXX Translation (Cont'd)

A nonrecurring charge, as set forth in 17.2.1 following, is associated with this optional feature. This nonrecurring charge is assessed by the Telephone Company on a per order, per LATA or Market Area basis and is applied in lieu of the Access Order Charge specified in 17.4.1(A) following. The nonrecurring charge is assessed only by the Telephone Company that provides the final translation function. A Telephone Company is said to have provided the final Interim NXX Translation when its translation identifies the customer's traffic and this traffic is then delivered to the customer's point of termination without any further translation. The description and application of this charge with respect to Feature Group C and Feature Group D is as set forth in 6.4.1(B)(2) and 6.4.1(C)(2) following.

(2) 800/888/877 Data Base Access Service

800/888/877 Data Base Access Service is provided to all customers in conjunction with FGC and FGD switched access service. When a 1+800+NXX-XXXX, 1+888+NXX-XXXX or a 1+877+NXX-XXXX call is originated by an end user, the Telephone Company will utilize the Signaling System 7 (SS7) network to query an 800/888/877 data base to identify the customer to whom the call will be delivered and provide vertical features based on the dialed ten digits. The call will then be routed to the identified customer over FGC or FGD switched access.

A Basic or Vertical Feature Query charge, as set forth in 17.2.2 following, is assessed for each completed query returned from the data base identifying the customer to whom the call will be delivered whether or not the actual call is delivered is delivered to the customer. The query is considered completed when the appropriate call routing information is returned to the Service Switching Point (SSP) that launched the query. The Basic Query provides the identification of the customer to whom the call will be delivered and includes area of service routing which allows routing of 800/888/877 calls by telephone companies to different interexchange carriers based on the Local Access Transport Area (LATA) in which the call originates. (C)

APPROVED FOR FILING - THE PUBLIC SERVICE COMMISSION OF SOUTH CAROLINA - JULY 15, 2014

Switched Access Service

6.1 General (Cont'd)

6.1.3 Rate Categories (Cont'd)

(C) Chargeable Optional Features (Cont'd)

(2) 800/888/877 Data Base Access Service (Cont'd)

The Vertical Feature Query provides the same customer identification as the basic query and vertical features which may include: (1) call validation, (ensuring that calls originate from subscribed service areas); (2) POTS translation of 800/888/877 numbers; (3) alternate POTS (C) translation (which allows subscribers to vary the routing of 800/888/877 calls based on factors such as time of day, (C) place or origination of the call, etc.); and (4) multiple carrier routing (which allows subscribers to route to different carriers based on factors similar to those in (3)).

The description and application of this charge with respect to Feature Group C or Feature Group D is as set forth in 6.4.1(C)(2) and 6.4.1(C)(8) following.

(3) Flexible Automatic Number Identification (Flex ANI)

The Flex ANI rate element provides for the addition of the Flex ANI feature to Feature Group D (FGD) trunk groups. Flex ANI is a Common Switching optional feature that enhances the existing Automatic Number Identification ANI) optional feature (described in 6.10.1 following) by allowing FGD customers to receive additional information digits. Flex ANI provides additional values for these information digits over and above the values currently available with ANI and will be used to identify additional call types, i.e., calls from WATS lines and private virtual networks. Flex ANI is available to customers with FGD Switched Access Service equipped with ANI.

APPROVED FOR FILING - THE PUBLIC SERVICE COMMISSION OF SOUTH CAROLINA - JULY 15, 2014

Switched Access Service

6.1 General (Cont'd)

6.1.4 Special Facilities Routing

Any customer may request that the facilities used to provide Switched Access Service be specially routed. The regulations for Special Facilities Routing (i.e., Avoidance, Diversity and Cable-Only) are set forth in Section 11. following.

6.1.5 Design Layout Report

At the request of the customer, the Telephone Company will provide to the customer the makeup of the facilities and services provided from the customer's premises to the first point of switching. This information will be provided in the form of a Design Layout Report. The Design Layout Report will be provided to the customer at no charge, and will be reissued or updated whenever these facilities are materially changed.

APPROVED FOR FILING - THE PUBLIC SERVICE COMMISSION OF SOUTH CAROLINA - JULY 15, 2014

Switched Access Service

6.2 Undertaking of the Telephone Company

In addition to the obligations of the Telephone Company set forth in Section 2. preceding, the Telephone Company has certain other obligations concerning only the provision of Switched Access Service. These obligations are as follows:

6.2.1 Network Management

The Telephone Company will administer its network to insure the provision of acceptable service levels to all telecommunications users of the Telephone Company's network services. Generally, service levels are considered acceptable only when both end users and customers are able to establish connections with little or no delay encountered within the Telephone Company network. The Telephone Company maintains the right to apply protective controls, i.e., those actions, such as call gapping, which selectively cancel the completion of traffic, over any traffic called over its network, including that associated with a customer's Switched Access Service. Generally, such protective measures would only be taken as a result of occurrences such as failure or overload of Telephone Company or customer facilities, natural disasters, mass calling or national security demands. In the event that the protective controls applied by the Telephone Company result in the complete loss of service by the customer, the customer will be granted a Credit Allowance for Service Interruption as set forth in 2.4.4(B)(3) preceding.

APPROVED FOR FILING - THE PUBLIC SERVICE COMMISSION OF SOUTH CAROLINA - JULY 15, 2014

Switched Access Service

6.2 Undertaking of the Telephone Company (Cont'd)

6.2.2 Transmission Specifications

Each Switched Access Service transmission path is provided with standard transmission specifications. There are three different standard specifications (Types A, B and C). The standard for a particular transmission path is dependent on the Feature Group, the Interface Group and whether the service is directly routed or via an access tandem. The available transmission specifications are set forth in 15.1.2 following. Data Transmission Parameters are also provided with each Switched Access Service transmission path. The Telephone Company will, upon notification by the customer that the data parameters set forth in 15.1.3 following are not being met, conduct tests independently or in cooperation with the customer, and take any necessary action to insure that the data parameters are met.

The Telephone Company will maintain existing transmission specifications on functioning service configurations installed prior to May 25, 1984 except that service configurations having performance specifications exceeding the standards set forth in 15.1.2 following will be maintained at performance levels specified.

The transmission specifications concerning Switched Access Service are limits which, when exceeded, may require the immediate corrective action of the Telephone Company. The transmission specifications are set forth in 15.1.2 following. Acceptance limits are set forth in Technical Reference TR-NWT-000334. This Technical Reference also provides the basis for determining Switched Access Service maintenance limits.

APPROVED FOR FILING - THE PUBLIC SERVICE COMMISSION OF SOUTH CAROLINA - JULY 15, 2014

6.2 Undertaking of the Telephone Company (Cont'd)

6.2.3 Provision of Service Performance Data

Subject to availability, end-to-end service performance data available to the Telephone Company through its own service evaluation routines, may also be made available to the customer based on previously arranged intervals and format. These data provide information on overall end-to-end call completion and non- completion performance, e.g., customer equipment blockage, failure results and transmission performance. These data do not include service performance data which are provided under other tariff sections, e.g., testing service results. If data are to be provided in other than paper format, the charges for such exchange will be determined on an individual case basis.

6.2.4 Testing

(A) Acceptance Testing

At no additional charge the Telephone Company will, at the customer's request, cooperatively test at the time of installation, the following parameters: loss, C-notched noise, C-message noise, 3-tone slope, d.c. continuity and operational signaling. When the Local Transport is provided with Interface Groups 2 through 10, and the Transport Termination is two-wire (i.e., there is a four-wire to two-wire conversion in Local Transport), balance parameters (equal level echo path loss) may also be tested.

APPROVED FOR FILING - THE PUBLIC SERVICE COMMISSION OF SOUTH CAROLINA - JULY 15, 2014

6.2 Undertaking of the Telephone Company (Cont'd)

6.2.4 Testing (Cont'd)

(B) Routine Testing

At no additional charge, the Telephone Company will, at the customer's request, test after installation on an automatic or manual basis, 1004 Hz loss, C-message noise and Balance (Improved Return loss).

In the case of automatic testing, the customer shall provide remote office test lines and 105 test lines with associated responders or their functional equivalent.

The frequency of these tests will be that which is mutually agreed upon by the customer and the Telephone Company, but shall consist of not less than quarterly 1004Hz Loss and C-message noise tests and an annual Balance test. Trunk test failures requiring customer participation for trouble resolution will be provided to the customer on an as-occurs basis.

Additional tests may be ordered as set forth in 13.3.1 following. Charges for these additional tests are set forth in 17.4.4 following.

APPROVED FOR FILING - THE PUBLIC SERVICE COMMISSION OF SOUTH CAROLINA - JULY 15, 2014

6. Switched Access Service (Cont'd)

6.2 Undertaking of the Telephone Company (Cont'd)

6.2.5 Determination of Number of Transmission Paths

For Feature Groups A and B, which are ordered on a per line or per trunk basis respectively, and Feature Groups C and D when ordered on a per trunk basis, the customer specifies the type of transport facilities and the number of channels in the order for service.

For Tandem Switched Transport, the Telephone Company will determine the number of Switched Access Service transmission paths to be provided for the Switched Access Feature Group C or D busy hour minutes of capacity ordered. The number of transmission paths will be developed using the total busy hour minutes of capacity by type (as described in 6.1.1(B) preceding) for the end offices for each Feature Group ordered from a customer's designated premises. The total busy hour minutes of capacity by type (e.g., originating, terminating, IDDD, Operator) for the end office will be converted to transmission paths using standard Telephone Company traffic engineering methods. The number of transmission paths provided shall be the number required based on (1) the use of access tandem switches and end office switches, (2) the use of end office switches only, or (3) the use of tandem switches only.

APPROVED FOR FILING - THE PUBLIC SERVICE COMMISSION OF SOUTH CAROLINA - JULY 15, 2014

6. Switched Access Service (Cont'd)

6.2 Undertaking of the Telephone Company (Cont'd)

6.2.6 Trunk Group Measurement Reports

Subject to availability, the Telephone Company will make available trunk group data in the form of usage in CCS, peg count and overflow, to the customer based on previously agreed to intervals.

APPROVED FOR FILING - THE PUBLIC SERVICE COMMISSION OF SOUTH CAROLINA - JULY 15, 2014

Switched Access Service

6.3 Obligations of the Customer

In addition to the obligations of the customer set forth in Section 2. preceding, the customer has certain specific obligations pertaining to the use of Switched Access Service. These obligations are as follows:

6.3.1 Report Requirements

Customers are responsible for providing the following reports to the Telephone Company, when applicable.

(A) Jurisdictional Reports

When a customer orders Switched Access Service for both interstate and intrastate use, the customer is responsible for providing reports as set forth in 2.3.11 preceding. Charges will be apportioned in accordance with those reports. The method to be used for determining the intrastate charges is set forth in 2.3.12 preceding.

(B) Code Screening Reports

When a customer orders service class routing, trunk access limitation or call gapping arrangements, it must report the number of trunks and/or the appropriate codes to be instituted in each end office or access tandem switch, for each of the arrangements ordered.

APPROVED FOR FILING - THE PUBLIC SERVICE COMMISSION OF SOUTH CAROLINA - JULY 15, 2014

Switched Access Service

6.3 Obligations of the Customer (Cont'd)

6.3.2 Trunk Group Measurement Reports

With the agreement of the customer, trunk group data in the form of usage in CCS, peg count and overflow for its end of all access trunk groups, were technologically feasible, will be made available to the Telephone Company. These data will be used to monitor trunk group utilization and service performance and will be based on previously arranged intervals and format.

6.3.3 Supervisory Signaling

The customer's facilities shall provide the necessary on-hook, off-hook, answer and disconnect supervision.

6.3.4 Short Duration Mass Calling Requirements

When a customer offers service for which a substantial call volume is expected during a short period of time (e.g., 900 service media stimulated events), the customer must notify the Telephone Company at least 48 hours in advance of each peak period. Notification should include the nature, time, duration, and frequency of the event, as estimated call volume, and the telephone number(s) to be used.

On the basis of the information provided, the Telephone Company may invoke network management controls, (e.g., call gapping and code blocking) to reduce the probability of excessive network congestion. The Telephone Company will work cooperatively with the customer to determine the appropriate level of such control.

APPROVED FOR FILING - THE PUBLIC SERVICE COMMISSION OF SOUTH CAROLINA - JULY 15, 2014

Switched Access Service

6.4 Rate Regulations

This section contains the specific regulations governing the rates and charges that apply for Switched Access Service.

6.4.1 Description and Application of Rates and Charges

There are two types of rates and charges that apply to Switched Access Service; recurring (usage and flat rates) and nonrecurring charges. These rates and charges are applied differently to the various rate elements as set forth in (C) following.

(A) Recurring Rates

(1) Usage rates for Switched Access Service are rates that apply on a per minute basis or a per call basis. Access minute charges and per call charges are accumulated over a monthly period.

(2) Flat Rates for Switched Access Service are rates that apply on a per month per rate element basis.

(B) Nonrecurring Charges

Nonrecurring charges are one-time charges that apply for a specific work activity (i.e., installation or change to an existing service). The types of nonrecurring charges that apply for Switched Access Service are: installation of service, Interim NXX Translation optional feature and service rearrangements. These charges, with the exception of the Interim NXX Translation optional feature, are in addition to the Access Order Charge as specified in 17.4.1(A) following.

(1) Installation of Service

When the Telephone Company has identified in NECA Tariff F.C.C. No. 4, Wire Center Information that it has not received a bona fide request for Direct Trunked Transport, a nonrecurring Installation per Line or Trunk Charge as set forth in 17.2.1(F) following applies to each Switched Access Service installed. For FGA, which is ordered on a per line basis, and for FGB, FBC and FGD, which is ordered on a per trunk

APPROVED FOR FILING - THE PUBLIC SERVICE COMMISSION OF SOUTH CAROLINA - JULY 15, 2014

Switched Access Service

6.4 Rate Regulations (Cont'd)

6.4.1 Description and Application of Rates and Charges (Cont'd)

(B) Nonrecurring Charges (Cont'd)

(1) Installation of Service (Cont'd)

basis, the charge is applied on a per line or trunk basis respectively. For FGC and FGD, which are ordered on a busy hour minutes of capacity basis, the charge is also applied on a per trunk basis but the charge applies only when the capacity ordered requires the installation or activation of an additional trunk(s) which is uniquely identified for the sole use of the ordering customer.

For Entrance Facilities, a Local Transport nonrecurring installation charge, as set forth in 17.2.1(A) following, will be applied at the serving wire center for each Entrance Facility installed. This charge is not applied when the Telephone Company has identified in NECA Tariff F.C.C. No. 4 Wire Center Information that it has not received a bona fide request for Direct Trunked Transport.

For Direct Trunked Transport ordered to the end office, a Local Transport nonrecurring trunk activation charge, as set forth in 17.2.1 (E) following, will be applied at the end office on a per order basis for each group of 24 Direct Trunked Transport trunks or fraction thereof that is activated at the end office.

For Direct Trunked Transport ordered to the access tandem, a Local Transport nonrecurring trunk activation charge, as set forth in 17.2.1(E) following, will be applied at the access tandem on a per order basis for each group of 24 Direct Trunked Transport trunks or fraction thereof that is activated at the access tandem.

For Tandem Switched Transport, a Local Transport nonrecurring trunk activation charge, as set forth in 17.2.1(E) following, will be applied at the access tandem on a per order basis for each group of 24 dedicated trunks or fraction thereof that is activated at the access tandem.

APPROVED FOR FILING - THE PUBLIC SERVICE COMMISSION OF SOUTH CAROLINA - JULY 15, 2014

Switched Access Service

6.4 Rate Regulations (Cont'd)

6.4.1 Description and Application of Rates and Charges (Cont'd)

(B) Nonrecurring Charges (Cont'd)

(1) Installation of Service (Cont'd)

A maximum of 24 trunks can be activated on a DS1 facility and a maximum of 672 trunks can be activated on a DS3 facility.

For example, if a customer orders a DS1 Entrance Facility and requests activation of 18 of the available circuits, the customer will be charged one Local Transport High Capacity DS1 Installation nonrecurring charge at the serving wire center and one Direct Trunked Transport Activation nonrecurring charge at the end office. If at a later date the customer requests the activation of three more circuits, the customer will then be charged an additional Direct Trunked Transport Activation nonrecurring charge. These charges are in addition to the Access Order Charge as specified in 17.4.1(A) following.

(2) Interim NXX Translation Optional Feature

This nonrecurring charge applies to the initial order for the installation of the Interim NXX Translation optional feature with Feature Group C or Feature Group D Switched Access Service and for each subsequent order received to add or change NXX Translation codes. This charge, if applicable, applies whether this optional feature is installed coincident with or at any time subsequent to the installation of Switched Access Services. This charge is applied by the Telephone Company per order, per LATA or Market Area. When it is necessary for multiple telephone companies to provide the translation function, the nonrecurring charge is assessed only by the Telephone Company that provides the final translation function which identifies the customer's traffic and this traffic is then delivered to the customer's point of termination without any further translation.

APPROVED FOR FILING - THE PUBLIC SERVICE COMMISSION OF SOUTH CAROLINA - JULY 15, 2014

Switched Access Service

6.4 Rate Regulations (Cont'd)

6.4.1 Description and Application of Rates and Charges (Cont'd)

(B) Nonrecurring Charges (Cont'd)

(3) Service Rearrangements

All changes to existing services other than changes involving administrative activities and the off-hook supervisory signaling of FGA Access Services, will be treated as a discontinuance of the existing service and an installation of a new service. The nonrecurring charge described in (1) preceding will apply for this work activity. Moves that change the physical location of the point of termination are described and charged for as set forth in 6.4.4 following.

- If, due to technical limitations of the Telephone Company, a customer could not combine its Interim NXX traffic with its other trunk side Switched Access Services, no charge shall apply to combine these trunk groups when it becomes technically possible.

APPROVED FOR FILING - THE PUBLIC SERVICE COMMISSION OF SOUTH CAROLINA - JULY 15, 2014

Switched Access Service

6.4 Rate Regulations (Cont'd)

6.4.1 Description and Application of Rates and Charges (Cont'd)

(B) Nonrecurring Charges (Cont'd)

(3) Service Rearrangements (Cont'd)

Administrative changes will be made without charge(s) to the customer. Administrative changes are as follows:

- Change of customer name,
- Change of customer or customer's end user premises address when the change of address is not a result of a physical relocation of equipment,
- Change in billing data (name, address, or contact name or telephone number),
- Change of agency authorization,
- Change of customer circuit identification,
- Change of billing account number,
- Change of customer test line number,
- Change of customer or customer's end user contact name or telephone number, and
- Change of jurisdiction.

Other changes made without charges to the customers are as follows:

- Changes and additions to existing Switched Access Services which are necessary due to Telephone Company initiated network reconfigurations, and required to provide the same grade of service to the customer that existed prior to the reconfiguration. Charges will apply to those changes and additions which are in excess of those required to provide the same grade of service and/or capacity. Grade of service will be as determined by industry standard engineering tables.

APPROVED FOR FILING - THE PUBLIC SERVICE COMMISSION OF SOUTH CAROLINA - JULY 15, 2014

Switched Access Service

6.4 Rate Regulations (Cont'd)

6.4.1 Description and Application of Rates and Charges (Cont'd)

(B) Nonrecurring Charges (Cont'd)

(3) Service Rearrangements (Cont'd)

When a customer requests a change of trunks from Tandem-Switched Transport to Direct-Trunked Transport or from Direct-Trunked Transport to Tandem-Switched Transport, or requests to rearrange Switched Access services between lower and higher capacity facilities, (e.g., Voice Grade to/from DS1 or DS1 to/from DS3), the nonrecurring charges set forth in (1) preceding do not apply providing:

- the change is ordered anytime between October 1, 1994, December 31, 1994 and
- the change is completed no later than March 31, 1995, and
- the orders to disconnect existing trunks and to connect the new trunks are placed at the same time, and
- the number of installed trunks does not exceed the number of trunks disconnected. If the number of installed trunks exceeds the number of trunks disconnected, all nonrecurring charges will apply to the excess trunks unless the customer provides justification based upon standard engineering methods to show that the additional capacity is required to maintain the same level of service.

APPROVED FOR FILING - THE PUBLIC SERVICE COMMISSION OF SOUTH CAROLINA - JULY 15, 2014

Switched Access Service

6.4 Rate Regulations (Cont'd)

6.4.1 Description and Application of Rates and Charges (Cont'd)

(B) Nonrecurring Charges (Cont'd)

(3) Service Rearrangements (Cont'd)

Changes to the point in time when the off-hook supervisory signal is provided in the originating call sequence i.e., when the off-hook supervisory signal is changed from being provided by the customer's equipment before the called party answers to being forwarded by the customer's equipment when the called party answers or vice versa, are subject to the Access Order Charge as set forth in 17.4.1(A) following.

For additions, changes or modifications to an optional feature which has a separate nonrecurring charge, that nonrecurring charge will apply.

For additions, changes, or modifications to optional features that do not have their own separate nonrecurring charges, an Access Order Charge as set forth in 17.4.1(A) following will apply. When an optional feature is not required on each transmission path, but rather for an entire transmission path group, an end office or an access tandem switch, only one such charge will apply (i.e., it will not apply per transmission path).

(4) SS7\MF Signaling Trunk Group Conversion Charge

For conversion of FGC and FGD trunks from multifrequency address signaling to SS7 signaling or from SS7 signaling to multifrequency address signaling, nonrecurring charges will apply as set forth in 17.2.1.

The Trunk group conversion charge is applied on a per trunk group basis or major fraction thereof, and is applicable when the total number of trunks in a trunk group remain the same. Additions of new trunks will follow the regulations, rates, and charges associated with the installation of new services as set forth in 6.4.1 preceding.

APPROVED FOR FILING - THE PUBLIC SERVICE COMMISSION OF SOUTH CAROLINA - JULY 15, 2014

Switched Access Service

6.4 Rate Regulations (Cont'd)

6.4.1 Description and Application of Rates and Charges (Cont'd)

(B) Nonrecurring Charges (Cont'd)

(4) SS7\MF Signaling Trunk Group Conversion Charge (Cont'd)

During the conversion of a trunk group from MF to SS7 signaling, a customer may add Calling Party Number (CPN), Charge Number (CN) and/or Carrier Selection Parameter (CSP) optional features.

The Access Order Charge, as set forth in 17.4.1 following will apply to each order received by the Telephone Company to convert an existing FGC or FGD trunk group(s) from MF to SS7 signaling or from SS7 to MF signaling.

(C) Application of Rates

Rates are applied either as premium rates or non-premium rates.

The application of these rates is dependent upon the Feature Group, type of Entrance Facility, type of transport (e.g., Direct Trunked Transport, Tandem Switched Transport, type of Multiplexing) and the availability of equal access capabilities in the end office to which the service is provided.

APPROVED FOR FILING - THE PUBLIC SERVICE COMMISSION OF SOUTH CAROLINA - JULY 15, 2014

Switched Access Service

6.4 Rate Regulations (Cont'd)

6.4.1 Description and Application of Rates and Charges (Cont'd)

(C) Application of Rates (Cont'd)

The following rules provide the basis for applying the rates and charges:

(1) Premium Rates

Premium rates apply to all FGC access minutes when the service is provided to customers which furnish intrastate MTS/WATS, to all access minutes that originate or terminate at end offices equipped with equal access (i.e., FGD) capabilities, and to Direct Transport Services. Premium rates also apply to FGB and FGD access minutes that originate or terminate at a Wireless Switching Center (WSC) that is directly connected to a Telephone Company access tandem office. In addition, premium rates apply to FGA and FGB access minutes when utilized in the provision of MTS/WATS service or when routed over FGD facilities at an end office or access tandem.

In addition, premium rates always apply to the following Local Transport rate elements:

- Entrance Facility
- Direct Trunked Facility
- Direct Trunked Termination
- Multiplexing
- Tandem Switched Facility
- Tandem Switched Termination
- Tandem Switching

APPROVED FOR FILING - THE PUBLIC SERVICE COMMISSION OF SOUTH CAROLINA - JULY 15, 2014

Switched Access Service

6.4 Rate Regulations (Cont'd)

6.4.1 Description and Application of Rates and Charges (Cont'd)

(C) Application of Rates (Cont'd)

(2) Non-premium Rates (Cont'd)

Non-premium rates do not apply to the following Local Transport rate elements:

- Entrance Facility
- Direct Trunked Facility
- Direct Trunked Termination
- Multiplexing
- Tandem Switched Facility
- Tandem Switched Termination
- Tandem Switching

Non-premium rates (i.e., discounted access minute rates) apply to all FGA and FGB access minute (measured or assumed) originating or terminating in an end office which is not equipped with equal access capabilities.

In addition, non-premium rates apply to FGC access minutes originating in an end office which is not equipped with equal access capabilities when the FGC service is used in conjunction with the Interim NXX Translation optional feature or 800/888/877 Data Base services by customers who do not furnish interstate MTS/WATS.

Non-Premium rates do not apply to FGB ADA access minutes.

APPROVED FOR FILING - THE PUBLIC SERVICE COMMISSION OF SOUTH CAROLINA - JULY 15, 2014

Switched Access Service

6.4 Rate Regulations (Cont'd)

6.4.1 Description and Application of Rates and Charges (Cont'd)

(C) Application of Rates (Cont'd)

(3) Reserved For Future Use

APPROVED FOR FILING - THE PUBLIC SERVICE COMMISSION OF SOUTH CAROLINA - JULY 15, 2014

Switched Access Service

6.4 Rate Regulations (Cont'd)

6.4.1 Description and Application of Rates and Charges (Cont'd)

(C) Application of Rates (Cont'd)

(4) Transition Billing Arrangement

When FGA, or FGB Switched Access Service, except as set forth in (1) preceding, provided to an entry switch (i.e., dial tone office for FGA and access tandem for FGB) has usage originating from and/or terminating at both end offices that have been converted to equal access and end offices that have not been converted, the premium and non-premium transitional rates will apply in the following manner:

(a) All access minutes that originate from or terminate at the equal access end office(s) will be billed at premium rates. Access minutes that originate from or terminate at end offices not equipped with equal access capabilities, hereinafter referred to as non-premium access minutes, will continue to be billed at non-premium rates. Non-premium rates will apply as follows depending on the type of service.

(i) For FGA and FGB services, the number of non-premium access minutes to be billed at non-premium rates is derived by subtracting the number of premium rated access minutes from the total number of access minutes.

(ii) Premium access minutes will be determined as set forth in (b) following.

APPROVED FOR FILING - THE PUBLIC SERVICE COMMISSION OF SOUTH CAROLINA - JULY 15, 2014

Switched Access Service

6.4 Rate Regulations (Cont'd)

6.4.1 Description and Application of Rates and Charges (Cont'd)

(C) Application of Rates (Cont'd)

(4) Transition Billing Arrangement (Cont'd)

(b) The number of access minutes to be rated as premium access minutes is determined as follows:

(i) Where end office specific usage data is available, premium rates apply to the measured access minutes originating from or terminating at the equal access end office(s).

(ii) Where end office specific usage data is not available for originating and/or terminating FGA or FGB, the total originating and/or terminating usage will be measured or assumed usage at the entry switch as set forth respectively in 6.5.4 and 6.6.4 following. Originating and/or terminating usage will then be apportioned between premium and non-premium access minutes.

APPROVED FOR FILING - THE PUBLIC SERVICE COMMISSION OF SOUTH CAROLINA - JULY 15, 2014

Switched Access Service

6.4 Rate Regulations (Cont'd)

6.4.1 Description and Application of Rates and Charges (Cont'd)

(C) Application of Rates (Cont'd)

(4) Transition Billing Arrangement (Cont'd)

(b) (Cont'd)

(ii) (Cont'd)

Such apportionment will be based on the ratio of the number of subscriber lines in the access area (i.e., local calling areas for FGA originating minutes, LATA for FGA terminating minutes and end offices subtending the access tandem for FGB minutes) of the first point of switching that are served by equal access end offices to the total number of subscriber lines in that access area. The ratio thus developed is applied to the total measured or assumed originating FGA usage, terminating FGA usage, originating FGB usage or terminating FGB usage, as applicable, to determine the usage to be billed at premium rates, unless adjusted as set forth in (iii) following.

APPROVED FOR FILING - THE PUBLIC SERVICE COMMISSION OF SOUTH CAROLINA - JULY 15, 2014

Switched Access Service

6.4 Rate Regulations (Cont'd)

6.4.1 Description and Application of Rates and Charges (Cont'd)

(C) Application of Rates (Cont'd)

(4) Transition Billing Arrangement (Cont'd)

(b) (Cont'd)

(ii) (Cont'd)

The ratios used to calculate the premium usage will be determined on a quarterly basis. The ratios to be used for the succeeding quarter will be provided to the customer with the last bill rendered in the quarter or mailed separately within five working days after the first day of the new quarter (i.e., January, April, October and October).

For purposes of administering this provision: (1) subscriber lines are defined as exchange service lines, Centrex lines and Centrex-type lines provided by the Telephone Company under its local and/or general exchange service tariff; (2) the access area is defined as the local calling area of the dial tone office for originating FGA, the entire LATA for terminating FGA, and all end offices subtending the access tandem for originating and terminating FGB; and (3) the local calling area of the dial tone office is as defined in the Telephone Company's local and/or general exchange service tariff.

APPROVED FOR FILING - THE PUBLIC SERVICE COMMISSION OF SOUTH CAROLINA - JULY 15, 2014

Switched Access Service

6.4 Rate Regulations (Cont'd)

6.4.1 Description and Application of Rates and Charges (Cont'd)

(C) Application of Rates (Cont'd)

(4) Transition Billing Arrangement (Cont'd)

(b) (Cont'd)

(iii) Where FGD Switched Access Service is provided to a customer in an end office(s) where that customer's FGA or FGB premium access minutes have been determined in accordance with (ii) preceding, such premium access minutes will be adjusted in the following manner. For each FGD access minute originating from or terminating at that end office, excluding those FGD minutes of use associated with Operator Transfer Service, the originating or terminating FGA or FGB premium access minutes determined as set forth in (ii) preceding will be reduced on a one for one basis, but in no event shall the reduction exceed the total number of FGA or FGB premium access minutes originating from or terminating at that end office. For each FGA or FGB premium minute of use reduction in either the originating or terminating direction, a corresponding originating or terminating non- premium minute of use will be apportioned to those end offices in the access area that are non-equal. Such apportionment will be based upon a ratio of the number of subscriber lines in each non-equal end office to the total subscriber lines that are served by all non-equal end offices in the access area. The customer will be billed for the revised number of premium or non-premium access minutes.

APPROVED FOR FILING - THE PUBLIC SERVICE COMMISSION OF SOUTH CAROLINA - JULY 15, 2014

Switched Access Service

6.4 Rate Regulations (Cont'd)

6.4.1 Description and Application of Rates and Charges (Cont'd)

(C) Application of Rates (Cont'd)

(5) Unmeasured FGA and FGB Access Services

Where originating and/or terminating measurement capability does not exist for Feature Group A or Feature Group B Switched Access Services provided to the first point of switching, the number of access minutes that will be assumed are as set forth following in 6.5.4 and 6.6.4 respectively.

(6) Notice of Equal Access Conversion

The Telephone Company will provide written notification to all access customers of record within a particular LATA that an end office in that LATA is scheduled to be converted to an equal access end office. This notification will be sent, via certified U.S. Mail, to each customer of record in the LATA where the conversion is scheduled to occur, at least six months in advance of the conversion date.

The customer will have the choice of converting all or part of the existing services to equal access (i.e., Feature Group D) or retaining the existing services. The conversion of existing services will be at no charge provided the order to convert such services to Feature Group D is received as set forth in 6.4.3 following. Premium rates will apply to the total access minutes beginning on the actual conversion date, whether the customer chooses to convert to FGD or retain existing services.

APPROVED FOR FILING - THE PUBLIC SERVICE COMMISSION OF SOUTH CAROLINA - JULY 15, 2014

Switched Access Service

6.4 Rate Regulations (Cont'd)

6.4.1 Description and Application of Rates and Charges (Cont'd)

(C) Application of Rates (Cont'd)

(7) Common Channel Signaling/Signaling System 7 (CCS/SS7) Network Connection Service

The CCS/SS7 Network Connection is comprised of a Signaling Mileage Facility charge, a Signaling Mileage Termination charge, a Signaling Entrance Facility charge, and a Signaling Transfer Point (STP) Port charge.

The Signaling Mileage Facility charge is assessed on a per facility per mile basis. The Signaling Mileage Termination charge is assessed on a per termination basis (i.e., at each end of the Signaling Mileage Facility). When the Signaling Mileage Facility mileage measurement is zero, Signaling Mileage Termination charges do not apply.

The Signaling Entrance Facility charge is assessed on a per facility basis for the connection between the customer's designated premises (Signaling Point of Interface) and the serving wire center of that premises.

The STP Port charge is assessed on a per port basis for each termination of a Signaling Mileage Facility at an STP.

(8) 800/888/877 Data Base Access Service

A Basic Query or Vertical Feature Query charge applies for each completed query that is returned from the 800/888/877 data base identifying the customer to whom the call will be delivered whether or not the actual call is delivered to the customer. The query is considered completed when the appropriate call routing information is returned to the Service Switching Point (SSP) that launched the query. Query charges, as set forth in 17.2.2(B), will only be applied by those companies whose wire centers are identified as assessing query charges in the NATIONAL EXCHANGE CARRIER ASSOCIATION, INC. TARIFF F.C.C. NO. 4.

APPROVED FOR FILING - THE PUBLIC SERVICE COMMISSION OF SOUTH CAROLINA - JULY 15, 2014

Switched Access Service

6.4 Rate Regulations (Cont'd)

6.4.1 Description and Application of Rates and Charges (Cont'd)

(C) Application of Rates (Cont'd)

(8) 800/888/877 Data Base Access Service (Cont'd)

When Feature Group C or Feature Group D switched access service is used for the provision of 800/888/877 Data Base Access Service and the total minutes of use and/or count of queries can be determined for each customer at a tandem or SSP but can not be determined by individual end office, an allocation method will be utilized to determine minutes of use and/or queries by end office and customer. For each end office a ratio will be developed and applied against the total minutes of use and/or count of queries for a given customer as determined by the tandem or SSP. These ratios will be developed by dividing the unidentified originating 800/888/877 minutes of use at an end office by the total unidentified originating minutes of use in all end offices subtending the tandem or SSP. For example, assume:

- Three end offices (EO-1, EO-2, and EO-3) subtend a tandem

  EO-1 measures 2,000 minutes of 800/888/877 use
  EO-2 measures 3,000 minutes of 800/888/877 use
  EO-3 measures 5,000 minutes of 800/888/877 use
  10,000 TOTAL

- The tandem delivers 800/888/877 usage to two customers:

  IC-A has 4,000 minutes of use
  IC-B has 6,000 minutes of use

- The allocation of use to be billed by EO-1 are

  800 to IC-A (20% X 4,000)
  1,200 to IC-B (20% X 6,000)
  2,000 TOTAL

APPROVED FOR FILING - THE PUBLIC SERVICE COMMISSION OF SOUTH CAROLINA - JULY 15, 2014

Switched Access Service

6.4 Rate Regulations (Cont'd)

6.4.2 Minimum Monthly Charge

Switched Access Service is subject to a minimum monthly charge. The minimum charge applies for the total capacity provided. The minimum monthly charge is calculated as follows.

For usage rated Local Transport, Local Switching and Information Surcharge rate elements, the minimum monthly charge is the sum of the recurring charges set forth in 17.2.2 and 17.2.3 following for either the actual measured usage or the assumed usage prorated to the number of days or major fraction of days based on a 30 day month.

For flat rated Local Transport rate elements, the minimum monthly charge is the sum of the recurring charges set forth in 17.2.2 following prorated to the number of days or major fraction of days on a 30 day month.

APPROVED FOR FILING - THE PUBLIC SERVICE COMMISSION OF SOUTH CAROLINA - JULY 15, 2014

Switched Access Service

6.4 Rate Regulations (Cont'd)

6.4.3 Change of Switched Access Service Arrangements

Changes from one type of Feature Group to another will be treated as a discontinuance of one type of service and a start of another. Nonrecurring charges will apply, with one exception. When a customer upgrades a Feature Group A or B service to a Feature Group D service and when Feature Group C is upgraded to Feature Group D coincident with the availability of Feature Group D in an end office, the nonrecurring charges associated with the equal access conversion will not apply. Nonrecurring charges for other associated service requests, (e.g., a simultaneous change from multifrequency address signaling to SS7 signaling) will apply. Minimum period obligations will not change, i.e., the time elapsed in the existing minimum period obligation will be credited to the minimum period obligations for Feature Group D service, subject to the following limitations.

In order to avoid the imposition of nonrecurring charges a customer which is a participant in the presubscription allocation process (i.e., is on the presubscription ballot) must:

- submit its order to disconnect Feature Group A and/or B within 30 days after the date the results of the final allocation of customers in an end office are actually received by the customer, and

- make the effective date for disconnection of the Feature Group A and/or B Access Services no later than 60 days after the final allocation results are received by the customer.

A customer which is not a participant in the allocation process (i.e., is not on the presubscription ballot) is subject to the same rules preceding. The time frames for the non participating customer(s) are the same as those which apply to the last customer to receive the results of the final allocation of customers in an end office who is a participant in the allocation process. For all other changes from one type of Feature Group to another, new minimum period obligations will be established.

APPROVED FOR FILING - THE PUBLIC SERVICE COMMISSION OF SOUTH CAROLINA - JULY 15, 2014

6.4 Rate Regulations (Cont'd)

6.4.4 Moves

A move involves a change in the physical location of one of the following:

- The point of termination at the customer's premises
- The customer's designated premises

The charges for the move are dependent on whether the move is to a new location within the same building or to a different building.

(A) Moves Within the Same Building

When the move is to a new location within the same building, the charge for the move will be an amount equal to one half of the installation nonrecurring charge for the capacity affected. This charge is in addition to the Access Order Charge as specified in 17.4.1(A) following. There will be no change in the minimum period requirements.

(B) Moves to a Different Building

Moves to a different building will be treated as a discontinuance and start of service and all associated nonrecurring charges will apply. New minimum period requirements will be established for the new service. The customer will also remain responsible for satisfying all outstanding minimum period charges for the discontinued service.

6.4.5 Local Information Delivery Services

Calls over Switched Access Service in the terminating direction to certain community information services will be rated under the applicable rates for Switched Access Service as set forth in 17.2 following. In addition, the charges per call as specified under the Telephone Company's local and/or general exchange service tariffs, e.g., 976 (DIAL-IT) Network Services, will also apply.

APPROVED FOR FILING - THE PUBLIC SERVICE COMMISSION OF SOUTH CAROLINA - JULY 15, 2014

Switched Access Service

6.4 Rate Regulations (Cont'd)

6.4.6 Mileage Measurement

The mileage to be used to determine the monthly rate for Local Transport is calculated on the airline distance between the end office switch, which may be a Remote Switching Module, where the call carried by Local Transport originates or terminates at the customer's serving wire center. When Tandem Switched Transport or Direct Trunked Transport is ordered between the serving wire center and the end office, mileage is normally measured in one segment from the serving wire center to the end office. When Direct Trunked Transport is ordered between a serving wire center and a tandem and Tandem Switched Transport is ordered between the tandem and the end office, mileage is calculated separately for each segment. Exceptions to those methods are as set forth in (B) through (I) following.

Where applicable, the V&H coordinates method is used to determine mileage. This method is set forth in the NATIONAL EXCHANGE CARRIER ASSOCIATION, INC. TARIFF F.C.C. NO. 4 for Wire Center Information (V&H coordinates).

Mileage rates are as set forth in 17.2.2 following. To determine the rate to be billed, first compute the airline mileage using the V&H coordinates method. If the calculation results in a fraction of a mile, always round up to the next whole mile before determining the mileage and applying the rates. Then multiply the mileage by the appropriate rate.

Exceptions to the mileage measurement rules are as follows:

(A) Reserved For Future Use

APPROVED FOR FILING - THE PUBLIC SERVICE COMMISSION OF SOUTH CAROLINA - JULY 15, 2014

Switched Access Service

6.4 Rate Regulations (Cont'd)

6.4.6 Mileage Measurement (Cont'd)

(B) Feature Group A - Originating Usage

Direct Trunked Transport mileage for premium and non-premium rated access minutes in the originating direction over Feature Group A Switched Access Service will be calculated on an airline basis, using the V&H coordinates method. The mileage measurement will be between the first point of switching (end office switch where the Feature Group A switching dial tone is provided) and the customer's serving wire center for the Switched Access Service provided. This exception does not apply to access minutes originating and/or terminating in an Extended Area Service area as set forth in 6.4.1(C)(7) preceding. Extended Area Service area (PEC/SEC) mileage measurement exceptions are found in (D) following.

Local Transport Facility mileage is calculated in the same manner for FGA when the Telephone Company has identified in NECA Tariff F.C.C. No. 4, Wire Center Information that it has not received a bona fide request for Direct Trunked Transport and therefore applies Local Transport Facility rates.

(C) Feature Group A Terminating Usage

The Local Transport mileage for terminating Feature Group A Switched Access Service when the Telephone Company provides Direct Trunked Transport will be measured in two segments. Direct Trunked Transport mileage will be measured between the customer's serving wire center and the first point of switching (i.e., the end office switch where the Feature Group A switching dial tone is provided). Tandem Switched Transport mileage will be measured between the first point of switching and the terminating end office.

APPROVED FOR FILING - THE PUBLIC SERVICE COMMISSION OF SOUTH CAROLINA - JULY 15, 2014

Switched Access Service

6.4 Rate Regulations (Cont'd)

6.4.6 Mileage Measurement (Cont'd)

(D) Feature Groups B, C and D - Alternate Traffic Routing

When the Alternate Traffic Routing optional feature is provided with Feature Groups B, C or D, the Local Transport access minutes will be apportioned between the two trunk groups used to provide this feature. Such apportionment will be made using: (1) actual minutes of use if available, (2) standard Telephone Company traffic engineering methodology and will be based on the last trunk CCS desired for the high usage group, as described in 6.10.1(L) following (Alternate Traffic Routing), and the total busy hour minutes of capacity ordered to the end office, when the feature is provided at an end office switch, or to the subtending end offices when the feature is provided at an access tandem switch, or (3) an apportionment mutually agreed to by the Telephone Company and the customer. This apportionment will serve as the basis for Local Transport calculation.

(E) Feature Group C - Multiple CDPs

When terminating Feature Group C Switched Access Service is provided from multiple customer designated premises to an end office not equipped with measurement capabilities, the total Local Transport access minutes for that end office will be apportioned among the trunk groups accessing the end office on the basis of the individual busy hour minutes of capacity ordered for each of those trunk groups. This apportionment will serve as the basis for Local Transport mileage calculation.

APPROVED FOR FILING - THE PUBLIC SERVICE COMMISSION OF SOUTH CAROLINA - JULY 15, 2014

Switched Access Service

6.4 Rate Regulations (Cont'd)

6.4.6 Mileage Measurement (Cont'd)

(F) Feature Groups A, B, C and D - WATS

The Local Transport Facility for Feature Groups A, B, C and D Switched Access Service connected with Special Access Service at a WATS Serving Office (when measured access minutes of use are used) or between the Feature Group A entry switch (when assumed minutes of use are used) and the serving wire center for the customer designated premises.

(G) Feature Groups B and D - WSO's Directly Interconnected to Access Tandems

The Local Transport mileage for Feature Groups B and D switched access service provided to Wireless Switching Centers (WSCs) directly interconnected to a Telephone Company access tandem office will be determined on an airline basis, using the V&H coordinate method. The mileage will be measured between the customer's serving wire center and the Telephone Company access tandem office to which the WSO is interconnected.

(H) Feature Groups B, C, and D - Remote Offices

When the Telephone Company provides Direct Trunked Transport the Local Transport mileage for Feature Groups B, C, and D Switched Access Service provided to a Remote Office will be measured in multiple segments.

When the facility is directly trunked to the Host Office, Direct Trunked Facility mileage will be measured between the customer's serving wire center and the Host Office, and Tandem Switched Facility mileage will be measured between the Host Office and the Remote Office. The Tandem Switching charge will not apply.

When the facility is directly trunked to a tandem, Direct Trunked Facility will be measured from the Serving Wire Center to the tandem, Tandem Switched Facility will be measured from the tandem to the host, and another segment of Tandem Switched Facility will be measured from the host to the remote. A Tandem Switching charge will be applicable at the tandem.

APPROVED FOR FILING - THE PUBLIC SERVICE COMMISSION OF SOUTH CAROLINA - JULY 15, 2014

Switched Access Service

6.4 Rate Regulations (Cont'd)

6.4.6 Mileage Measurement (Cont'd)

(H) Feature Groups B, C, and D - Remote Offices (Cont'd)

When service to the remote is ordered as only Tandem Switching Facility, mileage will be separately measured between the serving wire center and the host and between the host and the end office. The Tandem Switching charge will be applicable at the tandem.

(I) Use of Telephone Company Hub

When multiplexing is performed at Telephone Company Hubs, mileage is computed and rates applied separately for each segment of the Local Transport Direct Trunked Facility (i.e., customer serving wire center to Hub, Hub to Hub, and/or Hub to end office).

APPROVED FOR FILING - THE PUBLIC SERVICE COMMISSION OF SOUTH CAROLINA - JULY 15, 2014

Switched Access Service

6.4 Rate Regulations (Cont'd)

6.4.7 Mixed Use

Mixed use occurs when Switched Access Service and Special Access Service are provided over the same High Capacity service through a common interface. The regulations governing the provision of Mixed Use Facilities are set forth in 5.2.4 preceding and 7.2.7 following.

The Telephone Company will designate the first point(s) of switching and routing to be used where equal access traffic is provided through a centralized equal access arrangement. Those Telephone Company offices providing equal access through centralized arrangements are identified in NATIONAL EXCHANGE CARRIER ASSOCIATION, INC. TARIFF F.C.C. NO. 4.

6.4.8 Message Unit Credit for Feature Group A

Calls from end users to the seven digit local telephone numbers associated with Feature Group A Switched Access Service are subject to Telephone Company local and/or general exchange service tariff charges (including message unit and toll charges as applicable). The monthly bills rendered to customers for their Feature Group A Switched Access Service will include a credit to reflect any message unit charges collected from their end users under the Telephone Company's local and/or general exchange service tariffs. When the customer is provided FGA service where measurement capability does not exist, the credit will apply to access minutes not to exceed the assumed originating access minutes. No credit will apply for any terminating FGA access minutes. The message unit credit for originating access minutes will be based on the generally applicable message unit charges of the Telephone Company.

APPROVED FOR FILING - THE PUBLIC SERVICE COMMISSION OF SOUTH CAROLINA - JULY 15, 2014

Switched Access Service

6.4 Rate Regulations (Cont'd)

6.4.9 Application of Rates for Feature Group A Extension Service

Feature Group A Switched Access Service is available with extensions, i.e., additional terminations of the service at different customer designated premises in the same LATA as the FGA dial tone office or a LATA other than the LATA where the FGA dial tone office is located. Feature Group A extensions within the same LATA and same state as the dial tone office are provided and charged for under the Telephone Company's local and/or general exchange service tariffs. Feature Group A extensions located in a LATA other than the LATA where the dial tone office is located or in a different state in the same LATA as the dial tone office are provided and charged as Special Access Service. The rate elements which apply are: A Voice Grade Channel Termination, Channel Mileage, if applicable, and Signaling Capability (optional features and functions), if applicable. All appropriate monthly rates and nonrecurring charges set forth in 17.3.4 following will apply.

APPROVED FOR FILING - THE PUBLIC SERVICE COMMISSION OF SOUTH CAROLINA - JULY 15, 2014

Switched Access Service

6.5 Description and Provision of Feature Group A (FGA)

6.5.1 Description

(A) FGA Access provides line side access to Telephone Company end office switches with an associated seven digit local telephone number for the customer's use in originating communications from and terminating communications to an Interexchange Carrier's Intrastate Service or a customer - provided intrastate communications capability. Customers must be interexchange carriers or resellers having a certificate of convenience and necessity from the South Carolina Public Service Commission. The customer must specify the Interexchange Carrier to which the FGA service is connected or, in the alternative, specify the means by which the FGA access communications is transported to another LATA. Special Access Services utilized for connection with FGA at Telephone Company designated WATS Serving Offices as set forth in Section 7. following may be ordered separately by a customer other than the customer which orders the FGA Switched Access Service for the provision of WATS-type services. Special Access Services are ordered as set forth in 5.2 preceding.

(B) FGA Switching is provided at all end office switches. At the option of the customer, FGA is provided on a single or multiple line group basis and is arranged for originating calling only, terminating calling only, or two-way calling.

(C) FGA provides a line side termination at the first point of switching (dial tone office). The line side termination will be provided with either ground start supervisory signaling or loop start supervisory signaling. The type of signaling is at the option of the customer.

APPROVED FOR FILING - THE PUBLIC SERVICE COMMISSION OF SOUTH CAROLINA - JULY 15, 2014

Switched Access Service

6.5 Description and Provision of Feature Group A (FGA)(Cont'd)

6.5.1 Description (Cont'd)

(D) The Telephone Company shall select the first point of switching, within the selected LATA, at which the line side termination is to be provided unless the customer requests a different first point of switching and Telephone Company facilities and measurement capabilities, where necessary, are available to accommodate such a request.

(E) A seven digit local telephone number assigned by the Telephone Company is provided for access to FGA switching in the originating direction. The seven digit local telephone number will be associated with the selected end office switch and is of the form NXX-XXXX.

If the customer requests a specific seven digit telephone number that is not currently assigned, and the Telephone Company can, with reasonable effort, comply with that request, the requested number will be assigned to the customer.

(F) FGA switching, when used in the terminating direction, is arranged with dial tone start-dial signaling. When used in the terminating direction FGA switching may, at the option of the customer, be arranged for dial pulse or dual tone multifrequency address signaling, subject to availability of equipment at the first point of switching. When FGA switching is provided in a hunt group or uniform call distribution arrangement, all FGA switching will be arranged for the same type of address signaling.

APPROVED FOR FILING - THE PUBLIC SERVICE COMMISSION OF SOUTH CAROLINA - JULY 15, 2014

Switched Access Service

6.5 Description and Provision of Feature Group A (FGA)(Cont'd)

6.5.1 Description (Cont'd)

(G) No address signaling is provided by the Telephone Company when FGA Switching is used in the originating direction. Address signaling in such cases, if required by the customer, must be provided by the customer's end user using inband tone signaling techniques. Such inband tone address signals will not be regenerated by the Telephone Company and will be subject to the ordinary transmission capabilities of the Local Transport provided.

(H) FGA switching, when used in the terminating direction, may be used to access valid NXXs in the LATA, local operator service (0- and 0+), Directory Assistance (411 where available and 555-1212), emergency reporting service (911 where available), exchange telephone repair (611 where available), time or weather announcement services of the Telephone Company, community information services of an information service provider, and other customers' services (by dialing the appropriate digits).

Charges for FGA terminating calls requiring operator assistance or calls to 611 or 911 will only apply where sufficient call details are available. Additional non-access charges will also be billed on

APPROVED FOR FILING - THE PUBLIC SERVICE COMMISSION OF SOUTH CAROLINA - JULY 15, 2014

Switched Access Service

6.5 Description and Provision of Feature Group A (FGA)(Cont'd)

6.5.1 Description (Cont'd)

(H) (Cont'd)

a separate account for (1) an operator surcharge, as set forth in the local exchange tariffs, for local operator assistance (0- and 0+) calls, (2) calls to certain community information services, for which rates are applicable under Telephone Company exchange service tariffs, e.g., 976 (DIAL-IT) Network Services, and, (3) calls from a FGA line to another customer's service in accordance with that customer's applicable service rates when the Telephone Company performs the billing function for that customer.

(I) When a FGA switching arrangement for an individual customer (a single line or entire hunt group) is discontinued at an end office, an intercept announcement is provided. This arrangement provides, for a limited period of time, an announcement that the service associated with the number dialed has been disconnected.

(J) FGA will be provisioned over an Entrance Facility from the customer's premises to the customer's serving wire center.

FGA service, when used in the originating direction, will be provisioned as Direct Trunked Transport from the first point of switching (i.e., the end office switch where FGA switching dial tone is provided) to the customer's serving wire center.

FGA service, when used in the terminating direction, will be provisioned as Direct Trunked Transport from the customer's serving wire center to the first point of switching and provisioned as Tandem Switched Transport from the first point of switching to the terminating end office. The Tandem Switching charge will not apply.

APPROVED FOR FILING - THE PUBLIC SERVICE COMMISSION OF SOUTH CAROLINA - JULY 15, 2014

Switched Access Service

6.5 Description and Provision of Feature Group A (FGA)(Cont'd)

6.5.2 Optional Features

Following are the various nonchargeable optional features that are available in lieu of, or in addition to, the standard features provided with Feature Group A. They are provided as Common Switching, Transport Termination or Local Transport options.

(A) Common Switching Options

Descriptions of the common switching optional features are set forth in 6.10 following.

(1) Call Denial on Line or Hunt Group

(2) Service Code Denial on Line or Hunt Group

(3) Hunt Group Arrangement

(4) Uniform Call Distribution Arrangement

(5) Nonhunting Number for Use with Hunt Group or Uniform Call Distribution Arrangement

(6) Band Advance Arrangement for Use with Special Access Service Utilized in the Provision of WATS-Type Services

(7) Hunt Group Arrangement for Use with Special Access Service Utilized in the Provision of WATS-Type Services

(8) Uniform Call Distribution Arrangement for Use with Special Access Service Utilized in the Provision of WATS-Type Services

(9) Nonhunting Number Associated with a Hunt Group Arrangement or Uniform Call Distribution Arrangement for Use with Special Access Service Utilized in the Provision of WATS-Type Services

APPROVED FOR FILING - THE PUBLIC SERVICE COMMISSION OF SOUTH CAROLINA - JULY 15, 2014

Switched Access Service

6.5 Description and Provision of Feature Group A (FGA)(Cont'd)

6.5.2 Optional Features (Cont'd)

(B) Transport Termination

(1) Two-way operation with dial pulse address signaling and loop start supervisory signaling
(2) Two-way operation with dial pulse address signaling and ground start supervisory signaling
(3) Two-way operation with dial tone multifrequency address signaling and loop start supervisory signaling
(4) Two-way operation with dial tone multifrequency address signaling and ground start supervisory signaling
(5) Terminating operation with dial pulse address signaling and loop start supervisory signaling
(6) Terminating operation with dial pulse address signaling and ground start supervisory signaling
(7) Terminating operation with dual tone multifrequency address signaling and loop start supervisory signaling
(8) Terminating operation with dual tone multifrequency address signaling and ground start supervisory signaling
(9) Originating operation with loop start supervisory signaling
(10) Originating operation with ground start supervisory signaling

(C) Local Transport Options

(1) Supervisory Signaling (as set forth in 15.1.1(E) following)
(2) Customer Specified Entry Switch Receive Level (as set forth in 15.1.1(E) following)

APPROVED FOR FILING - THE PUBLIC SERVICE COMMISSION OF SOUTH CAROLINA - JULY 15, 2014

Switched Access Service

6.5 Description and Provision of Feature Group A (FGA) (Cont'd)

6.5.3 Optional Features Provided In Local Tariffs

Certain other features which may be available in connection with Feature Group A (e.g., Speed Calling, Remote Call Forwarding, Bill Number Screening, IntraLATA extensions) are provided under the Telephone Company's local and/or general exchange service tariffs.

6.5.4 Measuring Access Minutes

Customer Feature Group A traffic to end offices will be measured (i.e., recorded) or assumed by the Telephone Company at end office switches. Originating and terminating calls will be measured (i.e., recorded) or assumed by the Telephone Company to determine the basis for computing chargeable access minutes. In the event the customer message detail is not available because the Telephone Company lost or damaged tapes or incurred recording system outages, the Telephone Company will estimate the volume of lost customer access minutes of use based on previously known values.

For terminating calls over FGA, and for originating calls over FGA (when the off-hook supervisory signal is provided by the customer's equipment before the called party answers), the measured minutes are the chargeable access minutes. For originating calls over FGA (when the off-hook supervisory signal is forwarded by the customer's equipment when the called party answers), chargeable originating access minutes are derived from recorded minutes using the same formula as set forth in 6.7.4 following for Feature Group C.

APPROVED FOR FILING - THE PUBLIC SERVICE COMMISSION OF SOUTH CAROLINA - JULY 15, 2014

Switched Access Service

6.5 Description and Provision of Feature Group A (FGA) (Cont'd)

6.5.4 Measuring Access Minutes (Cont'd)

For originating calls over FGA, usage measurement begins when the originating FGA first point of switching receives an off-hook supervisory signal forwarded from the customer's point of termination. This off-hook signal may be provided by the customer's equipment before the called party answers, or forwarded by the customer's equipment when the called party answers.

The measurement of originating call usage over FGA ends when the originating FGA first point of switching receives an on-hook supervisory signal from either the originating end user's end office, indicating the originating end user has disconnected, or the customer's point of termination, which ever is recognized first by the first point of switching.

For terminating calls over FGA, usage measurement begins when the terminating FGA first point of switching receives an off-hook supervisory signal from the terminating end user's end office, indicating the terminating end user has answered. The measurement of terminating call usage over FGA ends when the terminating FGA first point of switching receives an on-hook supervisory signal from either the terminating end user's end office, indicating the terminating end user has disconnected, or the customer's point of termination, whichever is recognized first by the first point of switching

FGA access minutes or fractions thereof, the exact value of the fraction being a function of the switch technology where the measurement is made, are accumulated over the billing period for each line or hunt group, and are then rounded up to the nearest access minute for each line or hunt group.

APPROVED FOR FILING - THE PUBLIC SERVICE COMMISSION OF SOUTH CAROLINA - JULY 15, 2014

Switched Access Service

6.5 Description and Provision of Feature Group A (FGA) (Cont'd)

6.5.4 Measuring Access Minutes (Cont'd)

Assumed minutes are used for FGA services which originate or terminate in end offices not equipped with measurement capabilities and in such cases are the chargeable access minutes.

Where originating and terminating measurement capability does not exist for Feature Group A provided to the first point of switching, the number of access minutes will be assumed as set forth in 17.2.6 following.

Where measurement capability exists for either originating or terminating usage, but not both, on a line arranged for two way calling, the number of access minutes per line per month will be assumed usage, as set forth in 17.2.6 following, or the measured usage, whichever is greater. If the usage in the measured direction exceeds the assumed access minutes per line per month, no usage will be assigned in the unmeasured direction. If the measured usage is less than the assumed access minutes per line per month, the usage in the unmeasured direction will be the assumed usage, as set forth in 17.2.6 following, for that unmeasured direction except that the total of measured and assumed minutes in such instances will not exceed the total assumed usage designated for two way calling set forth in 17.2.6 following. If the total exceeds the assumed minutes set forth in 17.2.6 following, the assigned minutes shall be reduced so that the total of measured and unmeasured minutes equals the assumed minutes for two way calling set forth in 17.2.6 following.

Additionally, when the line is arranged for one way calling and there is no measurement capability for that direction, assumed originating access minutes, as set forth in 17.2.6(B) following, will be assigned for originating calling only lines and assumed terminating access minutes, as set forth in 17.2.6(C) following, will be assigned for terminating calling only lines.

APPROVED FOR FILING - THE PUBLIC SERVICE COMMISSION OF SOUTH CAROLINA - JULY 15, 2014

Switched Access Service

6.5 Description and Provision of Feature Group A (FGA) (Cont'd)

6.5.4 Measuring Access Minutes (Cont'd)

The following matrix illustrates the application of assumed access minutes for FGA as set forth in 17.2.6(A), (B) and (C) following.

Service Ordered As	Can Measure Originating	Can't Measure Originating	Can Measure Terminating	Can't Measure Terminating
Originating Only	Actual	1,510	N/A	N/A
Terminating Only	N/A	N/A	Actual	2,685
Both Originating and Terminating Actual (originating measurement greater than 4195)	N/A	N/A	0	
Both Originating and Terminating Actual (originating measurement equal or less than 4195)	N/A	N/A	0 to 2685*	
Both Originating and Terminating N/A (terminating measurement greater than 4195)	0	Actual	N/A	
Both Originating and Terminating N/A (terminating measurement equal or less than 4195)	0 to 1510*	Actual	N/A	

* Sum of actual and assumed cannot exceed 4195. Reduce assumed minutes of use if necessary.

APPROVED FOR FILING - THE PUBLIC SERVICE COMMISSION OF SOUTH CAROLINA - JULY 15, 2014

Switched Access Service

6.5 Description and Provision of Feature Group A (FGA) (Cont'd)

6.5.4 Measuring Access Minutes (Cont'd)

Notwithstanding the preceding, when Feature Group A is used for the provision of WATS-type service where measurement capability exists at the WATS Serving Office but not at the Feature Group A first point of switching, the measured WATS-type originating and/or terminating minutes of use shall be separately summed and compared to their respective total assumed originating and/or terminating minutes of use. The number of access minutes per line per month will be the assumed or the measured usage, whichever is greater.

6.5.5 Testing Capabilities

FGA is provided, in the terminating direction where equipment is available, with seven digit access to balance (100 type) test line and milliwatt (102 type) test line. In addition to the tests described in 6.2.4 preceding which are included with the installation of service (Acceptance Testing) and as ongoing routine testing, Additional Cooperative Acceptance Testing and Additional Manual Testing are available as set forth in 13.3.1 following.

APPROVED FOR FILING - THE PUBLIC SERVICE COMMISSION OF SOUTH CAROLINA - JULY 15, 2014

Switched Access Service

6.6 Description and Provision of Feature Group B (FGB)

6.6.1 Description

(A) FGB Access, which is available to all customers, provides trunk side access to Telephone Company end office switches with an associated uniform 950-XXXX access code. FGB trunk side access is provided for the customer's use in originating communications from and terminating communications to an Interexchange Carrier's Intrastate Service or a customer provided intrastate communications capability. The customer must specify the Interexchange Carrier to which the FGB service is connected or, in the alternative, specify the means by which the FGB access communications is transported to another LATA. Special Access Services utilized for connection with FGB at Telephone Company designated WATS Serving Offices as set forth in Section 7. following may be ordered separately by a customer other than the customer which orders the FGB Switched Access Service for the provision of WATS-type services. Special Access Services are ordered as set forth in 5.2 preceding.

(B) FGB, when directly routed to an end office (i.e., provided without the use of an access tandem switch), is provided at appropriately equipped Telephone Company electronic end office switches. When provided via Telephone Company designated electronic access tandem switches, FGB switching is provided at Telephone Company electronic and electromechanical end office switches.

APPROVED FOR FILING - THE PUBLIC SERVICE COMMISSION OF SOUTH CAROLINA - JULY 15, 2014

Switched Access Service

6.6 Description and Provision of Feature Group B (FGB) (Cont'd)

6.6.1 Description (Cont'd)

(C) FGB is provided as trunk side switching through the use of end office or access tandem switch trunk equipment. The switch trunk equipment is provided with wink start start-pulsing signals and answer and disconnect supervisory signaling.

(D) FGB switching is provided with multifrequency address signaling in both the originating and terminating directions. Except for FGB switching provided with the automatic number identification (ANI) or rotary dial station signaling arrangements as set forth respectively in 6.10.1(F) and 6.10.2(A) following, any other address signaling in the originating direction, if required by the customer, must be provided by the customer's end user using inband tone signaling techniques. Such inband tone address signals will not be regenerated by the Telephone Company and will be subject to the ordinary transmission capabilities of the Local Transport provided.

(E) The access code for FGB switching is a uniform access code. The form of the uniform access code is 950-XXXX. A uniform access code will be assigned to the customer for the customer's domestic communications and another will be assigned to the customer for its international communications, if required. These access codes will be the assigned access numbers of all FGB switched access service provided to the customer by the Telephone Company.

(F) The Telephone Company will establish a trunk group or groups for the customer at end office switches or access tandem switches where FGB switching is ordered. When required by technical limitations, a separate trunk group will be established for each type of FGB switching arrangement provided. Different types of FGB or other switching arrangements may be combined in a single trunk group at the option of the Telephone Company.

APPROVED FOR FILING - THE PUBLIC SERVICE COMMISSION OF SOUTH CAROLINA - JULY 15, 2014

Switched Access Service

6.6 Description and Provision of Feature Group B (FGB) (Cont'd)

6.6.1 Description (Cont'd)

(G) FGB switching, when used in the terminating direction, may be used to access valid NXXs in the LATA, time or weather announcement services of the Telephone Company, community information services of an information service provider and other customers' services (by dialing the appropriate digits). When directly routed to an end office, only those valid NXX codes served by that end office may be accessed. When routed through an access tandem, only those valid NXX codes served by end offices subtending the access tandem may be accessed.

The customer will also be billed additional non-access charges for calls to certain community information services for which rates are applicable under Telephone Company exchange service tariffs, e.g., 976 (DIAL-IT) Network Service. Additionally, non-access charges will also be billed for calls from a FGB trunk to another customer's service in accordance with that customer's applicable service rates when the Telephone Company performs the billing function for that customer.

Calls in the terminating direction will not be completed to 950-XXXX access codes, local operator assistance (0- and 0+), Directory Assistance (411 and 555- 1212), service codes 611 and 911 or 101XXXX access codes. Calls will be completed to Directory Assistance (NPA-555-1212 or 555-1212) when FGB switching is combined with Directory Assistance (DA) switching. The combination of FGB Switched Access Service with DA service is provided as set forth in Section 9. following. FGB may not be switched, in the terminating direction, to Switched Access Service Feature Groups B, C and D.

APPROVED FOR FILING - THE PUBLIC SERVICE COMMISSION OF SOUTH CAROLINA - JULY 15, 2014

Switched Access Service

6.6 Description and Provision of Feature Group B (FGB) (Cont'd)

6.6.1 Description (Cont'd)

(H) When all FGB switching arrangements are discontinued at an end office and/or in a LATA, an intercept announcement is provided. This arrangement provides, for a limited period of time, an announcement that the service associated with the number dialed has been disconnected.

(I) A customer who has FGB access may elect to have their FGB traffic routed over FGD trunks at the end office or access tandem. If the customer elects this option the FGB traffic will be rated at FGD rates.

(J) Reserved For Future Use

(K) For FGB switched access service to a Wireless Switching Center (WSC) directly interconnected to a Telephone Company access tandem office, the customer will be billed only the Local Transport premium rate element for the FGB usage. The mileage used to determine the monthly rate for the local transport rate element is as set forth in 6.4.6(G) preceding.

APPROVED FOR FILING - THE PUBLIC SERVICE COMMISSION OF SOUTH CAROLINA - JULY 15, 2014

Switched Access Service

6.6 Description and Provision of Feature Group B (FGB) (Cont'd)

6.6.2 Optional Features

Following are descriptions of the various nonchargeable optional features that are available in lieu of, or in addition to, the standard features provided with Feature Group B. They are set forth in (A), (B) and (C) following and are provided as Common Switching, Transport Termination and Local Transport options. Additionally, other optional features provided in local tariffs are set forth in (D) following.

(A) Common Switching Optional Features

Descriptions of the common switching optional features are set forth in 6.10 following.

(1) Automatic Number Identification (ANI)

(2) Up to 7 Digit Outpulsing of Access Digits to Customer

(3) Band Advance Arrangement for Use with Special Access Service utilized in the provision of WATS or WATS-type Services

(4) Hunt Group Arrangement for Use with Special Access Service utilized in the provision of WATS or WATS- type Services

(5) Uniform Call Distribution Arrangement for Use with Special Access Service utilized in the provision of WATS or WATS-type Services

(6) Nonhunting Number Associated with Hunt Group Arrangement or Uniform Call Distribution Arrangement for Use with Special Access Service utilized in the provision of WATS or WATS-type Services

APPROVED FOR FILING - THE PUBLIC SERVICE COMMISSION OF SOUTH CAROLINA - JULY 15, 2014

Switched Access Service

6.6 Description and Provision of Feature Group B (FGB) (Cont'd)

6.6.2 Optional Features (Cont'd)

(B) Transport Termination Options

(1) Rotary Dial Station Signaling

(C) Local Transport Options

(1) Customer Specification of Local Transport Termination

(2) Optional Supervisory Signaling

(3) Customer Specified Entry Switch Receive Level

Inasmuch as these options concern transmission levels and signaling they are set forth in 15.1.1 following.

(D) Optional Features Provided In Local Tariffs

Another feature, Bill Number Screening, which may be available in connection with FGB, is provided under the Telephone Company's local and/or general exchange service tariffs.

APPROVED FOR FILING - THE PUBLIC SERVICE COMMISSION OF SOUTH CAROLINA - JULY 15, 2014

Switched Access Service

6.6 Description and Provision of Feature Group B (FGB) (Cont'd)

6.6.3 Design and Traffic Routing

For Feature Group B, the trunk directionality and traffic routing of the Switched Access Service between the customer designated premises and the entry switch are determined by the customer's order for service; except the Telephone Company will designate the first point(s) of switching and routing to be used where equal access is provided through a centralized equal access arrangement. Those Telephone Company offices providing equal access through centralized arrangements are identified in NATIONAL EXCHANGE CARRIER ASSOCIATION, INC. TARIFF F.C.C. NO. 4. Additionally, the customer may order the optional feature Customer Specification of Local Transport Termination as set forth in 15.1.1 following.

6.6.4 Measuring Access Minutes

Customer traffic to end offices will be measured (i.e., recorded) or assumed by the Telephone Company at end office switches or access tandem switches. Originating and terminating calls will be measured (i.e., recorded) or assumed by the Telephone Company to determine the basis for computing chargeable access minutes. In the event the customer message detail is not available because the Telephone Company lost or damaged tapes or incurred recording system outages, the Telephone Company will estimate the volume of lost customer access minutes of use based on previously known values.

For both originating and terminating calls over FGB the measured minutes are the chargeable access minutes.

For originating calls over FGB, usage measurement begins when the originating FGB first point of switching receives answer supervision forwarded from the customer's point of termination, indicating the customer's equipment has answered.

APPROVED FOR FILING - THE PUBLIC SERVICE COMMISSION OF SOUTH CAROLINA - JULY 15, 2014

Switched Access Service

6.6 Description and Provision of Feature Group B (FGB) (Cont'd)

6.6.4 Measuring Access Minutes (Cont'd)

The measurement of originating call usage over FGB ends when the originating FGB first point of switching receives disconnect supervision from either the originating end user's end office, indicating the originating end user has disconnected, or the customer's point of termination, whichever is recognized first by the first point of switching.

For terminating calls over FGB, usage measurement begins when the terminating FGB first point of switching receives answer supervision from the terminating end user's end office, indicating the terminating end user has answered.

The measurement of terminating call usage over FGB ends when the terminating FGB first point of switching receives disconnect supervision from either the terminating end user's end office, indicating the terminating end user has disconnected, or the customer's point of termination, whichever is recognized first by the first point of switching.

FGB access minutes of fractions thereof, the exact value of the fraction being a function of the switch technology where the measurement is made, are accumulated over the billing period for each end office, and are then rounded up to the nearest access minute for each end office.

Assumed minutes are used for FGB services which originate or terminate in end offices not equipped with measurement capabilities and in such cases are the chargeable access minutes.

APPROVED FOR FILING - THE PUBLIC SERVICE COMMISSION OF SOUTH CAROLINA - JULY 15, 2014

Switched Access Service

6.6 Description and Provision of Feature Group B (FGB) (Cont'd)

6.6.4 Measuring Access Minutes (Cont'd)

Where originating and terminating measurement capability does not exist for Feature Group B provided to the first point of switching, the number of access minutes will be assumed, as set forth in 17.2.6(D) following, when the trunk is arranged for two way calling.

Where measurement capability exists for either originating or terminating usage, but not both, on a trunk arranged for two way calling, the number of access minutes per trunk per month will be an assumed usage, as set forth in 17.2.6(D) following, or the measured usage, whichever is greater. If the usage in the measured direction exceeds the assumed access minutes per trunk per month, no usage will be assigned in the unmeasured direction. If the measured usage is less than the assumed access minutes per trunk per month, the usage in the unmeasured direction will be the assumed usage, as set forth in 17.2.6 following, for that unmeasured direction except that the total of measured and assumed minutes in such instances will not exceed the total assumed usage designated for two way calling set forth in 17.2.6(D) following. If the total exceeds the assumed minutes set forth in 17.2.6 following, the assigned minutes shall be reduced so that the total of measured and unmeasured minutes equals the assumed minutes for two way calling set forth in 17.2.6(D) following.

Additionally, when the trunk is arranged for one way calling and there is no measurement capability for that direction, assumed originating access minutes, as set forth in 17.2.6(E) following, will be assigned for originating calling only lines and assumed terminating access minutes, as set forth in 17.2.6(F) following, will be assigned for terminating calling only lines.

APPROVED FOR FILING - THE PUBLIC SERVICE COMMISSION OF SOUTH CAROLINA - JULY 15, 2014

Switched Access Service

6.6 Description and Provision of Feature Group B (FGB) (Cont'd)

6.6.4 Measuring Access Minutes (Cont'd)

The following matrix illustrates the application of assumed access minutes for FGB as set forth in 17.2.6(D), (E) and (F) following.

Service Ordered As	Can Measure Originating	Can't Measure Originating	Can Measure Terminating	Can't Measure Terminating
Originating Only	Actual	3,132	N/A	N/A
Terminating Only	N/A	N/A	Actual	5,568
Both Originating and Terminating Actual (originating measurement greater than 8700)	N/A	N/A	0	
Both Originating and Terminating Actual (originating measurement equal or less than 8700)	N/A	N/A	0 to 5568*	
Both Originating and Terminating N/A (terminating measurement greater than 8700)	0	Actual	N/A	
Both Originating and Terminating N/A (terminating measurement equal or less than 8700)	0 to 3132*	Actual	N/A	

* Sum of actual and assumed cannot exceed 8700. Reduce assumed minutes of use if necessary.

APPROVED FOR FILING - THE PUBLIC SERVICE COMMISSION OF SOUTH CAROLINA - JULY 15, 2014

Switched Access Service

6.6 Description and Provision of Feature Group B (FGB) (Cont'd)

6.6.4 Measuring Access Minutes (Cont'd)

Notwithstanding the preceding, when Feature Group B is used for the provision of WATS or WATS-type service where measurement capacity exists at the WATS Serving Office but not at the Feature Group B first point of switching, the measured WATS or WATS-type originating and/or terminating minutes of use shall be separately summed and compared to their respective total assumed originating and/or terminating minutes of use. The number of minutes per trunk per month will be the assumed or the measured usage, whichever is greater.

When Feature Group B is ordered at an access tandem and end office specific usage measurement is not available, the actual or assumed originating and/or terminating minutes of use as determined by the exchange carrier providing the access tandem will be apportioned among all subtending end offices. For each end office, such apportionment shall be based on the ratio of the total number of subscriber lines in each end office subtending the access tandem to the total number of subscriber lines associated with all end offices subtending the access tandem. For purposes of administering this regulation, subscriber lines are defined as exchange service lines, Centrex lines and Centrex-type lines provided by the telephone companies under local and/or general exchange service tariffs. The resulting ratio for each end office is then applied to the total access area originating and/or terminating minutes of use to determine originating and/or terminating minutes of use to be assigned for billing purposes to each subtending end office in the access area.

The ratio used to calculated the access minutes will be determined by the Telephone Company and provided to the customer upon his request within 15 days of the receipt of such a request.

APPROVED FOR FILING - THE PUBLIC SERVICE COMMISSION OF SOUTH CAROLINA - JULY 15, 2014

Switched Access Service

6.6 Description and Provision of Feature Group B (FGB) (Cont'd)

6.6.5 Testing Capabilities

FGB is provided, in the terminating direction where equipment is available, with seven digit access to balance (100 type) test line, milliwatt (102 type) test line, nonsynchronous or synchronous test line, automatic transmission measuring (105 type) test line, data transmission (107 type) test line, loop around test line, short circuit test line and open circuit test line. In addition to the tests described in 6.2.4 preceding which are included with the installation of service (Acceptance Testing) and as ongoing routine testing, additional Cooperative Acceptance Testing, Additional Automatic Testing, and Additional Manual Testing are available as set forth in 13.3.1 following.

APPROVED FOR FILING - THE PUBLIC SERVICE COMMISSION OF SOUTH CAROLINA - JULY 15, 2014

Switched Access Service

6.7 Description and Provision of Feature Group C (FGC)

6.7.1 Description

(A) FGC Access provides trunk side access to Telephone Company end office switches for the customer's use in originating and terminating communications. Originating and terminating FGC Access is available to providers of MTS and WATS. Originating FGC Access is available to all customers when used to provide the Interim NXX Translation optional feature or 800/888/877 Data Base service. Terminating FGC Access is available to all customers other than providers of MTS and WATS when such access is used in conjunction with the provision of the Interim NXX Translation Optional Feature or 800/888/877 Data Base service, but only for purposes of testing. Existing FGC Access will be converted to Feature Group D Access when Feature Group D Access becomes available in an end office. Special Access Services utilized for connection with FGC at Telephone Company designated WATS Serving Offices as set forth in Section 7. following may be ordered separately by a customer other than the customer which orders the FGC Switched Access Service (i.e., a provider of MTS and WATS) for the provision of WATS Services. Special Access Services are ordered as set forth in 5.2 preceding.

APPROVED FOR FILING - THE PUBLIC SERVICE COMMISSION OF SOUTH CAROLINA - JULY 15, 2014

Switched Access Service

6.7 Description and Provision of Feature Group C (FGC) (Cont'd)

6.7.1 Description (Cont'd)

(B) Feature Group C switching is provided at all end office switches unless Feature Group D end office switching is provided in the same office. When FGD switching is available, FGC switching will not be provided. FGC is provided at Telephone Company end office switches on a direct trunk basis or via Telephone Company designated access tandem switches. Feature Group C switching is furnished to providers of MTS and WATS. Additionally, originating Feature Group C switching is available to all customers when used to provide the Interim NXX Translation optional feature or 800/888/877 Data Base service. Terminating Feature Group C switching is available to all customers who are not MTS and WATS providers only when such terminating access is for purposes of testing Feature Group C facilities provided in conjunction with the Interim NXX Translation optional feature or 800/888/877 Data Base Service.

(C) FGC is provided as trunk side switching through the use of end office or access tandem switch trunk equipment. The switch trunk equipment is provided with answer and disconnect supervisory signaling. Wink start start-pulsing signals are provided in all offices where available. In those offices where wink start start-pulsing signals are not available, delay dial start-pulsing signals will be provided, unless immediate dial pulse signaling is provided, in which case no start-pulsing signals are provided.

APPROVED FOR FILING - THE PUBLIC SERVICE COMMISSION OF SOUTH CAROLINA - JULY 15, 2014

Switched Access Service

6.7 Description and Provision of Feature Group C (FGC) (Cont'd)

6.7.1 Description (Cont'd)

(D) FGC is provided with multifrequency address signaling except in certain electromechanical end office switches where multifrequency signaling is not available. In such switches, the address signaling will be dial pulse or immediate dial pulse signaling, whichever is available. Up to 12 digits of the called party number dialed by the customer's end user using dual tone multifrequency or dial pulse address signals will be provided by Telephone Company equipment to the customer's premises where the Switched Access Service terminates. Such called party number signals will be subject to the ordinary transmission capabilities of the Local Transport provided.

(E) No access code is required for FGC switching. The telephone number dialed by the customer's end user shall be a seven or ten digit number for calls in the North American Numbering Plan (NANP). For international calls outside the NANP, a seven to twelve digit number may be dialed. The form of the numbers dialed by the customer's end user is NXX-XXXX, 0 or 1 + NXX-XXXX, NPA + NXX-XXXX, 0 or 1 + NPA + NXX-XXXX, and, when the end office is equipped for International Direct Distance Dialing (IDDD), 01 + CC + NN or 011 + CC + NN.

APPROVED FOR FILING - THE PUBLIC SERVICE COMMISSION OF SOUTH CAROLINA - JULY 15, 2014

Switched Access Service

6.7 Description and Provision of Feature Group C (FGC) (Cont'd)

6.7.1 Description (Cont'd)

(F) FGC switching, when used in the terminating direction, may be used to access valid NXXs in the LATA, time or weather announcement services of the Telephone Company, community information services of an information provider, and other customers' services (by dialing the appropriate codes) when the services can be reached using valid NXX codes. When directly routed to an end office, only those valid NXX codes served by that office may be accessed. When routed through an access tandem, only those valid NXX codes served by offices subtending the access tandem may be accessed. Where measurement capabilities exist, the customer will also be billed additional non-access charges for calls to certain community information services, for which rates are applicable under Telephone Company exchange service tariffs, e.g., 976 (DIAL-IT) Network Services. Additionally, non-access charges will also be billed for calls from a FGC trunk to another customer's service in accordance with that customer's applicable service rates when the Telephone Company performs the billing function for that customer. Calls in the terminating direction will not be completed to 950-XXXX access codes, local operator assistance (0- and 0+), Directory Assistance (411 and 555- 1212), service codes 611 and 911 and 101XXXX access codes. Calls will be completed to Directory Assistance (NPA-555-1212 or 555-1212) when FGC switching is combined with Directory Assistance switching. The combination of FGC Switched Access Service with DA Service is provided as set forth in Section 9. following. FGC may not be switched, in the terminating direction, to Switched Access Service Feature Groups B, C or D.

APPROVED FOR FILING - THE PUBLIC SERVICE COMMISSION OF SOUTH CAROLINA - JULY 15, 2014

Switched Access Service

6.7 Description and Provision of Feature Group C (FGC) (Cont'd)

6.7.1 Description (Cont'd)

(G) The Telephone Company will establish a trunk group or groups for the customer at end office switches or access tandem switches where FGC switching is provided. When required by technical limitations, a separate trunk group will be established for each type of FGC switching arrangement provided. Different types of FGC or other switching arrangements may be combined in a single trunk group at the option of the Telephone Company.

(H) Unless prohibited by technical limitations the providers of MTS and WATS may, at their option, combine Interim NXX Translation and/or 800/888/877 Data Base traffic in the same trunk group arrangement with their non-Interim NXX Translation traffic. When required by technical considerations, or when provided to a customer other than the provider of MTS and WATS, or at the request of the customer (i.e., provider of MTS and WATS),a separate trunk group will be established for Interim NXX Translation traffic and/or 800/888/877 Data Base.

(I) Reserved For Future Use

(J) FGC switching is provided with multifrequency address signaling or out of band SS7 signaling where technically feasible. With multifrequency address signaling and SS7 signaling, up to 12 digits of the called party number dialed by the customer's end user dual tone multifrequency or dial pulse address signals will be provided by Telephone Company equipment to the customer's premises where the Switched Access Service terminates. Such address signals will be subject to the ordinary transmission capabilities of the Local Transport provided.

APPROVED FOR FILING - THE PUBLIC SERVICE COMMISSION OF SOUTH CAROLINA - JULY 15, 2014

Switched Access Service

6.7 Description and Provision of Feature Group C (FGC) (Cont'd)

6.7.2 Optional Features

Following are descriptions of the various nonchargeable and chargeable optional features that are available in lieu of, or in addition to, the standard features provided with Feature Group C. Nonchargeable optional features are provided as Common Switching, Transport Termination and Local Transport options as set forth in (A) through (C) following. Chargeable optional features are set forth in (D) following.

(A) Common Switching Options

Descriptions of the common switching optional features are set forth in 6.10 following.

(1) Automatic Number Identification (ANI)

(2) Signaling Options

(a) Delay Dial Start-Pulsing Signaling

(b) Immediate Dial Pulse Address Signaling

(c) Dial Pulse Address Signaling

(3) Service Class Routing

(4) Alternate Traffic Routing

(5) Trunk Access Limitation

(6) Band Advance Arrangement Associated with Special Access Service Utilized in the Provision of WATS Service.

(7) End Office End User Line Service Screening for Use with Special Access Service Utilized in the Provision of WATS Service

(8) Hunt Group Arrangement for Use with Special Access Service Utilized in the Provision of WATS Service

APPROVED FOR FILING - THE PUBLIC SERVICE COMMISSION OF SOUTH CAROLINA - JULY 15, 2014

Switched Access Service

6.7 Description and Provision of Feature Group C (FGC) (Cont'd)

6.7.2 Optional Feature (Cont'd)

(A) Common Switching Options (Cont'd)

(9) Uniform Call Distribution Arrangement for Use with Special Access Service Utilized in the Provision of WATS Service

(10) Nonhunting Number Associated with a Hunt Group Arrangement or Uniform Call Distribution Arrangement for Use with Special Access Service Utilized in the Provision of WATS Services

(11) Digital Switched 56 Service

(B) Transport Termination Options

(1) Operator Trunk - Coin, Non-Coin or Combined Coin and Non-Coin.

The Operator Trunk option is set forth in 6.10.2(B) following.

(C) Local Transport Options

(1) Supervisory Signaling

The Supervisory Signaling optional feature, due to its technical nature, is set forth in 15.1.1 following.

(2) Signaling System 7 (SS7)

The SS7 optional feature allows the customer to send and receive signals for out of band call set up and is available with Feature Group C. This option requires the establishment of a signaling connection between the customer's designated premises/Signaling Point of Interface (SPOI) and a Telephone Company Signaling Transfer Point (STP).

SS7 is provided in both the originating and terminating direction on FGC and each signaling connection is provisioned for two way SS7 signaling information.

APPROVED FOR FILING - THE PUBLIC SERVICE COMMISSION OF SOUTH CAROLINA - JULY 15, 2014

Switched Access Service

6.7 Description and Provision of Feature Group C (FGC) (Cont'd)

6.7.2 Optional Feature (Cont'd)

(C) Local Transport Options (Cont'd)

(2) Signaling System 7 (SS7) (Cont'd)

The SS7 optional feature is only available where designated in Tariff F.C.C. No. 4 to providers of MTS and WATS for all traffic and to all other customers for originating calls to 800/888/877 numbers.

(3) Multifrequency Address Signaling

(4) Calling Party Number (CPN)

(5) Charge Number Parameter (CNP)

(D) Chargeable Optional Features

(1) Interim NXX Translation

The Interim NXX Translation Optional Feature is set forth in 6.10.3(A) following.

APPROVED FOR FILING - THE PUBLIC SERVICE COMMISSION OF SOUTH CAROLINA - JULY 15, 2014

Switched Access Service

6.7 Description and Provision of Feature Group C (FGC) (Cont'd)

6.7.3 Design and Traffic Routing

For Feature Group C, the Telephone Company shall design and determine the routing of Switched Access Service. Additionally, for Tandem Switching Transport, the Telephone Company will design and determine the routing from the first point of switching to the end office. The Telephone Company shall also decide if capacity is to be provided by originating only, terminating only, or two-way trunk groups. Finally, the Telephone Company will decide whether trunk side access will be provided through the use of two-wire or four-wire trunk terminating equipment.

Selection of facilities and equipment and traffic routing of the service are based on standard engineering methods, available facilities and equipment, and actual traffic patterns.

APPROVED FOR FILING - THE PUBLIC SERVICE COMMISSION OF SOUTH CAROLINA - JULY 15, 2014

Switched Access Service

6.7 Description and Provision of Feature Group C (FGC) (Cont'd)

6.7.4 Measuring Access Minutes

Customer traffic to end offices will be measured (i.e., recorded) by the Telephone Company at end office switches or access tandem switches. Originating and terminating calls will be measured or imputed by the Telephone Company to determine the basis for computing chargeable access minutes. In the event the customer message detail is not available because the Telephone Company lost or damaged tapes or incurred recording system outages, the Telephone Company will estimate the volume of lost customer access minutes of use based on previously known values.

For terminating calls over FGC when measurement capability exists, the measured minutes are the chargeable access minutes. For originating calls over FGC, chargeable originating access are derived from recorded minutes in the following manner:

Step 1: Obtain recorded originating minutes and messages from the appropriate recording data.

Step 2: Obtain the total attempts by dividing the originating measured messages by the completion ratio. Completion ratios (CR) are obtained separately for the major call categories such as DDD, operator, 800, 888, 877, 900, directory assistance and international from a sample study which analyzes the ultimate completion status of the total attempts which receive acknowledgment from the customer. That is, Measured Messages divided by Completion Ratio equals Total Attempts.

APPROVED FOR FILING - THE PUBLIC SERVICE COMMISSION OF SOUTH CAROLINA - JULY 15, 2014

Switched Access Service

6.7 Description and Provision of Feature Group C (FGC) (Cont'd)

6.7.4 Measuring Access Minutes (Cont'd)

Step 3: Obtain the total non-conversation time additive (NCTA) by multiplying the total attempts (obtained in Step 2) by the NCTA per attempt ratio. The NCTA per attempt ratio is obtained from the sample study identified in Step 2 by measuring the non-conversation time associated with both completed and incompleted attempts. The total NCTA is the time on a completed attempt from customer acknowledgment of receipt of call to called party answer (set up and ringing) plus the time on an incompleted attempt from customer acknowledgment of call until the access tandem or end office receives a disconnect signal (ring - no answer, busy or network blockage). That is, Total Attempts times Non-Conversation Time per Attempt Ratio equals Total NCTA.

Step 4: Obtain total chargeable originating access minutes by adding the total NCTA (obtained in Step 3) to the recorded originating measured minutes (obtained in Step 1). That is, Measured Minutes plus NCTA equals Chargeable Originating Access Minutes.

Following is an example which illustrates how the chargeable originating access minutes are derived from the measured originating minutes using this formula.

Where:
Measured Minutes (M. Min.) = 7,000
Measured Messages (M. Mes.) = 1,000
Completion Ratio (CR) = .75
NCTA per Attempt = .4

(1) Total Attempts = $\frac{1,000(\text{M. Mes.})}{.75\ (\text{CR})}$ = 1,333.3

(2) Total NCTA = .4 (NCTA per Attempt) x 1,333.33 = 533.33

(3) Total Chargeable Originating Access Minutes =
7,000(M. Min) + 533.33(NCTA) = 7,533.33

FGC access minutes or fractions thereof, the exact value of the fraction being a function of the switch technology where the measurement is made, are accumulated over the billing period for each end office, and are then rounded up to the nearest access minute for each end office.

APPROVED FOR FILING - THE PUBLIC SERVICE COMMISSION OF SOUTH CAROLINA - JULY 15, 2014

Switched Access Service

6.7 Description and Provision of Feature Group C (FGC) (Cont'd)

6.7.4 Measuring Access Minutes (Cont'd)

Originating Usage

For originating calls over FGC, usage measurement begins when the originating FGC first point of switching receives answer supervision from the customer's point of termination, indicating the called party has answered.

For originating calls over FGC provided with Signaling System 7 (SS7) Signaling when the FGC end office is not routed through an access tandem for connection to the customer, usage measurement begins when the SS7 Initial Address Message is sent from the Service Switching Point (SSP) to the Signal Transfer Point (STP).

For originating calls over FGC provided with Signaling System 7 (SS7) Signaling when the FGC end office is routed through a tandem for connection to the customer, usage measurement begins when the FGC end office receives the SS7 Exit Message from the tandem.

The measurement of originating call usage over FGC provided with Multi-Frequency Signaling ends when the originating FGC first point of switching receives disconnect supervision from either the originating end user's end office, indicating the originating end user has disconnected, or the customer's point of termination, whichever is recognized first by the first point of switching.

The measurement of originating call usage over FGC provided with SS7 Signaling ends when the originating FGC end office receives an SS7 Release Message indicating either the originating or terminating end user has disconnected.

Terminating Usage

For terminating calls over FGC the chargeable access minutes are either measured or derived. For terminating calls over FGC where measurement capability does not exist, terminating FGC usage is derived from originating usage, excluding usage from calls to closed end services or Directory Assistance Services.

APPROVED FOR FILING - THE PUBLIC SERVICE COMMISSION OF SOUTH CAROLINA - JULY 15, 2014

Switched Access Service

6.7 Description and Provision of Feature Group C (FGC) (Cont'd)

6.7.4 Measuring Access Minutes (Cont'd)

Terminating Usage (Cont'd)

For terminating calls over FGC where measurement capability exists, the measurement of chargeable access minutes begins when the terminating FGC first point of switching receives answer supervision from the terminating end user's end office, indicating the terminating end user has answered. This measurement ends when the terminating FGC first point of switching receives an on-hook supervisory signal from the terminating end user's end office, indicating the terminating end user has disconnected, or the customer's point of termination, whichever is recognized first by the first point of switching.

For terminating calls over FGC with SS7 signaling, usage measurement begins when the terminating recording switch receives answer supervision from the terminating end user. The Telephone Company switch receives answer supervision and sends the indication to the customer in the form of an answer message. The measurement of terminating FGC call usage ends when the entry switch receives or sends a Release Message, whichever occurs first.

APPROVED FOR FILING - THE PUBLIC SERVICE COMMISSION OF SOUTH CAROLINA - JULY 15, 2014

Switched Access Service

6.7 Description and Provision of Feature Group C (FGC) (Cont'd)

6.7.5 Design Blocking Probability

The Telephone Company will design the facilities used in the provision of Switched Access Service FGC to meet the blocking probability criteria as set forth in (A) and (D) following.

(A) For Feature Group C, the design blocking objective will be no greater than one percent (.01) between the point of termination at the customer's designated premises and the first point of switching when traffic is directly routed without an alternate route. Standard traffic engineering methods will be used by the Telephone Company to determine the number of transmission paths required to achieve this level of blocking.

(B) The Telephone Company will perform routine measurement functions to assure that an adequate number of transmission paths are in service. The Telephone Company will recommend that additional capacity (i.e., busy hour minutes of capacity or trunks) be ordered by the customer when additional paths are required to reduce the measured blocking to the designed blocking level. For the capacity ordered, the design blocking objective is assumed to have been met if the routine measurements show that the measured blocking does not exceed the threshold listed in the following tables.

APPROVED FOR FILING - THE PUBLIC SERVICE COMMISSION OF SOUTH CAROLINA - JULY 15, 2014

Switched Access Service

6.7 Description and Provision of Feature Group C (FGC) (Cont'd)

6.7.5 Design Blocking Probability (Cont'd)

(B) (Cont'd)

(1) For transmission paths carrying only first routed traffic direct between an end office and customer's designated premises without an alternate route, and for paths carrying only overflow traffic, the measured blocking thresholds are as follows:

Number of Transmission Paths Per Trunk Group	Transmission blocking thresholds in time consistent busy hour for the number of measurements taken between 8:00 a.m. and 11:00 p.m. per trunk group			
	15-20 Measurements	11-14 Measurements	7-10 Measurements	3-6 Measurements
2	7.0%	8.0%	9.0%	14.0%
3	5.0%	6.0%	7.0%	9.0%
4	5.0%	6.0%	7.0%	8.0%
5-6	4.0%	5.0%	6.0%	7.0%
7 or more	3.0%	3.5%	4.0%	6.0%

(2) For transmission paths carrying first routed traffic between an end office and customer's premises via an access tandem, the measured blocking thresholds are as follows:

Number of Transmission Paths Per Trunk Group	Transmission blocking thresholds in time consistent busy hour for the number of measurements taken between 8:00 a.m. and 11:00 p.m. per trunk group			
	15-20 Measurements	11-14 Measurements	7-10 Measurements	3-6 Measurements
2	4.5%	5.5%	6.0%	9.5%
3	3.5%	4.0%	4.5%	6.0%
4	3.5%	4.0%	4.5%	5.5%
5-6	2.5%	3.5%	4.0%	4.5%
7 or more	2.0%	2.5%	3.0%	4.0%

APPROVED FOR FILING - THE PUBLIC SERVICE COMMISSION OF SOUTH CAROLINA - JULY 15, 2014

6.7 Description and Provision of Feature Group C (FGC) (Cont'd)

6.7.6 Testing Capabilities

FGC is provided, in the terminating direction where equipment is available, with seven digit access to balance (100 type) test line, milliwatt (102 type) test line, nonsynchronous or synchronous test line, automatic transmission measuring (105 type) test line, data transmission (107 type) test line, loop around test line, short circuit test line and open circuit test line. In addition to the tests described in 6.2.4 preceding which are included with the installation of service (Acceptance Testing) and as ongoing routine testing, Additional Cooperative Acceptance Testing, Additional Automatic Testing, and Additional Manual Testing are available as set forth in 13.3.1 following.

APPROVED FOR FILING - THE PUBLIC SERVICE COMMISSION OF SOUTH CAROLINA - JULY 15, 2014

Switched Access Service

6.8 Description and Provision of Feature Group D (FGD)

6.8.1 Description

(A) FGD Access, which is available to all customers, provides trunk side access to Telephone Company end office switches. Special Access Services utilized for connection with FGD at Telephone Company designated WATS Serving offices as set forth in Section 7. following may be ordered separately by a customer other than the customer which orders the FGD Switched Access Service for the provision of WATS or WATS-type services. Special Access Services are ordered as set forth in 5.2 preceding.

(B) FGD is provided at Telephone Company designated end office switches whether routed directly or via Telephone Company designated electronic access tandem switches. The Telephone Company will designate the first point(s) of switching for FGD services where the Telephone Company elects to provide equal access through a centralized equal access arrangement. Those Telephone Company offices providing equal access through centralized arrangements are identified in NATIONAL EXCHANGE CARRIER ASSOCIATION, INC. TARIFF F.C.C. NO. 4.

(C) FGD is provided as trunk side switching through the use of end office or access tandem switch trunk equipment. The switch trunk equipment is provided with wink start start-pulsing signals and answer and disconnect supervisory signaling.

(D) FGD switching is provided with multifrequency address signaling or out of band SS7 signaling. With multifrequency address signaling and SS7 signaling, up to 12 digits of the called party number dialed by the customer's end user using dual tone multifrequency or dial pulse address signals will be provided by Telephone Company equipment to the customer's premises where the Switched Access Service terminates. Such address signals will be subject to the ordinary transmission capabilities of the Local Transport provided.

APPROVED FOR FILING - THE PUBLIC SERVICE COMMISSION OF SOUTH CAROLINA - JULY 15, 2014

Switched Access Service

6.8 Description and Provision of Feature Group D (FGD) (Cont'd)

6.8.1 Description (Cont'd)

(E) FGD switching, when used in the terminating direction, may be used to access valid NXXs in the LATA, time or weather announcement services of the Telephone Company, community information services of an information service provider, and other customers' services (by dialing the appropriate codes) when such services can be reached using valid NXX codes. When directly routed to an end office, only those valid NXX codes served by that office may be accessed. When routed through an access tandem, only those valid NXX codes served by end offices subtending the access tandem may be accessed. The customer will also be billed additional non-access charges for calls to certain community information services, for which rates are applicable under Telephone Company exchange service tariffs, e.g., 976 (DIAL-IT) Network Service. Additionally, non-access charges will also be billed for calls from a FGD trunk to another customer's service in accordance with that customer's applicable service rates when the Telephone Company performs the billing function for that customer. Calls in the terminating direction will not be completed to 950-XXXX access codes, local operator assistance (0- and 0+), Directory Assistance (411 and 555- 1212), service codes 611 and 911 and 101XXXX access codes. Calls will be completed to Directory Assistance (NPA-555-1212 or 555-1212) when FGD switching is combined with Directory Assistance switching. The combination of FGD Switched Access Service with DA Service is provided as set forth in Section 9. following. FGD may not be switched, in the terminating direction, to Switched Access Service Feature Groups B, C or D.

APPROVED FOR FILING - THE PUBLIC SERVICE COMMISSION OF SOUTH CAROLINA - JULY 15, 2014

Switched Access Service

6.8 Description and Provision of Feature Group D (FGD) (Cont'd)

6.8.1 Description (Cont'd)

(F) The Telephone Company will establish a trunk group or groups for the customer at end office switches or access tandem switches where FGD switching is provided. When required by technical limitations, a separate trunk group will be established for each type of FGD switching arrangement provided. Different types of FGD or other switching arrangements may be combined in a single trunk group at the option of the Telephone Company

(G) The access code for FGD switching is a uniform access code the form 101XXXX. A uniform access code(s) will be the assigned number of all FGD access provided to the customer by the Telephone Company. No access code is required for calls to a customer over FGD Switched Access Service if the end user's telephone exchange service is arranged for presubscription to that customer, as set forth in 13.4 following.

Where no access code is required, the number dialed by the customer's end user shall be a seven or ten digit number for calls in the North American Numbering Plan (NANP). For international calls outside the NANP, a seven to twelve digit number may be dialed. The form of the numbers dialed by the customer's end user is NXX-XXXX, 0 or 1 + NXX-XXXX, NPA + NXX-XXXX, 0 or 1 + NPA + NXX-XXXX, and, when the end office is equipped for International Direct Distance Dialing (IDDD), 01 + CC + NN or 011 + CC + NN.

When the 101XXXX access code is used, FGD switching also provides for dialing the digit 0 for access to the customer's operator, 911 for access to the Telephone Company's emergency reporting service, or the end-of-dialing digit (#) for cut-through access to the customer's premises.

Unless otherwise ordered by the F.C.C., when equal access is provided through a centralized equal access arrangement, the 101XXXX access code may not be available in certain equal access offices. Those offices which provide FGD Switched Access Service without the 101XXXX access code are identified in NATIONAL EXCHANGE CARRIER ASSOCIATION, INC., TARIFF F.C.C. NO. 4.

APPROVED FOR FILING - THE PUBLIC SERVICE COMMISSION OF SOUTH CAROLINA - JULY 15, 2014

Switched Access Service

6.8 Description and Provision of Feature Group D (FGD) (Cont'd)

6.8.1 Description (Cont'd)

(H) FGD switching will be arranged to accept calls from telephone exchange service locations without the need for dialing 101XXXX uniform access code. Each telephone exchange service line may be marked with a code to identify which 101XXXX code its calls will be directed to for interLATA service.

(I) Unless prohibited by technical limitations, the customer's Interim NXX Translation and/or 800/888/877 Data Base traffic may, at the option of the customer, be combined in the same trunk group arrangement with the customer's non-Interim NXX Translation and/or 800/888/877 Data Base traffic. When required by technical limitations, or at the request of the customer, a separate trunk group will be established for Interim NXX Translation and/or 800/888/877 Data Base traffic.

(J) When a customer has had FGB access in an end office and subsequently replaces the FGB access with FGD access, at the mutual agreement of the customer and the Telephone Company, the Telephone Company will direct calls dialed by the customer's end users using the customer's previous FGB access code to the customer's FGD access service. The customer must be prepared to handle normally dialed FGD calls, as well as calls dialed with the FGB access code which requires the customer to receive additional address signaling from the end user. Such calls will be rated as FGD. The Telephone Company may, with 90 days' written notice to the customer, discontinue this arrangement.

(K) For FGD switched access service to a Wireless Switching Center (WSC) directly interconnected to a Telephone Company access tandem office, the customer will be billed only the Local Transport premium rate element for the FGD usage. The mileage used to determine the monthly rate for the local transport rate element is as set forth in 6.4.6(G) preceding.

(L) A customer who has FGB access may elect to have their FGB traffic routed over FGD trunks at the end office or access tandem. If the customer elects this option the FGB traffic will be rated at FGD rates.

APPROVED FOR FILING - THE PUBLIC SERVICE COMMISSION OF SOUTH CAROLINA - JULY 15, 2014

Switched Access Service

6.8 Description and Provision of Feature Group D (FGD) (Cont'd)

6.8.2 Optional Feature

Following are the various nonchargeable and chargeable optional features that are available in lieu of, or in addition to, the standard features provided with Feature Group D. Nonchargeable Optional Features are provided as Common Switching, Transport Termination and Local Transport options as set forth in (A) through (C) following. Chargeable optional features are set forth in (D) following.

(A) Common Switching Options

Descriptions of the common switching optional features are set forth in 6.10 following.

(1) Automatic Number Identification (ANI)

(2) Service Class Routing

(3) Alternate Traffic Routing

(4) Trunk Access Limitation

(5) Call Gapping Arrangement

(6) International Carrier Option

(7) Band Advance Arrangement for Use with Special Access Service Utilized in the Provision of WATS or WATS-Type Services

(8) End Office End User Line Service Screening for Use with Special Access Service Utilized in the Provision of WATS or WATS-Type Services

(9) Hunt Group Arrangement for Use with Special Access Service Utilized in the Provision of WATS or WATS-Type Services

(10) Uniform Call Distribution Arrangement for Use with Special Access Service Utilized in the Provision of WATS or WATS-Type Services

APPROVED FOR FILING - THE PUBLIC SERVICE COMMISSION OF SOUTH CAROLINA - JULY 15, 2014

Switched Access Service

6.8 Description and Provision of Feature Group D (FGD) (Cont'd)

6.8.2 Optional Features (Cont'd)

(A) Common Switching Options

(11) Nonhunting Number Associated with Hunt Group Arrangement or Uniform Call Distribution Arrangement for Use with Special Access Service Utilized in the Provision of WATS or WATS-Type Services

(12) Digital Switched 56 Service

(B) Transport Termination Options

(1) Operator Trunk - Full Feature

The Operator Trunk optional feature is set forth in 6.10.2(C) following.

(C) Local Transport Options

(1) Supervisory Signaling

The Supervisory Signaling optional feature, due to its technical nature, is set forth in 15.1.1 following.

(2) Signaling System 7 (SS7)

The SS7 optional feature allows the customer to send and receive signals for out of band call set up and is available with Feature Group D. This option requires the establishment of a signaling connection between the customer's designated premises/Signaling Point of Interface (SPOI) and a Telephone Company's Signaling Transfer Point (STP).

SS7 is provided in both the originating and terminating direction on FGD and each signaling connection is provisioned for two-way SS7 signaling information.

(3) Multifrequency Address Signaling

(4) Calling Party Number (CPN) Parameter

(5) Charge Number Parameter (CNP)

(6) Carrier Selection Parameter (CSP)

APPROVED FOR FILING - THE PUBLIC SERVICE COMMISSION OF SOUTH CAROLINA - JULY 15, 2014

Switched Access Service

6.8 Description and Provision of Feature Group D (FGD) (Cont'd)

(D) Chargeable Optional Features

(1) Interim NXX Translation

The Interim NXX Translation Optional Feature is set forth in 6.10.3(A) following.

(2) Common Channel Signaling/Signaling System 7 (CCS/SS7) Network Connection Service (CCSNC)

The CCSNC Optional Feature is provided as set forth in 6.10.3 following.

(3) Flexible Automatic Number Identification (Flex ANI)

The Flex ANI Optional Feature is provided as set forth in 6.10.3 following.

6.8.3 Design and Traffic Routing

For Feature Group D, the Telephone Company shall design and determine the routing of Tandem Switched Transport Access, including the selection of the first point of switching and the selection of facilities from the interface to any switching point and to the end offices where busy hour minutes of capacity are ordered. The Telephone Company shall also decide if capacity is to be provided by originating only, terminating only, or two-way trunk groups. Finally, the Telephone Company will decide whether trunk side access will be provided through the use of two-wire or four-wire trunk terminating equipment.

For Feature Group D Direct Trunked Transport service, the Telephone Company will determine the routing of Switched Access Service from the point of interface to the first point of switching or, if the customer specifies one or more hub locations for multiplexing, from the point of interface to the hub location, from one hub location to another hub location, and/or from a hub location to the first point of switching.

Selection of facilities and equipment and traffic routing of the service is based on standard engineering methods, available facilities and equipment, and actual traffic patterns. If the customer desires routing or directionality different from that determined by the Telephone Company, the Telephone Company will work cooperatively with the customer in determining (1) whether the service is to be routed directly to an end office or through an access tandem switch and (2) the directionality of the service; except the Telephone Company will designate the first point(s) of switching and routing to be used where equal access is provided through a centralized equal access arrangement. Those Telephone Company offices providing equal access through centralized arrangements are identified in NATIONAL EXCHANGE CARRIER ASSOCIATION, INC. TARIFF F.C.C. NO. 4.

APPROVED FOR FILING - THE PUBLIC SERVICE COMMISSION OF SOUTH CAROLINA - JULY 15, 2014

6.8 Description and Provision of Feature Group D (FGD) (Cont'd)

6.8.4 Measuring Access Minutes

Customer traffic to end offices will be recorded at end office switches or access tandem switches. Originating and terminating calls will be measured or derived to determine the basis for computing chargeable access minutes. In the event the customer message detail is not available because the Telephone Company lost or damaged tapes or incurred recording system outages, the Telephone Company will estimate the volume of lost customer access minutes of use based on previously known values.

FGD access minutes or fractions thereof, the exact value of the fraction being a function of the switched technology where the measurement is made, are accumulated over the billing period for each end office, and are then rounded up to the nearest access minute for each end office.

Originating Usage

For originating calls over FGD the measured minutes are the chargeable access minutes.

For originating calls over FGD provided with Multi-Frequency Signaling, usage measurement begins when the originating FGD first point of switching receives the first wink supervisory signal forwarded from the customer's point of termination.

For originating calls over FGD provided with Signaling System 7 (SS7) Signaling when the FGD end office is not routed through an access tandem for connection to the customer, usage measurement begins when the SS7 Initial Address Message is sent from the Service Switching Point (SSP) to the Signal Transfer Point (STP).

For originating calls over FGD provided with Signaling System 7 (SS7) Signaling when the FGD end office is routed through a tandem for connection to the customer, usage measurement begins when the FGD end office receives the SS7 Exit Message from the tandem.

APPROVED FOR FILING - THE PUBLIC SERVICE COMMISSION OF SOUTH CAROLINA - JULY 15, 2014

Switched Access Service

6.8 Description and Provision of Feature Group D (FGD) (Cont'd)

6.8.4 Measuring Access Minutes (Cont'd)

Originating Usage (Cont'd)

The measurement of originating call usage over FGD provided with Multi-Frequency Signaling ends when the originating FGD first point of switching receives disconnect supervision from either the originating end user's end office, indicating the originating end user has disconnected, or the customer's point of termination, whichever is recognized first by the first point of switching.

The measurement of originating calls usage over FGD provided with SS7 Signaling ends when the originating FGD end office receives an SS7 Release Message indicating either the originating or terminating end user has disconnected.

Terminating Usage

For terminating calls over FGD the chargeable access minutes are either measured or derived.

For terminating calls over FGD provided with Multifrequency Signaling where measurement capability exists, the measurement of chargeable access minutes begins when the terminating FGD first point of switching receives answer supervision from the terminating end user's end office, indicating the terminating end user has answered. This measurement ends when the terminating FGD first point of switching receives disconnect supervision from either the terminating end user's end office, indicating the terminating end user has disconnected, or the customer's point of termination, whichever is recognized first by the first point of switching.

For terminating calls over FGD, where measurement capability does not exist, terminating FGD usage is derived from originating usage, excluding usage from calls to closed end services or Directory Assistance Services.

For terminating calls over FGD with SS7 signaling, usage measurement begins when the terminating recording switch receives answer supervision from the terminating end user. The Telephone Company switch receives answer supervision and sends the indication to the customer in the form of an answer message. The measurement of terminating FGD call usage ends when the entry switch receives or sends a release message, whichever occurs first.

APPROVED FOR FILING - THE PUBLIC SERVICE COMMISSION OF SOUTH CAROLINA - JULY 15, 2014

Switched Access Service

6.8 Description and Provision of Feature Group D (FGD) (Cont'd)

6.8.5 Design Blocking Probability

The Telephone Company will design the facilities used in the provision of Switched Access Service FGD to meet the blocking probability criteria as set forth in (A) and (B) following.

(A) For Feature Group D, the design blocking objective will be no greater then one percent (.01) between the point of termination at the customer's designated premises and the end office switch, whether the traffic is directly routed without an alternate route or routed via an access tandem. Standard traffic engineering methods as set forth in reference document Telecommunications Transmission Engineering - Volume 3 - Networks and Services (Chapters 6-7) will be used by the Telephone Company to determine the number of transmission paths required to achieve this level of blocking.

(B) The Telephone Company will perform routine measurement functions to assure that an adequate number of transmission paths are in service. The Telephone Company will recommend that additional capacity (i.e., busy hour minutes of capacity or trunks) be ordered by the customer when additional paths are required to reduce the measured blocking to the designed blocking level. For the capacity ordered, the design blocking objective is assumed to have been met if the routine measurements show that the measured blocking does not exceed the threshold listed in the following tables.

APPROVED FOR FILING - THE PUBLIC SERVICE COMMISSION OF SOUTH CAROLINA - JULY 15, 2014

Switched Access Service

6.8 Description and Provision of Feature Group D (FGD) (Cont'd)

6.8.5 Design Blocking Probability (Cont'd)

(B) (Cont'd)

(1) For transmission paths carrying only first routed traffic direct between an end office and customer's designated premises without an alternate route, and for paths carrying only overflow traffic, the measured blocking thresholds are as follows:

Number of Transmission Paths Per Trunk Group	Transmission blocking thresholds in time consistent busy hour for the number of measurements taken between 8:00 a.m. and 11:00 p.m. per trunk group			
	15-20 Measurements	11-14 Measurements	7-10 Measurements	3-6 Measurements
2	7.0%	8.0%	9.0%	14.0%
3	5.0%	6.0%	7.0%	9.0%
4	5.0%	6.0%	7.0%	8.0%
5-6	4.0%	5.0%	6.0%	7.0%
7 or more	3.0%	3.5%	4.0%	6.0%

(2) For transmission paths carrying first routed traffic between an end office and customer's premises via an access tandem, the measured blocking thresholds are as follows:

Number of Transmission Paths Per Trunk Group	Transmission blocking thresholds in time consistent busy hour for the number of measurements taken between 8:00 a.m. and 11:00 p.m. per trunk group			
	15-20 Measurements	11-14 Measurements	7-10 Measurements	3-6 Measurements
2	4.5%	5.5%	6.0%	9.5%
3	3.5%	4.0%	4.5%	6.0%
4	3.5%	4.0%	4.5%	5.5%
5-6	2.5%	3.5%	4.0%	4.5%
7 or more	2.0%	2.5%	3.0%	4.0%

APPROVED FOR FILING - THE PUBLIC SERVICE COMMISSION OF SOUTH CAROLINA - JULY 15, 2014

Switched Access Service

6.8 Description and Provision of Feature Group D (FGD) (Cont'd)

6.8.6 Network Blocking Charge

The customer will be notified by the Telephone Company to increase its capacity (busy hour minutes of capacity or quantities of trunks) when excessive trunk group blocking occurs on groups carrying Feature Group D traffic and the measured access minutes for that hour exceed the capacity purchased. Excessive trunk group blocking occurs when the blocking thresholds stated below are exceeded. They are predicated on time consistent, hourly measurements over a 30 day period excluding Saturdays, Sundays and national holidays. If the order for additional capacity has not been received by the Telephone Company within 15 days of the notification, the Telephone Company will bill the customer, at the rate set forth in 17.2.2 following, for each overflow in excess of the blocking threshold when (1) the average "30 day period" overflow exceeds the threshold level for any particular hour and (2) the "30 day period" measured average originating or two-way usage for the same clock hour exceeds the capacity purchased.

Blocking Thresholds		
Trunks in Service	1%	1/2%
1-2	7%	4.5%
3-4	5%	3.5%
5-6	4%	2.5%
7 or greater	3%	2.0%

The 1% blocking threshold is for transmission paths carrying traffic direct (without an alternate route) between an end office and a customer's premises. The 1/2% blocking threshold is for transmission paths carrying first routed traffic between an end office and a customer's premises via an access tandem.

APPROVED FOR FILING - THE PUBLIC SERVICE COMMISSION OF SOUTH CAROLINA - JULY 15, 2014

Switched Access Service

6.8 Description and Provision of Feature Group D (FGD) (Cont'd)

6.8.7 Testing Capabilities

FGD is provided, in the terminating direction where equipment is available, with seven digit access to balance (100 type) test line, milliwatt (102 type) test line, nonsynchronous or synchronous test line, automatic transmission measuring (105 type) test line, data transmission (107 type) test line, loop around test line, short circuit test line and open circuit test line. In addition to the tests described in 6.2.4 preceding, which are included with the installation of service (Acceptance Testing) and as ongoing routine testing, Additional Cooperative Acceptance Testing, Additional Automatic Testing, and Additional Manual Testing, are available as set forth in 13.3.1 following.

When SS7 Signaling is ordered, network compatibility and other testing will be performed cooperatively by the Telephone Company and the customer as specified in Technical References TR-TSV 000905.

APPROVED FOR FILING - THE PUBLIC SERVICE COMMISSION OF SOUTH CAROLINA - JULY 15, 2014

6.9 Interim Access (Cont'd)

6.9.1 Reserved For Future Use

6.9.2 Reserved For Future Use

APPROVED FOR FILING - THE PUBLIC SERVICE COMMISSION OF SOUTH CAROLINA - JULY 15, 2014

Switched Access Service

6.10 Chargeable and Nonchargeable Optional Features

Following are descriptions of the various optional features that are available in lieu of, or in addition to, the standard features provided with the Feature Groups. They are provided as Common Switching, Transport Termination, or Interim NXX Translation options.

APPROVED FOR FILING - THE PUBLIC SERVICE COMMISSION OF SOUTH CAROLINA - JULY 15, 2014

Switched Access Service

6.10 Chargeable and Nonchargeable Optional Features (Cont'd)

6.10.1 Common Switching Nonchargeable Optional Features

The following table shows the Feature Group with which the optional features are available.

Option	Available Feature Groups A	B	C	D
A) Call Denial on Line or Hunt Group	X			
B) Service Code Denial on Line or Hunt Group	X			
C) Hunt Group Arrangement	X			
D) Uniform Call Distribution Arrangement	X			
E) Nonhunting Number for Use with Hunt Group or Uniform Call Distribution Arrangement	X			
F) Automatic Number Identification (ANI)		X	X	X
G) Up to 7 Digit Outpulsing of Access Digits to Customer		X		
H) Delay Dial Start-Pulsing Signaling			X	
I) Immediate Dial Pulse Address Signaling			X	
J) Dial Pulse Address Signaling			X	
K) Service Class Routing			X	X
L) Alternate Traffic Routing		X	X	X
M) Trunk Access Limitation			X	X
N) Call Gapping Arrangement				X
O) International Carrier Option				X
P) Band Advance Arrangement for Use with Special Access Service Utilized in the Provision of WATS or WATS-Type Services	X	X	X	X
Q) End Office End User Line Service Screening for Use with Special Access Service Utilized in the Provision of WATS or WATS-Type Services			X	X
R) Hunt Group Arrangement for Use with Special Access Service Utilized in the Provision of WATS or WATS-Type Services	X	X	X	X
S) Uniform Call Distribution Arrangement for Use with Special Access Service Utilized in the Provision of WATS or WATS-Type Services	X	X	X	X
T) Nonhunting Number Associated with Hunt Group Arrangement or Uniform Call Distribution Arrangement for Use with Special Access Service Utilized in the Provision of WATS or WATS-Type Services	X	X	X	X
U) Digital Switched 56 Service			X	X
V) Multifrequency Address Signaling			X	X
W) Signaling System 7 (SS7) Signaling			X	X
X) Calling Party Number (CPN)			X	X
Y) Carrier Selection Parameter (CSP)				X
Z) Charge Number Parameter (CNP)			X	X

APPROVED FOR FILING - THE PUBLIC SERVICE COMMISSION OF SOUTH CAROLINA - JULY 15, 2014

Switched Access Service

6.10 Chargeable and Nonchargeable Optional Features (Cont'd)

6.10.1 Common Switching Nonchargeable Optional Features (Cont'd)

(A) Call Denial on Line or Hunt Group

This option allows for the screening of terminating Feature Group A calls. There are two screening arrangements available with this option as follows: 1) limiting terminating calls for completion to only 411 or 555-1212 whichever is available, 611, 911, 800/888/877 and a Telephone Company specified set of NXXs within the Telephone Company local exchange calling area of the dial tone office in which the arrangement is provided, or, 2) limiting terminating calls to completion to only the NXXs associated with all end offices in the LATA, i.e., the call cannot be further switched or routed out of the LATA nor will calls be completed to 411 or 555-1212 whichever is available, 611, 911, or 800/888/877. All other calls are routed to a reorder tone or recorded announcement. Arrangement 1 is provided in all Telephone Company electronic end offices and, where available, in electromechanical end offices. Arrangement 2 is provided where available. This feature is available with Feature Group A.

(B) Service Code Denial on Line or Hunt Group

This option allows for the screening of terminating calls within the LATA, and for disallowing completion of calls to 0-, 555 and N11 (e.g., 411, 611, and 911). This feature is provided where available in all Telephone Company end offices. It is available with Feature Group A.

APPROVED FOR FILING - THE PUBLIC SERVICE COMMISSION OF SOUTH CAROLINA - JULY 15, 2014

Switched Access Service

6.10 Chargeable and Nonchargeable Optional Features (Cont'd)

6.10.1 Common Switching Nonchargeable Optional Features (Cont'd)

(C) Hunt Group Arrangement

This option provides the ability to sequentially access one of two or more line side connections in the originating direction, when the access code of the line group is dialed. This feature is provided in all Telephone Company end offices. It is available with Feature Group A. All Feature Group A access services in the same hunt group must provide off-hook supervisory signaling from the same point in time in the call sequence i.e., all off-hook supervisory signals must either be provided by the customer's equipment before the called party answers or all must be forwarded by the customer's equipment when the called party answers.

(D) Uniform Call Distribution Arrangement

This option provides a type of multiline hunting arrangement which provides for an even distribution of calls among the available lines in a hunt group. Where available, this feature is provided in Telephone Company electronic end offices only. It is available with Feature Group A.

(E) Nonhunting Number for Use with Hunt Group or Uniform Call Distribution Arrangement

This option provides an access to an individual line within a multiline hunt or uniform call distribution group. When the nonhunting number is dialed, access is provided when it is idle, or busy tone is provided when it is busy. Where available, this feature is provided in Telephone Company electronic end offices only. It is available with Feature Group A.

APPROVED FOR FILING - THE PUBLIC SERVICE COMMISSION OF SOUTH CAROLINA - JULY 15, 2014

Switched Access Service

6.10 Chargeable and Nonchargeable Optional Features (Cont'd)

6.10.1 Common Switching Nonchargeable Optional Features (Cont'd)

(F) Automatic Number Identification (ANI)

(1) This option provides the automatic transmission of a seven digit or ten digit number and information digits to the customer designated premises for calls originating in the LATA, to identify the calling station. The ANI feature is an end office software function which is associated on a call-by-call basis with:

(a) all individual transmission paths in a trunk group routed directly between an end office and a customer designated premises or, where technically feasible, with

(b) all individual transmission paths in a trunk group between an end office and an access tandem, and a trunk group between an access tandem and a customer designated premises.

(2) The seven digit ANI telephone number is generally available with Feature Groups B and C. With these Feature Groups, technical limitations may exist in Telephone Company switching facilities which require ANI to be provided only on a directly trunked basis. ANI will be transmitted on all calls except those originating from multiparty lines, pay telephones using Feature Group B, or when an ANI failure has occurred. Seven digit ANI is not available with SS7 Signaling.

APPROVED FOR FILING - THE PUBLIC SERVICE COMMISSION OF SOUTH CAROLINA - JULY 15, 2014

Switched Access Service

6.10 Chargeable and Nonchargeable Optional Features (Cont'd)

6.10.1 Common Switching Nonchargeable Optional Features (Cont'd)

(F) Automatic Number Identification (ANI) (Cont'd)

(3) The ten digit ANI telephone number is only available with Feature Group D. The ten digit ANI telephone number consists of the Numbering Plan Area (NPA) plus the seven digit ANI telephone number. The ten digit ANI telephone number will be transmitted on all calls except those identified as multiparty line or ANI failure, in which case only the NPA will be transmitted (in addition to the information digit described below). Ten digit ANI is provided with multifrequency address signaling or SS7 signaling.

(4) With Feature Group C, at the option of the customer, ANI may be ordered from end offices where Telephone Company recording for end user billing is not provided. Additionally, ANI is provided from end offices where message detail recording is not required by the Telephone Company; as with 800/888/877 service. ANI is not provided from end offices where the Telephone Company forwards ANI to its recording equipment.

APPROVED FOR FILING - THE PUBLIC SERVICE COMMISSION OF SOUTH CAROLINA - JULY 15, 2014

Switched Access Service

6.10 Chargeable and Nonchargeable Optional Features (Cont'd)

6.10.1 Common Switching Nonchargeable Optional Features (Cont'd)

(F) Automatic Number Identification (ANI) (Cont'd)

(5) Where complete ANI detail cannot be provided, e.g., on calls from 4 and 8 party services, information digits will be provided to the customer.

The information digits identify:

(a) telephone number is the station billing number - no special treatment required,

(b) multiparty line - telephone number is a 4- or 8-party line and cannot be identified - number must be obtained via an operator or in some other manner,

(c) ANI failure has occurred in the end office switch which prevents identification of calling telephone number - must be obtained by operator or in some other manner,

(d) hotel/motel originated call which requires room number identification,

(e) coinless station, hospital, inmate, etc. call which requires special screening or handling by the customer, and

(f) call is an Automatic Identified Outward Dialed (AIOD) call from customer premises equipment. The AIOD ANI telephone number is the listed telephone number of the customer and is not the telephone number of the calling party.

These ANI information digits are generally available with Feature Groups B, C, and D.

APPROVED FOR FILING - THE PUBLIC SERVICE COMMISSION OF SOUTH CAROLINA - JULY 15, 2014

Switched Access Service

6.10 Chargeable and Nonchargeable Optional Features (Cont'd)

6.10.1 Common Switching Nonchargeable Optional Features (Cont'd)

(F) Automatic Number Identification (ANI) (Cont'd)

(6) Additional ANI information digits are available with Feature Group D also. They include:

(a) InterLATA restricted - telephone number is identified line

(b) InterLATA restricted - hotel/motel line

(c) InterLATA restricted - coinless, hospital, inmate, etc., line

These information digits will be transmitted as agreed to by the customer and the Telephone Company.

(7) Restrictions on Use and Sale of ANI

(a) Access customers of this tariff may use ANI in the following manner:

(i) For billing and collection information, for routing, screening, and completing the originating subscriber's call or transaction, or for services directly related to the originating telephone subscriber's call or transaction.

The customer may use ANI to offer a product or service that is directly related to the products or services previously acquired from the customer by the originating subscriber.

(b) Access customers of this tariff may not use ANI in the following manner:

(i) Reusing or selling the telephone number or billing information without first notifying the originating telephone subscriber for such reuse or sale.

(ii) Disclosing (except as permitted in (a), preceding), any information derived from the ANI for any purpose other than 1) performing the services or transactions that are the subject of the originating subscriber's call, 2) ensuring network performance security and the effectiveness of call delivery, 3) compiling, using, and disclosing aggregate information, and 4) complying with applicable law or legal process.

APPROVED FOR FILING - THE PUBLIC SERVICE COMMISSION OF SOUTH CAROLINA - JULY 15, 2014

Switched Access Service

6.10 Chargeable and Nonchargeable Optional Features (Cont'd)

6.10.1 Common Switching Nonchargeable Optional Features (Cont'd)

(G) Up to 7 Digit Outpulsing of Access Digits to Customer

This option provides for the end office capability of providing up to 7 digits of the uniform access code (950-XXXX) to the customer designated premises. The customer can request that only some of the digits in the access code be forwarded. The access code digits would be provided to the customer designated premises using multifrequency signaling, and transmission of the digits would precede the forwarding of ANI if that feature were provided. It is available with Feature Group B.

(H) Delay Dial Start-Pulsing Signaling

Where available, this option provides a method of indicating to the near end trunk circuit readiness to accept address signaling information by the far end trunk circuit. Delay dial is often referred to as an off-hook, on-hook signaling sequence. The delay dial signal is the off-hook interval and the start-pulsing signal is the on-hook interval. With integrity check, the calling office will not outpulse until a delay dial (off-hook) signal followed by a start-pulsing (on-hook) signal has been identified at the calling office. This option is available with Feature Group C.

APPROVED FOR FILING - THE PUBLIC SERVICE COMMISSION OF SOUTH CAROLINA - JULY 15, 2014

Switched Access Service

6.10 Chargeable and Nonchargeable Optional Features (Cont'd)

6.10.1 Common Switching Nonchargeable Optional Features (Cont'd)

(I) Immediate Dial Pulse Address Signaling

Where available, this option provides for the forwarding of dial pulses from the Telephone Company end office to the customer without the need of a start-pulsing signal from the customer. It is available with Feature Group C.

(J) Dial Pulse Address Signaling

Where available, this trunk side option provides for the transmission of number information, e.g., called number, between the end office switching system and the customer designated premises (in either direction) by means of direct current pulses. It is available with Feature Group C.

(K) Service Class Routing

This option provides the capability of directing originating traffic from an end office to a trunk group to a customer designated premises, based on the line class of service (e.g., coin, multiparty or hotel/motel), service prefix indicator (e.g., 0-, 0+, 01+ or 011+) or service access code (e.g., 900). It is provided in suitably equipped end office or access tandem switches. It is available with Feature Groups C and D.

APPROVED FOR FILING - THE PUBLIC SERVICE COMMISSION OF SOUTH CAROLINA - JULY 15, 2014

Switched Access Service

6.10 Chargeable and Nonchargeable Optional Features (Cont'd)

6.10.1 Common Switching Nonchargeable Optional Features (Cont'd)

(L) Alternate Traffic Routing

When the customer orders both Direct Trunked Transport and Tandem Switched Transport at the same end office, this option provides the capability of directing originating traffic from an end office (or appropriately equipped access tandem) to a trunk group (the "high usage" group) to a customer designated premises until that group is fully loaded, and then delivering additional originating traffic (the "overflowing" traffic) from the same end office or access tandem to a different trunk group (the "final" group) to a second customer designated premises. The customer shall specify the last trunk CCS desired for the high usage group. It is provided in suitably equipped end office or access tandem switches. It is available with Feature Groups B, C and D.

(M) Trunk Access Limitation

This option provides for the routing of originating 900 service calls to a specified number of transmission paths in a trunk group, in order to limit (choke) the completion of such traffic to the customer. Calls to the designated service which could not be completed over the subset of transmission paths in the trunk group, i.e., the choked calls, would be routed to reorder tone. It is provided in all Telephone Company electronic end offices and where available in electromechanical end offices. It is available with Feature Groups C and D.

APPROVED FOR FILING - THE PUBLIC SERVICE COMMISSION OF SOUTH CAROLINA - JULY 15, 2014

Switched Access Service

6.10 Chargeable and Nonchargeable Optional Features (Cont'd)

6.10.1 Common Switching Nonchargeable Optional Features (Cont'd)

(N) Call Gapping Arrangement

This option, provided in suitably equipped end office switches, provides for the routing of originating calls to 900 service to be switched in the end office to all transmission paths in a trunk group at a prescribed rate of flow, e.g., one call every five seconds, in order to limit (choke) the completion of such traffic to the customer. Calls to the designated service which are denied access by this feature, i.e., the choked calls, would be routed to a no-circuit announcement. It is provided in selected Feature Group D equipped end offices and is available only with Feature Group D.

(O) International Carrier Option

This option allows for Feature Group D end offices or access tandem switches equipped for International Direct Distance Dialing to be arranged to forward the international calls of one or more international carriers to the customer (i.e., the Telephone Company is able to route originating international calls to a customer other than the one designated by the end user either through presubscription or 101XXXX dialing). This arrangement requires provision of written verification to the Telephone Company that the customer is authorized to forward such calls. The written verification must be in the form of a letter of agency authorizing the customer to order the option on behalf of the international carrier. This option is only provided at Telephone Company end offices or access tandems equipped for International Direct Distance Dialing, and is available with Feature Group D.

APPROVED FOR FILING - THE PUBLIC SERVICE COMMISSION OF SOUTH CAROLINA - JULY 15, 2014

Switched Access Service

6.10 Chargeable and Nonchargeable Optional Features (Cont'd)

6.10.1 Common Switching Nonchargeable Optional Features (Cont'd)

(P) Band Advance Arrangement for Use with Special Access Service Utilized in the Provision of WATS or WATS-Type Services

This option, which is provided in association with two or more Special Access Service groups, provides for the automatic overflow of terminating calls to a second Special Access Service group, when the first group has exceeded its call capacity. This option is available with Feature Groups A, B, C and D.

(Q) End Office End User Line Service Screening for Use with Special Access Service Utilized in the Provision of WATS or WATS-Type Services

This option provides the ability to verify that an end user has dialed a called party address (by screening the called NPA and/or NXX on the basis of geographical bands selected by the Telephone Company) which is in accordance with that end user's service agreement with the customer, e.g., WATS. This option is provided in all Telephone Company electronic end offices and, where available, in electromechanical end offices which are designated as WATS Serving Offices. It is available with Feature Groups C and D.

(R) Hunt Group Arrangement for Use with Special Access Service Utilized in the Provision of WATS or WATS-Type Services

This option provides the ability to sequentially access one of two or more Special Access Services utilized in the provision of WATS services (e.g., 800/888/877 Service Special access services) in the terminating direction, when the hunting number of the Special Access Service group is forwarded from the customer to the Telephone Company. This feature is provided in all Telephone Company designated WATS Access Serving Offices. It is available with Feature Groups A, B, C and D.

APPROVED FOR FILING - THE PUBLIC SERVICE COMMISSION OF SOUTH CAROLINA - JULY 15, 2014

Switched Access Service

6.10 Chargeable and Nonchargeable Optional Features (Cont'd)

6.10.1 Common Switching Nonchargeable Optional Features (Cont'd)

(S) Uniform Call Distribution Arrangement for Use with Special Access Service Utilized in the Provision of WATS or WATS-Type Services

This option provides a type of multiline hunting arrangement which provides for an even distribution of terminating calls among the available Special Access Lines utilized in the provision of WATS or WATS-Type Services in the hunt group. Where available, this feature is only provided in Telephone Company designated WATS Serving Offices. It is available with Feature Groups A, B, C and D.

(T) Nonhunting Number Associated with Hunt Group Arrangement or Uniform Call Distribution Arrangement for Use with Special Access Service Utilized in the Provision of WATS or WATS-Type Services

This option provides an arrangement for an individual Special Access Service utilized in the provision of WATS or WATS-Type Services within a multiline hunt or uniform call distribution group that provides access to that Special Access Service within the hunt or uniform call distribution group when it is idle or provides busy tone when it is busy, when the nonhunting number is dialed, without hunting to the next idle number. Where available, this feature is only provided in Telephone Company designated WATS Serving Offices. It is available with Feature Groups A, B, C and D.

(U) Digital Switched 56 Service

This option provides for a connection between a customer's premise and a suitably equipped end user's premise which uses end office switching and facilities capable of transmitting digital data up to 56 kilobits per second. Digital Switched 56 Service is only available in appropriately provisioned Feature Group C and Feature Group D offices as set forth in National Exchange Carrier Association, Inc. Tariff F.C.C. No. 4.

APPROVED FOR FILING - THE PUBLIC SERVICE COMMISSION OF SOUTH CAROLINA - JULY 15, 2014

Switched Access Service

6.10 Chargeable and Nonchargeable Optional Features (Cont'd)

6.10.1 Common Switching Nonchargeable Optional Features (Cont'd)

(V) Multifrequency Address Signaling

Multifrequency Address Signaling is available as an optional feature with FGC and FGD. This feature provides for the transmission of number information and control signals (e.g., number address signals, automatic number identification) between the end office switch and the customer's premises (in either direction). Multifrequency signaling arrangements make use of pairs of frequencies out of a group of six frequencies. Specific information transmitted is dependent upon feature group and call type (i.e., POTS, coin or operator). This feature is not available in combination with SS7 signaling.

(W) Signaling System 7 (SS7) Signaling

This feature provides common channel out of band transmission of address and supervisory SS7 protocol signaling information between the end office switch or the tandem office switching system and the customer's designated premises. The signaling information is transmitted over facilities provided with the Common Channel Signaling/Signaling System 7 Network Connection Service (CCSNC) as specified in 6.1.3(A) preceding. This feature is available with FGC and FGD and will be provided in accordance with the SS7 Interconnect specifications described in Technical Reference TR-TSV-000905.

(X) Calling Party Number (CPN)

This feature provides for the automatic transmission of the ten digit telephone number, associated with a calling station, to the customer's premises for calls originating in the LATA. The ten digit telephone number consists of the NPA plus the seven digit telephone number, which may or may not be the same number as the calling station's charge number. The ten digit telephone number will be coded as presented, or restricted via a "privacy indicator" for delivery to the called end user. This feature is provided with originating FGC and FGD with SS7 signaling. CPN is available where technically feasible.

APPROVED FOR FILING - THE PUBLIC SERVICE COMMISSION OF SOUTH CAROLINA - JULY 15, 2014

Switched Access Service

6.10 Chargeable and Nonchargeable Optional Features (Cont'd)

6.10.1 Common Switching Nonchargeable Optional Features (Cont'd)

(X) Calling Party Number (CPN) (Cont'd)

(1) Restrictions on Use and Sale of CPN

(a) Access customers of this tariff may use CPN in the following manner:

(i) For billing and collection information, for routing, screening, and completing the originating subscriber's call or transaction, or for services directly related to the originating telephone subscriber's call or transaction.

The customer may use CPN to offer a product or service that is directly related to the products or services previously acquired originating subscriber.

(b) Access customers of this tariff may not use CPN in the following manner:

(i) Reusing or selling the telephone number or billing information without first notifying the originating telephone subscriber and obtaining the affirmative consent of such subscriber or such reuse or sale.

(ii) Disclosing (except as permitted in (a), preceding) any information derived from the CPN for any purpose other than 1) performing the services or transactions that are the subject call, 2) ensuring network performance security and the effectiveness of call delivery, 3) compiling with applicable law or legal process

APPROVED FOR FILING - THE PUBLIC SERVICE COMMISSION OF SOUTH CAROLINA - JULY 15, 2014

Switched Access Service

6.10 Chargeable and Nonchargeable Optional Features (Cont'd)

6.10.1 Common Switching Nonchargeable Optional Features (Cont'd)

(Y) Carrier Selection Parameter (CSP)

This feature provides for the automatic transmission of a signaling indicator which signifies to the customer whether or not the call being processed originated from a presubscribed line. If the line was presubscribed, the indicator will signify if the end user did or did not dial 101XXXX. This feature is provided with originating FGD with SS7 signaling. (C)

(Z) Charge Number Parameter (CNP)

The CN Parameter is equivalent to the existing ten digit Automatic Number Identification (ANI) available with FGC where technically feasible and FGD with MF signaling. The CN Parameter provides for the automatic transmission of the ten digit billing number of the calling station and the originating line information. This feature is provided with originating FGC and FGD with SS7 signaling.

APPROVED FOR FILING - THE PUBLIC SERVICE COMMISSION OF SOUTH CAROLINA - JULY 15, 2014

Switched Access Service

6.10 Chargeable and Nonchargeable Optional Features (Cont'd)

6.10.1 Common Switching Nonchargeable Optional Features (Cont'd)

(Z) Charge Number Parameter (CNP) (Cont'd)

(1) Restrictions on Use and Sale of CNP

(a) access customers of this tariff may use CNP in the following manner:

(i) For billing and collection information, for routing, screening and completing the originating subscriber's call or transaction, or for services directly related to the originating telephone subscriber's call or transaction.

The customer may use CNP to offer a product or service that is directly related to the products or services previously acquired from the customer by the originating subscriber.

(b) Access customers of this tariff may not use CNP in the following manner:

(i) Reusing or selling the telephone number or billing information without first notifying the originating telephone subscriber and obtaining the affirmative consent of such subscriber for such reuse or sale.

(ii) Disclosing, except as permitted in (a), preceding, any information derived from the CNP for any purpose other than 1) performing the services or transactions that are the subject of the originating subscriber's call, 2) ensuring network performance security and the effectiveness of call delivery, 3) compiling, using, and disclosing aggregate information, and 4) complying with applicable law or legal process.

APPROVED FOR FILING - THE PUBLIC SERVICE COMMISSION OF SOUTH CAROLINA - JULY 15, 2014

Switched Access Service

6.10 Chargeable and Nonchargeable Optional Features (Cont'd)

6.10.2 Transport Termination Nonchargeable Optional Features

(A) Rotary Dial Station Signaling

This option provides for the transmission of called party address signaling from rotary dial stations to the customer designated premises for originating calls. This option is provided in the form of a specific type of Transport Termination. It is available with Feature Group B, only on a directly trunked basis.

(B) Operator Trunk - Coin, Non-Coin, or Combined Coin and Non-Coin

This option may be ordered to provide coin, non-coin, or combined coin and non-coin operation. It is available only with Feature Group C and is provided in electronic end offices and other Telephone Company end offices where equipment is available. It is provided as a trunk type of Transport Termination.

Coin, Non-Coin

This arrangement provides for initial coin return control, except in the case of non-coin, and routing of 0+, 0-, 1+, 01+ or 011+ prefixed originating coin and non-coin calls requiring operator assistance to the customer designated premises. Because operator assisted coin calling traffic is routed over a trunk group dedicated to operator assisted calls, this arrangement is only provided in association with the Service Class Routing option.

This arrangement is normally ordered by the customer in conjunction with the ANI optional feature, since the preponderance of trunk groups equipped with this arrangement will be terminated in the customer's automated operator services systems, rather than in the customer's manual cord boards.

APPROVED FOR FILING - THE PUBLIC SERVICE COMMISSION OF SOUTH CAROLINA - JULY 15, 2014

Switched Access Service

6.10 Chargeable and Nonchargeable Optional Features (Cont'd)

6.10.2 Transport Termination Nonchargeable Optional Features (Cont'd)

(B) Operator Trunk - Coin, Non-Coin, or Combined Coin and Non-Coin (Cont'd)

Combined Coin and Non-Coin

When so equipped, the ANI optional feature provides for the forwarding of information digits which identify that the call has originated from a hotel or motel, and whether room number identification is required, or that special screening is required, e.g., for coinless, dormitory, or inmate stations, or other screening arrangements agreed to between the customer and the Telephone Company.

(C) Operator Trunk - Full Feature

This option provides the initial coin return control function to the customer's operator. It is available with Feature Group D and is provided as a trunk type for Transport Termination. This feature is not available with SS7 signaling.

APPROVED FOR FILING - THE PUBLIC SERVICE COMMISSION OF SOUTH CAROLINA - JULY 15, 2014

Switched Access Service

6.10 Chargeable and Nonchargeable Optional Features (Cont'd)

6.10.3 Chargeable Optional Features

(A) Interim NXX Translation

This service is an originating offering utilizing trunk side Switched Access Service and provides a customer identification function based on the dialed SAC and NXX code.

For example, when a 1+900+NXX-XXXX call is originated by an end user, the Telephone Company will perform the customer identification function based on the dialed digits to determine the customer location to which the call is to be routed. If the call originates from an end office switch not equipped to provide the customer identification function, the call will be routed to an office at which the function is available. Once customer identification has been established, the call will be routed to that customer. Calls originating from an end office switch at which the customer identification function is performed, but to which the customer has not ordered Interim NXX Translation, will be blocked. Calls to a 900 number from coin telephones, 0+, 0-, 101XXXX, Inmate Service, Hotel/Motel Service and calling card calls will be blocked.

Calls to a 900 number dialed via 1+ from coin telephones, 0-, 101XXXX, Inmate Service, and Hotel/Motel Service will be blocked. Calls to a 900 number dialed via 0+ will normally be blocked. Orders received from customers to unblock 0+ calls to a 900 number will be accommodated where suitably equipped facilities exist.

The manner in which Interim NXX Translation is provided is dependent on the status of the end office from which the service is provided (i.e., equipped with equal access capabilities or not equipped with equal access capabilities). When Interim NXX Translation is provided from an end office not equipped with equal access capabilities, it will be provided in conjunction with FGC Switched Access Service.

The charge for Interim NXX Translation is as set forth in 17.2.1(C) following.

APPROVED FOR FILING - THE PUBLIC SERVICE COMMISSION OF SOUTH CAROLINA - JULY 15, 2014

Switched Access Service

6.10 Chargeable and Nonchargeable Optional Features (Cont'd)

6.10.3 Chargeable Optional Features (Cont'd)

(B) Reserved For Future Use

(C) Common Channel Signaling/Signaling System 7 Network Connection Service (CCSNC)

Common Channel Signaling/Signaling System 7 (CCS/SS7) Network Connection Service (CCSNC), which is available with Feature Group C and D, where technically feasible as designated in NATIONAL EXCHANGE CARRIER ASSOCIATION, INC. TARIFF FCC NO. 4, WIRE CENTER INFORMATION, provides a signaling path between a customer's designated Signaling Point of Interface (SPOI) and a Signaling Transfer Point (STP). This service provides customers with the use of a two-way signaling path for accessing information necessary for the completion of their end user's calls.

APPROVED FOR FILING - THE PUBLIC SERVICE COMMISSION OF SOUTH CAROLINA - JULY 15, 2014

Switched Access Service

6.10 Chargeable and Nonchargeable Optional Features (Cont'd)

6.10.3 Chargeable Optional Features (Cont'd)

(C) Common Channel Signaling/Signaling System 7 Network Connection Service (CCSNC) (Cont'd)

CCS/SS7 Network Connection Service is comprised of two parts; a Signaling Network Access Link (SNAL, consisting of Signaling Mileage Facility, Signaling Mileage Termination and Signaling Entrance Facility) and a Signaling Transfer Point (STP) Port. The SNAL is provided as a dedicated 56 Kpbs out-of-band signaling connection between the customer's SPOI and the STP Port on the STP.

The CCS/SS7 Network Connection Service is provisioned by a mated pair of STPs as described in Technical Reference TR-TSV 000905 in order to ensure network availability and reliability. The Telephone Company shall not be held liable for service outages if the customer employs technology related to the interconnection of signaling networks that do not adhere to generally accepted industry technical standards.

When CCS/SS7 Network Connection service is provisioned for use with SS7 Signaling, interconnection between signaling networks must occur at an STP.

(D) 800/888/877 Data Base Access Service

800/888/877 Data Base Access Service is provided with FGC or FGD switched access service. When a 1+800+NXX-XXXX, 1+888+NXX+XXXX or a 1+877+NXX+XXXX call is originated by an end user, the Telephone Company will utilize the Signaling System 7 (SS7) network to query an 800/888/877 data base to perform the identification function. The call will then be routed to the identified customer over FGC or FGD switched access.

APPROVED FOR FILING - THE PUBLIC SERVICE COMMISSION OF SOUTH CAROLINA - JULY 15, 2014

Switched Access Service

6.10 Chargeable and Nonchargeable Optional Features (Cont'd)

6.10.3 Chargeable Optional Features (Cont'd)

(D) 800/888/877 Data Base Access Service (Cont'd)

The manner in which 800/888/877 data base access service is provided is dependent on the availability of SS7 service at the end office from which the service is provided as outlined following:

- When 800/888/877 data base access service originates at an end office equipped with Service Switching Point (SSP) capability for querying centralized data bases or at a non-SSP equipped end office that can accommodate direct trunking of originating 800/888/877 calls, all such service will be provisioned from that end office.

- When 800/888/877 data base access service originates at an end office not equipped with SSP customer identification capability, the 800/888/877 call will be delivered to the access tandem on which the end office is homed for 800/888/877 service and which is equipped with the SSP feature to query centralized data bases.

Query charges as set forth in 17.2.2 following are in addition to those charges applicable for the Feature Group C or Feature Group D switched access service.

(E) Flexible Automatic Number Identification (Flex ANI)

The Flex ANI feature is an optional switching feature and enhancement to ANI. This option is provided per end office on a Carrier Identification Code (CIC) basis and is available with Feature Group D service at end offices capable of providing this feature, as listed in the NATIONAL EXCHANGE CARRIER ASSOCIATION, INC. TARIFF F.C.C NO. 4.

Flex ANI is available on inband signaling or in the Originating Line Information Parameter in the Basic Initial Address Message (IAM) Delivery optional feature for SS7 signaling. Flex ANI provides additional values for the Information Indicator (ii) digits that are associated with various classes of service not available with the standard ANI digits. The customer must have ANI in order to have Flex ANI.

APPROVED FOR FILING - THE PUBLIC SERVICE COMMISSION OF SOUTH CAROLINA - JULY 15, 2014

Switched Access Service

6.10 Chargeable and Nonchargeable Optional Features (Cont'd)

6.10.3 Chargeable Optional Features (Cont'd)

(F) Carrier Identification Parameter (CIP)

This feature enables customers to consolidate trunk groups to provide Equal Access connections for the carrier and its reseller carriers over one trunk group. The Carrier Identification Parameter (CIP) software delivers the Carrier Identification Code (CIC) in the initial address message (IAM) from an originating local exchange network on Feature Group D (FGD), SS7-supported calls. These calls include CIP for FGD, 700, 900+NXX & 800/888/877 Database type calls. Presubscribed carrier information in CIP will be used for normal 1+ presubscribed calls. This enables the information to be sent in the forward direction to the transit network indicating the transit network selected by the originating subscriber. This feature is offered on a per-carrier basis, see Section 17.2.2 for rates.

APPROVED FOR FILING - THE PUBLIC SERVICE COMMISSION OF SOUTH CAROLINA - JULY 15, 2014

Special Access Service

CONTENTS

			Page No.
7.1	General		1
	7.1.1	Channel Types	1
	7.1.2	Service Descriptions	4
	7.1.3	Service Configurations	6
	7.1.4	Alternate Use	11
	7.1.5	Special Facilities Routing	11
	7.1.6	Design Layout Report	11
	7.1.7	Acceptance Testing	12
	7.1.8	Ordering Options and Conditions	12
7.2	Rate Regulations		13
	7.2.1	Rate Categories	13
	7.2.2	Types of Rates and Charges	16
	7.2.3	Moves	20
	7.2.4	Minimum Periods	21
	7.2.5	Mileage Measurement	22
	7.2.6	Facility Hubs	23
	7.2.7	Mixed Use Analog and Digital High Capacity Services	26
	7.2.8	Reserved For Future Use	27
7.3	Surcharge For Special Access Service		28
	7.3.1	General	28
	7.3.2	Application	28
	7.3.3	Exemption of Special Access Service	29
	7.3.4	Rate Regulations	30
7.4	Metallic Service		32
	7.4.1	Basic Channel Description	32
	7.4.2	Technical Specifications Packages and Network Channel Interfaces	32
	7.4.3	Optional Features and Functions	32
7.5	Telegraph Grade Service		33
	7.5.1	Basic Channel Description	33
	7.5.2	Technical Specifications Packages and Network Channel Interfaces	33
	7.5.3	Optional Features and Functions	33
7.6	Voice Grade Service		34
	7.6.1	Basic Channel Description	34
	7.6.2	Technical Specifications Packages and Network Channel Interfaces	34
	7.6.3	Optional Features and Functions	34

APPROVED FOR FILING - THE PUBLIC SERVICE COMMISSION OF SOUTH CAROLINA - JULY 15, 2014

Special Access Service

CONTENTS

		Page No.
7.7	Program Audio Service	42
7.7.1	Basic Channel Description	42
7.7.2	Technical Specifications Packages and Network Channel Interfaces	42
7.7.3	Optional Features and Functions	42
7.8	Video Service	44
7.8.1	Basic Channel Description	44
7.8.2	Technical Specifications Packages and Network Channel Interfaces	44
7.9	Digital Data Service	45
7.9.1	Basic Channel Description	45
7.9.2	Technical Specifications Packages and Network Channel Interfaces	46
7.9.3	Optional Features and Functions	47
7.10	High Capacity Service	48
7.10.1	Basic Channel Description	48
7.10.2	Technical Specifications Packages and Network Channel Interfaces	49
7.10.3	Optional Features and Functions	50
7.11	Individual Case Filings	53

APPROVED FOR FILING - THE PUBLIC SERVICE COMMISSION OF SOUTH CAROLINA - JULY 15, 2014

Special Access Service

7.1 General

Special Access Service provides a transmission path to connect customer designated premises*, directly, through a Telephone Company hub or hubs where bridging or multiplexing functions are performed. Special Access Service includes all exchange access not utilizing Telephone Company end office switches, except for the closed end of WATS.

The connections provided by Special Access Service can be either analog or digital. Analog connections are differentiated by spectrum and bandwidth. Digital connections are differentiated by bit rate.

7.1.1 Channel Types

There are seven types of channels used to provide Special Access Services. Each type has its own characteristics. All are subdivided by one or more of the following:

- Transmission specifications,
- Bandwidth,
- Speed (i.e., bit rate),
- Spectrum

Customers can order a basic channel and select from a list of available transmission parameters and channel interfaces that they desire in order to meet specific communications requirements.

For purposes of ordering channels, each has been identified as a type of Special Access Service. Each type of Special Access Service is specifically listed on the following page and identifies the specific bandwidth and speed being offered. The customer must select the appropriate service that provides the speed and bandwidth desired.

* Telephone Company Centrex CO and CO-like switches and packet switches included in Public Packet Switching Network (PPSN) Service are considered to be a customer designated premises for purposes of this tariff.

APPROVED FOR FILING - THE PUBLIC SERVICE COMMISSION OF SOUTH CAROLINA - JULY 15, 2014

Special Access Services

7.1 General (Cont'd)

7.1.1 Channel Types (Cont'd)

Following is a brief description of each type of channel:

Metallic - a channel for the transmission of low speed varying signals at rates up to 30 baud. This channel type will be grandfathered for customers of record as of January 16, 2000. It will not be available to new customers after January 16, 2000.

Telegraph Grade - a channel for the transmission of binary signals at rates of 0 to 75 baud or 0 to 150 baud. This channel type will be grandfathered for customers of record as of January 16, 2000. It will not be available to new customers after January 16, 2000.

Voice Grade - a channel for the transmission of analog signals within an approximate bandwidth of 300 to 3000 Hz.

Program Audio - a channel for the transmission of audio signals. The nominal frequency bandwidths are from 200 to 3500 Hz, from 100 to 5000 Hz, from 50 to 8000 Hz, or from 50 to 15000 Hz.

Video - a channel for the transmission of standard 525 line 60 field monochrome or National Television Systems Committee color video signal and one or two associated 5 or 15 kHz audio signals. The bandwidth is either 30 Hz to 4.5 MHz or 30 Hz to 6.6 MHz.

Digital Data - a channel for the digital transmission of synchronous serial data at rates of 2.4, 4.8, 9.6, 19.2, 56.0 or 64.0 Kbps.

High Capacity - a channel for the transmission of isochronous serial digital data at rates of 1.544, 3.152, 6.312, 44.736 or 274.176 Mbps.

APPROVED FOR FILING - THE PUBLIC SERVICE COMMISSION OF SOUTH CAROLINA - JULY 15, 2014

Special Access Service

7.1 General (Cont'd)

7.1.1 Channel Types (Cont'd)

Detailed descriptions of each of the channel types are provided in 7.4 through 7.10 following.

The customer also has the option of ordering Voice Grade and High Capacity facilities (i.e., 1.544 Mbps, 3.152 Mbps, 6.312 Mbps, 44.736 Mbps and 274.176 Mbps) to Telephone Company hubs for multiplexing to individual channels of a lower capacity or bandwidth. Descriptions of the types of multiplexing available at the hubs, as well as the number of individual channels which may be derived from each type of facility, are set forth in 7.6 and 7.10 following. Additionally, the customer may specify optional features for the individual channels derived from the facility to further tailor the channel to meet specific communications requirements. Descriptions of the optional features and functions available are set forth in 7.2.1 following.

For example, a customer may order a 3.152 Mbps High Capacity channel from a customer designated premises to a Telephone Company hub for multiplexing to two 1.544 Mbps channels. The 1.544 Mbps channels may be further multiplexed at the same or a different hub to Voice Grade channels or may be extended to other customer designated premises or hubs. Optional features may be added to either the 1.544 Mbps or the Voice Grade channels.

APPROVED FOR FILING - THE PUBLIC SERVICE COMMISSION OF SOUTH CAROLINA - JULY 15, 2014

Special Access Service

7.1 General (Cont'd)

7.1.2 Service Descriptions

For the purposes of ordering, there are seven categories of Special Access Service. These are:

	Service Designator Codes
Metallic	MT
Telegraph Grade	TG
Voice	VG
Program Audio	AP
Video	TV
Digital Data	DA
High Capacity	HC

Each service consists of a basic channel to which a technical specifications package (customized or predefined), channel interface(s) and, when desired, optional features and functions are added to construct the service desired by the customer. Technical specifications packages are described in Section 15. following, optional features and functions are described in this section. Channel interfaces are described in 15.2 following.

Customized technical specifications packages will be provided where technically feasible. If the Telephone Company determines that the requested parameter specifications are not compatible, the customer will be advised and given the opportunity to change the order.

When a customized channel is ordered the customer will be notified whether Additional Engineering Charges apply. In such cases, the customer will be advised and given the opportunity to change the order.

The channel descriptions provided in 7.4 through 7.10 following, specify the characteristics of the basic channel and indicate whether the channel is provided between customer designated premises, between a customer designated premises and a Telephone Company hub where bridging or multiplexing functions are performed, between hubs, or between a customer designated premises and a WATS Serving Office.

APPROVED FOR FILING - THE PUBLIC SERVICE COMMISSION OF SOUTH CAROLINA - JULY 15, 2014

Special Access Service

7.1 General (Cont'd)

7.1.2 Service Descriptions (Cont'd)

(A) Information pertaining to the technical specifications packages indicates the transmission parameters that are available with each package. This information is displayed in matrices set forth in 15.2 following.

(B) Channel interfaces at each Point of Termination on a two- point service may be symmetrical or asymmetrical. On a multipoint service they may also be symmetrical or asymmetrical, but communications can only be provided between compatible channel interfaces. Only certain channel inter- faces are compatible. These are set forth in 15.2. following, in a combination format.

(C) Only certain channel interface combinations are available with the predefined technical specifications packages. These are delineated in the Technical References set forth in (F) following. When a customized channel is requested, all channel interface combinations available with the specified type of service are available with the customized channel.

(D) The optional features and functions available with each type of Special Access Service are described in this section. The optional features and functions information also indicates with which technical specifications packages they are available. Such information is displayed in matrices set forth in 15.2 following with the optional feature or function listed down the left side and the technical specifications package listed across the top.

APPROVED FOR FILING - THE PUBLIC SERVICE COMMISSION OF SOUTH CAROLINA - JULY 15, 2014

Special Access Service

7.1 General (Cont'd)

7.1.2 Service Descriptions (Cont'd)

(E) The Telephone Company will maintain services installed prior to April 1, 1985, at their existing transmission specifications, provided such performance specifications do not exceed the standards listed in this provision. Those services exceeding the standards listed will be maintained at the performance levels specified in this tariff.

(F) All services installed after April 1, 1985 will conform to the transmission specification standards contained in this tariff or in the following Technical References for each category of service:

Metallic	TR-NPL-000336
Telegraph Grade	TR-NPL-000336
Voice Grade	TR-TSY-000335 PUB 41004, Table 4
Program Audio and associated Addendum	TR-NPL-000337
Video	TR-NPL-000338
Digital Data	TR-NWT-000341
For 2.4, 4.8, 9.6 & 56.0 Kpbs	BellCore Pub 62310 (MDP-326-726)
For 19.2 Kpbs	INC Bulletin CB-INC-100
For 64.0 Kpbs	AT&T PUB 62310
High Capacity	TR-INS-000342 TR-NPL-000054 PUB 62411

7.1.3 Service Configurations

There are two types of service configurations over which Special Access Services are provided: two-point service and multipoint service.

(A) Two-Point Service

A two-point service connects two customer designated premises, either on a directly connected basis or through a hub where multiplexing functions are performed, or a customer designated premises and a WATS Serving Office (WSO).

Applicable rate elements are:
- Channel Terminations
- Channel Mileage (as applicable)
- Optional Features and Functions (when applicable)

APPROVED FOR FILING - THE PUBLIC SERVICE COMMISSION OF SOUTH CAROLINA - JULY 15, 2014

Special Access Service

7.1 General (Cont'd)

7.1.3 Service Configurations (Cont'd)

(A) Two-Point Service (Cont'd)

A Special Access Surcharge, as set forth in 7.3 following may be applicable.

The following diagram depicts a two-point Voice Grade service connecting two Customer Designated Premises (CDP). The service is provided with C-Type conditioning.

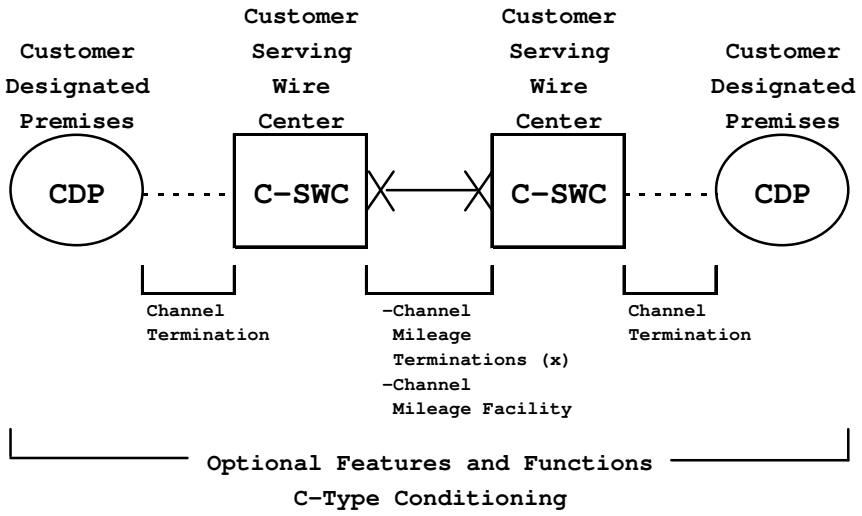

Applicable rate elements are:

- Channel Terminations (applicable one (1) per CDP)
- Channel Mileage
  - 2 Channel Mileage Terminations plus
  - 1 section, Channel Mileage Facility per mile
- C-Type Conditioning Optional Feature

APPROVED FOR FILING - THE PUBLIC SERVICE COMMISSION OF SOUTH CAROLINA - JULY 15, 2014

Special Access Service

7.1 General (Cont'd)

7.1.3 Service Configurations (Cont'd)

(A) Two-Point Service (Cont'd)

The following diagram depicts a two-point Voice Grade service connecting a customer designated premises to a WATS serving office.

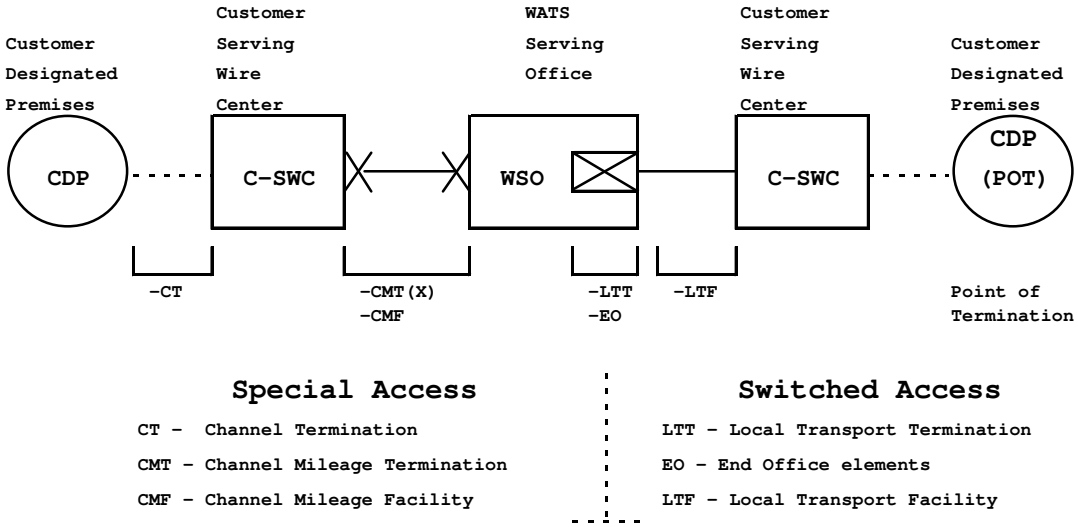

Applicable rate elements for Special Access are:

- Channel Termination
- Channel Mileage
  - . 2 Channel Mileage Terminations plus
  - . 1 section, Channel Mileage Facility per mile
- Special Access Surcharge*

* May not apply if exemption certificate is provided.

APPROVED FOR FILING - THE PUBLIC SERVICE COMMISSION OF SOUTH CAROLINA - JULY 15, 2014

Special Access Service

7.1 General (Cont'd)

7.1.3 Service Configurations (Cont'd)

(B) Multipoint Service

Multipoint service connects three or more customer designated premises through one or more Telephone Company hubs. Only certain types of Special Access Service are provided as multipoint service. These are so designated in the descriptions for the appropriate channel.

The channel between hubs (i.e., bridging locations) on a multipoint service is a mid-link. There is no limitation on the number of mid-links available with a multipoint service. However, when more than three mid-links in tandem are provided the quality of the overall service may be degraded.

Multipoint service utilizing a customized technical specifications package, as set forth in 7.1.2 preceding and 15.2 following, will be provided when technically possible. If the Telephone Company determines that the requested characteristics for a multipoint service are not compatible, the customer will be advised and given the opportunity to change the order.

When ordering, the customer will specify the desired bridging hub(s). NATIONAL EXCHANGE CARRIER ASSOCIATION TARIFF F.C.C. NO. 4 identifies serving wire centers, hub locations and the type of bridging functions available.

Applicable Rate Elements are:

- Channel Terminations (one per customer designated premises)
- Channel Mileage (as applicable between the serving wire center for each customer designated premises and the hub and between hubs).
- Bridging
- Additional Optional Features and Functions (when applicable).

APPROVED FOR FILING - THE PUBLIC SERVICE COMMISSION OF SOUTH CAROLINA - JULY 15, 2014

Special Access Service

7.1 General (Cont'd)

7.1.3 Service Configurations (Cont'd)

(B) Multipoint Service (Cont'd)

The Special Access Surcharge, as set forth in 7.3 following may be applicable.

Example: Voice Grade multipoint service connecting four customer designated premises (CDP) via two customer specified bridging hubs.

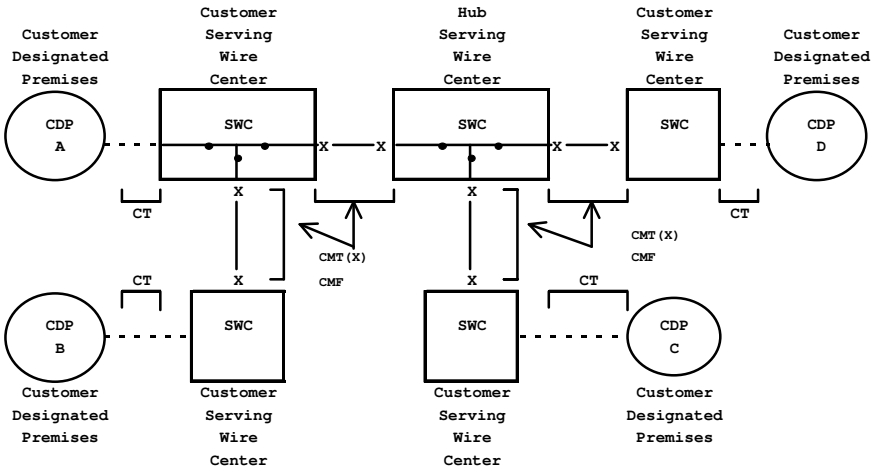

Applicable rate elements are:

- Channel Terminations (4 applicable)
- Channel Mileage
  - o 2 Channel Mileage Terminations per Channel Mileage Facility section for a total of 8, plus
  - o 4 sections, Channel Mileage Facility per mile
- Bridging Optional Feature (6 applicable, i.e., each bridge port)

APPROVED FOR FILING - THE PUBLIC SERVICE COMMISSION OF SOUTH CAROLINA - JULY 15, 2014

Special Access Service

7.1 General (Cont'd)

7.1.4 Alternate Use

Alternate Use occurs when a service is arranged by the Telephone Company so that the customer can select different types of transmission at different times. A customer may use a service in any private beneficial manner. However, where technical or engineering changes are required to effectuate an alternate use, the Telephone Company will make such special arrangements available on an individual case basis.

The arrangement required to transfer the service from one operation to the other (i.e., the transfer relay and control leads) will be rated and provided on an individual case basis and filed in Section 12. following, Specialized Service or Arrangements. The customer will pay the stated tariff rates for the Access Service rate elements for the service ordered [i.e., Channel Terminations, Channel Mileage (as applicable) and Optional Features and Functions (if any)].

7.1.5 Special Facilities Routing

A customer may request that the facilities used to provide Special Access Service may be specially routed. The regulations, rates and charges for Special Facilities Routing (i.e., Avoidance, Diversity and Cable-Only) are set forth in Section 11. following.

7.1.6 Design Layout Report

At the request of the customer, the Telephone Company will provide to the customer the make-up of the facilities and services provided under this tariff as Special Access Service to aid the customer in designing its overall service. This information will be provided in the form of a Design Layout Report. The Design Layout Report will be provided to the customer at no charge, and will be reissued or updated whenever these facilities are materially changed.

APPROVED FOR FILING - THE PUBLIC SERVICE COMMISSION OF SOUTH CAROLINA - JULY 15, 2014

Special Access Service

7.1 General (Cont'd)

7.1.7 Acceptance Testing

At no additional charge, the Telephone Company will, at the customer's request, cooperatively test the following at the time of installation:

(A) For Voice Grade analog services, acceptance test will include tests for loss, 3-tone slope, DC continuity, operational signaling, C-notched noise, and C-message noise when these parameters are applicable and specified in the order of service. Additionally, for Voice Grade services, a balance (improved loss) test will be made if the customer has ordered the improved loss optional feature.

(B) For other analog services (i.e., Metallic, Telegraph, Program Audio, and Video) and for digital services (i.e., Digital Data and High Capacity), acceptance tests will include tests applicable to the service as specified by the customer in the order for service.

In addition to the above tests, Additional Cooperative Acceptance Testing for Voice Grade service to test other parameters, as described in 13.3.1(B) following, is available at the customer's request. All test results will be made available to the customer upon request.

7.1.8 Ordering Options and Conditions

Special Access Service is ordered under the Access Order provisions set forth in Section 5. preceding. Also included in that section are other charges which may be associated with ordering Special Access Service (e.g., Service Date Change Charges, Cancellation Charges, etc.).

APPROVED FOR FILING - THE PUBLIC SERVICE COMMISSION OF SOUTH CAROLINA - JULY 15, 2014

Special Access Service

7.2 Rate Regulations

This section contains the specific regulations governing the rates and charges that apply for Special Access.

7.2.1 Rate Categories

There are three basic rate categories which apply to Special Access Service:

- Channel Terminations (described in 7.2.1(A) following)
- Channel Mileage (described in 7.2.1(B) following)
- Optional Features and Functions (described in 7.2.1(C) following).

(A) Channel Terminations:

The Channel Termination rate category recovers the costs associated with the communications path between a customer designated premises and the serving wire center of that premises. Included as part of the Channel Termination is a standard channel interface arrangement which defines the technical characteristics associated with the type of facilities to which the access service is to be connected at the Point of Termination (POT) and the type of signaling capability, if any. The signaling capability is provided as an optional feature as set forth in (C) following. One Channel Termination charge applies per customer designated premises at which the channel is terminated. This charge will apply even if the customer designated premises and the serving wire center are collocated in a Telephone Company building.

For DS3 High Capacity Service, the Channel Termination rates are made up of the DS3 Capacity Interface rate and the DS3 Channel Installed rate. The Capacity Interface rate is dependent upon the capacity ordered (i.e., Capacity Interface of 1, 3, 6 or 12) and is applicable at each customer designated premises (e.g., a capacity of 3 can terminate 1, 2, or 3 DS3 services). One DS3 Channel Installed rate applies per customer designated premises at which the channel is terminated for each DS3 channel that is ordered. These charges will apply even if the customer designated premises and the serving wire center are collocated in a Telephone Company building.

* The Channel Termination, Channel Mileage Termination and Channel Mileage Facility Special Access rate elements should not be applied to intrastate WATS and 800/888 dedicated services. The billing of these dedicated services (WATS and 800/888) should be in accordance with the rates of the Southwestern Bell WATS tariff. Also, the Special Access Surcharge should not be applied to the intrastate WATS and 800/888 services.

APPROVED FOR FILING - THE PUBLIC SERVICE COMMISSION OF SOUTH CAROLINA - JULY 15, 2014

Special Access Service

7.2 Rate Regulations (Cont'd)

7.2.1 Rate Categories (Cont'd)

(B) Channel Mileage

The Channel Mileage rate category recovers the costs associated with the end office equipment and the transmission facilities between the serving wire centers associated with two customer designated premises, between a serving wire center associated with a customer designated premises and a Telephone Company hub or between two Telephone Company hubs. Channel Mileage rates are made up of the Channel Mileage Facility rate and the Channel Mileage Termination rate.

(1) Channel Mileage Facility

The Channel Mileage Facility rate recovers the per mile cost for the transmission path which extends between the Telephone Company serving wire centers and/or hub(s).

(2) Channel Mileage Termination

The Channel Mileage Termination rate recovers the cost for end office equipment associated with terminating the facility (i.e., basic circuit equipment and terminations at serving wire centers and hubs). The Channel Mileage Termination rate will apply at the serving wire center(s) for each customer designated premises and Telephone Company hub where the channel is terminated. If the Channel Mileage is between Telephone Company bridging hubs, the Channel Mileage Termination rate will apply per Telephone Company designated hub. If the Channel Mileage is between the serving wire center for a customer designated premises and a WATS Serving Office, the Channel Mileage Termination rate will apply at both the serving wire center associated with the customer designated premises and the WATS Serving Office. When the Channel Mileage Facility is zero (i.e., collocated serving wire centers), neither the Channel Mileage Facility rate nor the Channel Mileage Termination rate will apply.

* The Channel Termination, Channel Mileage Termination and Channel Mileage Facility Special Access rate elements should not be applied to intrastate WATS and 800/888 dedicated services. The billing of these dedicated services (WATS and 800/888) should be in accordance with the rates of the Southwestern Bell WATS tariff. Also, the Special Access Surcharge should not be applied to the intrastate WATS and 800/888 services.

APPROVED FOR FILING - THE PUBLIC SERVICE COMMISSION OF SOUTH CAROLINA - JULY 15, 2014

Special Access Service

7.2 Rate Regulations (Cont'd)

7.2.1. Rate Categories (Cont'd)

(C) Optional Features and Functions

The Optional Features and Functions rate category recovers the costs associated with optional features and functions which may be added to a Special Access Service to improve its quality or utility to meet specific communications requirements. These are not necessarily identifiable with specific equipment, but rather represent the end result in terms of performance characteristics which may be obtained. These characteristics may be obtained by using various combinations of equipment. Although the equipment necessary to perform a specified function may be installed at various locations along the path of the service, they will be charged for as a single rate element.

Examples of Optional Features and Functions that are available include, but are not limited to, the following:

- Signaling Capability
- Hubbing Functions
- Conditioning
- Transfer Arrangements

Descriptions for each of the available Optional Features and Functions are set forth in 7.4 through 7.10 following.

A hub is a Telephone Company designated serving wire center at which bridging or multiplexing functions are performed. The bridging functions performed are to connect three or more customer designated premises in a multipoint arrangement. The multiplexing functions are to channelize analog or digital facilities to individual services requiring a lower capacity or bandwidth.

NATIONAL EXCHANGE CARRIER ASSOCIATION, INC. TARIFF F.C.C. NO. 4 identifies serving wire centers, Hub locations, hub level, (i.e., Hub, Terminus Hub, Intermediate Hub, or Super-Intermediate Hub) and the type of bridging or multiplexing functions available. Additionally, subtending wire centers are identified for Intermediate and Super-Intermediate Hubs.

APPROVED FOR FILING - THE PUBLIC SERVICE COMMISSION OF SOUTH CAROLINA - JULY 15, 2014

Special Access Service

7.2 Rate Regulations (Cont'd)

7.2.2 Types of Rates and Charges

There are three types of rates and charges. These are monthly rates, daily rates and nonrecurring charges. The rates and charges are described as follows:

(A) Monthly Rates

Monthly rates are recurring rates that apply each month or fraction thereof that a Special Access Service is provided. For billing purposes, each month is considered to have 30 days.

(B) Daily Rates

Daily rates are recurring rates that apply to each 24 hour period or fraction thereof that a Program Audio or Video Special Access Service is provided for part-time use. For purposes of applying daily rates, the 24 hour period is not limited to a calendar day.

Part-time Video or Program Audio Service provided within a consecutive 30 day period will be charged the daily rate, not to exceed the monthly rate. For each day or partial day after a consecutive 30 day period of service, a charge equal to 1/30th of the monthly rate shall apply.

APPROVED FOR FILING - THE PUBLIC SERVICE COMMISSION OF SOUTH CAROLINA - JULY 15, 2014

Special Access Service

7.2 Rate Regulations (Cont'd)

7.2.2 Types of Rates and Charges (Cont'd)

(C) Nonrecurring Charges

Nonrecurring charges are one-time charges that apply for specific work activity (i.e., installation or change to an existing service). The types of nonrecurring charges that apply for Special Access Service are: installation of service, installation of optional features and functions, and service rearrangements. These charges are in addition to the Access Order Charge as specified in 17.4.1 following.

(1) Installation of Service

Nonrecurring charges apply to each service installed. The nonrecurring charges for the installation of service are set for each channel type as a nonrecurring charge for the Channel Termination.

(2) Installation of Optional Features and Functions

When optional features and functions are installed coincident with the initial installation of service, no separate nonrecurring charge is applicable. When optional features and functions are installed or changed subsequent to the installation of service, an Access Order Charge as specified in 17.4.1 following will apply per order.

APPROVED FOR FILING - THE PUBLIC SERVICE COMMISSION OF SOUTH CAROLINA - JULY 15, 2014

Special Access Service

7.2 Rate Regulations (Cont'd)

7.2.2 Types of Rates and Charges (Cont'd)

(C) Nonrecurring Charges (Cont'd)

(3) Service Rearrangements

Service rearrangements are changes to existing (installed) services which may be administrative only in nature, as set forth following, or that involve actual physical change to the service. Changes to pending orders are set forth in 5.4 preceding.

Changes in the physical location of the point of termination or customer designated premises are moves as set forth in 7.2.3 following.

Changes in the type of Service or Channel Termination which result in a change of the minimum period requirement will be treated as a discontinuance of the service and an installation of a new service.

Changes in ownership or transfer of responsibility from one customer to another will be treated as a discontinuance of the service and an installation of a new service. In the event the change in ownership or transfer of responsibility is as set forth in 2.1.2(A) preceding where there is no change in facilities or arrangements, the change will be treated as an administrative change.

APPROVED FOR FILING - THE PUBLIC SERVICE COMMISSION OF SOUTH CAROLINA - JULY 15, 2014

Special Access Service

7.2 Rate Regulations (Cont'd)

7.2.2 Types of Rates and Charges (Cont'd)

(C) Nonrecurring Charges (Cont'd)

(3) Service Rearrangements (Cont'd)

Administrative changes will be made without charge(s) to the customer. Administrative changes are as follows:

- Change of customer name,
- Change of customer or customer's end user premises address when the change of address is not a result of a physical relocation of equipment,
- Change in billing data (name, address, or contact name or telephone number),
- Change of agency authorization,
- Change of customer circuit identification,
- Change of billing account number,
- Change of customer test line number,
- Change of customer or customer's end user contact name or telephone number, and
- Change of jurisdiction.

All other service rearrangements will be charged for as follows:

- If the change involves the addition of other customer designated premises to an existing service, the nonrecurring charge for the channel termination rate element will apply. The charge(s) will apply only for the location(s) that is being added. The charge(s) will be in addition to an Access Order Charge as set forth in 17.4.1 following.

APPROVED FOR FILING - THE PUBLIC SERVICE COMMISSION OF SOUTH CAROLINA - JULY 15, 2014

Special Access Service

7.2 Rate Regulations (Cont'd)

7.2.2 Types of Rates and Charges (Cont'd)

(C) Nonrecurring Charges (Cont'd)

(3) Service Rearrangements (Cont'd)

- If the change involves the addition of an optional feature or function, (with the exception of the addition of Clear Channel Capability to an existing service), or if the change involves changing the type of signaling on a Voice Grade service, and for all other changes, the Access Order Charge as set forth in 17.4.1 following will apply.

  When the Clear Channel Capability optional feature is installed on an existing facility, the addition will be treated as a discontinuance and start of service and all associated non-recurring charges will apply.

7.2.3 Moves

A move involves a change in the physical location of one of the following:

- The Point of Termination at the customer's premises
- The customer's premises

The charges for the move are dependent on whether the move is to a new location with the same building or to a different building.

(A) Moves Within the Same Building

When the move is to a new location within the same building, the charge for the move will be an amount equal to one half of the nonrecurring (i.e., installation) charge for the service termination affected. There will be no change in the minimum period requirements. This charge is in addition to the Access Order Charge as specified in 17.4.1 following.

APPROVED FOR FILING - THE PUBLIC SERVICE COMMISSION OF SOUTH CAROLINA - JULY 15, 2014

Special Access Service

7.2 Rate Regulations (Cont'd)

7.2.3 Moves (Cont'd)

(B) Moves To a Different Building

Moves to a different building will be treated as a discontinuance and start of service and all associated nonrecurring charges will apply. New minimum period requirements will be established for the new services. The customer will also remain responsible for satisfying all outstanding minimum period charges for the discontinued service.

7.2.4 Minimum Periods

The minimum service period for all services except part-time Video and Program Audio services and DS3 High Capacity Service is one month and the full monthly rate will apply to the first month. Adjustments for the quantities of services established or discontinued in any billing period beyond the minimum period are as set forth in 2.4.1(F) preceding. The minimum service period for part-time Video and Program Audio services is a continuous 24-hour period, not limited to a calendar day. The minimum service period for DS3 High Capacity service is twelve months.

APPROVED FOR FILING - THE PUBLIC SERVICE COMMISSION OF SOUTH CAROLINA - JULY 15, 2014

Special Access Service

7.2 Rate Regulations (Cont'd)

7.2.5 Mileage Measurement

The mileage to be used to determine the monthly rate for the Channel Mileage Facility is calculated on the airline distance between the locations involved, i.e.,

- the serving wire centers associated with two customer designated premises,
- a serving wire center associated with a customer designated premises and a Telephone Company hub,
- two Telephone Company hubs
- or between the serving wire center associated with a customer designated premises and a WATS Serving Office.

The serving wire center associated with a customer designated premises is the serving wire center from which this customer designated premises would normally obtain dial tone.

Mileage charges are shown with each channel type. To determine the rate to be billed, first compute the mileage using the V&H coordinates method, as set forth in the NATIONAL EXCHANGE CARRIER ASSOCIATION, INC. TARIFF F.C.C. NO. 4, then multiply the resulting number of miles times the Channel Mileage Facility per mile rate, and add the Channel Mileage Termination rate for each termination. When the calculation results in a fraction of a mile, always round up to the next whole mile before determining the mileage and applying the rates. When more than one Telephone Company is involved in the provision of service, billing will be accomplished as set forth in 2.4.7 preceding.

APPROVED FOR FILING - THE PUBLIC SERVICE COMMISSION OF SOUTH CAROLINA - JULY 15, 2014

Special Access Service

7.2 Rate Regulations (Cont'd)

7.2.5 Mileage Measurement (Cont'd)

When hubs are involved, mileage is computed and rates applied separately for each section of the Channel Mileage, i.e.,

- customer designated premises serving wire center to hub,
- hub to hub and/or
- hub to customer designated premises serving wire center.

However, when any service is routed through a hub for purposes other than customer specified bridging or multiplexing (e.g., the Telephone Company chooses to so route for test access purposes), rates will be applied only to the distance calculated between the serving wire centers associated with the customer designated premises.

See the service configuration example for multipoint service as set forth in 7.1.3(B) preceding.

7.2.6 Facility Hubs

A customer has the option of ordering Voice Grade service or High Capacity services (i.e., DS1, DS1C, DS2, DS3 or DS4) to a facility hub for channelizing to individual services requiring lower capacity facilities (e.g., Telegraph, Voice, Program Audio, etc.).

Different locations may be designated as hubs for different facility capacities, e.g., multiplexing from digital to digital may occur at one location while multiplexing from digital to analog may occur at a different location. When placing an Access Order the customer will specify the desired hub. NATIONAL EXCHANGE CARRIER ASSOCIATION, INC. TARIFF F.C.C. NO. 4 identifies serving wire centers, hub locations, hub level, (i.e., Hub, Terminus Hub, Intermediate Hub, or Super-Intermediate Hub) and the type of multiplexing functions available. Additionally, subtending wire centers are identified for Intermediate and Super-Intermediate Hubs.

APPROVED FOR FILING - THE PUBLIC SERVICE COMMISSION OF SOUTH CAROLINA - JULY 15, 2014

Special Access Service

7.2 Rate Regulations (Cont'd)

7.2.6 Facility Hubs (Cont'd)

Some of the types of multiplexing available include the following:

- from higher to lower bit rate
- from higher to lower bandwidth
- from high capacity to voice frequency channels.

Point to point services may be provided on channels of these services to a hub. The transmission performance for the point to point service provided between customer designated premises will be that of the lower capacity or bit rate. For example, when a 1.544 Mbps channel is multiplexed to voice frequency channels, the transmission performance of the channelized services will be Voice Grade, not High Capacity.

The Telephone Company will commence billing the monthly rate for the service to the hub on the date specified by the customer on the Access Order. Individual channels utilizing these services may be installed coincident with the installation of the service to the hub or may be ordered and/or installed at a later date, at the option of the customer. The customer will be billed for a Voice Grade or a High Capacity Channel Termination, Channel Mileage (when applicable), and the multiplexer at the time the service is installed. Individual service rates (by service type) will apply for a Channel Termination and additional Channel Mileage (as required) for each channelized service. These will be billed to the customer as each individual service is installed.

Cascading multiplexing occurs when a High Capacity service is de-multiplexed to provide channels with a lesser capacity and one of the lesser capacity channels is further de-multiplexed. For example, a 6.312 Mbps High Capacity service is de-multiplexed to four DS1 channels and then one of the DS1 channels is further de-multiplexed to 24 individual Voice Grade channels.

APPROVED FOR FILING - THE PUBLIC SERVICE COMMISSION OF SOUTH CAROLINA - JULY 15, 2014

Special Access Service

7.2 Rate Regulations (Cont'd)

7.2.6 Facility Hubs (Cont'd)

When cascading multiplexing is performed, whether in the same or a different hub, a charge for the additional multiplexing unit also applies. When cascading multiplexing is performed at different hubbing locations, Channel Mileage charges also apply between the hubs.

The Telephone Company will designate hubs for Program Audio and Video Services. Full-time or part-time service may be provided between customer designated premises or between a customer designated premises and a hub and billed accordingly at the monthly rates set forth in 17.3.5 and 17.3.6 following for a Channel Termination, Channel Mileage and Optional Features and Functions, as applicable. When the service is ordered to a hub, the customer may order full-time or part-time Video and Program Audio services as needed between that hub and additional customer designated premises. The rate elements required to provide the part-time service (i.e., Channel Termination, Channel Mileage and Optional Features and Functions, as applicable) will be billed at daily rates for the duration of the service requested.

APPROVED FOR FILING - THE PUBLIC SERVICE COMMISSION OF SOUTH CAROLINA - JULY 15, 2014

Special Access Service

7.2 Rate Regulations (Cont'd)

7.2.7 Mixed Use Analog and Digital High Capacity Services

Mixed use refers to a rate application applicable only when the customer orders High Capacity Special Access facilities between a customer designated premises and a Telephone Company hub where the Telephone Company performs multiplexing/de-multiplexing functions and the same customer then orders the derived channels as Special and Switched Access Services. If the customer has Switched Access Service between a customer designated premises and an end office that is multiplexed at a Telephone Company hub and subsequently orders the derived channels as Special and Switched Access Service, rates and charges will apply as if the service were ordered as mixed use.

Except as noted above, the High Capacity facility will be ordered, provided and rated as Special Access Service (i.e., Channel Termination, Channel Mileage, as appropriate, and Multiplexing Arrangement). The nonrecurring charge that applies when the mixed use facility is installed will be the nonrecurring charge associated with the appropriate Special Access High Capacity Channel Termination. Rating as Special Access will continue until such time as the customer chooses to use a portion of the available capacity for Switched Access Service. Individual service (i.e., Switched or Special Access) nonrecurring charges will not apply to the individual channels of the mixed use facility.

When Special Access Service is provided utilizing a channel of the mixed use facility to a hub, High Capacity rates and charges will apply for the facility to the hub, as set forth preceding, and individual service rates and charges will apply from the hub to the customer designated premises. The rates and charges that will apply to the portion from the hub to the customer designated premises will be dependent on the specific type of Special Access Service that is provided (e.g., Voice Grade, Telegraph, etc.). The applicable rates and charges will include a Channel Termination and Channel Mileage, if applicable. Rates and charges for optional features and functions associated with the service, if any, will apply for the appropriate channel type.

APPROVED FOR FILING - THE PUBLIC SERVICE COMMISSION OF SOUTH CAROLINA - JULY 15, 2014

Special Access Service

7.2 Rate Regulations (Cont'd)

7.2.7 Mixed Use Analog and Digital High Capacity Services (Cont'd)

As each individual channel is activated for Switched Access Service, the High Capacity Special Access Channel Termination, Channel Mileage, and Multiplexing rates will be reduced accordingly (e.g., 1/24th for a DS1 service, 1/672nd for a DS3 service, etc.).

Switched Access Service rates and charges, as set forth in 17.2 following, will apply for each channel that is used to provide a Switched Access Service. The Switched Access Service Entrance Facility charge, if applicable, will be reduced by multiplying its rate by the ratio of derived Switched Access Service channels to the total number of channels that can be derived. If the Telephone Company is providing Direct Trunked Transport, then the Direct Trunked Transport and Multiplexing Charges will be reduced by multiplying their respective rates by the ratio of derived Direct Trunked Transport channels to the total number of channels that can be derived.

The customer must place an order for each individual Switched or Special Access Service utilizing the Mixed Use Facilities and specify the channel assignment for each such service.

7.2.8 Reserved For Future Use

APPROVED FOR FILING - THE PUBLIC SERVICE COMMISSION OF SOUTH CAROLINA - JULY 15, 2014

Special Access Service

7.3 Surcharge for Special Access Service

7.3.1 General

Special Access Services provided under this tariff may be subject to the monthly Special Access Surcharge.

7.3.2 Application

(A) The Special Access Surcharge will apply to each intrastate Special Access Service that terminates on an end user's PBX or other device, where through a function of the device, the Special Access Service interconnects to the local exchange network. Interconnection functions include, but are not limited to, wiring and software functions, bridging, switching or patching of calls or stations. The Surcharge will apply irrespective of whether the interconnection function is performed in equipment located at the customer's premises or in a Centrex CO-type switch.

(B) Special Access Service will be exempted from the Surcharge by the Telephone Company upon receipt of the customer's written certification for the following Special Access Service terminations:

(1) an open-end termination in a Telephone Company switch of an FX line, including CCSA and CCSA-equivalent ONALs; or

(2) an analog channel termination that is used for radio or television program transmission; or

(3) a termination used for TELEX service; or

(4) a termination that by the nature of its operating characteristics could not make use of Telephone Company common lines such as, terminations which are restricted through hardware or software; or

APPROVED FOR FILING - THE PUBLIC SERVICE COMMISSION OF SOUTH CAROLINA - JULY 15, 2014

Special Access Service

7.3 Surcharge for Special Access Service (Cont'd)

7.3.2 Application (Cont'd)

(B) (Cont'd)

(5) a termination that interconnects either directly or indirectly to the local exchange network where the usage is subject to Carrier Common Line charges such as, where the Special Access Service accesses only FGA and no local exchange lines, or Special Access Service between customer points of termination, or Special Access Service connecting CCSA or CCSA-type equipment (inter-machine trunks); or

(6) a termination that the customer certifies to the Telephone Company is not connected to a PBX or other device which interconnects the Special Access Service to a local exchange subscriber line.

7.3.3 Exemption of Special Access Service

(A) Special Access Services which are terminated as set forth in 7.3.2(B) preceding will be exempted from the Special Access Surcharge if the customer provides the Telephone Company with written exemption certification. The certification may be provided to the Telephone Company as follows:

- at the time the Special Access Service is ordered or installed;

- at such time as the service is reterminated to a device which does not interconnect to the service to local exchange facilities; or

- at such time as the service becomes associated with a Switched Access Service that is subject to Carrier Common Line Charges.

APPROVED FOR FILING - THE PUBLIC SERVICE COMMISSION OF SOUTH CAROLINA - JULY 15, 2014

Special Access Service

7.3 Surcharge for Special Access Service (Cont'd)

7.3.3 Exemption of Special Access Services (Cont'd)

(B) The exemption certification is to be provided by the customer ordering the service. The certification must be signed by the customer or authorized representative and include the category of exemption, as set forth in 7.3.2(B) preceding, for each termination, and the date which the exemption is effective.

(C) The customer shall also notify the Telephone Company when an exempted Special Access Service is changed or reterminated such that the exemption is no longer applicable.

(D) The Telephone Company will work cooperatively with the customer to resolve any questions regarding the exemption certification. In addition, the Telephone Company may withhold exemption of the service until the questions are resolved.

7.3.4 Rate Regulations

(A) The Surcharge will apply as set forth in 7.3.2(A) preceding, except that a surcharge will be assessed on a per voice grade equivalent basis for Special Access Services derived from High Capacity Special Access services as illustrated in the following example:

Special Access Service	Voice Grade Equivalent		Surcharge		Monthly Charge
DS1	24	x	$25	=	$600.00

The preceding example illustrates the maximum number of surcharges applicable to a DS1. If the customer claims exemption(s) as set forth in 7.3.3 preceding or, is not utilizing all available voice grade equivalents and has spare capacity, the number of surcharges would be reduced accordingly.

In the case of multipoint Special Access Services, one Special Access Surcharge will apply for each termination of a Special Access Channel at an end user's premises.

APPROVED FOR FILING - THE PUBLIC SERVICE COMMISSION OF SOUTH CAROLINA - JULY 15, 2014

Special Access Service

7.3 Surcharge for Special Access Service (Cont'd)

7.3.4 Rate Regulations (Cont'd)

(B) The Telephone Company will bill the appropriate Special Access Surcharge to the ordering customer for each intrastate Special Access Service installed unless exemption certification is provided as set forth in 7.3.3 preceding.

(C) If a written certification is not received at the time the Special Access Service is obtained, the Surcharge will be applied. Exempt status will become effective on the certification date indicated by the customer, subject to the regulations set forth in (D) following.

(D) Crediting the Surcharge

The Telephone Company will cease billing the Special Access Surcharge when certification, as set forth in 7.3.3 pre- ceding, is received. If the status of the Special Access Service was changed prior to receipt of the exemption certification, the Telephone Company will credit the customer's account, not to exceed ninety (90) days, based on the effective date of the change as specified by the customer in the letter of certification.

(E) The Special Access Surcharge should not be applied to intrastate WATS and 800/888 services.

APPROVED FOR FILING - THE PUBLIC SERVICE COMMISSION OF SOUTH CAROLINA - JULY 15, 2014

Special Access Service

7.4 Metallic Service

7.4.1 Basic Channel Description

A Metallic channel is an unconditioned two-wire channel arranged to transmit direct current and capable of transmitting low speed varying signals at rates up to 30 baud. This channel is provided by metallic or equivalent facilities. Metallic channels are provided between customer designated premises or between a customer designated premises and a Telephone Company hub or hubs where bridging functions are performed. Interoffice metallic facilities will be limited in length to a total of five miles per channel.

Metallic Special Access Services are typically used for applications such as alarm, pilot wire protective relaying, and dc tripping protective relaying. These examples of applications are not intended to limit a customer's use of the channel nor to imply that the channel is limited to a particular use.

Rates and charges for Special Access Metallic Service are as set forth in 17.3.2 following.

7.4.2 Technical Specifications Packages and Network Channel Interfaces

Technical Specifications Packages are set forth in 15.2.1(A) following. Compatible network channel interfaces are set forth in 15.2.2(C)(1) following.

7.4.3 Optional Features and Functions

Central Office Bridging Capability

(A) Three Premises Bridging-Provision of tip-to-tip and ring-to-ring connection in a central office of a metallic pair to a third customer designated premises.

(B) Series Bridging of up to 26 customer designated premises.

The table set forth in 15.2.1(A) following shows the technical specifications packages with which the optional features and functions are available.

APPROVED FOR FILING - THE PUBLIC SERVICE COMMISSION OF SOUTH CAROLINA - JULY 15, 2014

Special Access Service

7.5 Telegraph Grade Service

7.5.1 Basic Channel Description

Telegraph Grade channel is an unconditioned channel capable of transmitting binary signals at rates of 0-75 baud or 0-150 baud. This channel is furnished for half-duplex or duplex operation. Telegraph Grade channels are provided between customer designated premises or between a customer designated premises and a Telephone Company hub or hubs.

Telegraph Grade Special Access Services are typically used for applications such as teletypewriter, telegraph grade control/remote metering, telegraph grade channel, telegraph grade extension, and telegraph grade entrance facilities. These examples of applications are not intended to limit a customer's use of the channel nor to imply that the channel is limited to a particular use.

Rates and charges for Special Access Telegraph Grade Service are as set forth in 17.3.3 following.

7.5.2 Technical Specifications Packages and Network Channel Interfaces

Technical Specifications Packages are set forth in 15.2.1(B) following. Compatible network channel interfaces are set forth in 15.2.2(C)(2) following.

7.5.3 Optional Features and Functions

Telegraph Bridging (two-wire and four-wire)

The table set forth in 15.2.1(B) following shows the technical specifications packages with which the optional features and functions are available.

APPROVED FOR FILING - THE PUBLIC SERVICE COMMISSION OF SOUTH CAROLINA - JULY 15, 2014

Special Access Service

7.6 Voice Grade Service

7.6.1 Basic Channel Description

A Voice Grade channel is a channel which provides voice frequency transmission capability in the nominal frequency range of 300 to 3000 Hz and may be terminated as two-wire or four-wire. Voice Grade channels are provided between customer designated premises, between a customer designated premises and a Telephone Company hub or hubs, or between a customer designated premises and a WATS Serving Office (WSO).

Voice Grade Special Access Services are typically used for voice and voiceband data applications. Typical examples of voice grade circuits are Foreign Exchange lines (station end only), multipoint private line, voice trunk type, two-point voice grade data, (one-way or simultaneous two-way), multipoint voice grade data, and voice grade telephoto or facsimile. These examples of applications are not intended to limit a customer's use of the channel nor to imply that the channel is limited to a particular use.

Rates and charges for Special Access Voice Grade Service are as set forth in 17.3.4 following.

7.6.2 Technical Specifications Packages and Network Channel Interfaces

Technical Specifications Packages are set forth in 15.2.1(C) following. Compatible network channel interfaces are set forth in 15.2.2(C)(3) following.

7.6.3 Optional Features and Functions

(A) Central Office Bridging Capability

(1) Voice Bridging (two-wire and four-wire)

(2) Data Bridging (two-wire and four-wire)

(3) Telephoto Bridging (two-wire and four-wire)

(4) DATAPHONE Select-A-Station Bridging with sequential arrangement ports or addressable arrangement ports

APPROVED FOR FILING - THE PUBLIC SERVICE COMMISSION OF SOUTH CAROLINA - JULY 15, 2014

Special Access Service

7.6 Voice Grade Service (Cont'd)

7.6.3 Optional Features and Functions (Cont'd)

(A) Central Office Bridging Capability (Cont'd)

(5) Telemetry and Alarm Bridging

Split Band, Active Bridging
Passive Bridging
Summation, Active Bridging

The rates for these options are set forth in 17.3.4(C)(1)(e) following.

(B) Central Office Multiplexing

Voice to Telegraph Grade. An arrangement that converts a Voice Grade channel to Telegraph Grade channels using frequency division multiplexing.

The rate for this option is set forth in 17.3.4(C)(5) following.

(C) Conditioning

Conditioning provides more specific transmission characteristics for Voice Grade services. The rates for these options are set forth in 17.3.4(C) following.

For two-point services, the parameters apply to each service as measured end-to-end. For multipoint services, the parameters apply as measured on each mid-link or as measured on each end link. C-Type conditioning and Data Capability may be combined on the same service.

APPROVED FOR FILING - THE PUBLIC SERVICE COMMISSION OF SOUTH CAROLINA - JULY 15, 2014

Special Access Service

7.6 Voice Grade Service (Cont'd)

7.6.3 Optional Features and Functions (Cont'd)

(C) Conditioning (Cont'd)

(1) C-Type Conditioning

C-Type Conditioning is provided for the additional control of attenuation distortion and envelope delay distortion on data services. The attenuation distortion and envelope delay distortion specifications for C-Type Conditioning are delineated in Technical Reference TR-TSY-000335.

(2) Improved Attenuation Distortion*

Improved Attenuation Distortion upgrades the frequency versus loss limits of the channel. The technical specifications for Improved Attenuation Distortion are delineated in Technical Reference TR-TSY-000335. This option is available only when ordered in combination with C-Type Conditioning.

(3) Improved Envelope Delay Distortion*

Improved Envelope Delay Distortion upgrades the frequency versus delay response limits of the channel. The technical specifications for Improved Envelope Delay Distortion are delineated in Technical Reference TR-TSY-000335. This option is available only when ordered in combination with C-Type Conditioning.

* Improved Attenuation Distortion and Improved Envelope Delay Distortion will continue to be provided to all customers who were provided with either or both of these optional features in conjunction with C-Type Conditioning prior to May 4, 1988.

APPROVED FOR FILING - THE PUBLIC SERVICE COMMISSION OF SOUTH CAROLINA - JULY 15, 2014

Special Access Service

7.6 Voice Grade Service (Cont'd)

7.6.3 Optional Features and Functions (Cont'd)

(C) Conditioning (Cont'd)

(4) Data Capability (D Conditioning)

Data Capability provides transmission characteristics suitable for data communications. Specifically, Data Capability provides for the control of Signal to C-Notched Noise Ratio and intermodulation distortion. It is available for two-point services or three-point multipoint services.

The Signal to C-Notched Noise Ratio and intermodulation distortion parameter for Data Capability are delineated in Technical Reference TR-TSY-000335. The rate for this option is set forth in 17.3.4(C)(2) following.

When a service equipped with Data Capability is used for voice communications, the quality of the voice transmission may not be satisfactory.

(5) Telephoto Capability

Telephoto Capability provides transmission characteristics suitable for telephotographic communications. Specifically, Telephoto Capability is provided for the control of attenuation distortion and envelope delay distortion on telephotographic services. The attenuation distortion and envelope delay distortion parameters for Telephoto Capability are delineated in Technical Reference TR-TSY-000335. The rate for this option is set forth in 17.3.4(C)(2) following.

(6) Sealing Current Conditioning

Sealing Current Conditioning is providing to help maintain continuity on dry metallic loops. It is usually associated with four-wire DA or NO type network channel interfaces.

APPROVED FOR FILING - THE PUBLIC SERVICE COMMISSION OF SOUTH CAROLINA - JULY 15, 2014

Special Access Service

7.6 Voice Grade Service (Cont'd)

7.6.3 Optional Features and Functions (Cont'd)

(D) Customer Specified Premises Receive Level

This option allows the customer to specify the receive level at the Point of Termination. The level must be within a specific range on effective four-wire transmission. The ranges are delineated in Technical Reference TR-TSY-000335. The rate for this option is set forth in 17.3.4(C)(4) following.

(E) Improved Return Loss

(1) On Effective Four-Wire Transmission at Four-Wire Point of Termination (applicable to each two-wire port): Provides for a fixed 600 ohm impedance, variable level range and simplex reversal. Telephone Company equipment is required at the customer's premises where this option is ordered. The Improved Return Loss parameters are delineated in Technical Reference TR-TSY-000335. The rate for this option is set forth in 17.3.4(C)(3) following.

(2) On Effective Two-Wire Transmission at Two-Wire Point of Termination: Provides for more stringent Echo Control specifications. In order for this option to be applicable, the transmission path must be four-wire at one POT and two-wire at the other POT. Placement of Telephone Company equipment may be required at the customer's premises with the two-wire POT. The Improved Return Loss parameters are delineated in Technical Reference TR-TSY-000335. The rate for this option is set forth in 17.3.4(C)(3) following.

APPROVED FOR FILING - THE PUBLIC SERVICE COMMISSION OF SOUTH CAROLINA - JULY 15, 2014

Special Access Service

7.6 Voice Grade Service (Cont'd)

7.6.3 Optional Features and Functions (Cont'd)

(F) Signaling Capability

Signaling Capability provides for the ability to transmit signals from one customer premises to another customer premises on the same service. The rate for this option is set forth in 17.3.4(C)(6) following.

The following network channel interfaces for Voice Grade service do not require signaling capability: AH, DA, DB, DD, DE, DS, NO, PR, and TF.

The following network channel interfaces for Voice Grade service require signaling capability: AB, AC, CT, DX, DY, EA, EB, EC, EX, GO, GS, LA, LB, LC, LO, LR, LS, RV and SF. The signaling capability charge will not apply when used in the provision of WATS access service.

(G) Selective Signaling Arrangement

An arrangement that permits code selective ringing for up to ten codes on a multipoint service. The rate for this option is set forth in 17.3.4(C)(7) following.

APPROVED FOR FILING - THE PUBLIC SERVICE COMMISSION OF SOUTH CAROLINA - JULY 15, 2014

Special Access Service

7.6 Voice Grade Service (Cont'd)

7.6.3 Optional Features and Functions (Cont'd)

(H) Transfer Arrangement

An arrangement that affords the customer an additional measure of flexibility in the use of an access channel(s). The arrangement can be utilized to transfer a leg of a Special Access Service to another channel that terminates in either the same or a different customer premises. A key activated or dial-up control service is required to operate the transfer arrangement. A spare channel, if required, is not included as part of the option. The rate for this option is set forth in 17.3.4(C)(8) following.

(I) Public Packet Switching Network (PPSN) Interface Arrangement

An arrangement that provides the interface requirements that permit a Voice Grade service to interface with a Public Packet Switching Network packet switch located in a Telephone Company premises. The interface is compatible with X.25 and X.75 packet switching protocols as defined by the CCITT. This option is provided on an Individual Case Basis as set forth in 17.3.4(C)(9) following.

(J) Four-Wire/Two-Wire Conversions

When a customer requests that an effective four-wire channel be terminated with a two-wire channel interface at the customer designated premises, a four-wire to two-wire conversion is required. The customer will be charged the four-wire Channel Termination rate as set forth in 17.3.4(A) following when an effective four-wire is specified in the order for service. The rate for the conversion is included as part of the basic four-wire Channel Termination rate.

APPROVED FOR FILING - THE PUBLIC SERVICE COMMISSION OF SOUTH CAROLINA - JULY 15, 2014

Special Access Service

7.6 Voice Grade Service (Cont'd)

7.6.3 Optional Features and Functions (Cont'd)

(K) Improved Two-Wire Voice Transmission

(1) Loss Deviation

The maximum Loss Deviation of the 1004 Hz loss relative to the Expected Measured Loss (EML) is -4.0 dB to +4.0 dB.

(2) Attenuation Distortion

The maximum Attenuation Distortion in the 404 to 280 Hz frequency band relative to loss at 1004 HZ is -2.0 dB to +6.0 dB.

(3) C-Message Noise

The maximum C-Message Noise for the transmission path at the route miles listed is less than:

Route Miles	C-Message Noise
less than 50	35 dBrnco
51 to 100	37 dBrnco
101 to 200	40 dBrnco
201 to 400	43 dBrnco
401 to 1000	45 dBrnco

(4) Return Loss

The Return Loss, expressed as Echo Return Loss (ERL) and Singing Return Loss (SRL), is equal to or greater than:

ERL	13.0 dB
SRL	6.0 dB

The rate for the provision of Improved Two-Wire Voice Transmission is included as part of the basic Channel Termination rate.

APPROVED FOR FILING - THE PUBLIC SERVICE COMMISSION OF SOUTH CAROLINA - JULY 15, 2014

Special Access Service

7.7 Program Audio Service

7.7.1 Basic Channel Description

A Program Audio channel is a channel with bandwidth measured in Hz for the transmission of a complex signal voltage. The actual bandwidth is a function of the channel interface selected by the customer. Only one-way transmission is provided. Program Audio channels are provided between customer designated premises or between a customer designated premises and a Telephone Company hub or hubs.

Program Audio Special Access services are typically used in full-time and part-time applications for radio broadcasting, noncommercial educational audio, and wired music. These examples of applications are not intended to limit a customer's use of the channel nor to imply that the channel is limited to a particular use.

Rates and charges for Special Access Program Audio Service are as set forth in 17.3.5 following.

7.7.2 Technical Specifications Packages and Network Channel Interfaces

Technical Specifications Packages are set forth in 15.2.1(D) following. Compatible network channel interfaces are set forth in 15.2.2(C)(4) following.

7.7.3 Optional Features and Functions

(A) Central Office Bridging Capability

Distribution Amplifier

(B) Gain Conditioning

Control of 1004 Hz AML at initiation of service to 0dB ± 0.5 dB.

APPROVED FOR FILING - THE PUBLIC SERVICE COMMISSION OF SOUTH CAROLINA - JULY 15, 2014

Special Access Service

7.7 Program Audio Service (Cont'd)

7.7.3 Optional Features and Functions (Cont'd)

(C) Stereo

Provision of a pair of gain/phase equalized channels for stereo applications. (An additional Program Audio channel must be ordered separately.)

The table set forth in 15.2.1(D) following shows the technical specifications packages with which the optional features and functions are available.

APPROVED FOR FILING - THE PUBLIC SERVICE COMMISSION OF SOUTH CAROLINA - JULY 15, 2014

Special Access Service

7.8 Video Service

7.8.1 Basic Channel Description

A Video channel is a channel with one-way transmission capability for a standard 525 line/60 field monochrome, or National Television Systems Committee color, video signal and one or two associated 5 or 15 kHz audio signal(s). The associated audio signal(s) may be either diplexed or provided as one or two separate channels. The provision and the bandwidth of the associated audio signal(s) is a function of the channel interface selected by the customer. Video channels are provided between customer designated premises or between a customer designated premises and a Telephone Company hub or hubs.

Rates and charges for Special Access Video Service are as set forth in 17.3.6 following.

7.8.2 Technical Specifications Packages and Network Channel Interfaces

Technical Specifications Packages are set forth in 15.2.1(E) following. Compatible network channel interfaces are set forth in 15.2.2(C)(5) following.

The following network channel interfaces (NCIs) define the bandwidth and the provision of the audio signal(s) associated with a Video channel:

NCI	Audio Bandwidth	Provision
2TV6-1	15kHz	1 Channel, diplexed
2TV6-2	15kHz	2 Channels, diplexed
2TV7-1	15kHz	1 Channel, diplexed
2TV7-2	15kHz	2 Channels, diplexed
4TV6-5	5kHz	1 Channel, separate
4TV6-15	15kHz	1 Channel, separate
4TV7-5	5kHz	1 Channel, separate
4TV7-15	15kHz	1 Channel, separate
6TV6-5	5kHz	2 Channels, separate
6TV6-15	15kHz	2 Channels, separate
6TV7-5	5kHz	2 Channels, separate
6TV7-15	15kHz	2 Channels, separate

APPROVED FOR FILING - THE PUBLIC SERVICE COMMISSION OF SOUTH CAROLINA - JULY 15, 2014

Special Access Service

7.9 Digital Data Service

7.9.1 Basic Channel Description

A Digital Data Channel is a channel for duplex four-wire transmission of synchronous serial data at the rate of 2.4, 4.8, 9.6, 19.2, 56 or 64.0* Kbps. The actual bit rate is a function of the channel interface selected by the customer. The channel provides a synchronous service with timing provided by the Telephone Company through the Telephone Company's facilities to the customer in the received bit stream. Digital Data channels are provided as either hubbed or non-hubbed services between customer designated premises and a Telephone Company hub or hubs. The hubs providing hubbed digital service and the wire centers providing non-hubbed digital service are identified in National Exchange Carrier Association, Inc., Wire Center Information, Tariff F.C.C. No. 4.

The customer may provide the Channel Service Unit-type equipment or other Network Channel Terminating Equipment associated with the Digital Data channel at the customer premises.

The Telephone Company will provide a channel capable of meeting a monthly average performance equal to or greater than 99.875% error-free seconds (if provided through a Digital Data hub) while the channel is in service, if it is measured through a CSU equivalent which is designed, manufactured, and maintained to conform with the specifications contained in Technical Reference PUB 62310.

Rate and charges for Special Access Digital Data Service are as set forth in 17.3.7 following.

(*) When 64.0 Kbps service is multiplexed on a DS1 High Capacity service, the DS1 must be equipped to provide Clear Channel Capability.

APPROVED FOR FILING - THE PUBLIC SERVICE COMMISSION OF SOUTH CAROLINA - JULY 15, 2014

Special Access Service

7.9 Digital Data Service

7.9.2 Technical Specifications Packages and Network Channel Interfaces

Technical Specifications Packages are set forth in 15.2.1(F) following. Compatible channel interfaces are set forth in 15.2.2(C)(6) following.

The following network channel interfaces (NCIs) define the bit rates that are available for a Digital Data channel:

NCI	Bit Rate
DU-24	2.4 Kbps
DU-48	4.8 Kbps
DU-96	9.6 Kbps
DU-19	19.2 Kbps
DU-56	56.0 Kbps
DU-64	64.0 Kbps

APPROVED FOR FILING - THE PUBLIC SERVICE COMMISSION OF SOUTH CAROLINA - JULY 15, 2014

Special Access Service

7.11 Digital Data Service (Cont'd)

7.9.3 Optional Features and Functions

The Optional Features and Functions described in (A), (B), and (C) following are only available where Digital Data Service is provided via hub. The Optional Features and Functions described in (D) following are available where Digital Data Service is provided on a non-hubbed basis.

(A) Central Office Bridging Capability

Bridging is not available on a 64.0 Kbps Channel.

(B) Transfer Arrangement

An arrangement that affords the customer an additional measure of protection and/or flexibility in the use of their access channel(s) on a 1xN basis. The arrangement can be utilized to transfer a leg of a Special Access Service to either a spare or working channel that terminates in either the same or a different customer designated premises. This arrangement is only available at a Telephone Company designated hub. A key activated or dial-up control service is required to operate the transfer arrangement. A spare channel, if required, is not included as a part of the option.

(C) Public Packet Switching Network (PPSN) Interface Arrangement

An arrangement that provides the interface requirements that permit a Digital Data Service to interface with a Public Packet Switching Network packet switch located in a Telephone Company premises. The interface is compatible with X.25 and X.75 packet switching protocols as defined by the CCITT.

The table set forth in 15.2.1(F) following shows the technical specifications packages with which the optional features and functions are available.

APPROVED FOR FILING - THE PUBLIC SERVICE COMMISSION OF SOUTH CAROLINA - JULY 15, 2014

Special Access Service

7.10 High Capacity Service

7.10.1 Basic Channel Description

A High Capacity channel is a channel for the transmission of nominal 64.0 Kbps* or 1.544, 3.152, 6.312, 44.736, or 274.176 Mbps isochronous serial data. The actual bit rate is a function of the channel interface selected by the customer. High Capacity channels are provided between customer designated premises or between a customer designated premises and a Telephone Company hub or hubs.

The customer may provide the Network Channel Terminating Equipment associated with the High Capacity channel at the customer's premises.

A channel with technical specifications package HC1 will be capable of an error-free second performance of 98.75% over a continuos 24 hour period as measured at the 1.544 Mbps rate through a CSU equivalent which is designed, manufactured, and maintained to conform with the specifications contained in Technical Reference PUB 62411.

Rates and charges for Special Access High Capacity Service are as set forth in 17.3.8 following.

* Available only as a channel of a 1.544 Mbps facility to a Telephone Company Digital Data hub or as a cross connect of two 2.4, 4.8, 9.6, 56.0 or 64.0 Kbps channels of two 1.544 Mbps facilities to a Digital Data hub(s). The customer must provide system and channel assignment data.

(x) Transcribed from 15.2.1(G) following.

APPROVED FOR FILING - THE PUBLIC SERVICE COMMISSION OF SOUTH CAROLINA - JULY 15, 2014

Special Access Service

7.10 High Capacity Service (Cont'd)

7.10.2 Technical Specifications Packages and Network Channel Interfaces

Technical Specifications Packages are set forth in 15.2.1(G) following. Compatible channel interfaces are set forth in 15.2.2(C)(7) following.

The following network channel interfaces (NCIs) define the bit rates that are available for a High Capacity channel:

NCI	Bit Rate
DS-15*	1.544 Mbps (DS1)
DS-27	274.176 Mbps (DS4)
DS-31	3.152 Mbps (DS1C)
DS-44	44.736 Mbps (DS3)
DS-63	6.312 Mbps (DS2)

* A 64.0 Kbps channel is available as a channel(s) of a 1.544 Mbps channel to a Telephone Company hub.

APPROVED FOR FILING - THE PUBLIC SERVICE COMMISSION OF SOUTH CAROLINA - JULY 15, 2014

Special Access Service

7.10 High Capacity Service (Cont'd)

7.10.3 Optional Features and Functions

(A) Automatic Loop Transfer

The Automatic Loop Transfer provides protection on a lxN basis against failure of the facilities between a customer designated premises and the wire center serving that premises. Protection is furnished through the use of a switching arrangement that automatically switches to a spare channel line when a working line fails. The spare channel is not included as a part of the option. This option requires compatible equipment at both the serving wire center and the customer designated premises. The customer is responsible for providing the equipment at its designated premises. Equipment at the customer designated premises will be provided under tariff only if it existed in the Telephone Company inventory as of November 18, 1983.

(B) Transfer Arrangement

An arrangement that affords the customer an additional measure of flexibility in the use of their access channel(s). The arrangement can be utilized to transfer a leg of a Special Access Service to either a spare or working channel that terminates in either the same or a different customer designated premises. A key activated or dial-up control service is required to operate the transfer arrangement. A spare channel, if required, is not included as part of the option.

APPROVED FOR FILING - THE PUBLIC SERVICE COMMISSION OF SOUTH CAROLINA - JULY 15, 2014

Special Access Service

7.10 High Capacity Service (Cont'd)

7.10.3 Optional Features and Functions (Cont'd)

(C) Central Office Multiplexing

(1) DS4 to DS1

An arrangement that converts a 274.176 Mbps channel to 168 DS1 channels using digital time division multiplexing.

(2) DS3 to DS1

An arrangement that converts a 44.736 Mbps channel to 28 DS1 channels using digital time division multiplexing.

(3) DS2 to DS1
An arrangement that converts a 6.312 Mbps channel to four DS1 channels using digital time division multiplexing.

(4) DS1C to DS1

An arrangement that converts a 3.152 Mbps channel to two DS1 channels using digital time division multiplexing.

(5) DS1 to Voice

An arrangement that converts a 1.544 Mbps channel to 24 channels for use with Voice Grade Services. A channel(s) of this DS1 to the Hub can also be used for a Digital Data Service.

(6) DS1 to DSO

An arrangement that converts a 1.544 Mbps channel to 23 64.0 Kbps channels utilizing digital time division multiplexing.

APPROVED FOR FILING - THE PUBLIC SERVICE COMMISSION OF SOUTH CAROLINA - JULY 15, 2014

Special Access Service

7.10 High Capacity Service (Cont'd)

7.10.3 Optional Features and Functions (Cont'd)

(C) Central Office Multiplexing (Cont'd)

(7) DSO to Subrate

An arrangement that converts a 64.0 Kbps channel to subspeeds of up to twenty 2.4 Kbps, ten 4.8 Kbps, or five 9.6 Kbps channels using digital time division multiplexing.

The table set forth in 15.2.1(G) following shows the technical specifications packages with which the optional features and functions are available.

(D) Clear Channel Capability (CCC)

(1) CCC is an arrangement that allows a customer to transport 1.536 Mbps information rate signals over a 1.544 Mbps High Capacity channel or over a 1.544 Mbps High Capacity channel derived from a multiplexed 44.736 Mbps High Capacity channel with no constraint on the quantity or sequence of one and zero bits. This arrangement requires the customer signal at the channel interface to conform to Bipolar with Eight Zero Substitution (B8ZS) line code as described in Technical Reference TR-NPL-000054 and Technical Reference TR-INS-000342.

(2) CCC is provided, subject to availability of facilities, on DS1/1.544 Mbps High Capacity channels* between two customer designated premises and on multiplexed DS3/44.736 Mbps High Capacity channels or multiplexed DS1/1.544 Mbps High Capacity channels* between a Telephone Company hub office and a customer designated premises. The wire centers providing CCC are identified in NATIONAL EXCHANGE CARRIER ASSOCIATION, INC., WIRE CENTER INFORMATION, TARIFF F.C.C. NO. 4.

* Available only on a DS1-to-Digital multiplexed configuration.

APPROVED FOR FILING - THE PUBLIC SERVICE COMMISSION OF SOUTH CAROLINA - JULY 15, 2014

Special Access Service

7.10 High Capacity Service (Cont'd)

7.10.3 Optional Features and Functions (Cont'd)

(D) Clear Channel Capability (CCC) (Cont'd)

(3) The CCC optional feature may be ordered at the same time the High Capacity service is ordered or it may be ordered as an addition to an existing High Capacity Service. The customer must agree to out-of-service periods required to add this feature to an existing High Capacity Service. The charges for the CCC optional feature are as set forth in 7.2.2(C) (3) preceding.

7.11 Individual Case Filings

Certain services set forth in Special Access Service, Section 7. are provided on an Individual Case Basis. Rates and charges for Special Access Service provided on an Individual Cases Basis are set forth in 17.3.9 following.

APPROVED FOR FILING - THE PUBLIC SERVICE COMMISSION OF SOUTH CAROLINA - JULY 15, 2014

Reserved For Future Use

CONTENTS

Page No.

APPROVED FOR FILING - THE PUBLIC SERVICE COMMISSION OF SOUTH CAROLINA - JULY 15, 2014

Reserved For Future Use

APPROVED FOR FILING - THE PUBLIC SERVICE COMMISSION OF SOUTH CAROLINA - JULY 15, 2014

Directory Assistance Service

CONTENTS

			Page No.
9.1	General Description		1
	9.1.1	Description and Provision of Directory Assistance Service	2
	9.1.2	Ordering Options and Conditions	3
	9.1.3	Rate Categories	5
	9.1.4	Special Facilities Routing	8
	9.1.5	Design Layout Report	9
9.2	Undertaking of the Telephone Company		9
	9.2.1	Number of Telephone Number Requests	9
	9.2.2	Telephone Number Availability	9
	9.2.3	Selection of DA Locations	10
	9.2.4	Transmission Specifications	10
	9.2.5	Testing	11
	9.2.6	Determination of Number of Transmission Paths	11
	9.2.7	Supervisory Signaling	11
9.3	Obligations of the Customer		12
	9.3.1	Jurisdictional Reports	12
	9.3.2	Supervisory Signaling	12
	9.3.3	Ordering of Separate Trunk Groups	13
	9.3.4	Notice of Discontinuance of Service	13
9.4	Rate Regulations		14
	9.4.1	Nonrecurring Charges	14
	9.4.2	Directory Assistance Service Call Charge	15
	9.4.3	Directory Transport Service	15
	9.4.4	Minimum Periods	16
	9.4.5	Minimum Monthly Charge	16
	9.4.6	DA Service Rearrangements	17
	9.4.7	Moves	17
	9.4.8	Credit Allowance for Service Outages and Incorrect Numbers	17

APPROVED FOR FILING - THE PUBLIC SERVICE COMMISSION OF SOUTH CAROLINA - JULY 15, 2014

Directory Assistance Service

The Telephone Company will provide Directory Assistance (DA) Service to a customer from Directory Assistance Service locations (DA location). DA locations are either primary or subtending. Primary DA locations are those to which terminating DA calls for the NPA first complete. Primary DA location either process the telephone number request or, if necessary, forward the call to a subtending DA location for processing. DA service rates are assessed by the primary DA location only. Subtending DA locations are compensated by contractual arrangements between Telephone Companies.

9.1 General Description

Telephone Company provided DA Service is available to customers for their use in furnishing DA services to end users. It provides for the use of Directory Access Service between the premises of the ordering customer and the DA location(s), use of DA access equipment, and use of DA operators to provide telephone numbers.

Directory Access Service will be provided between the customer designated premises and the DA location by the Telephone Company. Rates and charges for Directory Assistance Service are set forth in 17.2.4 following.

APPROVED FOR FILING - THE PUBLIC SERVICE COMMISSION OF SOUTH CAROLINA - JULY 15, 2014

Directory Assistance Service

9.1 General Description (Cont'd)

9.1.1 Description and Provision of Directory Assistance Service

A Telephone Company DA operator, when furnished a name and locality, will provide or attempt to provide the telephone number listed in the Telephone Company DA records associated with the name given, at the rates and charges as set forth in 17.2.5 following. The Telephone Company's contact with the customer's end user shall be limited to that effort necessary to process a customer's end user's request for a telephone number; and the Telephone Company will not transfer, forward or redial a customer's end user call to any other location for any purpose other than provision of DA Service.

Each Directory Access Service will consist of the following:

- An Interface Group equipped with an available Premises Interface as set forth in 15.3.1 following at the customer's designated premises.

- Directory Transport between the premises of the ordering customer and the DA location.

When required by the Telephone Company, a separate Directory Access Service trunk group will be provided for DA Service for each NPA. Separate trunk groups will be required when the Telephone Company notifies the customer that the mechanized search of its data base and its mechanized operator practices require a mechanized identification of the NPA code for which the customer's end user desires DA information.

Further, when an access tandem is available and is provided, the Directory Access Service will be provided, at customer choice:

- as a separate Directory Access Service trunk group, or

- in combination with Feature Group B, C or D Switched Access Service.

APPROVED FOR FILING - THE PUBLIC SERVICE COMMISSION OF SOUTH CAROLINA - JULY 15, 2014

Directory Assistance Service

9.1 General Description (Cont'd)

9.1.2 Ordering Options and Conditions

(A) Ordering

Except as set forth following, Directory Assistance Service provided under a Special Order is subject to the ordering conditions as set forth in Section 5. preceding. The customer shall determine and order the busy hour minutes of capacity and interface type of Directory Access Services it needs for DA Service.

When DA Service is initially ordered, the customer shall order the service for at least six months. Thereafter, additional service may be ordered for a minimum of six months. Not later than three months prior to the end of the six month period, the customer shall notify the Telephone Company if the service is to be discontinued at the end of the six month period. If no notice is received from the customer, the Telephone Company will automatically extend the service for another six months and all appropriate charges as set forth in 17.2.5 following will apply for another six months.

APPROVED FOR FILING - THE PUBLIC SERVICE COMMISSION OF SOUTH CAROLINA - JULY 15, 2014

Directory Assistance Service

9.1 General Description (Cont'd)

9.1.2 Ordering Options and Conditions (Cont'd)

(B) Cancellation of a Special Order

A customer may cancel a Special Order for DA Service on any date prior to the service date. The cancellation date is the date the Telephone Company receives written or verbal notice from the customer that the Special Order is to be cancelled. The verbal notice must be followed by written confirmation within 10 days.

When a customer cancels a Special Order for DA Service after the order date but prior to the start of service, the appropriate application of charges as set forth in Section 5. preceding apply for the Directory Access Service cancelled. In addition, a charge equal to any unrecoverable capital costs incurred by the Telephone Company will apply to the customer.

(C) Changes to Special Orders

When a customer requests changes to a pending order for DA Service, such changes will be undertaken if they can be accommodated by the Telephone Company. The appropriate application of charges as set forth in Section 5. preceding apply for the Directory Access Service changed. In addition, a charge equal to any other costs incurred by the Telephone Company because of the change will apply.

APPROVED FOR FILING - THE PUBLIC SERVICE COMMISSION OF SOUTH CAROLINA - JULY 15, 2014

Directory Assistance Service

9.1 General Description (Cont'd)

9.1.3 Rate Categories

There are two rate categories which apply to Directory Assistance Service:

- Directory Assistance Service Call
- Directory Transport Service

(A) Directory Assistance Service Call

The Directory Assistance Service Call rate category provides for the use of general DA Services such as operators and DA access equipment necessary to provide DA Service to a customer.

(B) Directory Transport Service

Directory Transport Service provides the transmission facilities and transport termination between the premises of the ordering customer and the DA location. For purposes of determining Directory Transport Mileage, distance will be measured from the wire center that normally serves the customer premises to the DA location(s).

Directory Transport is a two-way voice frequency transmission path composed of Switched Access Local Transport facilities as set forth in 6.1.3 preceding. The two-way voice frequency path transports calls in the terminating direction (from the premises of the ordering customer to the DA location). The following rate elements, which are more fully described in 6.1.3(A) preceding, are applicable.

APPROVED FOR FILING - THE PUBLIC SERVICE COMMISSION OF SOUTH CAROLINA - JULY 15, 2014

Directory Assistance Service

9.1 General Description (Cont'd)

9.1.3 Rate Categories (Cont'd)

(B) Directory Transport Service (Cont'd)

- Entrance Facility for the transport of the DA call from the customer's premises to the serving wire center of that premises.

- Direct Trunked Transport (i.e., Direct Trunked Facility and Direct Trunked Termination) for the transport of the DA call from the customer's serving wire center to the DA location without switching at a tandem or from the serving wire center to the tandem.

- Tandem Switched Transport (i.e., Tandem Switched Facility, Tandem Switched Termination, and Tandem Switching) for the transport of the DA call from the customer's serving wire center to the DA location with switching at a tandem, or from the tandem to the DA location.

- Residual Interconnection Charge for the Local Transport costs that are not recovered by the Entrance Facility, Direct Trunked Transport, Tandem Switched Transport, Multiplexing, or dedicated signaling (i.e., SS7) rates.

- Multiplexing DS3 to DS1 Multiplexing charges apply when a High Capacity DS3 Entrance Facility or Direct Trunked Facility is connected with High Capacity DS1 Direct Trunked Transport. The DS3 to DS1 multiplexer will convert a 44.736 Mbps channel to 28 DS1 channels using digital time division multiplexing.

APPROVED FOR FILING - THE PUBLIC SERVICE COMMISSION OF SOUTH CAROLINA - JULY 15, 2014

Directory Assistance Service

9.1 General Description (Cont'd)

9.1.3 Rate Categories (Cont'd)

(B) Directory Transport Service (Cont'd)

DS1 to Voice Grade Multiplexing charges apply when a High Capacity DS1 Entrance Facility or Direct Trunked Facility is connected with Voice Grade Direct Trunked Transport. A DS1 to Voice Grade Multiplexing charge does not apply when a High Capacity DS1 Direct Trunked Facility is terminated at an electronic end office and only Switched Access Service is provided over the DS1 facility (i.e., Voice Grade Special Access channels are not derived). The DS1 to voice multiplexer will convert a 1.544 Mbps channel to 24 Voice Grade channels.

Multiplexing is only available at wire centers identified in NATIONAL EXCHANGE CARRIER ASSOCIATION, INC., TARIFF F.C.C. NO. 4, WIRE CENTER INFORMATION.

The customer will specify whether the Directory Access Service is to be routed directly to a DA location or through an access tandem switch appropriately equipped for DA measurement and served by DA trunks to the DA location when such an access tandem switch is available. The combination of Feature Group B, C or D Switched Access Service with DA Service will only be provided at such available and appropriately equipped access tandem switches.

APPROVED FOR FILING - THE PUBLIC SERVICE COMMISSION OF SOUTH CAROLINA - JULY 15, 2014

Directory Assistance Service

9.1 General Description (Cont'd)

9.1.3 Rate Categories (Cont'd)

(B) Directory Transport Service (Cont'd)

When Directory Transport is provided using a Direct Trunked Transport to the DA location, no address signaling is provided. When Directory Transport is provided with the use of an access tandem switch, wink start-start pulsing signaling is provided at the access tandem switch. When access tandem routing is provided, the customer shall address each call to the DA location using NPA + 555 + 1212 or when required by the Telephone Company, 555-1212. Only NPA codes handled by the DA location served by the access tandem switch will be processed.

Directory Transport is provided with one of the Local Transport Interface Groups as set forth in 15.1.1 following.

9.1.4 Special Facilities Routing

A customer may request that Directory Access Service be provided via Special Facilities Routing. The regulations, rates and charges for Special Facility Routing (Avoidance, Diversity and Cable Only) are as set forth in 11. following.

APPROVED FOR FILING - THE PUBLIC SERVICE COMMISSION OF SOUTH CAROLINA - JULY 15, 2014

Directory Assistance Service

9.1 General Description (Cont'd)

9.1.5 Design Layout Report

The Telephone Company will provide to the customer the makeup of the facilities and services provided under this section as Directory Access Service. This information will be provided in the form of a Design Layout Report similar to that set forth in 6.1.5 preceding. Design Layout Reports for Directory Access Service will be provided only when specifically requested by the customer. The Design Layout Report will be provided to the customer at no charge, and will be reissued or updated whenever the facilities provided for the customer's use are materially changed.

9.2 Undertaking of the Telephone Company

9.2.1 Number of Telephone Number Requests

A maximum of two (2) requests for telephone numbers will be accepted per call to Directory Assistance and DA operators will not transfer, forward or redial the call to another location for any purpose other than the provision of DA Service.

9.2.2 Telephone Number Availability

A telephone number which is not listed in DA records will not be available to the customer's end user.

APPROVED FOR FILING - THE PUBLIC SERVICE COMMISSION OF SOUTH CAROLINA - JULY 15, 2014

Directory Assistance Service

9.2 Undertaking of the Telephone Company (Cont'd)

9.2.3 Selection of DA Locations

The Telephone Company will specify the DA location which provides the DA Service for each numbering plan area code (NPA). The DA locations are as shown in NATIONAL EXCHANGE CARRIER ASSOCIATION, INC. , TARIFF F.C.C. No. 4.

When it becomes necessary to change a DA location, as determined by the Telephone Company, the Telephone Company will notify the involved customers six months prior to the change. For such changes, the regulations as set forth in 2.1.7 preceding apply.

9.2.4 Transmission Specifications

Each Directory Assistance Service transmission path is provided with standard transmission specifications, either Type A or B, as set forth respectively in 15.1.2(E) and (F) following. The specifications associated with the parameters are guaranteed to the DA location. The standard for a particular transmission path is dependent upon the following:

- Whether Directory Access Service is provided in combination with Feature Group B, C or D Switched Access Service, or

- When not provided in combination with Switched Access Service, whether routed direct or via an access tandem switch.

The available transmission specifications are set forth in 15.3.2 following.

APPROVED FOR FILING - THE PUBLIC SERVICE COMMISSION OF SOUTH CAROLINA - JULY 15, 2014

Directory Assistance Service

9.2 Undertaking of the Telephone Company (Cont'd)

9.2.5 Testing

(A) Acceptance Testing

The acceptance testing capabilities for Directory Access Service traffic routed through an access tandem are the same as those for the associated Feature Group C or D end office switching. The acceptance testing for Directory Access Service traffic routed directly, or routed in separate trunk groups through an access tandem to the DA location will be the same as that for Switched Access Service as set forth in 6.2.4 preceding.

(B) Routine Testing

Routine testing capabilities for Directory Access Service traffic routed through an access tandem are the same as those for the associated Feature Group C or D end office switching. Routine testing capabilities for Directory Access Service traffic routed directly, or routed in a separate trunk group through an access tandem, to the DA location, will be as set forth in 13.3.1(A)(3) following (Additional Manual Testing).

9.2.6 Determination of Number of Transmission Paths

The number of Directory Transport transmission paths provided is based on the customer's order and is determined by the Telephone Company in a manner similar to Switched Access Service transmission paths as set forth in 6.2.5 preceding.

9.2.7 Supervisory Signaling

Trunk side switching is provided at the DA Service access location. The DA Service access location will provide trunk answer and disconnect supervisory signaling.

APPROVED FOR FILING - THE PUBLIC SERVICE COMMISSION OF SOUTH CAROLINA - JULY 15, 2014

Directory Assistance Service

9.3 Obligations of the Customer

In addition to the obligations of the customer as set forth in Section 2. preceding, the customer has certain specific obligations concerning the use of Directory Assistance Service. These obligations are as follows:

9.3.1 Jurisdictional Reports

Directory Transport may, at the option of the customer, be provided for both interstate and intrastate communications. When the customer requests such mixed access, the intrastate Directory Transport charges will be determined by the Telephone Company using the data furnished by the customer as set forth in 2.3.11 preceding.

9.3.2 Supervisory Signaling

The customer facilities at the premises of the ordering customer shall provide the necessary on-hook and off-hook supervision.

APPROVED FOR FILING - THE PUBLIC SERVICE COMMISSION OF SOUTH CAROLINA - JULY 15, 2014

Directory Assistance Service

9.3 Obligations of the Customer (Cont'd)

9.3.3 Ordering of Separate Trunk Groups

When requested by the Telephone Company, the customer shall order a separate trunk group for DA Service for each NPA. The conditions when the customer will be requested to order separate trunk groups for each NPA are set forth in 9.1.1 preceding.

9.3.4 Notice of Discontinuance of Service

DA Service is ordered and renewed for a minimum period of six months at a time, as set forth in 9.1.2(A) preceding. Not later than three months prior to the end of any six month period, the customer shall notify the Telephone Company if the service is to be discontinued at the end of that period.

APPROVED FOR FILING - THE PUBLIC SERVICE COMMISSION OF SOUTH CAROLINA - JULY 15, 2014

Directory Assistance Service

9.4 Rate Regulations

This section contains the specific regulations governing rates and charges that apply for Directory Assistance Service.

9.4.1 Nonrecurring Charges

Nonrecurring charges for DA Service are one-time charges that apply for a specific work activity (i.e., installation, change to an existing service and DA Service rearrangements).

(A) Installation of Service

Nonrecurring Local Transport Installation and Direct Trunked Transport Activation charges as set forth in 17.2.1(A) and (E) following are applied as set forth in 6.4.1(B)(1) preceding to each Directory Access Service installed.

(B) DA Service Rearrangements

All changes to existing services other than changes involving administrative activities will be treated as a discontinuance of the existing service and an installation of a new service.

APPROVED FOR FILING - THE PUBLIC SERVICE COMMISSION OF SOUTH CAROLINA - JULY 15, 2014

Directory Assistance Service

9.4 Rate Regulations (Cont'd)

9.4.2 Directory Assistance Service Call Charge

The Directory Assistance service call charge, as set forth in 17.2.5(A) following, applies for each call to DA Service. A call is a call which has been answered by a DA operator. The charge applies whether or not the DA operator provides the requested telephone number. The number of calls answered by DA operators will be accumulated by Telephone Company measuring equipment. A credit for the provision of an incorrect telephone number will be applied as set forth in 9.4.8 following.

9.4.3 Directory Transport Service

The premium Local Transport charges set forth in 17.2 following are also applicable to Directory Transport Service and will be assessed on the same basis as the Switched Access Local Transport rate elements set forth in 6.1.3(A) preceding:

- Entrance Facility
- Direct Trunked Transport
- Tandem Switched Transport
- Multiplexing
- Residual Interconnection Charge

APPROVED FOR FILING - THE PUBLIC SERVICE COMMISSION OF SOUTH CAROLINA - JULY 15, 2014

Directory Assistance Service

9.4 Rate Regulations (Cont'd)

9.4.4 Minimum Periods

The minimum period for which DA Service and the Directory Access Service is provided and for which charges apply is six months. A minimum period of six months applies for each additional period of service ordered or extended.

If DA Service is discontinued prior to the end of each six month period, the charges that apply for the remaining months are the non-recoverable costs. Such costs include the non-recoverable cost of equipment and material ordered, provided or used, plus the non-recoverable cost of installation and removal including the costs of engineering, labor supervision, transportation, rights-of-way and other associated costs less estimated net salvage.

The minimum period for which High Capacity DS3 Entrance Facilities or High Capacity DS3 Direct Trunked Transport is provided is twelve months.

9.4.5 Minimum Monthly Charge

DA service is subject to a minimum monthly charge. The minimum monthly charge is calculated as follows:

The minimum monthly charge for Directory Assistance Service calls is the charge as set forth in 17.2.5(A) following for the actual usage for the month.

For the Directory Transport rate element, the minimum monthly charge the customer will be assessed will be the usage charges based on actual usage. For flat rated Directory Transport rate elements, the minimum monthly charge is the sum of the recurring charges prorated to the number of days or major fraction of days based on a 30 day month. Rates for Directory Transport are set forth in 17.2.2 following.

APPROVED FOR FILING - THE PUBLIC SERVICE COMMISSION OF SOUTH CAROLINA - JULY 15, 2014

Directory Assistance Service

9.4 Rate Regulations (Cont'd)

9.4.6 DA Service Rearrangements

Nonrecurring charges apply for service rearrangements. Service rearrangements and the regulations concerning the application of associated nonrecurring charges are as set forth in 6.4.1(B)(3) preceding.

9.4.7 Moves

A move involves a change in the physical location of the point of termination at the customer designated premises or of the customer designated premises. Moves will be treated as set forth in 6.4.4 preceding and all associated nonrecurring charges will apply. Minimum period requirements will be established at the new location as set forth in 6.4.4 preceding. The customer will also remain responsible for satisfying all outstanding minimum period charges for the discontinued service.

9.4.8 Credit Allowance for Service Outages and Incorrect Numbers

(A) When the DA location or DA operator equipment or terminals are out of service due to a Telephone Company equipment failure a credit allowance is provided. When an incorrect number is provided and a customer DA call has been answered by a DA operator, a credit allowance is provided. The credit allowance provided is equal to the rate for a Directory Assistance Service Call as set forth in 17.2.5(A) following. The credit will be applied to the customer's charges.

APPROVED FOR FILING - THE PUBLIC SERVICE COMMISSION OF SOUTH CAROLINA - JULY 15, 2014

Directory Assistance Service

9.4 Rate Regulations (Cont'd)

9.4.8 Credit Allowances for Service Outages and Incorrect Numbers (Cont'd)

(B) In addition to the credit as set forth in (A) preceding, when a DA operator or DA equipment provides an incorrect number for a call and the customer reports such occurrences to the Telephone Company, a credit allowance for the Switched Access portion of the call in the originating LATA of such DA call will apply. The credit will be as set forth in (C) following. When the customer reports such a call and the number requested, the number provided and the reason the number provided is incorrect, the number of calls for which a credit will apply will be developed by the Telephone Company in cooperation with the customer.

(C) When a DA call is not completed due to the failure of Directory Access Service to DA locations, DA access equipment or DA operator activities, a credit allowance for the Switched Access Service portion in the originating LATA of such DA call will apply. When the customer reports such a call and DA number dialed, time of the call and the date of the call, the number of calls for which a credit will apply will be developed by the Telephone Company in cooperation with the customer. The credit will be as set forth in 17.2.5(C) following. Credit allowances for other services interruptions will be provided as set forth in 2.4.4 preceding.

APPROVED FOR FILING - THE PUBLIC SERVICE COMMISSION OF SOUTH CAROLINA - JULY 15, 2014

Reserved For Future Use

CONTENTS

Page No.

APPROVED FOR FILING - THE PUBLIC SERVICE COMMISSION OF SOUTH CAROLINA - JULY 15, 2014

Reserved For Future Use

APPROVED FOR FILING - THE PUBLIC SERVICE COMMISSION OF SOUTH CAROLINA - JULY 15, 2014

Special Facilities Routing of Access Services

CONTENTS

		Page No.
11.1	Description	1
11.1.1	Diversity	1
11.1.2	Avoidance	1
11.1.3	Diversity and Avoidance Combined	1
11.1.4	Cable-Only Facilities	1

APPROVED FOR FILING - THE PUBLIC SERVICE COMMISSION OF SOUTH CAROLINA - JULY 15, 2014

Special Facilities Routing of Access Services

11.1 Description

The services provided under this tariff are provided over such routes and facilities as the Telephone Company may elect. Special Facilities Routing is involved when, in order to comply with requirements specified by the customer, the Telephone Company provides Switched Access Service, Special Access Service or Special Federal Government Access Service in a manner which includes one or more of the following conditions:

11.1.1 Diversity

Two or more circuits must be provided over not more than two different physical routes.

11.1.2 Avoidance

A circuit(s) must be provided on a route which avoids specified geographical locations.

11.1.3 Diversity and Avoidance Combined

11.1.4 Cable-Only Facilities

Certain Voice Grade services are provided on Cable-Only Facilities to meet the particular needs of a customer.

Service is provided subject to the availability of Cable-Only facilities. In the event of service failure, restoration will be made through the use of any available facilities as selected by the Telephone Company.

Avoidance and Diversity are available on Switched Access Service as set forth in Section 6. preceding; Metallic, Telegraph Grade and Voice Grade Special Access Services as set forth respectively in 7.4, 7.5 and 7.6 preceding and Special Federal Government Access Services as set forth in 10.5 preceding. Cable-Only Facilities are available for Switched Access Service as set forth in Section 6. preceding; Voice Grade Special Access Services as set forth in 7.6 preceding and Special Federal Government Access Services as set forth in 10.5 preceding.

APPROVED FOR FILING - THE PUBLIC SERVICE COMMISSION OF SOUTH CAROLINA - JULY 15, 2014

Specialized Service or Arrangements

CONTENTS

		Page No.
12.1	General	1

APPROVED FOR FILING - THE PUBLIC SERVICE COMMISSION OF SOUTH CAROLINA - JULY 15, 2014

Specialized Service or Arrangements

12.1 General

Specialized Service or Arrangements may be provided by the Telephone Company, at the request of a customer, on an individual case basis if such service or arrangements meet the following criteria:

- The requested service or arrangements are not offered under other sections of this tariff.

- The facilities utilized to provide the requested service or arrangements are of a type normally used by the Telephone Company in furnishing its other services.

- The requested service or arrangements are provided within a LATA.

- The requested service or arrangements are compatible with other Telephone Company services, facilities, and its engineering and maintenance practices.

- This offering is subject to the availability of the necessary Telephone Company personnel and capital resources.

Rates and charges and additional regulations if applicable, for Specialized Service or Arrangements are provided on an individual case basis and are as set forth in 17.4.7 following.

APPROVED FOR FILING - THE PUBLIC SERVICE COMMISSION OF SOUTH CAROLINA - JULY 15, 2014

Additional Engineering, Additional Labor and Miscellaneous Services

CONTENTS

		Page No.
13.1	Additional Engineering	1
13.2	Additional Labor	2
	13.2.1 Overtime Installation	2
	13.2.2 Overtime Repair	2
	13.2.3 Stand by	2
	13.2.4 Testing and Maintenance with Other Telephone Companies	2
	13.2.5 Other Labor	2
13.3	Miscellaneous Services	3
	13.3.1 Testing Services	3
	13.3.2 Maintenance of Service	10
	13.3.3 Telecommunications Service Priority (TSP)	10
	13.3.4 Miscellaneous Equipment	12
13.4	InterLATA Presubscription	13
13.5	IntraLATA Presubsription	16
13.6	Reserved For Future Use	17
13.7	Reserved for Future Use	17
13.8	Blocking Service	18
	13.8.1 Reserved for Future Use	18
	13.8.2 900 Blocking Service	18
13.9	Billing Name and Address Service	20
	13.9.1 General Description	20
	13.9.2 Undertaking of the Telephone Company	20
	13.9.3 Obligations of the Customer	21
	13.9.4 Rate Regulations	22
13.10	Provision of Access Service Billing Information	23
13.11	Originating Line Screening (OLS) Service	24
13.12	Coin Supervision Additive Service	25

APPROVED FOR FILING - THE PUBLIC SERVICE COMMISSION OF SOUTH CAROLINA - JULY 15, 2014

Additional Engineering, Additional Labor and Miscellaneous Services

Section 13.1 addresses Additional Engineering. Section 13.2 addresses Additional Labor (which is comprised of Overtime Installation, Overtime Repair, Standby, Testing and Maintenance with Other Telephone Companies, and Other Labor). Section 13.3 addresses Miscellaneous Services (which are comprised of Testing Services, Maintenance of Service and Telecommunications Service Priority). Section 13.4 addresses Presubscription. Section 13.8 addressed Blocking Service. Section 13.9 addressed Billing Name and Address Service. Section 13.10 addresses the Provision of Access Service Billing Information.

In this section, normally scheduled working hours are an employee's scheduled work period in any given calendar day (e.g., 8:00 a.m. to 5:00 p.m.) for the application of rates based on working hours.

A Miscellaneous Service Order Charge as described in 5.4.2 preceding may be applicable to services ordered from this section.

13.1 Additional Engineering

Additional Engineering, including engineering reviews as set forth in 5.4.3 preceding, will be undertaken only after the Telephone Company has notified the customer that additional engineering charges apply as set forth in 17.4.2 following, and the customer agrees to such charges.

Additional Engineering will be provided by the Telephone Company at the request of the customer only when:

(A) A customer requests additional technical information after the Telephone Company has already provided the technical information normally included on the Design Layout Report (DLR) as set forth in 6.1.5 and 7.1.6 preceding.

(B) Additional Engineering time is incurred by the Telephone Company to engineer a customer's request for a customized service as set forth in 7.1.2 preceding.

(C) A customer requested Design Change requires the expenditure of Additional Engineering time. Such additional engineering time is incurred by the Telephone Company for the engineering review as set forth in 5.4.3 preceding. The charge for additional engineering time relating to the engineering review, which is undertaken to determine if a design change is indeed required, will apply whether or not the customer authorizes the Telephone Company to proceed with the Design Change. In this case the Design Change charge, as set forth in 17.4.1(B) following, does not apply unless the customer authorizes the Telephone Company to proceed with the Design Change.

APPROVED FOR FILING - THE PUBLIC SERVICE COMMISSION OF SOUTH CAROLINA - JULY 15, 2014

Additional Engineering, Additional Labor and Miscellaneous Services

13.2 Additional Labor

Additional Labor is that labor requested by the customer on a given service and agreed to by the Telephone Company as set forth in 13.2.1 through 13.2.5 following. The Telephone Company will notify the customer that Additional Labor charges as set forth in 17.4.3 following will apply before any additional labor is undertaken. A call-out of a Telephone Company employee at a time not consecutive with the employee's scheduled work period is subject to a minimum charge of four hours. When provisioning or restoring Telecommunications Service Priority services, the Telephone Company will, when possible, notify the customer of the applicability of these Additional Labor charges.

13.2.1 Overtime Installation

Overtime installation is that Telephone Company installation effort outside of normally scheduled working hours.

13.2.2 Overtime Repair

Overtime repair is that Telephone Company effort performed outside of normally scheduled working hours.

13.2.3 Standby

Standby includes all time in excess of one-half (1/2) hour during which Telephone Company personnel standby to make installation acceptance tests or cooperative tests with a customer to verify facility repair on a given service.

13.2.4 Testing and Maintenance with Other Telephone Companies

Additional testing, maintenance or repair of facilities which connect other telephone companies is that which is in addition to the normal effort required to test, maintain or repair facilities provided solely by the Telephone Company.

13.2.5 Other Labor

Other labor is that additional labor not included in 13.2.1 through 13.2.4 preceding and labor incurred to accommodate a specific customer request that involves only labor which is not covered by any other section of this tariff.

APPROVED FOR FILING - THE PUBLIC SERVICE COMMISSION OF SOUTH CAROLINA - JULY 15, 2014

Additional Engineering, Additional Labor and Miscellaneous Services

13.3 Miscellaneous Services

13.3.1 Testing Services

Testing Services offered under this section of the tariff are optional and subject to rates and charges as set forth in 17.4.4 following. A call-out of a Telephone Company employee at a time not consecutive with the employee's scheduled work period is subject to a minimum charge of four hours. Other testing services, as described in 6.2.4 and 7.1.7 preceding, are provided by the Telephone Company in association with Access Services and are furnished at no additional charge.

Testing Services are normally provided by Telephone Company personnel at Telephone Company locations; however, provisions are made in (B) (2) following for a customer to request Telephone Company personnel to perform Testing Services at the customer designated premises.

The offering of Testing Services under this section of the tariff is made subject to the availability of the necessary qualified personnel and test equipment at the various test locations mentioned in (A) and (B) following.

(A) Switched Access Service

Testing Services for Switched Access are comprised of (a) tests which are performed during the installation of a Switched Access Service, (i.e., Acceptance Tests), (b) tests which are performed after customer acceptance of such access services and which are without charge (i.e., routine testing) and (c) additional tests which are performed during or after customer acceptance of such access services and for which additional charges apply, (i.e., Additional Cooperative Acceptance Tests and in-service tests).

APPROVED FOR FILING - THE PUBLIC SERVICE COMMISSION OF SOUTH CAROLINA - JULY 15, 2014

Additional Engineering, Additional Labor and Miscellaneous Services

13.3 Miscellaneous Services (Cont'd')

13.3.1 Testing Services (Cont'd)

(A) Switched Access Service (Cont'd)

Routine tests are those tests performed by the Telephone Company on a regular basis, as set forth in 6.2.4 preceding which are required to maintain Switched Access Service. Additional in-service tests may be done on an automatic basis (no Telephone Company or customer technicians involved), on a manual basis [Telephone Company technician(s) involved at Telephone Company office(s) and Telephone Company or customer technician(s) involved at the customer designated premises].

Testing services are ordered to the Dial Tone Office for FGA, to the access tandem or end office for FGB (wherever the FGB service is ordered) and to the end office for FG's C and D. Testing Services for Directory Assistance Service not routed through an access tandem is ordered to a Directory Assistance Location for each NPA.

(1) Additional Cooperative Acceptance Testing

Additional Cooperative Acceptance Testing of Switched Access Service involves the Telephone Company provision of a technician at its office(s) and the customer provision of a technician at its premises, with suitable test equipment to perform the required tests.

Additional Cooperative Acceptance Tests may, for example, consist of the following tests:

- Impulse Noise
- Phase Jitter
- Signal to C-Notched Noise Ratio
- Intermodulation (Nonlinear) Distortion
- Frequency Shift (Offset)
- Envelope Delay Distortion
- Dial Pulse Percent Break

APPROVED FOR FILING - THE PUBLIC SERVICE COMMISSION OF SOUTH CAROLINA - JULY 15, 2014

Additional Engineering, Additional Labor and Miscellaneous Services

13.3 Miscellaneous Services (Cont'd)

13.3.1 Testing Services (Cont'd)

(A) Switched Access Service (Cont'd)

(2) Additional Automatic Testing

Additional Automatic Testing (AAT) of Switched Access Services (Feature Groups B, C and D), is a service where the customer provides remote office test lines and 105 test lines with associated responders or their functional equivalent. The customer may order, at additional charges, gain-slope and C-notched noise testing and may order the routine tests (1004 Hz loss, C-Message Noise and Balance) on an as-needed or more than routine schedule.

The Telephone Company will provide an AAT report that lists the test results for each trunk tested. Trunk test failures requiring customer participation for trouble resolution will be provided to the customer on an as-occurs basis.

The Additional Tests, (i.e., gain slope, C-notched noise, 1004 Hz loss, C-message noise and balance) may be ordered by the customer at additional charges, 60 days prior to the start of the customer prescribed schedule. The rates for Additional Automatic Tests are as set forth in 17.4.4(B) following.

APPROVED FOR FILING - THE PUBLIC SERVICE COMMISSION OF SOUTH CAROLINA - JULY 15, 2014

Additional Engineering, Additional Labor and Miscellaneous Services

13.3 Miscellaneous Services (Cont'd)

13.3.1 Testing Services (Cont'd)

(A) Switched Access Service (Cont'd)

(3) Additional Manual Testing

Additional Manual Testing (AMT) of Switched Access Services (Feature Groups A, B, C, and D and Directory Access Service not routed through an access tandem), is a service where the Telephone Company provides a technician at its office(s) and the Telephone Company or customer provides a technician at the customer designated premises, with suitable test equipment to perform the required tests. Such additional tests will normally consist of gain-slope and C-notched noise testing. However, the Telephone Company will conduct any additional tests which the IC may request.

The Telephone Company will provide an AMT report listing the test results for each trunk tested. Trunk test failures requiring customer participation for trouble resolution will be provided to the customer on a per occurrence basis.

The Additional Manual Tests may be ordered by the customer at additional charges, 60 days prior to the start of the testing schedule as mutually agreed to by the customer and the Telephone Company.

The rates for Additional Manual Testing are as set forth in 17.4.4(C) following.

APPROVED FOR FILING - THE PUBLIC SERVICE COMMISSION OF SOUTH CAROLINA - JULY 15, 2014

Additional Engineering, Additional Labor and Miscellaneous Services

13.3 Miscellaneous Services (Cont'd)

13.3.1 Testing Services (Cont'd)

(A) Switched Access Service (Cont'd)

(4) Obligations of the Customer

(A) The customer shall provide the Remote Office Test Line priming data to the Telephone Company, as appropriate, to support routine testing as set forth in 6.2.4(B) preceding or AAT as set forth in 13.3.1(A)(2) preceding.

(B) The customer shall make the facilities to be tested available to the Telephone Company at times mutually agreed upon.

APPROVED FOR FILING - THE PUBLIC SERVICE COMMISSION OF SOUTH CAROLINA - JULY 15, 2014

Additional Engineering, Additional Labor and Miscellaneous Services

13.3 Miscellaneous Services (Cont'd)

13.3.1 Testing Services (Cont'd)

(B) Special Access Service

The Telephone Company will provide assistance in performing specific tests requested by the customer.

(1) Additional Cooperative Acceptance Testing

When a customer provides a technician at its premises or at an end user's premises, with suitable test equipment to perform the requested tests, the Telephone Company will provide a technician at its office for the purpose of conducting Additional Cooperative Acceptance Testing on Voice Grade Services. At the customers' request, the Telephone Company will provide a technician at the customer's premises or at the end user premises. These tests may, for example, consist of the following:

- Attenuation Distortion (i.e., frequency response)
- Intermodulation Distortion (i.e., harmonic distortion)
- Phase Jitter
- Impulse Noise
- Envelope Delay Distortion
- Echo Control
- Frequency Shift

APPROVED FOR FILING - THE PUBLIC SERVICE COMMISSION OF SOUTH CAROLINA - JULY 15, 2014

Additional Engineering, Additional Labor and Miscellaneous Services

13.3 Miscellaneous Services (Cont'd)

13.3.1 Testing Services (Cont'd)

(B) Special Access Service (Cont'd)

(2) Additional Manual Testing

The Telephone Company will provide a technician at its premises, and the Telephone Company or customer will provide a technician at the customer's designated premises with suitable test equipment to perform the requested tests.

(3) Obligation of the Customer

When the customer subscribes to Testing Service as set forth in this section, the customer shall make the facilities to be tested available to the Telephone Company at times mutually agreed upon.

APPROVED FOR FILING - THE PUBLIC SERVICE COMMISSION OF SOUTH CAROLINA - JULY 15, 2014

Additional Engineering, Additional Labor and Miscellaneous Services

13.3 Miscellaneous Services (Cont'd)

13.3.2 Maintenance of Service

(A) When a customer reports a trouble to the Telephone Company for clearance and no trouble is found in the Telephone Company's facilities, the customer shall be responsible for payment of a Maintenance of Service charge as set forth in 17.4.4(F) following for the period of time from when Telephone Company personnel are dispatched, at the request of the customer, to the customer designated premises to when the work is completed. Failure of Telephone Company personnel to find trouble in Telephone Company facilities will result in no charge if the trouble is actually in those facilities, but not discovered at the time.

(B) The customer shall be responsible for payment of a Maintenance of Service charge when the Telephone Company dispatches personnel to the customer designated premises, and the trouble is in equipment or communications systems provided by other than the Telephone Company or in detariffed CPE provided by the Telephone Company.

In either (A) or (B) preceding, no credit allowance will be applicable for the interruption involved if the Maintenance of Service Charge applies.

13.3.3 Telecommunications Service Priority - TSP

(A) Priority installation and/or restoration of National Security Emergency Preparedness (NSEP) telecommunications services shall be provided in accordance with Part 64.401, Appendix A, of the Federal Communications Commission's (FCC's) Rules and Regulations.

In addition, TSP System service shall be provided in accordance with the guidelines set forth in "Telecommunications Service Priority (TSP) System for National Security Emergency Preparedness (NSEP) Service Vendor Handbook" (NCSH 3-1-2) dated October 9, 1990, and "Telecommunications Service Priority System for National Security Emergency Preparedness Service User Manual" (NCSM 3-1-1).

APPROVED FOR FILING - THE PUBLIC SERVICE COMMISSION OF SOUTH CAROLINA - JULY 15, 2014

Additional Engineering, Additional Labor and Miscellaneous Services

13.3 Miscellaneous Services (Cont'd)

13.3.3 Telecommunications Service Priority - TSP (Cont'd)

(A) (Cont'd)

The TSP System is a service, developed to meet the requirements of the Federal Government, as specified in the Service Vendor's Handbook and Service User's Manual which provides the regulatory, administrative and operational framework for the priority installation and/or restoration of NSEP telecommunications services. These include both Switched and Special Access Services. The TSP System applies only to NSEP telecommunications services, and requires and authorizes priority action by the Telephone Company providing such services.

For Switched Access Service, the TSP System's applicability is limited to those services which the Telephone Company can discreetly identify for priority provisioning and/or restoration.

(B) A Telecommunications Service Priority charge applies as set forth in 17.4.4 when a request to provide or change a Telecommunications Service Priority is received subsequent to the issuance of an Access Order to install the service.

Additionally, a Miscellaneous Service Order Charge as set forth in 17.4.1 will apply to Telecommunications Service Priority requests that are ordered subsequent to the initial installation of the associated access service.

A Telecommunications Service Priority charge does not apply when a Telecommunications Service Priority is discontinued or when ordered coincident with an Access Order to install or change service.

In addition, Additional Labor rates as set forth in 17.4.3 may be applicable when provisioning or restoring Switched or Special Access Services with Telecommunications Service Priority.

When the customer requests an audit or a reconciliation of the Telephone Company's Telecommunications Service Priority records, a Miscellaneous Service Order Charge as set forth in 17.4.1 (D) and Additional Labor rates as set forth in 17.4.3 are applicable.

APPROVED FOR FILING - THE PUBLIC SERVICE COMMISSION OF SOUTH CAROLINA - JULY 15, 2014

Additional Engineering, Additional Labor and Miscellaneous Services

13.3 Miscellaneous Services (Cont'd)

13.3.4 Miscellaneous Equipment

(A) Controller Arrangement

This arrangement enables the customer to control up to 48 transfer functions at a Telephone Company central office via a remote keyboard terminal capable of either 300 or 1200 bps operation. Included as part of the Controller Arrangement is a dial-up data station located at the Telephone Company Central Office to provide access to the Controller Arrangement. This dial-up data station consists of a 212A DATAPHONE data set and an appropriate Telephone Company provided channel.

The Controller Arrangement must be located in the same Telephone Company central office as the transfer functions which it controls.

Charges for the Controller Arrangement are set forth in 17.4.4(H) following.

APPROVED FOR FILING - THE PUBLIC SERVICE COMMISSION OF SOUTH CAROLINA - JULY 15, 2014

Additional Engineering, Additional Labor and Miscellaneous Services

13.4 InterLATA Presubscription (Cont'd)

Pursuant to the Federal Communications Commission's Memorandum Opinion and Order, CC Docket No. 83-1145, Phase I, adopted May 31, 1985, and released August 302, 1985, the Allocation Plan, outlined in the Appendix B of this Order, will be available for inspection in the Public Reference Room of the Tariff Division at the Federal Communications Commission's Washington D.C., location or may be obtained from the Commission's commercial contractor.

(A) Presubscription is the process by which end user customers may select and designate to the Telephone Company an IC to access, without an access code, for interLATA, intrastate calls. This IC is referred to as the end user's predesignated IC.

(B) On the effective date of this tariff, all existing end users have access to intrastate MTS/WATS. No later than 85 days prior to conversion to Feature Group D in a serving end office, the Telephone Company will notify end users of the availability of equal access in their particular area. The notification will include the names of all ICs wishing to participate in the presubscription process. This notification will be sent via U.S. Mail to each end user of record served by the end office to be converted.

(C) End users may select one of the following options at no charge:

- indicate a primary IC for all of its lines,
- indicate a different IC for each of its lines.

Only one IC may be selected for each line or lines terminating in the same hunt group.

End users may designate that they do not want to presubscribe to any IC. The end user must arrange this designation by directly notifying the Telephone Company's business office. This choice will require the end user to dial an access code (10XXX or 101XXXX) for all intrastate calls.

After the end user's initial selection of a predesignated IC or the designation that they do not want to presubscribe to any IC, for any change in selection after conversion to Equal Access in the serving end office, a nonrecurring charge, as set forth in 17.4.4(I) following applies.

APPROVED FOR FILING - THE PUBLIC SERVICE COMMISSION OF SOUTH CAROLINA - JULY 15, 2014

Additional Engineering, Additional Labor and Miscellaneous Services

13.4 InterLATA Presubscription (Cont'd)

(D) End users not responding to the initial notification will be sent a second notification for the selection of a predesignated IC no earlier than 40 days prior to or no later than 90 days after the conversion to Equal Access in a serving end office. This second notification will indicate the primary IC that has been assigned to them if they fail to respond to the second notification.

After the allocation process has been completed, end users assigned to an IC via the allocation process may change their IC one time within six months after conversion to Equal Access in the serving end office at no charge.

Following the six month period after conversion to Equal Access for any change in selection, a nonrecurring charge as set forth in 17.4.4(I) following, applies.

(E) When an end user indicates more than one IC selection on the return notification or returns an illegible return notification, the Telephone Company will contact the end user for clarification. If the end user indicates an IC selection on the return notification that does not match with information provided by an IC and both notifications indicate the same authorization date, the end user's notification takes precedence and the Telephone Company will process the end user's selection. In the event that two or more ICs provide to the Telephone Company notifications with the same authorization date and neither notification has been processed, the Telephone Company will contact the end user for clarification. A list of these end users in conflict must be sent to the affected IC by the Telephone Company.

In the event that two or more ICs have provided to the Telephone Company notifications with the same authorization date(s), and one IC notification has already been processed by the Telephone Company, those IC notifications not yet processed would be returned to the ICs.

APPROVED FOR FILING - THE PUBLIC SERVICE COMMISSION OF SOUTH CAROLINA - JULY 15, 2014

Additional Engineering, Additional Labor and Miscellaneous Services

13.4 InterLATA Presubscription (Cont'd)

(F) New end users who are served by end offices equipped with Feature Group D will be asked to presubscribe to an IC at the time they place an order with the Telephone Company for Telephone Exchange Service. They may select either of the following options. There will be no charge for this initial selection.

- designate a primary IC for all of its lines,
- designate a different IC for each of its lines.

Only one IC may be selected for each individual line, or lines terminating in the same hunt group. Subsequent to the installation of Telephone Exchange Service and after the end user's initial selection of a predesignated IC, for any change in selection, a nonrecurring charge, as set forth in 17.4.4(I) following, applies.

(G) If the new end user fails to designate an IC as its predesignated IC prior to the date of installation of Telephone Exchange Service, the Telephone Company will (1) allocate the end user to an IC based upon current IC presubscription ratios, (2) require the end user to dial an access code (10XXX or 101XXXX) for all intrastate calls, or (3) block the end user from intrastate calling. The end user will be notified which option will be applied if they fail to presubscribe to an IC. An allocated or blocked end user may designate another, or initial, IC as its predesignated IC one time at no charge, if it is requested within six months after the installation of Telephone Exchange Service.

For any change in selection after 6 months from the installation of Telephone Exchange Service, a nonrecurring charge, as set forth in 17.4.4(I) following applies.

APPROVED FOR FILING - THE PUBLIC SERVICE COMMISSION OF SOUTH CAROLINA - JULY 15, 2014

Additional Engineering, Additional Labor and Miscellaneous Services

13.4 InterLATA Presubscription (Cont'd)

(H) If an IC elects to discontinue its Feature Group D service offering prior to or within 2 years of the conversion, the IC will notify the Telephone Company of the cancellation. The IC will also notify all end users which selected them that they are cancelling their service and that they should contact the Telephone Company to select a new primary IC. The IC will also inform the end user that it will pay the presubscription change charge. The cancelling IC will then be billed by the Telephone Company the appropriate charge for each end user for a period of two years from the discontinuance of Feature Group D service.

(I) If an IC elects to change or discontinue use of a Carrier Identification Code (CIC) for any reason other than those set forth in (H) above, the IC will identify to the Telephone Company any affected end users and advise the Telephone Company of the new CIC to be assigned to these end users. If the CIC change involves a change of carrier for any end users, the IC will notify the affected end users of the change. The Telephone Company will change the predesignated carrier code of each end user identified by the IC to the new CIC and bill the IC the nonrecurring charge set forth in 17.4.4(I) following for each end user line or trunk that is changed.

13.5 IntraLATA Presubscription

(A) IntraLATA Presubscription (ILP) is a procedure whereby an end user may select and designate to the Telephone Company an interexchange Carrier (IC) for intraLATA toll calls without dialing an access code. The end user may designate an IC for intraLATA toll, a different IC for interLATA toll, or the same IC for both. This IC is referred to as the end users primary IC and is defined by a unique Carrier Identification Code (CIC) shown on the customer service record. Selection of an intraLATA IC by an end user is subject to the terms and conditions following.

(B) Existing end users may exercise an initial free presubscription choice. If the end user is unable to make an affirmative choice for an intraLATA IC at the time of ILP implementation that end user will default to the Primary Toll Carrier (PTC). The initial free choice must be made within 90 days following implementation of ILP, any changes made after initial selection will be subject to a nonrecurring charge as set forth in Section 17.4.4(I).

New end users who subscribe to service after the presubscription implementation date will be asked to select a primary IC, at no charge, when they place an order for Telephone Company Exchange Service. If a customer cannot decide upon an intraLATA IC, the customer will be assigned a 'No-PIC' and will have to dial an access code to make intraLATA toll calls. The initial free selection must be made within 90 days following implementation of ILP, any changes made after initial selection will be subject to a nonrecurring charge as set forth in Section 17.4.4(I).

(C) In the event that two or more ICs have provided to the Telephone Company notifications with the same authorization date(s), and one IC notification has already been processed by the Telephone Company, those IC notifications not yet processed would be returned to the ICs.

APPROVED FOR FILING - THE PUBLIC SERVICE COMMISSION OF SOUTH CAROLINA - JULY 15, 2014

Additional Engineering, Additional Labor and Miscellaneous Services

13.5 IntraLATA Presubscription (Cont'd)

(D) If an IC elects to discontinue its Feature Group D service offering prior to or within 2 years of the conversion, the IC will notify the Telephone Company of the cancellation. The IC will also notify all end users which selected them that they are canceling their service and that they should contact the Telephone Company to select a new primary IC. The IC will also inform the end user that it will pay the presubscription change charge. The canceling IC will then be billed by the Telephone Company the appropriate charge for each end user for a period of two years from the discontinuance of Feature Group D service.

(E) If an IC elects to change or discontinue use of a Carrier Identification Code (CIC) for any reason other than those set forth in (E) above, the IC will identify to the Telephone Company any affected end users and advise the Telephone Company of the new CIC to be assigned to these end users. If the CIC change involves a change of carrier for any end users, the IC will notify the affected end users of the change. The Telephone Company will change the predesignated carrier code of each end user identified by the IC to the new CIC and bill the IC the nonrecurring charge set forth in Section 17.4.4(M) following for each end user line or trunk that is changed.

(F) ILP costs shall be recovered from each IC, operating in the state, calculated using their monthly originating intrastate switched access minutes of use over a three year period. The monthly charge for cost recovery is set forth in Section 17.4.4(I)(1) following.

13.6 Reserved For Future Use

13.7 Reserved For Future Use

APPROVED FOR FILING - THE PUBLIC SERVICE COMMISSION OF SOUTH CAROLINA - JULY 15, 2014

Additional Engineering, Additional Labor and Miscellaneous Services

13.8 Blocking Service

13.8.1 Reserved For Future Use

13.8.2 900 Blocking Service

The Telephone Company will provide 900 Blocking Service to customers who obtain local exchange service from the Telephone Company under its general or local exchange tariffs and to customers who obtain Feature Group A Switched Access service under this tariff. This service is only provided at appropriately equipped end offices. Those offices providing 900 Blocking Service are identified in NATIONAL EXCHANGE CARRIER ASSOCIATION, INC. TARIFF F.C.C. NO. 4.

APPROVED FOR FILING - THE PUBLIC SERVICE COMMISSION OF SOUTH CAROLINA - JULY 15, 2014

Additional Engineering, Additional Labor and Miscellaneous Services

13.8 Blocking Service (Cont'd)

13.8.2 900 Blocking Service (Cont'd)

On each line or trunk for which 900 Blocking Service is ordered, the Telephone Company will block all direct dialed calls placed to a 900 number. When capable, the Telephone Company will route the blocked calls to a recorded message.

A Blocking Service charge as set forth in 17.4.4(K) following is applicable when ordered by the end user customer with the following exception:

- Blocking access to 900 Service is offered to all subscribers at no charge at the time telephone service is established at a new number and for 60 days thereafter.

The Blocking Service charge is applied for each line, trunk or Feature Group A Switched Access service to which 900 Blocking Service is added or removed. Requests by subscribers to remove 900 Blocking Service must be in writing. This charge does not apply when blocking is removed from an exchange line or trunk or Feature Group A Switched Access line at the same time that it is disconnected.

APPROVED FOR FILING - THE PUBLIC SERVICE COMMISSION OF SOUTH CAROLINA - JULY 15, 2014

Additional Engineering, Additional Labor and Miscellaneous Services

13.9 Billing Name and Address Service

13.9.1 General Description

(A) Billing Name and Address (BNA) Service is the provision by the Telephone Company to an intrastate service provider who is a customer of the Telephone Company of the complete billing name, street address, city or town, state and zip code for a telephone number or calling card account number assigned by the Telephone Company. An intrastate service provider is defined as an interexchange carrier, an operator service provider, an enhanced service provider or any other provider of intrastate telecommunications services.

(B) BNA Service is provided only for the purposes of allowing customers to bill their end users for telephone services provided by the customer, order entry and customer service information, fraud prevention, identification of end users who have moved to a new address, any purpose associated with equal access requirement, and information associated with Local Exchange Carrier (LEC) calling card calls, collect calls and third party calls.

BNA information may not be resold or used for any other purpose including, but not limited to, marketing or merchandising activities.

(C) BNA information associated with listed/published telephone numbers will be provided. Requests for BNA information associated with non-published and unlisted telephone numbers will be provided, unless the subscriber to a nonpublished or unlisted telephone number has affirmatively requested that its BNA not be disclosed.

13.9.2 Undertaking of the Telephone Company

(A) A standard format for the receipt of BNA requests and the provision of BNA information will be established by the Telephone Company.

APPROVED FOR FILING - THE PUBLIC SERVICE COMMISSION OF SOUTH CAROLINA - JULY 15, 2014

Additional Engineering, Additional Labor and Miscellaneous Services

13.9 Billing Name and Address Service (Cont'd)

13.9.2 Undertaking of the Telephone Company (Cont'd)

(B) Standard response to BNA requests will be by First Class Mail. Standard format will be on paper. Optional Magnetic Tape formatting will be offered where available.

(C) Where facilities are available, the customer may request an optional specialized output format required to meet a specific customer need.

(D) The Telephone Company will make every effort to provide accurate and complete BNA data. The Telephone Company makes no warranties, expressed or implied, as to the accuracy or completeness of this information.

(E) The Telephone Company will not disclose BNA information to parties other than intrastate service providers and their authorized billing agents as defined in 13.9.1(A) preceding. BNA disclosure is limited to those purposes as defined in 13.9.1(B) preceding.

(F) The Telephone Company reserves the right to request from an intrastate service provider who has placed an order for BNA service, the source data upon which the interexchange carrier has based the order. This request is made to ensure that the BNA information is to be used only for purposes as described in 13.9.1(B) preceding. The Telephone Company will not process the order until such time as the intrastate service provider supplies the requested data.

13.9.3 Obligations of the Customer

(A) The customer shall order BNA Service on a separate BNA Order. The order must identify both the customer's authorized representative and the address to which the information is to be sent.

APPROVED FOR FILING - THE PUBLIC SERVICE COMMISSION OF SOUTH CAROLINA - JULY 15, 2014

Additional Engineering, Additional Labor and Miscellaneous Services

13.9 Billing Name and Address Service (Cont'd)

13.9.3 Obligations of the Customer

(B) The customer shall treat all BNA information as confidential. The customer shall insure that BNA information is used only for the purposes as described in 13.9.1(B) preceding.

(C) The customer shall not publicize or represent to others that the Telephone Company jointly participates with the customer in the development of the customer's end user records it assembles through the use of BNA Service.

(D) Upon request, the customer will provide to the Telephone Company the source data upon which the customer has based an order for BNA service. The Telephone Company will not process the order until such time as the customer provides the requested data.

13.9.4 Rate Regulations

(A) For each order for BNA information received by the Telephone Company, a BNA Order charge applies. In addition, a charge applies for each customer specific record provided. The BNA Order Charge and the Per Record Charge are specified in 17.4.4 following.

(B) Where available, the customer may order the response formatted on Magnetic Tape. The Optional Magnetic Tape Charge is specified in 17.4.4 following and is in addition to the BNA Order Charge and the BNA Record Charge.

(C) Where available, the customer may order an output format other than a standard paper format in order to meet a customer's specific requirement. This option is subject to an hourly programming charge as specified in 17.4.4 following and is in addition to the BNA Order Charge and the BNA Record Charge.

APPROVED FOR FILING - THE PUBLIC SERVICE COMMISSION OF SOUTH CAROLINA - JULY 15, 2014

Additional Engineering, Additional Labor and Miscellaneous Services

13.10 Provision of Access Service Billing Information

Billing Mediums

The customer shall select the primary medium in which its official access service bills and customer service records are to be provided. This selection shall be on an account level basis, and shall be submitted in writing to the Telephone Company.

(A) Primary Bill

At no charge to the customer, the customer shall select as the primary billing medium one of the following billing formats: standard paper, magnetic tape, or data transmission. The primary billing medium shall serve as the customer's official bill. Should the customer fail to make a selection, the official copy of the customer's access service bills and customer service records will be provided in the standard paper format.

Upon acceptance by the Telephone Company of an order for electronic data transfer, the Telephone Company will determine the period of time to implement the transmission of such material on an individual order basis.

When magnetic tape or data transmission is requested as the primary monthly bill, the customer must sign a Document of Understanding.

When magnetic tape or data transmission is requested as the primary monthly bill, the customer will receive an abbreviated bill in paper format. The abbreviated bill will contain the following sections: All Page, Balance Due, Meet Point Billing Cross Reference, Detail of Payments Applied, Detail of Balance Due, Detail of Late Payment Charges, and Other Charges and Credits.
The Telephone Company will accept a request for change from one form of primary billing medium to another at no charge to the customer.

(B) Secondary/Additional Bills

At the customer's written request, a secondary bill, in addition to the customer's primary bill will be provided on a monthly basis. The customer may choose as the medium for the secondary bill one of the following formats: standard paper, magnetic tape, or data transmission. Charges for the provision of a secondary bill are set forth in 17.4.4 following.

APPROVED FOR FILING - THE PUBLIC SERVICE COMMISSION OF SOUTH CAROLINA - JULY 15, 2014

Additional Engineering, Additional Labor and Miscellaneous Services

13.10 Provision of Access Service Billing Information

(B) Secondary/Additional Bills (Cont'd)

Additional copies of a customer's previous monthly access service bills will be provided in paper format, or magnetic tape/data transmission if the original bill was generated in this format. Requests for additional copies of previous monthly bills must be submitted in writing and shall specify the bill dates requested. Such a request, when not the result of a Telephone Company error will be subject to charges as set forth in 17.4.4 following. Unless specified otherwise, additional copies of the customer's access service bills and/or magnetic tapes will be sent via U.S. Mail Service.

13.11 Originating Line Screening (OLS) Service

The Telephone Company will provide OLS Service to end user customers who obtain local exchange service from the Telephone Company under its general or local exchange tariffs. OLS service enables customers to determine whether there are billing restrictions on lines from which a call is placed.

Originating Line Screening information is provided through Flexible Automatic Number Identification (Flex ANI) described in 6.10.3. Flex ANI provides a two digit code (information digits) that identifies the nature of the originating exchange line to the customer. The OLS service delivers a code on all calls that identifies an exchange line as being used for inmate services (Code 29) or private payphone (code 70).

APPROVED FOR FILING - THE PUBLIC SERVICE COMMISSION OF SOUTH CAROLINA - JULY 15, 2014

Additional Engineering, Additional Labor and Miscellaneous Services

13.12 Coin Supervision Additive Service

The Telephone Company will provide Coin Supervision Additive Service to Payphone Service Providers (PSPs) who order local exchange service lines for the provision of pay telephone service lines requires central office coin supervision capability. The local exchange service is obtained from and subject to the terms and conditions under the Telephone Company's general and/or local tariffs.

Coin Supervision Additive Service provides the capability of central office line equipment line equipment to pass signals and/or tones from an exchange service line to a trunk terminating at the PSP's operator service provider. These signals enable an operator service provider to recognize coin deposits and return coins to the pay telephone user. Coin Supervision Additive Service also permits a suitably equipped operator service provider to automatically ring back the originating exchange service line upon completion of a call.

APPROVED FOR FILING - THE PUBLIC SERVICE COMMISSION OF SOUTH CAROLINA - JULY 15, 2014

Exceptions to Access Service Offerings

CONTENTS

	Page No
Exceptions	1

APPROVED FOR FILING - THE PUBLIC SERVICE COMMISSION OF SOUTH CAROLINA - JULY 15, 2014

Exceptions to Access Service Offerings

The services offered under the provisions of this tariff are subject to availability as set forth in 2.1.4 preceding. In addition, the following exceptions apply:

(Paragraphs 14.1 through 14.5 following are reserved for future listings as a result of a subsequent survey. In the meantime, in planning an end-to-end service, the customer should contact the Telephone Company in each customer designated premises city to assure itself that all of the service or service components required for a given customer service are currently available.)

14.1 The following service(s) is (are) not offered in the operating territory of listed Issuing Carriers.

(Reserved for future use.)

14.2 The following offering(s) is (are) limited to existing locations. No inside moves, rearrangements or additions will be permitted.

(Reserved for future use.)

14.3 The following offering(s) is (are) limited to existing locations. Inside moves or rearrangements may be undertaken. However, no additions will be permitted.

(Reserved for future use.)

14.4 The following offering(s) is (are) limited to existing locations where additional units may be added for growth. Inside moves or rearrangements may be undertaken.

(Reserved for future use.)

14.5 The following offering(s) is (are) limited to existing locations where additional units may be added for growth. However inside moves or rearrangements will not be permitted.

(Reserved for future use.)

APPROVED FOR FILING - THE PUBLIC SERVICE COMMISSION OF SOUTH CAROLINA - JULY 15, 2014

Access Service Interfaces and Transmission Specifications

CONTENTS

		Page No.
15.1	Switched Access Service	1
	15.1.1 Local Transport Interface Groups	1
	15.1.2 Standard Transmission Specifications	11
	15.1.3 Data Transmission Parameters	20
15.2	Special Access Service	24
	15.2.1 Network Channel (NC) Codes	27
	15.2.2 Network Channel Interface (NCI) Codes	36
15.3	Directory Access Service	56
	15.3.1 Interface Group and Premises Interface Codes	56
	15.3.2 Standard Transmission Specifications	57

APPROVED FOR FILING - THE PUBLIC SERVICE COMMISSION OF SOUTH CAROLINA - JULY 15, 2014

Access Service Interfaces and Transmission Specifications

Section 15.1 contains Switched Access Service Options (which are comprised of Interface Groups, Supervisory Signaling, Entry Switch Receive Level and Local Transport Termination) and Transmission Specifications. Section 15.2 describes Special Access Service Network Channel (NC) codes and Network Channel Interface (NCI) codes. Section 15.3 contains Interface Group, Premises Interface Code and Standard Transmission Specifications applicable to Directory Access Service.

15.1 Switched Access Service

Ten Interface Groups are provided for terminating the Local Transport Entrance Facility at the customer's designated premises. Each Interface Group provides a specified premises interface (e.g., two-wire, four-wire, DS1, etc.). Where transmission facilities permit, and at the option of the customer, the Entrance Facility may be provided with optional features as set forth in 15.1.1 following.

As a result of the customer's access order and the type of Telephone Company transport facilities serving the customer designated premises, the need for signaling conversions or two-wire or four-wire conversions, or the need to terminate digital or high frequency facilities in channel bank equipment may require that Telephone Company equipment be placed at the customer designated premises. For example, if a voice frequency interface is ordered by the customer and the Telephone Company facilities serving the customer designated premises are digital, then Telephone Company channel bank equipment must be placed at the customer designated premises in order to provide the voice frequency interface ordered by the customer.

15.1.1 Local Transport Interface Groups

Interface Groups are combinations of technical parameters which describe the Telephone Company handoff at the point of termination at the customer designated premises. The technical specifications concerning the available interface groups are set forth in (A) through (D) following.

APPROVED FOR FILING - THE PUBLIC SERVICE COMMISSION OF SOUTH CAROLINA - JULY 15, 2014

Access Service Interfaces and Transmission Specifications

15.1 Switched Access Service (Cont'd)

15.1.1 Local Transport Interface Groups (Cont'd)

Interface Group 1 is provided with Type C Transmission Specifications, as set forth in 15.1.2(C) following, and Interface Groups 2 through 10 are provided with Type A or B Transmission Specifications, as set forth respectively in 15.1.2(E) and (F) following, depending on the Feature Group and whether the Access Service is routed directly or through an access tandem. All Interface Groups are provided with Data Transmission Parameters.

Only certain premises interfaces are available at the customer designated premises. The premises interfaces associated with the Interface Groups may vary among Feature Groups.

(A) Interface Group 1

Interface Group 1, except as set forth in the following, provides two-wire voice frequency transmission at the point of termination at the customer designated premises. The interface is capable of transmission of voice and associated telephone signals within the frequency bandwidth of approximately 300 to 3000 Hz.

Interface Group 1 is not provided in association with FGC and FGD when the first point of switching is an access tandem. In addition, Interface Group 1 is not provided in association with FGB, FGC or FGD when the first point of switching provides only four-wire terminations.

APPROVED FOR FILING - THE PUBLIC SERVICE COMMISSION OF SOUTH CAROLINA - JULY 15, 2014

Access Service Interfaces and Transmission Specifications

15.1 Switched Access Service (Cont'd)

15.1.1 Local Transport Interface Groups (Cont'd)

(A) Interface Group 1 (Cont'd)

The transmission path between the point of termination at the customer designated premises and the customer serving wire center may be comprised of any form or configuration of plant capable of and typically used in the telecommunications industry for the transmission of voice and associated telephone signals within the frequency bandwidth of 300 to 3000 Hz.

The interface is provided with loop supervisory signaling. When the interface is associated with FGA, such signaling will be loop start or ground start signaling. When the interface is associated with FGB, FGC or FGD, such signaling, except for two-way calling which is E&M signaling, will be reverse battery signaling.

(B) Interface Group 2

Interface Group 2 provides four-wire voice frequency transmission at the point of termination at the customer designated premises. The interface is capable of transmission of voice and associated telephone signals within the frequency bandwidth of approximately 300 to 3000 Hz.

The transmission path between the point of termination at the customer designated premises and the customer serving wire center may be comprised of any form or configuration of plant capable of and typically used in the telecommunications industry for the transmission of voice and associated telephone signals within the frequency bandwidth of approximately 300 to 3000 Hz.

APPROVED FOR FILING - THE PUBLIC SERVICE COMMISSION OF SOUTH CAROLINA - JULY 15, 2014

Access Service Interfaces and Transmission Specifications

15.1 Switched Access Service (Cont'd)

15.1.1 Local Transport Interface Groups (Cont'd)

(B) Interface Group 2 (Cont'd)

The interface is provided with loop supervisory signaling. When the interface is associated with FGA, such signaling will be loop start or ground start signaling. When the interface is associated with FGB, FGC or FGD, such signaling, except for two-way calling which is E&M signaling, will be reverse battery signaling.

(C) Interface Groups 3 through 5

Interface Groups 3 through 5 provide analog transmission at the point of termination at the customer designated premises. The various interfaces are capable of transmitting electrical signals at the frequencies illustrated following, with the capability to channelize voice frequency transmission paths. Certain frequencies within the bandwidth of the Interface Groups are reserved for Telephone Company use, e.g., pilot and carrier group alarm tones. Before the first point of switching, the Telephone Company will provide multiplex equipment to derive the transmission paths of frequency bandwidth of approximately 300 to 3000 Hz.

The interfaces are provided with individual transmission path SF supervisory signaling.

Interface Group Identification No.	Transmission Frequency Bandwidth	Analog Hierarchy Level	Maximum No. of Channelized Voice Freq. Trans. Paths
3	60-108 kHz	Group	12
4	312-552 kHz	Supergroup	60
5	564-3084 kHz	Mastergroup	600

APPROVED FOR FILING - THE PUBLIC SERVICE COMMISSION OF SOUTH CAROLINA - JULY 15, 2014

Access Service Interfaces and Transmission Specifications

15.1 Switched Access Service (Cont'd)

15.1.1 Local Transport Interface Groups (Cont'd)

(D) Interface Groups 6 through 10

Interface Groups 6 through 10 provide digital transmission at the point of termination at the customer designated premises. The various interfaces are capable of transmitting electrical signals at the nominal bit rates illustrated following, with the capability to channelize voice frequency transmission paths. Before the first point of switching, when analog switching utilizing analog terminations is provided, the Telephone Company will provide multiplex and channel bank equipment to derive transmission paths of a frequency bandwidth of approximately 300 to 3000 Hz. When digital switching or analog switching with digital carrier terminations is provided, the Telephone Company will provide a DS1 signal(s) in D3/D4 format.

The interfaces are provided with individual transmission path bit stream supervisory signaling.

Interface Group Identification No.	Nominal Bit Rate (Mbps)	Digital Hierarchy Level	Max. No. of Channelized Voice Freq. Trans. Paths
6	1.544	DS1	24
7	3.152	DS1C	48
8	6.312	DS2	96
9	44.736	DS3	672
10	274.176	DS4	4032

APPROVED FOR FILING - THE PUBLIC SERVICE COMMISSION OF SOUTH CAROLINA - JULY 15, 2014

Access Service Interfaces and Transmission Specifications

15.1 Switched Access Service (Cont'd)

15.1.1 Local Transport Interface Groups (Cont'd)

(E) Local Transport Optional Features

Where transmission facilities permit, the Telephone Company will, at the option of the customer, provide the following features in association with Local Transport. An Access Order Charge as specified in 17.4.1(A) following is applicable on a per order basis when nonchargeable optional features are added subsequent to the installation of service.

- Customer Specified Entry Switch Receive Level

  Customer Specified Entry Switch Receive Level allows the customer to specify the receive transmission level at the first point of switching. The range of transmission levels which may be specified is described in Technical Reference TR-NPL-000334. This feature is available with Interface Groups 2 through 10 for Feature Groups A and B.

- Customer Specification of Local Transport Termination

  Customer Specification of Local Transport Termination allows the customer to specify, for Feature Group B routed directly to an end office or access tandem, a four-wire termination of the Local Transport at the first point of switching in lieu of a Telephone Company selected two-wire termination. This option is available only when the Feature Group B arrangement is provided with Type B Transmission Specifications.

- Supervisory Signaling

  Supervisory Signaling allows the customer to order an optional supervisory signaling arrangement for each transmission path provided where the transmission parameters permit, and where signaling conversion is required by the customer to meet its signaling capability.

APPROVED FOR FILING - THE PUBLIC SERVICE COMMISSION OF SOUTH CAROLINA - JULY 15, 2014

Access Service Interfaces and Transmission Specifications

15.1 Switched Access Service (Cont'd)

15.1.1 Local Transport Interface Groups (Cont'd)

(E) Local Transport Optional Features (Cont'd)

The Interface Groups, as described in (A) through (D) preceding, represent industry standard arrangements. Where transmission parameters permit, the customer may select the following optional signaling arrangements in place of the signaling arrangements standardly associated with the Interface Groups.

- For Interface Groups 1 and 2 associated with FGB, FGC or FGD

  DX Supervisory Signaling,
  E&M Type I Supervisory Signaling,
  E&M Type II Supervisory Signaling, or
  E&M Type III Supervisory Signaling

- For Interface Group 2 associated with FGB, FGC or FGD and in addition to the preceding

  SF Supervisory Signaling or
  Tandem Supervisory Signaling

- For Interface Groups 3 through 5

  Optional Supervisory Signaling Not Available

- For Interface Groups 6 through 10

  These Interfaces Groups may, at the option of the customer, be provided with individual transmission path SF supervisory signaling where such signaling is available in Telephone Company central offices. Generally such signaling is available only where the first point of switching provides an analog (i.e., non digital) interface to the transport termination.

  These optional Supervisory Signaling arrangements are not available in combination with the SS7 optional feature as described in 6.8.2(C) (2) preceding.

  Additionally, in (F) following, there is a matrix of available Premises Interface Codes as a function of Interface Group, Telephone Company Switch Supervisory Signaling and Feature Group.

APPROVED FOR FILING - THE PUBLIC SERVICE COMMISSION OF SOUTH CAROLINA - JULY 15, 2014

Access Service Interfaces and Transmission Specifications

15.1 Switched Access Service (Cont'd)

15.1.1 Local Transport Interface Groups (Cont'd)

(F) Available Premises Interface Codes

Following is a matrix showing premises interface codes which are available for each Interface Group. Their availability is a function of the Telephone Company switch supervisory signaling and Feature Group. For explanations of these codes, see the Parameter Codes and Options as set forth in 15.2.2(A) following.

Interface Group	Telephone Company Switch Supervisory Signaling	Premises Interface Code	Feature Group A	B	C	D
1	LO	2LS2	X			
	LO	2LS3	X			
	GO	2GS2	X			
	GO	2GS3	X			
	LO, GO	2DX3	X			
	LO, GO	4EA3-E	X			
	LO, GO	4EA3-M	X			
	LO, GO	6EB3-E	X			
	LO, GO	6EB3-M	X			
	RV, EA, EB, EC3	2DX3		X	X	X
	RV, EA, EB, EC	4EA3-E		X	X	X
	RV, EA, EB, EC	4EA3-M		X	X	X
	RV, EA, EB, EC	6EB3-E		X	X	X
	RV, EA, EB, EC	6EB3-M		X	X	X
	EA, EB, EC	6EC3			X	X
	RV	2RV3-0		X	X	X
	RV	2RV3-T		X	X	X
	SS7	2NO2			X	X
2	LO, GO	4SF2		X		
	LO, GO	4SF3		X		
	LO	4LS2		X		
	LO	4LS3		X		
	LO	6LS2		X		

APPROVED FOR FILING - THE PUBLIC SERVICE COMMISSION OF SOUTH CAROLINA - JULY 15, 2014

Access Service Interfaces and Transmission Specifications

15.1 Switched Access Service (Cont'd)

15.1.1 Local Transport Interface Groups (Cont'd)

(F) Available Premises Interface Codes (Cont'd)

Interface Group	Telephone Company Switch Supervisory Signaling	Premises Interface Code	Feature Group A	B	C	D
2 (Cont'd)	GO	4GS2	X			
	GO	4GS3	X			
	GO	6GS2	X			
	LO, GO	4DX2	X			
	LO, GO	4DX3	X			
	LO, GO	6EA2-E	X			
	LO, GO	6EA2-M	X			
	LO, GO	8EB2-E	X			
	LO, GO	8EB2-M	X			
	LO, GO	6EX2-B	X			
	RV, EA, EB, EC	4SF2		X	X	X
	RV, EA, EB, EC	4SF3		X		
	RV, EA, EB, EC	4DX2		X	X	X
	RV, EA, EB, EC	4DX3			X	
	RV, EA, EB, EC	6DX2				X
	RV, EA, EB, EC	6EA2-E		X	X	X
	RV, EA, EB, EC	6EA2-M		X	X	X
	RV, EA, EB, EC	8EB2-E		X	X	X
	RV, EA, EB, EC	8EB2-M		X	X	X
	EA, EB, EC	8EC2-M			X	X
	RV	4RV2-O		X	X	X
	RV	4RV2-T		X	X	X
	RV	4RV3-O		X	X	
	RV	4RV3-T		X	X	
	SS7	4NO2			X	X
3	LO, GO	4AH5-B	X			
	RV, EA, EB, EC	4AH5-B		X	X	X
	SS7	4AH5-B			X	X
4	LO, GO	4AH6-C	X			
	RV, EA, EB, EC	4AH6-C		X	X	X
	SS7	4AH6-C			X	X
5	LO, GO	4AH6-D	X			
	RV, EA, EB, EC	4AH6-D		X	X	X
	SS7	4AH6-D			X	X

APPROVED FOR FILING - THE PUBLIC SERVICE COMMISSION OF SOUTH CAROLINA - JULY 15, 2014

Access Service Interfaces and Transmission Specifications

15.1 Switched Access Service (Cont'd)

15.1.1 Local Transport Interface Groups (Cont'd)

(F) Available Premises Interface Codes (Cont'd)

Interface Group	Telephone Company Switch Supervisory Signaling	Premises Interface Code	Feature Group A	B	C	D
6	LO, GO	4DS9-15	X			
	LO, GO	4DS9-15L	X			
	RV, EA, EB, EC	4DS9-15		X	X	X
	RV, EA, EB, EC	4DS9-15L		X	X	X
	SS7	4DS9-15			X	X
7	LO, GO	4DS9-31	X			
	LO, GO	4DS9-31L	X			
	RV, EA, EB, EC	4DS9-31		X	X	X
	RV, EA, EB, EC	4DS9-31L		X	X	X
	SS7	4DS9-31			X	X
8	LO, GO	4DS0-63	X			
	LO, GO	4DS0-63L	X			
	RV, EA, EB, EC	4DS0-63		X	X	X
	RV, EA, EB, EC	4DS0-63L		X	X	X
	SS7	4DS0-63			X	X
9	LO, GO	4DS6-44	X			
	LO, GO	4DS6-44	X			
	RV, EA, EB, EC	4DS6-44		X	X	X
	RV, EA, EB, EC	4DS6-44L		X	X	X
	SS7	4DS6-44			X	X
10	LO, GO	4DS6-27	X			
	LO, GO	4DS6-27L	X			
	RV, EA, EB, EC	4DS6-27		X	X	X
	RV, EA, EB, EC	4DS6-27L		X	X	X
	SS7	4DS6-27			X	X

APPROVED FOR FILING - THE PUBLIC SERVICE COMMISSION OF SOUTH CAROLINA - JULY 15, 2014

Access Service Interfaces and Transmission Specifications

15.1 Switched Access Service (Cont'd)

15.1.2 Standard Transmission Specifications

Descriptions of the transmission specifications available with each Feature Group as a function of the Interface Group selected by the customer, are set forth in (A) through (D) following. Descriptions of each of the these Standard Transmission Specifications and the two Data Transmission Parameters mentioned are set forth respectively in (E) through (G) and 15.1.3(A) and (B) following:

(A) Feature Group A

FGA is provided with either Type B or Type C Transmission Specifications. The specifications for the associated parameters are guaranteed to the first point of switching. Type C Transmission Specifications are provided with Interface Group 1 and Type B is provided with Interface Groups 2 through 10. Type DB Data Transmission Parameters are provided with FGA to the first point of switching.

(B) Feature Group B

FGB is provided with either Type B or Type C Transmission Specifications. The specifications for the associated parameters are guaranteed to the end office when routed directly or to the first point of switching when routed via an access tandem. Type C Transmission Specifications are provided with Interface Group 1 and Type B is provided with Interface Groups 2 through 10. Type DB Data Transmission Parameters are provided with FGB to the first point of switching.

APPROVED FOR FILING - THE PUBLIC SERVICE COMMISSION OF SOUTH CAROLINA - JULY 15, 2014

Access Service Interfaces and Transmission Specifications

15.1 Switched Access Service (Cont'd)

15.1.2 Standard Transmission Specifications (Cont'd)

(C) Feature Group C

FGC is provided with either Type B or Type C Transmission Specifications as follows:

- When routed directly to the end office either Type B or Type C is provided.

- When routed to an access tandem only Type B is provided.

- Type B or Type C is provided on the transmission path from the access tandem to the end office.

Type C Transmission Specifications are provided with Interface Group 1 when routed directly to an end office. Type B is provided with Interface Groups 2 through 10, whether routed directly to an end office or to an access tandem.

Type DB Data Transmission Parameters are provided with FGC for the transmission path between the customer designated premises and the end office when directly routed to the end office, and between the customer designated premises and the access tandem and between the access tandem and the end office when routed via an access tandem.

APPROVED FOR FILING - THE PUBLIC SERVICE COMMISSION OF SOUTH CAROLINA - JULY 15, 2014

Access Service Interfaces and Transmission Specifications

15.1 Switched Access Service (Cont'd)

15.1.2 Standard Transmission Specifications (Cont'd)

(D) Feature Group D

FGD is provided with either Type A, Type B or Type C Transmission Specifications as follows:

- When routed to the end office either Type B or C is provided.

- When routed to an access tandem only Type A is provided.

- Type A is provided on the transmission path from the access tandem to the end office.

Type C Transmission Specifications are provided with Interface Group 1. Type A and Type B Transmission Specifications are provided with Interface Groups 2 through 10.

Type DB Data Transmission Parameters are provided with FGD for the transmission path between the customer designated premises and the end office when directly routed to the end office. Type DA Data Transmission Parameters are provided for the transmission path between the customer designated premises and the access tandem and between the access tandem and the end office when routed via an access tandem.

(E) Type A Transmission Specifications

Type A Transmission Specifications is provided with the following parameters:

(1) Loss Deviation

The maximum Loss Deviation of the 1004 Hz loss relative to the Expected Measured Loss (EML) is ± 2.0 dB

APPROVED FOR FILING - THE PUBLIC SERVICE COMMISSION OF SOUTH CAROLINA - JULY 15, 2014

Access Service Interfaces and Transmission Specifications

15.1 Switched Access Service (Cont'd)

15.1.2 Standard Transmission Specifications (Cont'd)

(E) Type A Transmission Specifications (Cont'd)

(2) Attenuation Distortion

The maximum Attenuation Distortion in the 404 to 2804 Hz frequency band relative to the loss at 1004 Hz is -1.0 dB to +3.0 dB.

(3) C-Message Noise

The maximum C-Message Noise for the transmission path at the route miles listed is less than or equal to:

Route Miles	C-Message Noise
less than 50	32 dBrnCO
51 to 100	34 dBrnCO
101 to 200	37 dBrnCO
201 to 400	40 dBrnCO
401 to 1000	42 dBrnCO

(4) C-Notch Noise

The maximum C-Notch Noise, utilizing a -16 dBmO holding tone, is less than or equal to 45 dBrnCO.

APPROVED FOR FILING - THE PUBLIC SERVICE COMMISSION OF SOUTH CAROLINA - JULY 15, 2014

Access Service Interfaces and Transmission Specifications

15.1 Switched Access Service (Cont'd)

15.1.2 Standard Transmission Specifications (Cont'd)

(E) Type A Transmission Specifications (Cont'd)

(5) Echo Control

Echo Control, identified as Equal Level Echo Path Loss, and expressed as Echo Return Loss and Singing Return Loss, is dependent on the routing, i.e., whether the service is routed directly from the customer's point of termination (POT) to the end office or via an access tandem. It is equal to or greater than the following:

	Echo Return Loss	Singing Return Loss
POT to Access Tandem	21 dB	14
POT to End Office		
- Direct	N/A	N/A
- Via Access Tandem	16 dB	11 dB

(6) Standard Return Loss

Standard Return Loss expressed as Echo Return Loss and Singing Return Loss on two-wire ports of a four-wire point of termination shall be equal to or greater than:

Echo Return Loss	Singing Return Loss
5 dB	2.5 dB

APPROVED FOR FILING - THE PUBLIC SERVICE COMMISSION OF SOUTH CAROLINA - JULY 15, 2014

Access Service Interfaces and Transmission Specifications

15.1 Switched Access Service (Cont'd)

15.1.2 Standard Transmission Specifications (Cont'd)

(F) Type B Transmission Specifications

Type B Transmission Specifications are provided with the following parameters:

(1) Loss Deviation

The maximum Loss Deviation of the 1004 Hz loss relative to the Expected Measured Loss (EML) is ± 2.5 dB.

(2) Attenuation Distortion

The maximum Attenuation Distortion in the 404 to 2804 Hz frequency band relative to loss at 1004 Hz is -2.0 dB to +4.0 dB.

(3) C-Message Noise

The maximum C-Message Noise for the transmission path at the route miles listed is less than or equal to:

	C-Message Noise*	
Route Miles	Type B1	Type B2
less than 50	32 dBrnCO	35 dBrnCO
51 to 100	33 dBrnCO	37 dBrnCO
101 to 200	35 dBrnCO	40 dBrnCO
201 to 400	37 dBrnCO	43 dBrnCO
401 to 1000	39 dBrnCO	45 dBrnCO

(4) C-Notch Noise

The maximum C-Notch Noise, utilizing a -16 dBm0 holding tone is less than or equal to 47 dBrnCO.

* For Feature Groups C and D only Type B2 will be provided. For Feature Groups A and B, Type B1 or B2 will be provided as set forth in Technical Reference TR-NPL-000334.

APPROVED FOR FILING - THE PUBLIC SERVICE COMMISSION OF SOUTH CAROLINA - JULY 15, 2014

Access Service Interfaces and Transmission Specifications

15.1 Switched Access Service (Cont'd)

15.1.2 Standard Transmission Specifications (Cont'd)

(F) Type B Transmission Specifications (Cont'd)

(5) Echo Control

Echo Control, identified as Impedance Balance for FGA and FGB and Equal Level Echo Path Loss for FGC and FGD, and expressed as Echo Return Loss (ERL) and Singing Return Loss (SRL), is dependent on the routing, i.e., whether the service is routed directly from the customer's point of termination (POT) to the end office or via an access tandem. The ERL and SRL also differ by Feature Group, type of termination, and type of transmission path. They are greater than or equal to the following:

	Echo Return Loss	Singing Return Loss
POT to Access Tandem		
- Terminated in 4-Wire trunk	21 dB	14 dB
- Terminated in 2-Wire trunk	16 dB	11 dB
POT to End Office		
- Direct	16 dB	11 dB
- Via Access Tandem		
. For FGB access	8 dB	4 dB
. For FGC access (Effective 4-Wire transmission path at end office)	16 dB	11 dB
. For FGC access (Effective 2-Wire transmission path at end office)	13 dB	6 dB

APPROVED FOR FILING - THE PUBLIC SERVICE COMMISSION OF SOUTH CAROLINA - JULY 15, 2014

Access Service Interfaces and Transmission Specifications

15.1 Switched Access Service (Cont'd)

15.1.2 Standard Transmission Specifications (Cont'd)

(F) Type B Transmission Specifications (Cont'd)

(6) Standard Return Loss

Standard Return Loss, expressed as Echo Return Loss and Singing Return Loss, on two-wire ports of a four-wire point of termination shall be equal to or greater than:

Echo Return Loss	Singing Return Loss
5 dB	2.5 dB

(G) Type C Transmission Specifications

Type C Transmission Specifications are provided with the following parameters:

(1) Loss Deviation

The maximum Loss Deviation of the 1004 Hz loss relative to the Expected Measured Loss (EML) is ± 3.0 dB.

(2) Attenuation Distortion

The maximum Attenuation Distortion in the 404 to 2804 Hz frequency band relative to loss at 1004 Hz is -2.0 dB to + 5.5 dB.

APPROVED FOR FILING - THE PUBLIC SERVICE COMMISSION OF SOUTH CAROLINA - JULY 15, 2014

Access Service Interfaces and Transmission Specifications

15.1 Switched Access Service (Cont'd)

15.1.2 Standard Transmission Specifications (Cont'd)

(G) Type C Transmission Specifications (Cont'd)

(3) C-Message Noise

The maximum C-Message Noise for the transmission path at the route miles listed is less than or equal to:

	C-Message Noise*	
Route Miles	Type C1	Type C2
less than 50	32 dBrnCO	38 dBrnCO
51 to 100	33 dBrnCO	39 dBrnCO
101 to 200	35 dBrnCO	41 dBrnCO
201 to 400	37 dBrnCO	43 dBrnCO
401 to 1000	39 dBrnCO	45 dBrnCO

(4) C-Notch Noise

The maximum C-Notch Noise, utilizing a -16 dBm0 holding tone is less than or equal to 47 dBrnCO.

* For Feature Groups C and D only Type C2 will be provided. For Feature Groups A and B, Type C1 or C2 will be provided as set forth in Technical Reference TR-NPL-000334.

APPROVED FOR FILING - THE PUBLIC SERVICE COMMISSION OF SOUTH CAROLINA - JULY 15, 2014

Access Service Interfaces and Transmission Specifications

15.1 Switched Access Service (Cont'd)

15.1.2 Standard Transmission Specifications (Cont'd)

(G) Type C Transmission Specifications (Cont'd)

(5) Echo Control

Echo Control, identified as Return Loss and expressed as Echo Return Loss and Singing Return Loss is dependent on the routing, i.e., whether the service is routed directly from the customer's point of termination (POT) to the end office or via an access tandem. It is equal to or greater than the following:

	Echo Return Loss	Singing Return Loss
POT to Access Tandem	13 dB	6 dB
POT to End Office		
- Direct	13 dB	6 dB
- Via Access Tandem (for FGB only)	8 dB	4 dB

15.1.3 Data Transmission Parameters

Two types of Data Transmission Parameters, i.e., Type DA and Type DB, are provided for the Feature Group arrangements. Type DB is provided with Feature Groups A, B and C and also with Feature Group D when Feature Group D is directly routed to the end office. Type DA is only provided with Feature Group D and only when routed via an access tandem. Following are descriptions of each.

(A) Data Transmission Parameters Type DA

(1) Signal to C-Notched Noise Ratio

The Signal to C-Notched Noise Ratio is equal to or greater than 33 dB.

APPROVED FOR FILING - THE PUBLIC SERVICE COMMISSION OF SOUTH CAROLINA - JULY 15, 2014

Access Service Interfaces and Transmission Specifications

15.1 Switched Access Service (Cont'd)

15.1.3 Data Transmission Parameters(Cont'd)

(A) Data Transmission Parameters Type DA (Cont'd)

(2) Envelope Delay Distortion

The maximum Envelope Delay Distortion for the frequency bands and route miles specified is:

604 to 2804 Hz

less than 50 route miles	500 microseconds
equal to or greater than 50 route miles	900 microseconds

1004 to 2404 Hz

less than 50 route miles	200 microseconds
equal to or greater than 50 route miles	400 microseconds

(3) Impulse Noise Counts

The Impulse Noise Counts exceeding a 65 dBrnCO threshold in 15 minutes is no more than 15 counts.

(4) Intermodulation Distortion

The Second Order (R2) and Third Order (R3) Intermodulation Distortion products are equal to or greater than:

Second Order (R2)	33 dB
Third Order (R3)	37 dB

APPROVED FOR FILING - THE PUBLIC SERVICE COMMISSION OF SOUTH CAROLINA - JULY 15, 2014

Access Service Interfaces and Transmission Specifications

15.1 Switched Access Service (Cont'd)

15.1.3 Data Transmission Parameters(Cont'd)

(A) Data Transmission Parameters Type DA (Cont'd)

(5) Phase Jitter

The Phase Jitter over the 4-300 Hz frequency band is less than or equal to 5o peak-to-peak.

(6) Frequency Shift

The maximum Frequency Shift does not exceed -2 to +2 Hz.

(B) Data Transmission Parameters Type DB

(1) Signal to C-Notched Noise Ratio

The Signal to C-Notched Noise Ratio is equal to or greater than 30 dB.

(2) Envelope Delay Distortion

The maximum Envelope Delay Distortion for the frequency bands and route miles specified is:

604 to 2804 Hz

less than 50 route miles	800 microseconds
equal to or greater than 50 route miles	1000 microseconds

1004 to 2404 Hz

less than 50 route mile	320 microseconds
equal to or greater than 50 route miles	500 microseconds

APPROVED FOR FILING - THE PUBLIC SERVICE COMMISSION OF SOUTH CAROLINA - JULY 15, 2014

Access Service Interfaces and Transmission Specifications

15.1 Switched Access Service (Cont'd)

15.1.3 Data Transmission Parameters(Cont'd)

(B) Data Transmission Parameters Type DB (Cont'd)

(3) Impulse Noise Counts

The Impulse Noise Counts exceeding a 67 dBrnCO threshold in 15 minutes is no more than 15 counts.

(4) Intermodulation Distortion

The Second Order (R2) and Third Order (R3) Intermodulation Distortion products are equal to or greater than:

Second Order (R2)	31 dB
Third Order (R3)	34 dB

(5) Phase Jitter

The Phase Jitter over the 4-300 Hz frequency band is less than or equal to 7o peak-to-peak.

(6) Frequency Shift

The maximum Frequency Shift does not exceed -2 to +2 Hz.

APPROVED FOR FILING - THE PUBLIC SERVICE COMMISSION OF SOUTH CAROLINA - JULY 15, 2014

Access Service Interfaces and Transmission Specifications

15.2 Special Access Service

This section explains and lists the codes that the customer must specify when ordering Special Access Service, Switched Access Entrance Facilities, and Voice Grade and High Capacity Direct Trunked Transport. These codes provide a standardized means to relate the services being ordered to Special Access Service offerings contained in Section 7. preceding.

When ordering, the type of Special Access Service or Switched Access Entrance Facility or Direct Trunked Transport is described by two code sets, the Network Channel (NC) code and the Network Channel Interface (NCI) codes.

The Network Channel (NC) code consists of two elements. Element one is a Channel Service Code (character positions 1 and 2) that describes the channel service type in an abbreviated form. Element two is an Optional Feature Code (character positions 3 and 4) that identifies option codes available for each channel service code, such as C-conditioning or Improved Return Loss.

The Network Channel Interface (NCI) is used to identify interface specifications associated with a particular channel. This code describes the total wires, protocol, impedance, protocol options and transmission level point(s) reflecting physical and electrical characteristics between the Telephone Company and the customer.

On the following 3 pages are examples which explain the specific characters of the codes and which reference matrices and charts used in developing the codes. Included in the matrices are Service Designator (SD) codes which are used to identify variations of service within service types (e.g., TG1 = Telegraph). The SD and NC codes are displayed as components of the matrices designated as Technical Specifications packages in (A) through (G) following. Through the use of these matrices, SD codes may be converted to NC codes for service ordering purposes.

A chart is also provided in 15.2.2(A) following which contains information necessary to develop NCI codes.

APPROVED FOR FILING - THE PUBLIC SERVICE COMMISSION OF SOUTH CAROLINA - JULY 15, 2014

Access Service Interfaces and Transmission Specifications

15.2 Special Access Service (Cont'd)

Comprehensive lists of allowed Network Channel (NC) and Network Channel Interface (NCI) codes are contained in Special Report SR-STS-000307. However, not all services contained in this Special Report may be offered by the Telephone Company at this time.

Lastly, 15.2.2(C) following provides a list of compatible Network Channel Interfaces inasmuch as the Network Channel Interfaces associated with a given service need not always be the same, but all must be compatible.

Example No. 1: If the customer wishes to order a 4-wire voice grade circuit with 600 Ohms impedance, capable of data transmission, and with improved return loss, the customer might specify the following:

NC	NCI	SECNCI
LG-R	04DB2	04DA2-S

NC Code:
- LG = Voice Grade Channel Service, VG6
- -R = Improved Return Loss

NCI Code:
- 04 = Number of physical wires at CDP
- DB = Data stream in VF frequency band at the customer designated main terminal location
- 2 = 600 Ohms impedance

SECNCI (Secondary NCI Code):
- 04 = Number of physical wires at CDP
- DA = Data stream in VG frequency at the customer designated secondary terminal location
- 2 = 600 Ohms impedance
- S = Sealing current option for 4-wire transmission

In the above example the NCI (Network Channel Interface) code is the interface requested at the customer's POT (Point of Termination) and the SECNCI (Secondary Network Channel Interface) code represents the interface at the end office serving the End User.

APPROVED FOR FILING - THE PUBLIC SERVICE COMMISSION OF SOUTH CAROLINA - JULY 15, 2014

Access Service Interfaces and Transmission Specifications

15.2 Special Access Service (Cont'd)

Example No. 2: If the customer wishes to order a FX circuit to a station, with 600 Ohms impedance, loop start signaling, which is 4-wire at the CDP and 2-wire at the end-user, the customer might specify:

NC	NCI	SECNCI
LC--	04LO2	02LS2

NC Code:
LC = Voice Grade Channel Service, VG2
-- = No Optional Features

NCI Code:
04 = Number of physical wires at CDP
LO = Loop start, loop signaling - open end
2 = 600 Ohms impedance

SECNCI (Secondary NCI Code):
02 = Number of physical wires at CDP
LS = Loop start signaling - closed end
2 = 600 Ohms impedance

Example No. 3: If the customer wishes to order a 1.544 Mbps Hi-cap facility with no channel options such as CO multiplexing, the customer might specify the following:

NC	NCI	SECNCI
HC--	04DS9-15	04DS9-15

NC Code:
HC = High Capacity Channel Service, HC1
-- = No Optional Features

NCI, SECNCI Code:
04 = Number of physical wires at CDP
DS = Digital hierarchy interface
9 = 100 Ohms impedance
15 = 1.544 Mbps (DS1) format

The preceding three examples use information contained in Special Report SR-STS-000307.

APPROVED FOR FILING - THE PUBLIC SERVICE COMMISSION OF SOUTH CAROLINA - JULY 15, 2014

Access Service Interfaces and Transmission Specifications

15.2 Special Access Service (Cont'd)

15.2.1 Network Channel (NC) Codes

In order to determine the NC code appropriate for the service to be ordered, the type of Special Access Service the customer wishes must be identified. This identification is accomplished by a Service Designator (SD) code. The broad categories of Service Designator codes (e.g., VG, MT, TG, etc.) are set forth in Section 7. preceding. Variations within service type (e.g., VG1, MTC, TG2, etc.) are described in the various Technical Publications cited in (A) through (G) following.

Having determined the specific service type to be ordered and its SD code, and having used the appropriate Technical Publication, the customer should match the SD code to the NC code using the following matrices. Once the NC code has been determined, the Network Channel Interface (NCI) code may be developed using the information set forth in 15.2.2 following and the guidelines concerning specific parameters available for each service type as set forth in the specified Technical Publication.

(A) Technical Specifications Packages Metallic Service

	Package			
SD Code NC Code	MTC* MQ	MT1 NT	MT2 NU	MT3 NV
Parameter				
DC Resistance Between Conductors	X	X	X	
Loop Resistance	X			X
Shunt Capacitance	X			X
Optional Features and Functions				
Three Premises Bridging	X	X		X
Series Bridging	X		X	

The technical specifications are described in Technical Reference TR-NPL-000336.

* All parameters are available within ranges selected by the customer where technically feasible.

APPROVED FOR FILING - THE PUBLIC SERVICE COMMISSION OF SOUTH CAROLINA - JULY 15, 2014

Access Service Interfaces and Transmission Specifications

15.2 Special Access Service (Cont'd)

15.2.1 Network Channel (NC) Codes (Cont'd)

(B) Technical Specifications Packages Telegraph Grade Service

	Package		
SD Code	TGC*	TG1	TG2
NC Code	NQ	NW	NY
Parameter			
Telegraph Distortion	X	X	X
Optional Features and Functions			
Telegraph Bridging	X	X	X

The technical specifications are described in Technical Reference TR-NPL-000336.

* All parameters are available within ranges selected by the customer where technically feasible.

APPROVED FOR FILING - THE PUBLIC SERVICE COMMISSION OF SOUTH CAROLINA - JULY 15, 2014

Access Service Interfaces and Transmission Specifications

15.2 Special Access Service (Cont'd)

15.2.1 Network Channel (NC) Codes (Cont'd)

(C) Technical Specifications Packages Voice Grade Service

	Package VG													
SD Code	C*	1	2	3	4	5	6	7	8	9	10	11	12	W
NC Code	LQ	LB	LC	LD	LE	LF	LG	LH	LJ	LK	LN	LP	LR	SE
Parameter														
Attenuation Distortion	X	X	X	X	X	X	X	X	X	X	X	X	X	X
C-Message Noise	X	X	X	X	X	X	X	X	X	X	X	X	X	X
Echo Control	X	X	X	X		X		X	X	X		X	X	X
Envelope Delay Distortion	X						X	X	X	X	X	X	X	X
Frequency Shift	X						X	X	X	X	X	X	X	X
Impulse Noise	X					X	X	X	X	X	X	X	X	X
Intermodulation Distortion	X						X	X	X	X	X	X	X	X
Loss Deviation	X	X	X	X	X	X	X	X	X	X	X	X	X	X
Phase Hits, Gain Hits, and Dropouts	X						X	X	X	X	X	X	X	X
Phase Jitter	X						X	X	X	X	X	X	X	X
Signal-to-C Message Noise					X									
Signal-to-C Notch Noise	X					X	X	X	X	X	X	X	X	X

The technical specifications for these parameters (except for dropouts, phase hits, and gain hits) are described in Technical References TR-NPL-000334 and TR-TSY-000335. The technical specifications for dropouts, phase hits, and gain hits are described in Technical Reference PUB 41004, Table 4.

* The desired parameters are selected by the customer from the list of available parameters.

APPROVED FOR FILING - THE PUBLIC SERVICE COMMISSION OF SOUTH CAROLINA - JULY 15, 2014

Access Service Interfaces and Transmission Specifications

15.2 Special Access Service (Cont'd)

15.2.1 Network Channel (NC) Codes (Cont'd)

(C) Technical Specifications Packages Voice Grade Service (Cont'd)

	Package VG													
SD Code	C*	1	2	3	4	5	6	7	8	9	10	11	12	W
NC Code	LQ	LB	LC	LD	LE	LF	LG	LH	LJ	LK	LN	LP	LR	SE
Optional Features and Functions														
Central Office Bridging Capability	X		X			X	X				X	X	X	
Central Office Multiplexing	X						X							
Conditioning:														
. C-Type	X					X	X	X	X	X	X			
. Improved Attenuation Distortion	X					X	X	X	X	X	X			
. Improved Envelope Delay Distortion	X					X	X	X	X	X	X			
. Sealing Current	X						X							
. Data Capability	X						X	X			X			
. Telephoto Capability	X											X		
Customer Specified Premises Receive Level	X		X	X				X	X	X				
Improved Return Loss For Effective Four-Wire Transmission	X	X	X	X	X	X	X	X	X	X	X	X	X	
For Effective Two-Wire Transmission	X		X	X				X						
Improved Two-Wire Voice Transmission														X
PPSN Interface Arrangement	X									X				
Selective Signaling Arrangement	X		X			X	X				X	X	X	
Signaling Capability	X	X	X	X				X	X	X				
Transfer Arrangement	X	X	X	X	X	X	X	X	X	X	X	X	X	

APPROVED FOR FILING - THE PUBLIC SERVICE COMMISSION OF SOUTH CAROLINA - JULY 15, 2014

Access Service Interfaces and Transmission Specifications

15.2 Special Access Service (Cont'd)

15.2.1 Network Channel (NC) Codes (Cont'd)

(C) Technical Specifications Packages Voice Grade Service (Cont'd)

	Package				
SD Code	APC*	AP1	AP2	AP3	AP4
NC Code	PQ	PE	PF	PJ	PK
Parameter					
Actual Measured Loss	X	X	X	X	X
Amplitude Tracking		X			
Crosstalk	X	X	X	X	X
Distortion Tracking		X			
Gain/Frequency Distortion	X	X	X	X	X
Group Delay	X				
Noise	X	X	X	X	X
Phrase Tracking	X				
Short-Term Gain Stability	X				
Short-Term Loss	X				
Total Distortion	X	X	X	X	X
Optional Features and Functions					
Central Office Bridging Capability	X	X	X	X	X
Gain Conditioning	X	X	X	X	X
Stereo	X				X

The technical specifications are described in Technical Reference TR-NPL-000337 and associated Addendum.

* The desired parameters are selected by the customer from the list of available parameters.

APPROVED FOR FILING - THE PUBLIC SERVICE COMMISSION OF SOUTH CAROLINA - JULY 15, 2014

Access Service Interfaces and Transmission Specifications

15.2 Special Access Service (Cont'd)

15.2.1 Network Channel (NC) Codes (Cont'd)

(E) Technical Specifications Packages Video Service

	Package		
SD Code	TVC*	TV1	TV2
NC Code	TQ	TV	TW
Video Parameters			
Insertion Gain	X	X	X
Field-Time Distortion	X	X	X
Line-Time Distortion	X	X	X
Short-Time Distortion	X	X	X
Chrominance-Luminance Gain Inequality	X	X	X
Chrominance-Luminance Delay Inequality	X	X	X
Amplitude/Frequency Characteristic	X	X	X
Luminance Non-Linear Distortion	X	X	X
Chrominance Non-Linear Gain Distortion	X	X	X
Chrominance Non-Linear Phase Distortion	X	X	X
Transient Synchronizing Signal Non-Linearity	X	X	X
Dynamic Gain Distortion			
- Picture Signal	X	X	X
- Synchronizing Signal	X	X	X
Differential Gain	X	X	X
Differential Phase	X	X	X
Chrominance-Luminance Intermodulation	X	X	X

* The desired parameters are selected by the customer from the list of available parameters.

APPROVED FOR FILING - THE PUBLIC SERVICE COMMISSION OF SOUTH CAROLINA - JULY 15, 2014

Access Service Interfaces and Transmission Specifications

15.2 Special Access Service (Cont'd)

15.2.1 Network Channel (NC) Codes (Cont'd)

(E) Technical Specifications Packages Video Service (Cont'd)

	Package		
SD Code	TVC*	TV1	TV2
NC Code	TQ	TV	TW
Audio Channel Parameters Associated with Video Service			
Insertion Gain	X	X	X
Amplitude/Frequency Characteristic	X	X	X
Total Harmonic Distortion & Noise	X	X	X
Maximum Steady-State Test Levels	X	X	X
Gain Differential Between Channels	X	X	
Phase Differential Between Channels	X	X	
Crosstalk	X	X	X
Audio-To-Video Time Differential	X	X	X

The technical specifications are described in Technical Reference TR-NPL-000338.

* The desired parameters are selected by the customer from the list of available parameters.

APPROVED FOR FILING - THE PUBLIC SERVICE COMMISSION OF SOUTH CAROLINA - JULY 15, 2014

Access Service Interfaces and Transmission Specifications

15.2 Special Access Service (Cont'd)

15.2.1 Network Channel (NC) Codes (Cont'd)

(F) Technical Specifications Packages Digital Data Service

	Package					
SD Code	D1	D2	D3	D4	D5	D6
NC Code	XA	XB	XG	XH	XE	YN
Parameter/Hubbed						
Error-Free Seconds	X	X	X	X	X	X
Optional Features and Functions/Hubbed						
Central Office Bridging Capability	X	X	X	X	X	X
PPSN Interface Transfer Arrangement	X	X	X	X	X	X
Transfer Arrangement	X	X	X	X	X	X

The Telephone Company will provide a channel capable of meeting a monthly average performance equal to or greater than 99.875% error-free seconds (if provided through a Digital Data hub) while the channel is in service, if it is measured through a CSU equivalent which is designed, manufactured, and maintained to conform with the specifications contained in Technical Reference TR-NPL-000341.

	Package					
SD Code	D1	D2	D3	D4	D5	D6
NC Code	XA	XB	XG	XH	XE	YN
Optional Features and Functions/Hubbed						
Public Packet Data Arrangement				X	X	

Voltages which are compatible with Digital Data Service are delineated in Technical Reference TR-NWT-00341.

APPROVED FOR FILING - THE PUBLIC SERVICE COMMISSION OF SOUTH CAROLINA - JULY 15, 2014

Access Service Interfaces and Transmission Specifications

15.2 Special Access Service (Cont'd)

15.2.1 Network Channel (NC) Codes (Cont'd)

(G) Technical Specifications Packages High Capacity Service

	Package					
SD Code	HC0	HC1	HC1C	HC2	HC3	HC4
NC Code	HS	HC	HD	HE	HF	HG
Parameters						
Error-Free Seconds		X				
Optional Features and Functions						
Automatic Loop Transfer			X			
Central Office Multiplexing:						
DS4 to DS1						X
DS3 to DS1					X	
DS2 to DS1				X		
DS1C to DS1			X			
DS1 to Voice		X				
DS1 to DS0		X				
DS0 to Subrate*	X					
Transfer Arrangement		X				
Clear Channel Capability		X				

A channel with technical specifications package HC1 will be capable of an error-free second performance of 98.75% over a continuous 24 hour period as measured at the 1.544 Mbps rate through a CSU equivalent which is designed, manufactured, and maintained to conform with the specifications contained in Technical Reference PUB 62411.

* Available only on a channel of 1.544 Mbps facility to a Telephone Company hub.

APPROVED FOR FILING - THE PUBLIC SERVICE COMMISSION OF SOUTH CAROLINA - JULY 15, 2014

Access Service Interfaces and Transmission Specifications

15.2 Special Access Service (Cont'd)

15.2.2 Network Channel Interface (NCI) Codes

The electrical interface with the Telephone Company for Special Access Services, is defined by an interface code. There are interface codes for both the customer designated premises and the point of termination. Three examples of NCI codes are found in 15.2 preceding.

APPROVED FOR FILING - THE PUBLIC SERVICE COMMISSION OF SOUTH CAROLINA - JULY 15, 2014

Access Service Interfaces and Transmission Specifications

15.2 Special Access Service (Cont'd)

15.2.2 Network Channel Interface (NCI) Codes (Cont'd)

(A) Parameter Codes and Options

Parameter Code	Option	Definition
AB	-	accepts 20 Hz ringing signal at customer's point of termination
AC	-	accepts 20 Hz ringing signal at customer's end user's point of termination
AH	-	analog high capacity interface
	- B	60 kHz to 108 kHz (12 channels)
	- C	312 kHz to 552 kHz (60 channels)
	- D	564 kHz to 3084 kHz (600 channels)
CT	-	Centrex Tie Trunk Termination
CS	-	digital hierarchy interface at Digital Cross Connect System (DCS)
	- 15	1.544 Mbps (DS1) ANSI Extended Superframe (ESF) Format and B8ZSClear Channel Capability
	- 15A	1.544 Mbps (DS1) Superframe (SF) format
	- 15B	1.544 Mbps (DS1) Superframe (SF) format and B8ZS Clear Channel Capability
	- 15K	1.544 Mbps (DS1) Extended Superframe (ESF)
DA	-	data stream in VF frequency band at customer's end user's point of termination
DB	-	data stream in VF frequency band at customer's point of termination
	- 10	VF for TG1 and TG2
	- 43	VF for 43 Telegraph Carrier type signals, TG1 and TG2
DC	-	direct current or voltage
	- 1	monitoring interface with series RC combination (McCulloh format)
	- 2	Telephone Company energized alarm channel
	- 3	Metallic facilities (DC continuity) for direct current/low frequency control signals or slow speed data (30 baud)
DD	-	DATAPHONE Select-A-Station (and TABS) interface at customer's point of termination
DE	-	DATAPHONE Select-A-Station (and TABS) interface at the customer's end user's point of termination

APPROVED FOR FILING - THE PUBLIC SERVICE COMMISSION OF SOUTH CAROLINA - JULY 15, 2014

Access Service Interfaces and Transmission Specifications

15.2 Special Access Service (Cont'd)

15.2.2 Network Channel Interface (NCI) Codes (Cont'd)

(A) Parameter Codes and Options (Cont'd)

Parameter (Cont'd)

Code	Option	Definition
DS -		digital hierarchy interface
-	15	1.544 Mbps (DS1) format per PUB 41451 plus D4
-	15E	8-bit PCM encoded in one 64 kbps of the DS1 signal
-	15F	8-bit PCM encoded in two 64 kbps of the DS1 signal
-	15G	8-bit PCM encoded in three 64 kbps of the DS1 signal
-	15H	14/11-bit PCM encoded in six 64 kbps of the DS1 signal
-	15J	1.544 Mbps format per PUB 62411
-	15K	1.544 Mbps format per PUB 62411 plus extended framing format
-	15L	1.544 Mbps (DS1) with SF signaling
-	27	274.176 Mbps (DS4)
-	27L	274.176 Mbps (DS4) with SF signaling
-	31	3.152 Mbps (DS1C)
-	31L	3.152 Mbps (DS1C) with SF signaling
-	44	44.736 Mbps (DS3)
-	44L	44.736 Mbps (DS3) with SF signaling
-	63	6.312 Mbps (DS2)
-	63L	6.312 Mbps (DS2) with SF signaling
DU -		digital access interface
-	24	2.4 kbps
-	48	4.8 kbps
-	19	19.2 Kbps
-	56	56.0 kbps
-	96	9.6 kbps
-	64	64.0 Kbps
-	A	1.544 Mbps format per PUB 62411
-	B	1.544 Mbps format per PUB 62411 plus D4
-	C	1.544 Mbps format per PUB 62411 plus extended framing format
-	1KN	1.544 Mbps ANSI Extended Superframe (ESF) Format without line power
-	1SN	1.544 Mbps ANSI Extended Superframe (ESF) Format with B8ZS Clear Channel Capability and without line power
-	AN	1.544 Mbps free-framing format without line power (only avail. to U.S. Govt. agencies)
-	BN	1.544 Mbps Superframe (SF) Format without line power

APPROVED FOR FILING - THE PUBLIC SERVICE COMMISSION OF SOUTH CAROLINA - JULY 15, 2014

Access Service Interfaces and Transmission Specifications

15.2 Special Access Service (Cont'd)

15.2.2 Network Channel Interface (NCI) Codes (Cont'd)

(A) Parameter Codes and Options (Cont'd)

Parameter (Cont'd)

Code		Option	Definition
	-	DN	1.544 Mbps Superframe (SF) Format with B8ZS Clear Channel Capability without line power
DX	-		duplex signaling interface at customer's point of termination
DY	-		duplex signaling interface at customer's end user's point of termination
EA	-	E	Type I E&M Lead Signaling. Customer at POT or customer's end user at POT originates on E Lead.
EA	-	M	Type I E&M Lead Signaling. Customer at POT or customer's end user at POT originates on M Lead.
EB	-	E	Type II E&M Lead Signaling. Customer at POT or customer's end user at POT originates on E Lead.
EB	-	M	Type II E&M Lead Signaling. Customer at POT or customer's end user at POT originates on M Lead.
EC	-		Type III E&M signaling at customer POT
EX	-	A	tandem channel unit signaling for loop start or ground start and customer supplies open end (dial tone, etc.) functions.
EX	-	B	tandem channel unit signaling for loop start or ground start and customer supplies closed end (dial pulsing, etc.) functions.
GO	-		ground start loop signaling - open end function by customer or customer's end user
GS	-		ground start loop signaling - closed end function by customer or customer's end user
IA	-		E.I.A. (25 pin RS-232)
LA	-		end user loop start loop signaling - Type A OPS registered port open end
LB	-		end user loop start loop signaling - Type B OPS registered port open end
LC	-		end user loop start loop signaling - Type C OPS registered port open end

APPROVED FOR FILING - THE PUBLIC SERVICE COMMISSION OF SOUTH CAROLINA - JULY 15, 2014

Access Service Interfaces and Transmission Specifications

15.2 Special Access Service (Cont'd)

15.2.2 Network Channel Interface (NCI) Codes (Cont'd)

(A) Parameter Codes and Options (Cont'd)

Parameter (Cont'd)

Code		Option	Definition
LO	-		loop start loop signaling - open end function by customer or customer's end user
LR	-		20 Hz automatic ringdown interface at customer with Telephone Company provided PLAR
LS	-		loop start loop signaling - closed end function by customer or customer's end user
NO	-		no signaling interface, transmission only
PG	-		program transmission - no dc signaling
	-	1	nominal frequency from 50 to 15000 Hz
	-	3	nominal frequency from 200 to 3500 Hz
	-	5	nominal frequency from 100 to 5000 Hz
	-	8	nominal frequency from 50 to 8000 Hz
PR	-		protective relaying*
RV	-	O	reverse battery signaling, one way operation, originate by customer
	-	T	reverse battery signaling, one way operation, terminate function by customer or customer's end user
SF	-		single frequency signaling with VF band at either customer POT or customer's end user POT
TF	-		telephotograph interface
TT	-		telegraph/teletypewriter interface at either customer POT or customer's end user POT
	-	2	20.0 milliamperes
	-	3	3.0 milliamperes
	-	6	62.5 milliamperes
TV	-		television interface
	-	1	combined (diplexed) video and one audio signal
	-	2	combined (diplexed) video and two audio signals
	-	5	video plus one (or two) audio 5 kHz signal(s) or one (or two) two wire
	-	15	video plus one (or two) audio 15 kHz signal(s)

* Available only for the transmission of audio tone protective relaying signals used in the protection of electric power systems during fault conditions.

APPROVED FOR FILING - THE PUBLIC SERVICE COMMISSION OF SOUTH CAROLINA - JULY 15, 2014

Access Service Interfaces and Transmission Specifications

15.2 Special Access Service (Cont'd)

15.2.2 Network Channel Interface (NCI) Codes (Cont'd)

(B) Impedance

The nominal reference impedance with which the channel will be terminated for the purpose of evaluating transmission performance:

Value (ohms)	Code(s)
110	0
150	1
600	2
900	3+
135	5
75	6
124	7
Variable	8
100	9

.

* For those interface codes with a 4-wire transmission path at the customer designated POT, rather than a standard 900 ohm impedance the code (3) denotes a customer provided transmission equipment termination. Such terminations were provided to customers in accordance with the F.C.C. Docket No. 20099 Settlement Agreement.

APPROVED FOR FILING - THE PUBLIC SERVICE COMMISSION OF SOUTH CAROLINA - JULY 15, 2014

Access Service Interfaces and Transmission Specifications

15.2 Special Access Service (Cont'd)

15.2.2 Network Channel Interface (NCI) Codes (Cont'd)

(C) Compatible Network Channel Interfaces

The following tables show the Network Channel Interface codes (NCIs) which are compatible:

(1) Metallic

Compatible CIs

2DC8-1	2DC8-2
2DC8-3	2DC8-3
4DS8	2DC8-1
4DS8	2DC8-2

(2) Telegraph Grade

Compatible CIs		Compatible CIs	
2DB2-10	10IA8	4DB2-10	10IA8
	2TT2-2		2TT2-2
	4TT2-2		4TT2-2
2DB2-43*	10IA8	4DB2-43*	10IA8
	2TT2-2		2TT2-6
	2TT2-6		4TT2-2
	4TT2-2		
		4DS8-	10IA8
2TT2-2	2TT2-2		2TT2-2
			2TT2-6
2TT2-3	2TT2-2		4TT2-2
	4TT2-2		4TT2-6
2TT2-6	2TT2-6	4TT2-2	4TT2-2
	4TT2-6		
		4TT2-6	2TT2-6

* Supplemental Channel Assignment information required.

APPROVED FOR FILING - THE PUBLIC SERVICE COMMISSION OF SOUTH CAROLINA - JULY 15, 2014

Access Service Interfaces and Transmission Specifications

15.2 Special Access Service (Cont'd)

15.2.2 Network Channel Interface (NCI) Codes (Cont'd)

(C) Compatible Network Channel Interfaces (Cont'd)

(3) Voice Grade

Compatible CIs		Compatible CIs		Compatible CIs	
2AB2	2AC2	2DB2	2DA2	2LR2	2LR2
2AB3	2AC2	2DB3	2DA2	2LR3	2LR2
2CT3	2DY2	2DX3	2LA2	2LS	2GS
	4DS8		2LB2		2LS
	4DX2		2LC2		4GS
	4DX3		2LO3		4LS
	4DY2		2LS2		
	4EA2-E	2LS3	2LS2		2LA2
	4EA2-M				2LB2
	4SF2	2GO2	2GS2		2LC2
	4SF3		2GS3		
	6DX2			2LS3	2LA2
	6DY2	2GO3	2GS2		2LB2
	6DY3		2GS3		2LC2
	6EA2-E				
	6EA2-M	2GS	2GS	2N02	2DA2
	6EB2-E		2LS		2N02
	6EB2-M		4GS		
	6EB3-E		4LS	2N03	2N02
	8EB2-E				2PR2
	8EB2-M	2L02	2LS2		
	8EC2	2LS3	2TF3		2TF2
	9DY2				
	9DY3	2L03	2LS2		
	9EA2		2LS3		
	9EA3				

APPROVED FOR FILING - THE PUBLIC SERVICE COMMISSION OF SOUTH CAROLINA - JULY 15, 2014

Access Service Interfaces and Transmission Specifications

15.2 Special Access Service (Cont'd)

15.2.2 Network Channel Interface (NCI) Codes (Cont'd)

(C) Compatible Network Channel Interfaces (Cont'd)

(3) Voice Grade (Cont'd)

Compatible CIs		Compatible CIs		Compatible CIs	
4AB2	2AC2				
	4AB2				
	4AC2				
	4SF2				
4AB3	2AC2				
	4AC2				
	4SF2				
4AC2	2AC2				
	4AC2				
		4DS8-	2AC2	4DS8-	4DG2
			2DA2		4LR2
			2DY2		4LS2
			2GO2		4NO2
4DA2	4DA2		2GO3		4PR2
			2GS2		4RV2-T
4DB2	2DA2		2GS3		4SF2
	2NO2		2LA2		4SF3
	2PR2		2LB2		4TF2
	4DA2		2LC2		6DA2
	4DB2		2LO2		6DY2
	4NO2		2LO3		6DY3
	4PR2		2LR2		6EA2-E
	6DA2		2LS2		6EA2-M
			2LS3		6EB2-E
4DD3	2DE2		2NO2		6EB2-M
	4DE2		2PR2		6GS2
			2RV2-T		6LS2
			2TF2		8EB2-E
			4AC2		8EB2-M
			4DA2		9DY2
			4DE2		9DY3
			4DX2		9EA2
			4DX3		9EA3
			4DY2		
			4EA2-E		
			4EA2-M		

APPROVED FOR FILING - THE PUBLIC SERVICE COMMISSION OF SOUTH CAROLINA - JULY 15, 2014

Access Service Interfaces and Transmission Specifications

15.2 Special Access Service (Cont'd)

15.2.2 Network Channel Interface (NCI) Codes (Cont'd)

(C) Compatible Network Channel Interfaces (Cont'd)

(3) Voice Grade (Cont'd)

Compatible CIs		Compatible CIs		Compatible CIs	
4DX2	2DY2	4DX2	8EB2-E	4DX3	6DY2
	2LA2		8EB2-M		6DY3
	2LB2		9DY2		6EA2-E
	2LC2		9DY3		6EA2-M
	2LO3		9EA2		6EB2-E
	2LS2		9EA3		6EB2-M
	2LS3				6LS2
	2RV2-T	4DX3	2DY2		8EB2-E
	4DX2		2LA2		8EB2-M
	4DY2		2LB2		9DY2
	4EA2-E		2LC2		9DY3
	4EA2-M		2LO3		9EA2
	4LS2		2LS2		9EA3
	4RV2-T		2LS3		
	4SF2		2RV2-T	4DY2	2DY2
	4SF3		4DX2		4DY2
	6DY2		4DX3		
	6DY3		4DY2		
	6EA2-E		4EA2-E		
	6EA2-M		4EA2-M		
	6EB2-E		4LS2		
	6EB2-M		4RV2-T		
	6LS2		4SF2		
			4SF3		

APPROVED FOR FILING - THE PUBLIC SERVICE COMMISSION OF SOUTH CAROLINA - JULY 15, 2014

Access Service Interfaces and Transmission Specifications

15.2 Special Access Service (Cont'd)

15.2.2 Network Channel Interface (NCI) Codes (Cont'd)

(C) Compatible Network Channel Interfaces (Cont'd)

(3) Voice Grade (Cont'd)

Compatible CIs		Compatible CIs		Compatible CIs	
4EA2-E	2DY2	4EA3-E	2DY2	4GO2	2GO2
	4DY2		4DY2		2GO3
	4EA2-E		4EA2-E		2GS2
	4EA2-M		4EA2-M		2GS3
	4SF2		4SF2		4GS2
	6DY2		6DY2		4SF2
	6DY3		6DY3		6GS2
	6EB2-E		6EA2-E		
	6EB2-M		6EA2-M	4GO3	2GO2
	8EB2-E		6EB2-E		2GS2
	8EB2-M		6EB2-M		2GS3
	9DY2		8EB2-E		4GS2
	9DY3		8EB2-M		4SF2
			9DY2		6GS2
4EA2-M	2DY2		9DY3		
	4DY2		9EA2		
	4EA2-M		9EA3	4GS	2GS
	4SF2				2LS
	6DY2				4GS
	6DY3				4LS
	6EB2-E				
	6EB2-M				
	8EB2-E				
	8EB2-M				
	9DY2				
	9DY3				

APPROVED FOR FILING - THE PUBLIC SERVICE COMMISSION OF SOUTH CAROLINA - JULY 15, 2014

Access Service Interfaces and Transmission Specifications

15.2 Special Access Service (Cont'd)

15.2.2 Network Channel Interface (NCI) Codes (Cont'd)

(C) Compatible Network Channel Interfaces (Cont'd)

(3) Voice Grade (Cont'd)

Compatible CIs		Compatible CIs		Compatible CIs	
4LO2	2LS2	4LS3	2LA2	4SF2	2LO3
	2LS3		2LB2		2LR2
	4LS2		2LC2		2LS2
	4SF2		2LO2		2LS3
	6LS2		2LO3		2RV2-T
			4SF2		4AC2
4LO3	2LS2				4DY2
	2LS3	4NO2	2DA2		4LS2
	4LS2		2DE2		4RV2-T
	4SF2		2NO2		4SF2
	6LS2		4DA2		6DY2
			4DE2		6DY3
4LR2	2LR2		4NO2		6GS2
	4LR2		6DA2		9DY2
	4SF2				9DY3
		4RV2-0	2RV2-T		
4LR3	2LR2		4RV2-T	4SF3	2DY2
	4LR2		4SF2		2GO3
	4SF2				2GS2
					2GS3
4LS	2GS	4SF2	2AC2		2LA2
	2LS		2DY2		2LB2
	4GS		2GS2		2LC2
	4LS		2GS3		2LO3
			2LA2		2LR2
4LS2	2LA2		2LB2		
	2LB2		2LC2		
	2LC2				
	2LO2				
	2LO3				

APPROVED FOR FILING - THE PUBLIC SERVICE COMMISSION OF SOUTH CAROLINA - JULY 15, 2014

Access Service Interfaces and Transmission Specifications

15.2 Special Access Service (Cont'd)

15.2.2 Network Channel Interface (NCI) Codes (Cont'd)

(C) Compatible Network Channel Interfaces (Cont'd)

(3) Voice Grade (Cont'd)

Compatible CIs		Compatible CIs		Compatible CIs	
4SF3	2LS2	6DA	4DA2	6DY3	2DY2
	2LS3		6DA2		4DY2
	2RV2-T				6DY2
	4DY2	6DX2	2DY2		6DY3
	4EA2-E		4DY2		
	4EA2-M		4EA2-E	6EA2-E	2AC2
	4GS2				
	4LR2		4EA2-M		2DY2
	4LS2		4SF2		2LA2
	4RV2-T		6DY2		2LB2
	4SF2		6DY3		2LC2
	4SF3		6EA2-E		2LO3
	6DY2		6EA2-M		2LS2
	6DY3		6EB2-E		2LS3
	6EB2-E		6EB2-M		2RV2-T
	6EB2-M		8EB2-E		4AC2
	6GS2		8EB2-M		4DY2
	6LS2		9DY2		4EA2-E
	9DY2		9DY3		4EA2-M
	9DY3		9EA2		4LS2
	9EA2		9EA3		4RV2-T
	9EA3				4SF2
		6DY2	2DY2		4SF3
4TF2	2TF2		4DY2		6DY2
	4TF2		6DY2		6DY3
					6EA2-E
					6EA2-M

APPROVED FOR FILING - THE PUBLIC SERVICE COMMISSION OF SOUTH CAROLINA - JULY 15, 2014

Access Service Interfaces and Transmission Specifications

15.2 Special Access Service (Cont'd)

15.2.2 Network Channel Interface (NCI) Codes (Cont'd)

(C) Compatible Network Channel Interfaces (Cont'd)

(3) Voice Grade (Cont'd)

Compatible CIs		Compatible CIs		Compatible CIs	
6EA2-E	6EB2-E	6EA2-M	6DY2	6EB3-E	2DY2
	6EB2-M		6DY3		4DY2
	6LS2		6EA2-M		4EA2-E
	8EB2-E		6EB2-E		4EA2-M
	8EB2-M		6EB2-M		4SF2
	9DY2		6LS2		6DY2
	9DY3		8EB2-E		6DY3
			8EB2-M		6EA2-E
6EA2-M	2AC2		9DY2		6EA2-M
	2DY2		9DY3		8EB2-E
	2LA2				8EB2-M
	2LB2	6EB2-E	2DY2		9DY2
	2LC2		4DY2		9DY3
	2LO3		4SF2		9EA2
	2LS2		6DY2		9EA3
	2LS3		6DY3		
	2RV2-T		6EB2-E	6EX2-A	2GS2
	4AC2		6EB2-M		2GS3
	4DY2		9DY2		2LS2
	4EA2-E		9DY3		2LS3
	4EA2-M				4GS2
	4LS2	6EB2-M	2DY2		4LS2
	4RV2-T		4DY2		4SF2
	4SF2		4SF2		6GS2
	4SF3		6DY2		6LS2
	6DY3				
			6EB2-M		
			9DY2		
			9DY3		

APPROVED FOR FILING - THE PUBLIC SERVICE COMMISSION OF SOUTH CAROLINA - JULY 15, 2014

Access Service Interfaces and Transmission Specifications

15.2 Special Access Service (Cont'd)

15.2.2 Network Channel Interface (NCI) Codes (Cont'd)

(C) Compatible Network Channel Interfaces (Cont'd)

(3) Voice Grade (Cont'd)

Compatible CIs		Compatible CIs		Compatible CIs	
6EX2-B	2GO3	8EB2-E	2AC2	8EB2-M	2AC2
	2LA2		2DY2		2DY2
	2LB2		2LA2		2LA2
	2LC2		2LB2		2LB2
	2LO2		2LC2		2LC2
	2LO3		2LO3		2LO3
	2LR2		2LS2		2LS2
	4LR2		2LS3		2LS3
	4SF2		2RV2-T		2RV2-T
			4AC2		4AC2
6GO2	2GO2		4DY2		4DY2
	2GS2		4LS2		4LS2
	2GS3		4RV2-T		4RV2-T
	4GS2		4SF2		4SF2
	4SF2		4SF3		4SF3
	6GS2		6DY2		6DY2
			6DY3		6DY3
6LO2	2LS2		6EB2-E		6EB2-E
	2LS3		6EB2-M		6EB2-M
	4LS2		6LS2		6LS2
	4SF2		8EB2-E		8EB2-M
	6LS2		8EB2-M		9DY2
			9DY2		9DY3
6LS2	2LA2		9DY3		
	2LB2				
	2LC2				
	2LO2				
	2LO3				
	4SF2				

APPROVED FOR FILING - THE PUBLIC SERVICE COMMISSION OF SOUTH CAROLINA - JULY 15, 2014

Access Service Interfaces and Transmission Specifications

15.2 Special Access Service (Cont'd)

15.2.2 Network Channel Interface (NCI) Codes (Cont'd)

(C) Compatible Network Channel Interfaces (Cont'd)

(3) Voice Grade (Cont'd)

Compatible CIs		Compatible CIs		Compatible CIs	
8EC2	2DY2	9DY2	2DY2	9EA3	2DY2
	4DY2		4DY2		4DY2
	4EA2-E		6DY2		4EA2-E
	4EA2-M		6DY3		4EA2-M
	4SF2		9DY2		6DY2
	6DY2				6DY3
	6DY3	9DY3	2DY2		6EA2-E
	6EA2-E		4DY2		6EA2-M
	6EA2-M		6DY2		6EB2-E
	6EB2-E		6DY3		6EB2-M
	6EB2-M		9DY2		8EB2-E
	8EB2-E		9DY3		8EB2-M
	8EB2-M				9DY2
	9DY2	9EA2	2DY2		9DY3
	9DY3		4DY2		9EA3
	9EA2		4EA2-E		
	9EA3		4EA2-M		
			6DY2		
			6DY3		
			6EA2-E		
			6EA2-M		
			6EB2-E		
			6EB2-M		
			8EB2-E		
			8EB2-M		
			9DY2		
			9DY3		
			9EA2		
			9EA3		

APPROVED FOR FILING - THE PUBLIC SERVICE COMMISSION OF SOUTH CAROLINA - JULY 15, 2014

Access Service Interfaces and Transmission Specifications

15.2 Special Access Service (Cont'd)

15.2.2 Network Channel Interface (NCI) Codes (Cont'd)

(C) Compatible Network Channel Interfaces (Cont'd)

(4) Program Audio

Compatible CIs		Compatible CIs	
2PG2-1	2PG1-1 2PG2-1	4DS8-15E	2PG1-3 2PG2-3
2PG2-3	2PG1-3 2PG2-3	4DS8-15F	2PG1-5 2PG2-5
2PG2-5	2PG1-5 2PG2-5	4DS8-15G	2PG1-8 2PG2-8
2PG2-8	2PG1-8 2PG2-8	4DA8-15H	2PG1-1 2PG2-1

APPROVED FOR FILING - THE PUBLIC SERVICE COMMISSION OF SOUTH CAROLINA - JULY 15, 2014

Access Service Interfaces and Transmission Specifications

15.2 Special Access Service (Cont'd)

15.2.2 Network Channel Interface (NCI) Codes (Cont'd)

(C) Compatible Network Channel Interfaces (Cont'd)

(5) Video

	Compatible CIs		Compatible CIs
2TV6-1	4TV6-15 4TV7-15	4TV7-5	4TV6-5 4TV7-5
2TV6-2	6TV6-15 6TV7-15	4TV7-15	4TV6-15 4TV7-15
2TV7-1	4TV6-15 4TV7-15	6TV6-5	6TV6-5 6TV7-5
2TV7-2	6TV6-15 6TV7-15	6TV6-15	6TV6-15 6TV7-15
4TV6-5	4TV6-5 4TV7-5	6TV7-5	6TV6-5 6TV7-5
4TV6-15	4TV6-15 4TV7-15	6TV7-15	6TV6-15 6TV7-15

APPROVED FOR FILING - THE PUBLIC SERVICE COMMISSION OF SOUTH CAROLINA - JULY 15, 2014

Access Service Interfaces and Transmission Specifications

15.2 Special Access Service (Cont'd)

15.2.2 Network Channel Interface (NCI) Codes (Cont'd)

(C) Compatible Network Channel Interfaces (Cont'd)

(6) Digital Data

Compatible CIs		Compatible CIs		Compatible CIs	
4DS8-15	4DS8-15+	4DU5-24	4DU5-24	6DU5-24	6DU5-24
	4DU5-24				
	4DU5-48	4DU5-48	4DU5-48	6DU5-48	6DU5-48
	4DU5-56				
	4DU5-96	4DU5-96	4DU5-96	6DU5-56	6DU5-56
	6DU5-24				
	6DU5-48	4DU8-56	4DU5-56	6DU5-96	6DU5-96
	6DU5-96				

\+ Available only as a cross connect of two digital channels at appropriate digital speeds at a Telephone Company hub.

APPROVED FOR FILING - THE PUBLIC SERVICE COMMISSION OF SOUTH CAROLINA - JULY 15, 2014

Access Service Interfaces and Transmission Specifications

15.2 Special Access Service (Cont'd)

15.2.2 Network Channel Interface (NCI) Codes (Cont'd)

(C) Compatible Network Channel Interfaces (Cont'd)

(7) High Capacity

	Compatible CIs		Compatible CIs
4DS0-63	4DS0-63 4DU8-A,B or C 6DU8-A,B or C	4DS8-15J	4DU8-A 6DU8-A
		4DS8-15K	4DU8-B 4DU8-C 6DU8-B 6DU8-C
4DS6-27	4DS6-27 4DU8-A,B or C 6DU8-A,B or C		
4DS6-44	4DS6-44 4DU8-A,B or C 6DU8-A,B or C	4DS8-31	4DS8-31 4DU8-A,B or C 6DU8-A,B or C
4DS8-15	4DS8-15+ 4DU8-B 6DU8-8	4DU8-A,B or C	4DU8-A,B or C

+ Available only as a cross connect of two individual channels of 1.544 Mbps facilities at a Telephone Company hub.

APPROVED FOR FILING - THE PUBLIC SERVICE COMMISSION OF SOUTH CAROLINA - JULY 15, 2014

Access Service Interfaces and Transmission Specifications

15.3 Directory Access Service

15.3.1 Interface Group and Premise Interface Codes

When Directory Access Service is combined with Feature Group B, C or D Switched Access Service, the Premises Interface Code for the combination will be the available Premises Interface Code provided for the Feature Group B, C or D Switched Access Service ordered by the customer. Premises Interface Codes are described in 15.1.1(G) preceding.

When Directory Access Service is provided as a separate trunk group (not in combination with Switched Access Service) Interface Groups 2 through 10 as set forth in 15.1.1 preceding are available. Only the following Premises Interface Codes are available when Directory Access Service is provided as a separate trunk group:

4DS9-15	6EA2-E	4RV2-O
4DS9-31	6EA2-M	4AH5-B
4DS0-63	4SF3	4AH6-C
4DS6-44		4AH6-D
4DS6-27		

APPROVED FOR FILING - THE PUBLIC SERVICE COMMISSION OF SOUTH CAROLINA - JULY 15, 2014

Access Service Interfaces and Transmission Specifications

15.3 Directory Access Service (Cont'd)

15.3.2 Standard Transmission Specifications

Following is a matrix illustrating the transmission specifications available with Directory Access Service. Descriptions of the Standard Transmission Specifications, Type A and B, are set forth respectively in 15.1.2(E) and (F) preceding.

Directory Access Service Provided in Combination with Switched Access Service	Transmission Specifications Type A	Type B
- Feature Group B - (Interface Groups 2 through 10)		X
- Feature Group C		X
- Feature Group D	X	
Directory Access Service Not Combined with Switched Access Service		
- Routed Direct to DA location (Interface Groups 2 through 10)		X
- Routed via an access tandem (Interface Groups 2 through 10)	X	

APPROVED FOR FILING - THE PUBLIC SERVICE COMMISSION OF SOUTH CAROLINA - JULY 15, 2014

Reserved For Future Use

CONTENTS

Page No.

APPROVED FOR FILING - THE PUBLIC SERVICE COMMISSION OF SOUTH CAROLINA - JULY 15, 2014

RESERVED FOR FUTURE USE

APPROVED FOR FILING - THE PUBLIC SERVICE COMMISSION OF SOUTH CAROLINA - JULY 15, 2014

Rates and Charges

CONTENTS

		Page No.
17.1	Common Line Access Service	1
	17.1.1 Carrier Common Line Access Service	1
17.2	Switched Access Service	2
	17.2.1 Nonrecurring Charges	2
	17.2.2 Local Transport	3
	17.2.3 End Office	4
	17.2.4 PRICE LIST	5
	17.2.5 Reserved For Future Use	5
	17.2.6 Assumed Minutes of Use	6
17.3	Special Access Service	7
	17.3.1 Surcharge for Special Access Service	7
	17.3.2 Metallic Service	7
	17.3.3 Telegraph Grade Service	8
	17.3.4 Voice Grade Service	9
	17.3.5 Program Audio Service	13
	17.3.6 Video Service	13
	17.3.7 Digital Data Service	14
	17.3.8 High Capacity Service	16
	17.3.9 Individual Case Basis	17
17.4	Other Services	18
	17.4.1 Access Ordering	18
	17.4.2 Additional Engineering	19
	17.4.3 Additional Labor	20
	17.4.4 Miscellaneous Services	21
	17.4.5 Reserved For Future Use	26
	17.4.6 Special Facilities Routing of Access Services	27
	17.4.7 Specialized Service or Arrangements	28

APPROVED FOR FILING - THE PUBLIC SERVICE COMMISSION OF SOUTH CAROLINA - JULY 15, 2014

Rates and Charges

17.1 Common Line Access Service

17.1.1 Carrier Common Line Access Service	Rate	
Regulations concerning Carrier Common Line Access are set forth in Section 3. preceding.		
Premium rate, per Originating Access Minute	$0.003409	
Premium rate, per Terminating Access Minute	$0.000000	(R)

APPROVED FOR FILING - THE PUBLIC SERVICE COMMISSION OF SOUTH CAROLINA - JULY 15, 2014

Rates and Charges

17.2 Switched Access Service

17.2.1 Nonrecurring Charges

(A) Local Transport - Installation

Per Entrance Facility	Initial	Additional	
- Voice Grade Two-Wire	$215.00	$215.00	(R)(I)
- Voice Grade Four-Wire	$215.00	$215.00	(R)(I)
- High Capacity DS1	$303.00	$303.00	(R)(R)
- High Capacity DS3	$333.00	$333.00	(R)(R)

(B) Interim NXX Translation Per Order

Per LATA or Market Area	$43.61	$21.51	

(C) FGC and FGD Conversion of Multifrequency Address Signaling to SS7 Signaling or SS7 Signaling to Multifrequency Address Signaling

- Per 24 Trunks Converted or Fraction thereof on a Per Order Basis	$112.00	$112.00	(R)

(D) Trunk Activation, per Order

- Per 24 Trunks Activated or Fraction thereof, on a Per Order Basis	$112.00	$112.00	(R)

(E) Local Transport - Installation Per Line or Trunk	$112.00	$112.00	(C)

(D)

(D)

APPROVED FOR FILING - THE PUBLIC SERVICE COMMISSION OF SOUTH CAROLINA - JULY 15, 2014

Rates and Charges

17.2 Switched Access Service (Cont'd)

17.2.2 Local Transport

	Rate	
- Entrance Facility		
- Voice Grade Two-Wire, per Termination	$11.80	(R)
- Voice Grade Four-Wire, per Termination	$18.88	
- High Capacity DS1, per Termination	$71.16	
- High Capacity DS3, per Termination	$1,253.65	
- Direct Trunked Transport		
- Direct Trunked Facility, per Mile		
- Voice Grade	$0.66	(R)
- High Capacity DSO	$3.95	
- High Capacity DS1	$12.77	(R)
- High Capacity DS3	$51.91	(R)
- Direct Trunked Termination, per Termination		
- Voice Grade	$8.85	(R)
- High Capacity DSO	$38.37	
- High Capacity DS1	$11.95	(R)
- High Capacity DS3	$429.00	(R)
- Multiplexing, per Arrangement		
- DS3 to DS1	$302.10	(R)
- DS1 to Voice	$149.70	(N)
- Carrier Identification Parameter (CIP)		
- Voice Grade	$3.19	
- DS1	$76.56	
- DS3	$2,143.68	
- Tandem Switched Transport		
- Tandem Switched Facility		
Per Originating Access Minute Per Mile	$0.000020	(T)
Per Terminating Access Minute Per Mile	$0.000243	(T)(I)
- Tandem Switched Termination		
Per Originating Access Minute Per Termination	$0.000180	(T)
Per Terminating Access Minute Per Termination	$0.000615	(T)(I)
- Tandem Switching		
Per Originating Access Minute Per Tandem	$0.000740	(T)
Per Terminating Access Minute Per Tandem	$0.000000	(T)(R)
- Tandem Switched Multiplexing		(N)
Per Terminating Access Minute	$0.000017	(N)
- Residual Interconnection Charge		
Per Access Minute	$0.000000	

APPROVED FOR FILING - THE PUBLIC SERVICE COMMISSION OF SOUTH CAROLINA - JULY 15, 2014

Rates and Charges

17.2 Switched Access Service (Cont'd)

17.2.2 Local Transport (Cont'd)

	Rate	
Network Blocking, Per Blocked Call		
Applies to FGD only	$0.008000	
800/888/877 Data Base Access Service Queries		
Per Completed Query:		
Basic	$0.004000	
Vertical Feature	$0.004500	

17.2.3 End Office

(A) Local Switching (LS1/LS2)

Per Originating Access Minute	$0.0057700	
Per Terminating Access Minute	$0.0028459	(R)

(B) Information Surcharge

- Per 100 Originating Access Minutes	$0.018700	
- Per 100 Terminating Access Minutes	$0.000000	

(C) End Office Common Trunk Port

Per Terminating Access Minute	$0.0005125	(R)

(D) End Office Direct Trunk Port

DS1 Per Trunk Port	$2.31	(T)(R)
Voice Grade Per Trunk Port	$0.00	(T)

APPROVED FOR FILING - THE PUBLIC SERVICE COMMISSION OF SOUTH CAROLINA - JULY 15, 2014

Rates and Charges

17.2 Switched Access Service (Cont'd)

17.2.4 RESERVED FOR FUTURE USE (C)

(D)

(D)

17.2.5 RESERVED FOR FUTURE USE

APPROVED FOR FILING - THE PUBLIC SERVICE COMMISSION OF SOUTH CAROLINA - JULY 15, 2014

Rates and Charges

17.2 Switched Access Service (Cont'd)

17.2.6 Assumed Minutes of Use		Assumed Minutes Per Month
(A)	Feature Group A, Two Way Calling (1510 Originating, 2685 Terminating)	4195
(B)	Feature Group A, Originating Only	1510
(C)	Feature Group A, Terminating Only	2685
(D)	Feature Group B, Two Way Calling (3132 Originating, 5568 Terminating)	8700
(E)	Feature Group B, Originating Only	3132
(F)	Feature Group B, Terminating Only	5568

APPROVED FOR FILING - THE PUBLIC SERVICE COMMISSION OF SOUTH CAROLINA - JULY 15, 2014

Rates and Charges

17.3 Special Access Service

17.3.1 Surcharge for Special Access Service

	Monthly Rate
- Per Voice Grade Equivalent	$25.00

17.3.2 Metallic Service

Regulations concerning Metallic Service are set forth in 7.4 preceding. Rates are developed on an individual case basis (ICB).

APPROVED FOR FILING - THE PUBLIC SERVICE COMMISSION OF SOUTH CAROLINA - JULY 15, 2014

Rates and Charges

17.3 Special Access Service (Cont'd)

17.3.3 Telegraph Grade Service

Regulations concerning Telegraph Grade Service are set forth in 7.5 preceding. Rates are developed on an individual case basis (ICB).

APPROVED FOR FILING - THE PUBLIC SERVICE COMMISSION OF SOUTH CAROLINA - JULY 15, 2014

Rates and Charges

17.3 Special Access Service (Cont'd)

17.3.4 Voice Grade Service

Regulations concerning Voice Grade Service are set forth in 7.6 preceding.

		Monthly Rate	Nonrecurring Charge Initial	Nonrecurring Charge Additional
(A)	Channel Termination Per Termination			
	- Two-Wire	$42.40	$234.00	$234.00
	- Four Wire	$67.77	$234.00	$234.00

(B) Channel Mileage

(1) Channel Mileage Facility Per Mile $2.35

(2) Channel Mileage Termination Per Termination $31.27

(C) Optional Features and Functions

(1) Bridging

(a) Voice Bridging Per Port

Two-Wire/Four Wire

- 2 Wire/4 Wire $4.75

APPROVED FOR FILING - THE PUBLIC SERVICE COMMISSION OF SOUTH CAROLINA - JULY 15, 2014

Rates and Charges

17.3 Special Access Service (Cont'd)

17.3.4 Voice Grade Service (Cont'd)

(C) Optional Features and Functions (Cont'd)

(1) Bridging (Cont'd)

	Monthly Rate
(b) Data Bridging per port	
- 2 Wire/4 Wire	$4.75
(c) Telephoto Bridging per port	
- 2 Wire/4 Wire	$4.75
(d) DATAPHONE Select-A-Station Bridging	
Sequential Arrangement, Ports Per channel connected	
- Two-Wire	$21.31
- Four-Wire	$113.06
Addressable Arrangement, Ports Per channel connected	
- Two-Wire	$22.82
- Four-Wire	$116.16
(e) Telemetry and Alarm Bridging	
Active Bridging Channel Connections Per channel connected	
- Split Band	$8.89
- Summation	$3.47
Passive Bridging Channel Connections Per channel connected	$0.24

APPROVED FOR FILING - THE PUBLIC SERVICE COMMISSION OF SOUTH CAROLINA - JULY 15, 2014

Rates and Charges

17.3 Special Access Service (Cont'd)

17.3.4 Voice Grade Service (Cont'd)

(C) Optional Features and Functions (Cont'd)

		Monthly Rate
(2)	Conditioning Per Termination	
	- C-Type	$16.30
	- Data Capability	$3.94
	- Telephoto Capability	$8.67
	- Sealing Current	None
(3)	Improved Return Loss for Effective Two-Wire or Four-Wire Transmission Per Termination	
	- 2 Wire/4 Wire	$7.15
(4)	Customer Specified Receive Level per two-wire termination	$3.44

APPROVED FOR FILING - THE PUBLIC SERVICE COMMISSION OF SOUTH CAROLINA - JULY 15, 2014

Rates and Charges

17.3 Special Access Service (Cont'd)

17.3.4 Voice Grade Service (Cont'd)

(C) Optional Features and Functions (Cont'd)

		Monthly Rate
(5)	Multiplexing Per arrangement Voice to Telegraph Grade	$217.29
(6)	Signaling Capability Per termination	$11.73
(7)	Selective Signaling Arrangement Per arrangement	$6.38
(8)	Transfer Arrangement (key activated* or Dial-Up**)	
	- Per four port arrangement including control channel termination***	$3.01
	- Per five port arrangement including control channel termination***	$6.85
(9)	Public Packet Switching Network (PPSN) Interface Arrangement Per arrangement	ICB

* The key activated control channel is rated as a Metallic Channel Termination and Channel Mileage, if applicable.

** The Dial-Up option requires the customer to purchase the Controller Arrangement from 13.3.8 preceding.

*** An additional Channel Termination charge will apply whenever a spare channel is configured as a leg to the customer designated premises. Additional channel mileage charges will also apply when the transfer arrangement is not located in the customer designated premises serving wire center.

APPROVED FOR FILING - THE PUBLIC SERVICE COMMISSION OF SOUTH CAROLINA - JULY 15, 2014

Rates and Charges

17.3 Special Access Service (Cont'd)

17.3.5 Program Audio Service

Regulations concerning Program Audio Service are set forth in 7.7 preceding. Rates are per Windstream South Carolina's Interstate Access Tariff.

17.3.6 Video Service

Regulations concerning Video Service are set forth in 7.8 preceding. Rates are per Windstream South Carolina's Interstate Access Tariff.

APPROVED FOR FILING - THE PUBLIC SERVICE COMMISSION OF SOUTH CAROLINA - JULY 15, 2014

Rates and Charges

17.3 Special Access Service (Cont'd)

17.3.7 Digital Data Service

Regulations concerning Digital Data Service set forth in 7.9 preceding	Monthly Rate	Nonrecurring Charge Initial	Nonrecurring Charge Additional
(A) Channel Termination Per termination			
- 2.4 kbps	$76.47	$221.00	$221.00
- 4.8 kbps	$76.47	$221.00	$221.00
- 9.6 kbps	$76.47	$221.00	$221.00
- 19.2 kbps	$76.47	$221.00	$221.00
- 56.0 kbps	$79.05	$221.00	$221.00
- 64.0 kbps	$79.05	$221.00	$221.00

(B) Channel Mileage

(1) Channel Mileage Facility, per mile

- 2.4 kbps	$2.54
- 4.8 kbps	$2.54
- 9.6 kbps	$2.54
- 19.2 kbps	$2.54
- 56.0 kbps	$5.08
- 64.0 kbps	$5.08

(2) Channel Mileage Termination, per Termination

- 2.4 kbps	$24.14
- 4.8 kbps	$24.14
- 9.6 kbps	$24.14
- 19.2 kbps	$24.14
- 56.0 kbps	$48.28
- 64.0 kbps	$48.28

APPROVED FOR FILING - THE PUBLIC SERVICE COMMISSION OF SOUTH CAROLINA - JULY 15, 2014

Rates and Charges

17.3 Special Access Service (Cont'd)

17.3.7 Digital Data Service (Cont'd)

(C) Optional Features and Functions

		Monthly Rate
(1)	Bridging Per port	$4.75
(2)	Loop Transfer Arrangement Per four port arrangement* Key activated** or Dial-Up***	$5.97
(3)	Public Packet Switching Network Interface Arrangement	
	- Per 9.6 kbps arrangement	ICB
	- Per 56.0 kbps arrangement	ICB

(D) Channel Service Unit Per Termination****

- 2.4 kbps	$25.90
- 4.8 kbps	$25.90
- 9.6 kbps	$32.10
- 56.0 kbps	$34.14

* An additional Channel Termination charge will apply whenever a spare channel is configured as a leg to the customer designated premises. Additional Channel Mileage charges will also apply when the transfer arrangement is not located in the customer designated premises serving wire center.
ICB Rates and Charges are filed in 17.3.9 following.

** The key activated control channel is rated as a Metallic Channel Termination and Channel Mileage, if applicable.

*** The Dial-Up option requires the customer to purchase the Controller Arrangement from 13.3.4 preceding.

**** Channel Service Units will only be provided under tariff if they existed in the Telephone Company's inventory as of November 18, 1983.

APPROVED FOR FILING - THE PUBLIC SERVICE COMMISSION OF SOUTH CAROLINA - JULY 15, 2014

Rates and Charges

17.3 Special Access Service (Cont'd)

17.3.8 High Capacity Service

Regulations concerning High Capacity Service are set forth 7.10 preceding.

	Monthly Rate	Nonrecurring Charge Initial	Nonrecurring Charge Additional
(A) Channel Term, per Termination			
- DS1 1.544 Mbps	$205.99	$429.00	$429.00
- DS1C 3.152 Mbps	ICB	ICB	ICB
- DS2 6.312 Mbps	ICB	ICB	ICB
- DS3 44.736 Mbps	ICB	ICB	ICB
- DS4 274.176 Mbps	ICB	ICB	ICB

(B) Channel Mileage

(1) Channel Mileage Facility, per mile

- 64 Kbps	$5.08
- 1.544 Mbps	$46.00
- 3.152 Mbps	ICB
- 6.312 Mbps	ICB
- 44.736 Mbps	ICB
- 274.176 Mbps	ICB

(2) Channel Mileage Term, per Termination

- 64 Kbps	$48.28
- 1.544 Mbps	$139.63
- 3.152 Mbps	ICB
- 6.312 Mbps	ICB
- 44.736 Mbps	ICB
- 274.176 Mbps	ICB

APPROVED FOR FILING - THE PUBLIC SERVICE COMMISSION OF SOUTH CAROLINA - JULY 15, 2014

Rates and Charges

17.3 Special Access Service (Cont'd)

17.3.8 High Capacity Service (Cont'd)

	Monthly Rate
(C) Optional Features and Functions	
(1) Multiplexing, per arrangement	
DS4 to DS1	ICB
DS3 to DS1	$608.37
DS1 to Voice**	$196.53
DS1 to DS0	$198.38
DS0 to Subrates --	
Up to 20 2.4 kbps services	$301.92
Up to 10 4.8 kbps services	$185.32
Up to 5 9.6 kbps services	$161.92
(2) Automatic Loop Transfer	$389.24
(3) Transfer Arrangement* (per 4 port)	$165.42

17.3.9 Individual Case Basis

* An additional Channel Termination charge will apply whenever the spare line is provided as a leg to the customer designated premises.

** A channel of this DS1 to the Hub can be used for Digital Data service. ICB rates and charges are filed in 17.3.9 following.

APPROVED FOR FILING - THE PUBLIC SERVICE COMMISSION OF SOUTH CAROLINA - JULY 15, 2014

Rates and Charges

17.4 Other Services

17.4.1 Access Ordering

	Charge
(A) Access Order Charge	
Per Special Access Order	$104.00
Per Switched Access Rearrangement Order	$92.00
(B) Service Date Change Charge	
A service Date Change Charge will apply, on a per order per occurrence basis, for each service date changed. The Access Order Charge as specified in 17.4.1(A) preceding does not apply. The applicable charge is:	
Service Date Change Charge, per order	$40.00
(C) Design Change Charge	
The Design Change Charge will apply on a per order per occurrence basis, for each order requiring design change. The applicable charge is:	
Design Change Charge, per order	$40.00
(D) Miscellaneous Service Order Charge	
Per Occurrence	$40.00

APPROVED FOR FILING - THE PUBLIC SERVICE COMMISSION OF SOUTH CAROLINA - JULY 15, 2014

Rates and Charges

17.4 Other Services (Cont'd)

17.4.2 Additional Engineering

		Each Half Hour or Fraction Thereof
(A)	Basic Time per engineer normally scheduled working hours	$16.97
(B)	Overtime per engineer outside of normally scheduled working hours	$25.46
(C)	Premium Time outside of scheduled work day, per engineer	$33.95

APPROVED FOR FILING - THE PUBLIC SERVICE COMMISSION OF SOUTH CAROLINA - JULY 15, 2014

Rates and Charges

17.4 Other Services (Cont'd)

17.4.3 Additional Labor

	Each Half Hour or Fraction Thereof
(A) Installation or Repair	
- Overtime, outside of normally scheduled working hours on a scheduled work day, per technician	$23.71*
- Premium Time, outside of scheduled work day, per technician	$31.62*
(B) Stand by	
- Basic time, normally scheduled working hours, per technician	$16.20
- Overtime, outside of normally scheduled working hours on a scheduled work day, per technician	$24.30*
- Premium Time, outside of scheduled work day, per technician	$32.40*
(C) Testing and Maintenance with other Telephone Companies, or Other Labor	
- Basic Time per technician normally scheduled working hours	$17.01
- Overtime per technician outside of normally scheduled working hours on a scheduled work day,	$25.51*
- Premium Time per technician outside of scheduled work day	$34.02

* A call out of a Telephone Company employee at a time not consecutive with the employee's scheduled work period is subject to a minimum charge of four hours.

APPROVED FOR FILING - THE PUBLIC SERVICE COMMISSION OF SOUTH CAROLINA - JULY 15, 2014

Rates and Charges

17.4 Other Services (Cont'd)

17.4.4 Miscellaneous Services

(A) Additional Cooperative Acceptance Testing - Switched Access

Testing Periods	Each Half Hour or Fraction Thereof
Basic Time, Overtime* and Premium Time*	See the rates for Additional Labor as set forth in 17.4.3 (C) preceding.

(B) Additional Automatic Testing - Switched Access

To First Point of Switching

Additional Tests

	Per Test Per Transmission Path
Gain-Slope Tests	$2.89
C-Notched Noise Tests	$2.89
1004 Hz Loss**	$2.89
C-Message Noise**	$2.89
Balance (return loss)**	$2.89

* A call out of a Telephone Company employee at a time not consecutive with the employee's scheduled work period is subject to a minimum charge of four hours.

** 1004 Hz Loss, C-Message Noise and Balance are non-chargeable routine tests, however, they may be requested on an as needed or more than routine scheduled basis, in which case the charges herein apply.

APPROVED FOR FILING - THE PUBLIC SERVICE COMMISSION OF SOUTH CAROLINA - JULY 15, 2014

Rates and Charges

17.4 Other Services (Cont'd)

17.4.4 Miscellaneous Services (Cont'd)

(C) Additional Manual Testing - Switched Access

To First Point of Switching	
Additional Tests	Each Half Hour or Fraction Thereof
Gain-Slope, C-Notched Noise and any other agreed to tests, per technician	See the rates for Additional Labor as set forth in 17.4.3(C) preceding

(D) Additional Cooperative Acceptance Testing - Special Access

	Each Half Hour or Fraction Thereof
Testing Periods	
Basic Time, Overtime* and Premium Time*	See the rates for Additional Labor as set forth in 17.4.3(C) preceding.

* A call out of a Telephone Company employee at a time not consecutive with the employee's scheduled work period is subject to a minimum charge of four hours.

APPROVED FOR FILING - THE PUBLIC SERVICE COMMISSION OF SOUTH CAROLINA - JULY 15, 2014

Rates and Charges

17.4 Other Services (Cont'd)

17.4.4 Miscellaneous Services (Cont'd)

(E) Additional Manual Testing - Special Access

Testing Periods	Each Half Hour or Fraction Thereof
Basic Time, Overtime* and Premium Time*	See the rates for Additional Labor as set forth in 17.4.3(C) preceding.

(F) Maintenance of Service

Testing Periods	Each Half Hour or Fraction Thereof
Basic Time, Overtime* and Premium Time*	See the rates for Additional Labor as set forth in 17.4.3(C) preceding.

* A call out of a Telephone Company employee at a time not consecutive with the employee's scheduled work period is subject to a minimum charge of four hours.

APPROVED FOR FILING - THE PUBLIC SERVICE COMMISSION OF SOUTH CAROLINA - JULY 15, 2014

Rates and Charges

17.4 Other Services (Cont'd)

17.4.4 Miscellaneous Services (Cont'd)

(G) Telecommunications Service Priority

	Nonrecurring Charge
Per service arranged	-

(H) Controller Arrangement

	Monthly Rate
Per Arrangement	$100.00

(I) Presubscription

	Nonrecurring Charge
(1) InterLATA - per Telephone Exchange Service line or trunk*	$5.00
(2) IntraLATA - per Telephone Exchange Service line or trunk*	$5.00
(3) Equal Access Cost Recovery - per Originating Intrastate Switched Access Minute of Use	To Be Determined

(J) Provision of Access Services Billing Information

Regulations concerning Access Services Billing are set forth in 13.10 preceding.

(1) Secondary Bill

	Monthly Rate
Standard Paper(per page)	$0.03
Magnetic Tape(per tape)	$39.50
Data Transmission(per transmission)	$20.25

(2) Additional Copies

	Non Recurring Charge
Standard Paper(per page)	$0.06
Magnetic Tape(per tape)	$48.00
Data Transmission(per transmission)	$28.00

- This charge is generally billed to the end user who is the subscriber to the Telephone Exchange Service. In those instances where the IC both requests the presubscription change, and requests the associated charge be billed to it, the Telephone Company will bill the IC. In the event an end user is incorrectly presubscribed due to misassignment on the part of the Telephone Company, no charge shall apply. In the event an end user is incorrectly presubscribed due to misassignment on the part of the IC, and the IC is unable to document such an assignment, the Telephone Company will apply the charge to the IC responsible for the misassignment of the end user and assign the end user to an IC of the end user's choice.

APPROVED FOR FILING - THE PUBLIC SERVICE COMMISSION OF SOUTH CAROLINA - JULY 15, 2014

Rates and Charges

17.4 Other Services (Cont'd)

17.4.4 Miscellaneous Services (Cont'd)

(K) Blocking Service*

	Nonrecurring Charge
- Per exchange service line. or trunk and/or per Feature Group A Switched Access Line	-

(L) Billing Name and Address Service

- Per BNA Record	ICB

(M) Unauthorized PIC Change

- Residence/Business Per Telephone Exchange Service Line or Trunk	$35.65
- Public and/or Semi-Public Pay Telephone per Telephone Exchange Service Line or Trunk	$57.57

* Blocking access to 900 Service is offered to all subscribers at no charge at the time telephone service is established at a new number and for 60 days thereafter.

APPROVED FOR FILING - THE PUBLIC SERVICE COMMISSION OF SOUTH CAROLINA - JULY 15, 2014

Rates and Charges

17.4 Other Services (Cont'd)

17.4.5 Reserved For Future Use

APPROVED FOR FILING - THE PUBLIC SERVICE COMMISSION OF SOUTH CAROLINA - JULY 15, 2014

Rates and Charges

17.4 Other Services (Cont'd)

17.4.6 Special Facilities Routing of Access Services

(A) Diversity

For each service provided in accordance with 11.1.1 preceding, the rates and charges will be developed on an individual case basis.

(Reserved for future use.)

(B) Avoidance

For each service provided in accordance with 11.1.2 preceding, the rates and charges will be developed on an individual case basis.

(Reserved for future use.)

(C) Diversity and Avoidance Combined

For each service provided in accordance with 11.1.1 and 11.1.2 preceding, combined, the rates and charges will be developed on an individual case basis.

(Reserved for future use.)

(D) Cable-Only Facilities

For each service provided in accordance with 11.1.4 preceding, the rates and charges will be developed on an individual case basis.

(Reserved for future use.)

APPROVED FOR FILING - THE PUBLIC SERVICE COMMISSION OF SOUTH CAROLINA - JULY 15, 2014

Rates and Charges

17.4 Other Services (Cont'd)

17.4.7 Specialized Service or Arrangements

Specialized Service or Arrangements are provided on an individual case basis as set forth following:

(Reserved for future use.)

APPROVED FOR FILING - THE PUBLIC SERVICE COMMISSION OF SOUTH CAROLINA - JULY 15, 2014